Superior Clamping and Gripping

SCHUNK Grippers

The world's most proven
Grippers on the Market

SCHUNK Grippers

The world's most proven
Grippers on the Market

SCHUNK GmbH & Co. KG
Spann- und Greiftechnik

Bahnhofstr. 106 – 134
D-74348 Lauffen/Neckar
Tel. +49-7133-103-2503
Fax +49-7133-103-2189

grippingsystems@de.schunk.com
www.schunk.com

www.youtube.com/SCHUNKHQ
www.twitter.com/SCHUNK_HQ
www.facebook.com/SCHUNK.HQ

Superior Clamping and Gripping

Jens Lehmann stands for precise gripping, and safe holding. As a brand ambassador of the SCHUNK team, the No. 1 goalkeeper represents our global competence leadership for clamping technology and gripping systems. The top performance of SCHUNK and Jens Lehmann are characterized by dynamics, precision, and reliability.

For more information visit our website:
www.gb.schunk.com/Lehmann

Jens Lehmann

Henrik A. Schunk, Kristina I. Schunk, brand ambassador Jens Lehmann, and Heinz-Dieter Schunk

Top Performance in the Team

SCHUNK is the world's No. 1 for clamping technology and gripping systems – from the smallest parallel gripper to the largest chuck jaw program.

In order to boost efficiency, SCHUNK customers have bought more than 2,000,000 precision toolholders, 1,000,000 SCHUNK grippers, and 100,000 lathe chucks and stationary workholding systems so far.

This makes us proud and motivates us to attain new top performances.

As a competence leader, we recognize and develop standards with a large potential for the future, which will drive the rapid progress in many industries.

Our customers profit from the expert knowledge, the experience, and the team spirit of more than 2,500 employees in our innovative family-owned company.

The Schunk family wishes you improved end results with our quality products.

Heinz-Dieter Schunk Henrik A. Schunk Kristina I. Schunk

Superior Clamping and Gripping

It's time to use your machine's

With superior components, find potentials in your machine where you would least expect to find them.

Make full use of your machine's potential – with the extensive product portfolio from SCHUNK.

SCHUNK, the competence leader for clamping technology and gripping systems, can now open up the full potential of your processing machines and production processes. Reduce costs by combining accurate, flexible workpiece machining with dynamic production automation.

SCHUNK Synergy – when everything fits together.

With SCHUNK Synergy, you benefit from superior components from our innovative family-owned company and the result of a perfectly harmonized interplay of clamping technology and gripping systems. The more SCHUNK, the more efficient it is.

SCHUNK®

full potential!

"Clamping technology and gripping systems – the perfectly adjusted interplay makes you a champion in terms of productivity. We call it SCHUNK Synergy.

Let's have a look where the potentials in your machines are hidden."

Jens Lehmann

SCHUNK No. 1 Products for higher Productivity ...

Discover new potential now:

www.gb.schunk.com/machine-potential

And order the SCHUNK Synergy poster by telephone +49-7133-103-2256

... in your Automated Handling System

up to 20 tons load handling

MAGNOS **magnetic lifting technology**

... in your Lathe

... in your Lathe

60 seconds jaw change

Lathe chucks ROTA-S plus 2.0 and ROTA THW plus

300% better surface quality

TIENDOTURN – innovative **hydraulic expansion toolholders,** for lathes and turning/milling centers

1,200 standard chuck jaws

The world's largest **chuck jaw program** for every chuck type

... in your Automated Handling System

No. 1 unique
PGN-plus-P, Generation Permanent, the only gripper with multi-tooth guidance and permanent lubrication

more than 500 standard combinations
for **line and room gantries** from the modular system

100% cycle increase
Universal rotary module SRU-plus 20-S, the new benchmark in top performance

90% faster gripper change
SWS quick-change system – fully automatic gripper change within seconds

... for your Automated Machine Loading

... for your Automated Machine Loading

300 kg load capacity
NSR robot coupling
for pallet handling – space-saving and extremely flexible

100% control
TANDEM KSP plus clamping force block with jaw monitoring

30% more productivity
Automated machine loading with **PGN-plus-P, Generation Permanent** SCHUNK gripper with **GSW spindle interface**

... in your Machining Center

90% less set-up costs
with **VERO-S**, due to set-up during processing time

20 mm height
VERO-S NSE *mini* – the pneumatic **quick-change pallet system** in a very flat design

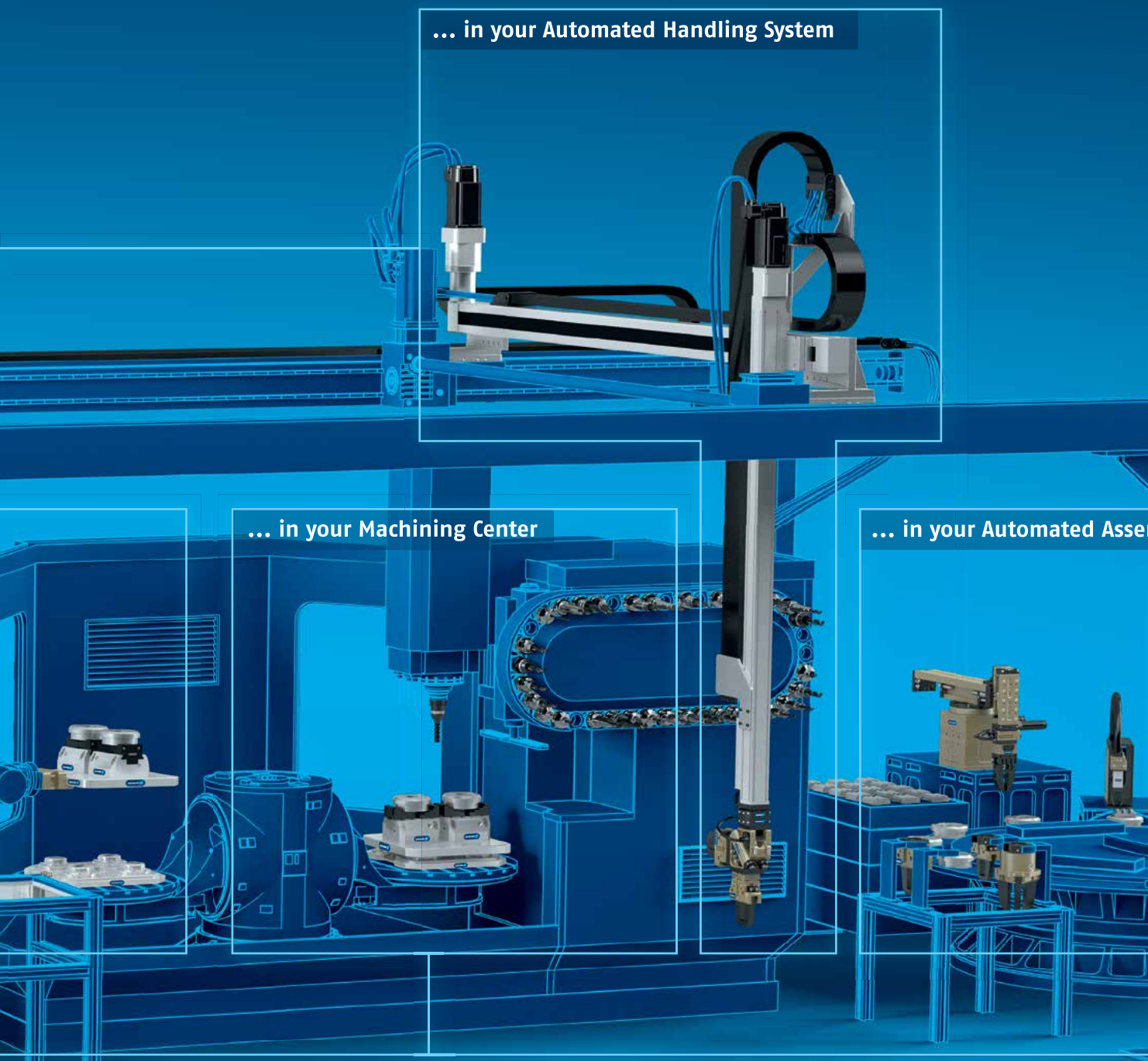

75,000 customized solutions

Hydraulic expansion technology for tool or workpiece clamping

0.3 mm shank diameter

TRIBOS mini sets a benchmark in micro machining

100% encapsulated

KONTEC KSK centric clamping vise fully functional in harsh environments

less than **3** µ run-out accuracy

TRIBOS-SVL super-slim tool extension optimized interfering contours

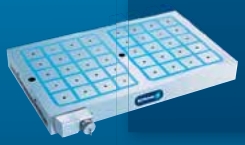

5 -sided workpiece machining

in one set-up – **MAGNOS magnetic clamping technology**

up to **85,000** rpm

TRIBOS-S predestined for high-speed cutting

... in your Automated Assembly

∞ combination options
SCHUNK modular assembly system

180% better gripping force – mass ratio
EGP – The powerful electronic **gripper for small components** with integrated electronics

25% greater gripping force
MPG-plus – The most powerful pneumatic **miniature gripper** in the market

110 picks per minute
PPU-E – The fastest pick & place unit in the market, **PPU-P** with 90 picks/min

... in your Service Robotics Application

Future handling

6 degrees of freedom
Powerball lightweight arm LWA 4P
The lightweight arm with the world's most compact performance. Used on mobile platforms

less than 3 µ run-out accuracy
TRIBOS-R with unique patented **polygonal clamping technology**

100% suitable for all SCHUNK toolholders
TENDO-SVL tool extension – optimized interfering contours and super-slim

up to 80 bar coolant-proof or peripheral coolant
Versatile clamping range with **GZB-S intermediate sleeves**

more than 35 years of experience in **TENDO hydraulic expansion technology.** TENDO, the original. With 29 interfaces, versatile, with 3 µ run-out accuracy

2,000 Nm torque with Ø 32 mm
TENDO E compact for large volume cutting, boring, reaming, and threads

0 µ permanent run-out accuracy
TENDO zero, perfect vibration damping, resulting in up to 50% longer service life

SCHUNK End-of-Arm-Competence. From the standard Component to the standard Gripping System.

SCHUNK components and gripping systems are setting standards in automation in every industry worldwide. Our spectrum of robot accessories includes a unique and extensive line of standard modules for the mechanical, sensor and power connections of handling devices and robots.

The world's most comprehensive assortment of robust and long-lasting small components and universal grippers is distinguished by utmost product quality, precision, and versatile monitoring capabilities.

Take Advantage of the SCHUNK Modular System with more than 4,000 standard Components.

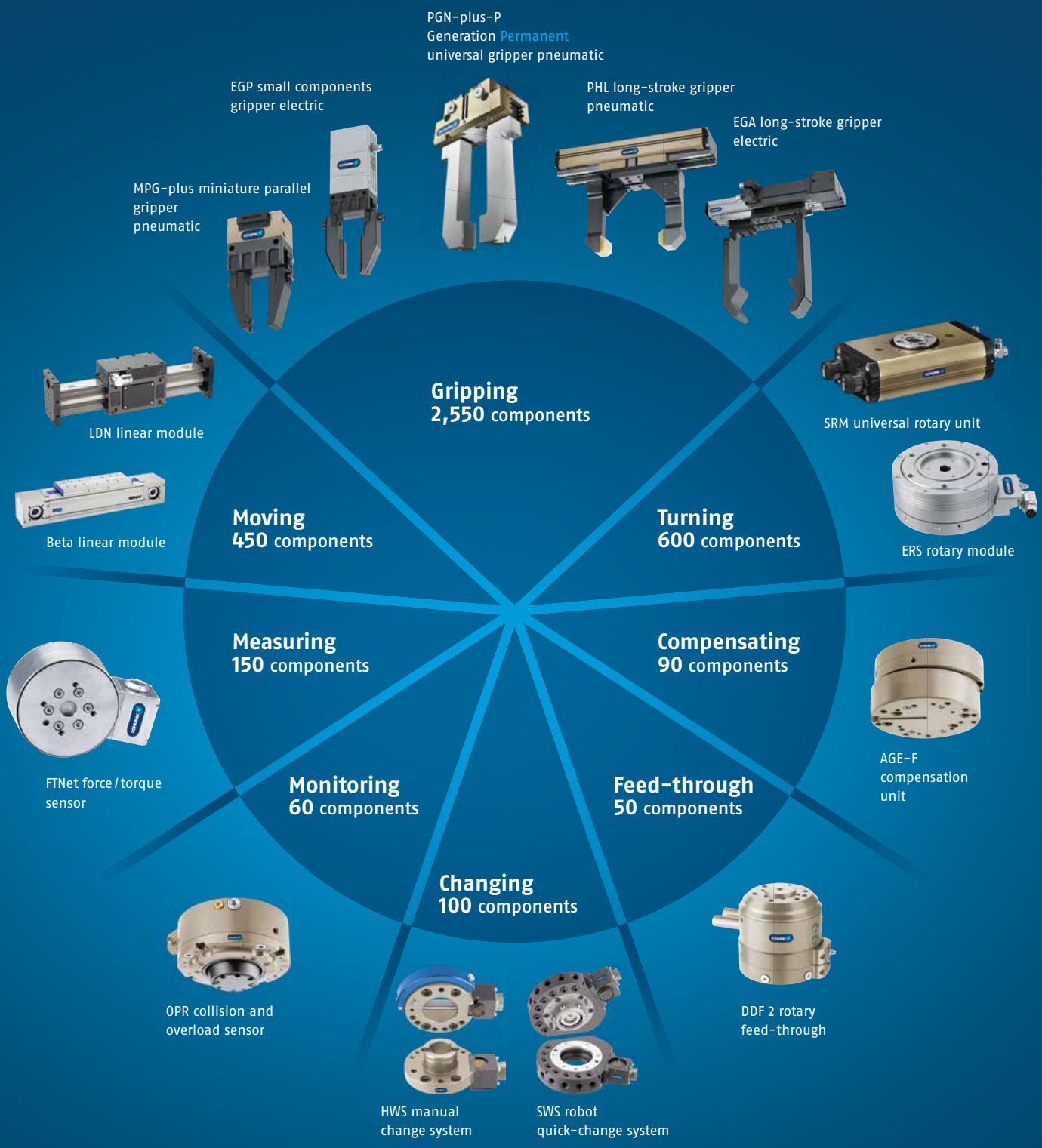

SCHUNK Gripping Systems

From the standard Component to the customized Gripping System

More than 30 years of gripping competence is the basis for the world's largest standardized gripping technology product range with more than 4,000 components and for an average of 2,000 standard and customized gripping systems per year.

Components

Standard Components

SCHUNK Grippers

Rotary Modules

Linear Modules

Robot Accessories

Pick & Place Units

Gripping Hands

Lightweight Arms

Customized Components

From standard components further developed in accordance with customer requirements to exclusive customized new developments.

Examples:

Wafer Grippers

made of laser-forming material with SCHUNK LGP gripper

Compact Vises

for sheet metal machining, pneumatically actuated

Packaging Grippers

High-speed grippers according to legal, hygienic, and production specifications

Gripping Systems

Standard Gripping Systems

Modular Assembly Automation

Line and Room Gantries

Solution composed of several SCHUNK standard components for robots and gantries

Customized Gripping Systems

Solution composed of several SCHUNK components, of which at least one is further developed or newly developed specifically for the customer.

Examples:

Connecting Rod Handling

Aluminum Foil Handling

Modular and Mobile Gripping Systems

From the standard Component to the customized Gripping System

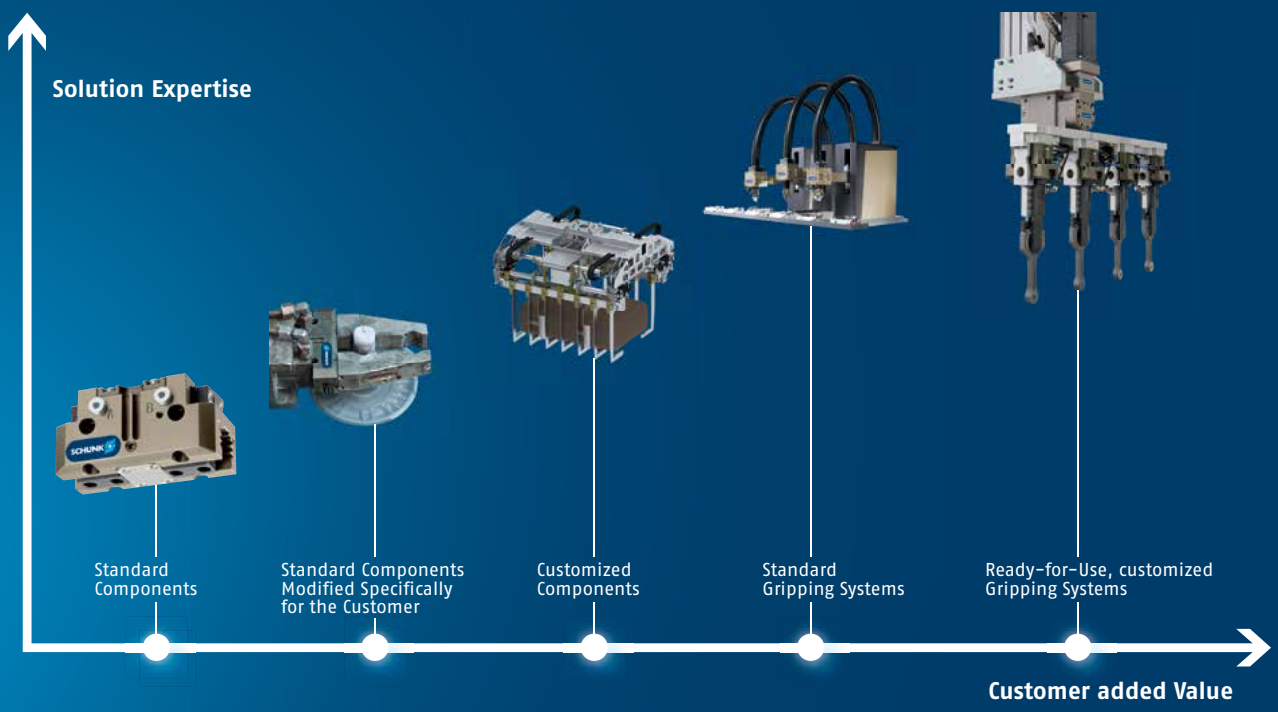

Just 1 Expert Contact Person for a Solution from one Source

For smooth communications, a personal contact person is available to you from the start of the project until completion. Your contact person is the interface between you and the individuals involved in the project and ensures that information is exchanged smoothly.

From planning to continued support after the conclusion of the project, SCHUNK guarantees that your project will be handled cooperatively and efficiently.

Your Advantage

- Over 30 years of experience in gripping technology
- Over 12,000 implemented gripping systems for a wide range of industries
- Modular design with perfectly coordinated standard components
- Compete accuracy of fit due to standardized interfaces
- Shorter project lead times due to standardized systems
- Reliable implementation processes and planning security without extra project costs
- Functional assemblies fitted on request or ready for use
- Time savings due to the perfect solution from a single source

All inclusive!

SCHUNK customized Gripping Systems. Take Advantage of our Experience.

More than **12,000** implemented solutions speak for themselves.

Consistent and comprehensive project management is an important part of the SCHUNK philosophy.
Our approach is systematic and individually adapted to your project; each step is traceable and documented.

The analysis of complex processes and the comprehensive analysis of parts and products of our customers leads SCHUNK to develop effective and customized gripping systems.
The visualization of automated processes requires maximum precision – we use state-of-the art technology for 2D and 3D visualizations and 3D simulations. Our components and configurations contain decisive performance potential for the cost effectiveness of your process chain. We exhaust this potential.
Entirely for your benefit.

Consulting → **Project planning** → **Engineering** → **Implementation** → **Service**

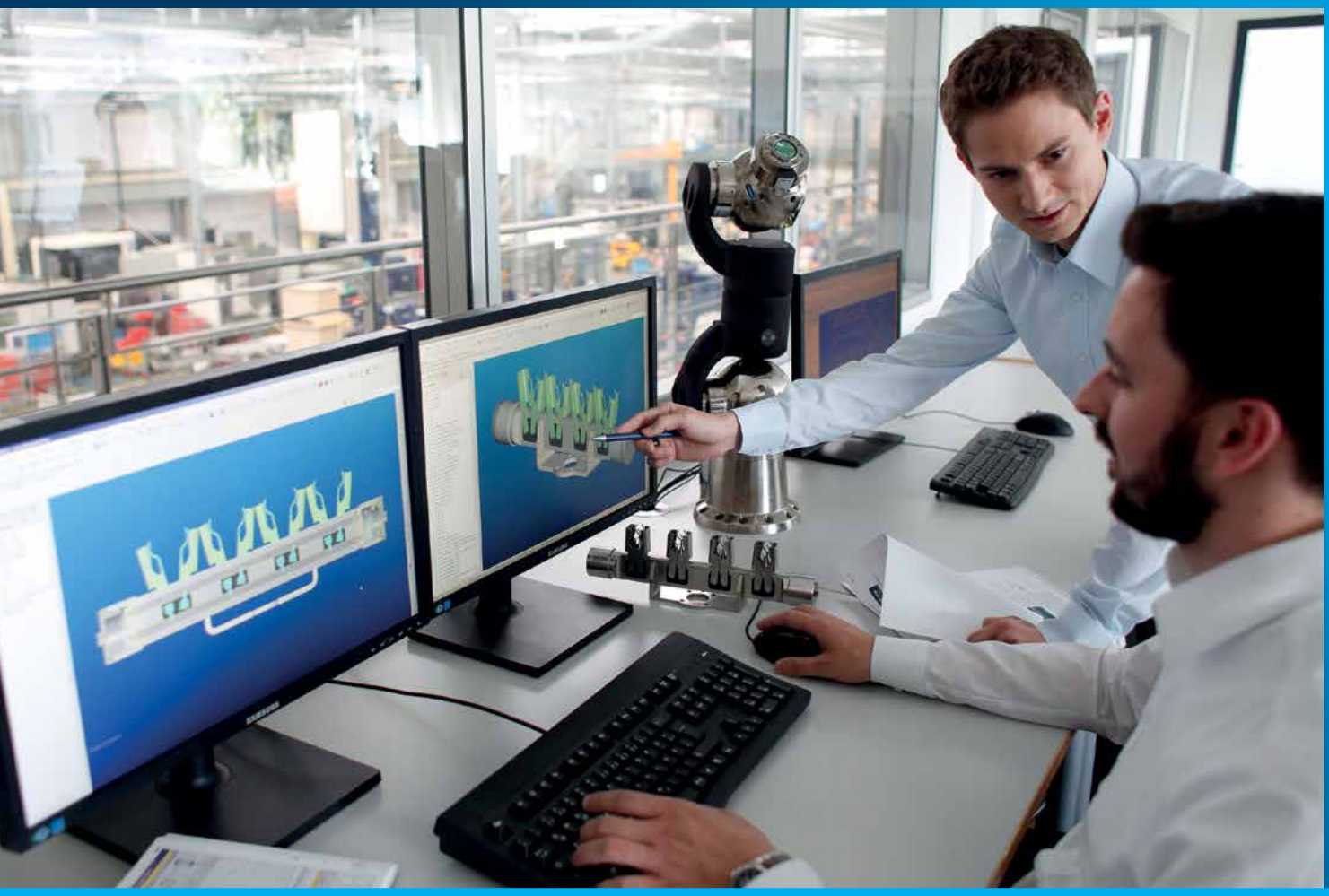

Positioning of round parts made of steel.

Task
Small turned parts must be placed quickly at alternating positions.

SCHUNK solution
Modular SCHUNK 4-axis gantry with servo-electric linear axes of type LDN and LDK in combination with the SCHUNK PGN-plus pneumatic 2-finger universal gripper.

SCHUNK products

LDN
Linear module

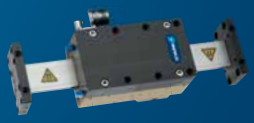

LDK
Linear module

PGN-plus
Universal gripper

Handling of aluminum die-cast parts.

Task
Handling of die-cast parts in a hot environment. Removal from the mold and inspection. Immersion in a cooling basin and stamping or embossing of the serial number.

SCHUNK solution
Use of a modified SCHUNK PGN-plus 2-finger universal gripper and a SCHUNK PZN-plus 3-finger centric gripper with protective cover and in corrosion-protected version as well as with heat-resistant cables and seals. Operation of the grippers with sealed air prevents penetration of dirt and moisture, which could accumulate in the guides.

SCHUNK products

PGN-plus
Universal gripper

PZN-plus
Centric gripper

SCHUNK Grippers.
Versatile for every Application.

For every task. For every industry.

SCHUNK customers benefit from more than 30 years of industry and solution competence, the most comprehensive line of gripper products worldwide and our extensive experience in different handling tasks.

Your advantage

- The world's largest modular system worldwide with optimally compatible standard components
- An absolutely exact fit due to standard interfaces
- Shorter project cycle times due to standardized systems
- Reliable process implementation and planning security without additional project costs
- Functional assemblies mounted or ready for use on request
- Time savings due to a perfect solution from a single source

Handling during loading of a machining center

Machining industry

A SCHUNK MGP-plus pneumatic miniature parallel gripper receives the workpieces from a SCHUNK PGN-plus pneumatic 2-finger parallel gripper for further handling tasks in a machining center.

Robot-guided joining and assembly of heavy and large workpieces

Automotive

A SCHUNK gripping system consisting of the OPR anti-collision and overload protection, a SCHUNK SWS pneumatic quick-change system and a SCHUNK PGN-plus pneumatic 2-finger parallel gripper is used to grip the upper half of the motor block. The lower half of the motor block is placed on a SCHUNK AGE-S-XYZ compensation unit.

Removal of pistons

Casting industry

A SCHUNK PGN-plus universal gripper was mounted on the robot arm in combination with the OPR anti-collision sensor. The image capture software determines potential gripping points and the PGN-plus removes the piston.

Palletizing of cases of mineral water

Packaging industry

A robot with a SCHUNK LEG electric long-stroke gripper places cases of mineral water on pallets. The SCHUNK LEG, with its modular servo-electric drive concept, is compatible with all robot controllers.

Population and mounting of electronic components

Electronics industry

A SCHUNK EGP electric small components gripper used in electrical assembly ensures high-speed positioning and turning of electronic components between different rotary tables and pallets.

Separation of parts

Machining industry

Two SCHUNK LWA 4P electric lightweight arms perform the handling of components and product transport. For bin picking they are equipped with SCHUNK PG-plus 70 electric 2-finger parallel grippers.

SCHUNK

A class of its own. The new SCHUNK PGN-plus-P Generation Permanent Universal Gripper. Now with permanent lubrication.

The new SCHUNK PGN-plus-P Generation Permanent universal gripper with its unique permanent lubrication combines SCHUNK gripping technology, proven 100,000 times over, with innovative lubrication technology. It is based on the most-purchased and leading product on the market – the SCHUNK PGN-plus with multi-tooth guidance. Technological perfection and unprecedented precision as a result of the multi-tooth guidance the SCHUNK PGN-plus defines the benchmark for pneumatic universal grippers. Never has a gripper been more precise than with the superior SCHUNK multi-tooth guidance. Now SCHUNK has supplemented the multi-tooth guide contour with lubricant pockets throughout. They ensure a permanent supply of lubricant as well as fast and even formation of a lubricant film, also in the case of short strokes.

With the new PGN-plus-P Generation Permanent SCHUNK has optimized the benchmark for pneumatic universal grippers and made its time-proven technology even better.

The effect: Permanent lubrication increases the already long life of this high-performance gripper from SCHUNK and makes it virtually maintenance-free.

Your advantages with the new SCHUNK PGN-plus-P Generation Permanent

- Fast and even distribution of lubricant, also in the case of short strokes
- Reduced operating costs (TCO)
- More performance, permanently
- More compact, efficient systems
- Permanently reliable and robust

Patentierte Präzision!
Patented Precision!
Vielzahnführung
Multi-tooth guidance

For more information on the SCHUNK PGN-plus-P Generation Permanent please visit:

SCHUNK

SCHUNK Grippers
Proven since 1983.

SCHUNK offers the world's most comprehensive line of gripper products. Standard gripping modules, ready-to-install gripping system assemblies and an extremely broad spectrum of special gripping systems – for your handling and assembly, automation and robot requirements. You benefit from our 30 years of gripping and solution competence.

Universal.

The SCHUNK PGN-plus pneumatic gripper
Page 280

More than **2,500** standard grippers

More than **12,000** gripping system solutions implemented

In use worldwide in more than **1,000,000** applications

Heavy duty.

The SCHUNK PZN-plus
pneumatic gripper
Page 762

Miniature.

The SCHUNK MPG-plus
pneumatic gripper
Page 54
and the SCHUNK EGP
electric gripper
Page 1382

Long stroke.

The SCHUNK EGA
electric gripper
Page 1502

Intelligent.

The SCHUNK EGL
electric gripper

Diversity in Perfection.

You have the requirement, we have the gripper for every handling task. Whether pneumatic or electric – SCHUNK stands for efficiency and precision in handling. We offer the perfect gripper for every type of application, with unprecedented flexibility.

Choose from a broad spectrum of high-quality accessory components, which SCHUNK provides for its grippers. This will allow you to perfectly equip your SCHUNK gripper for your individual application. Combine different options, without compromises.

We also have the right solution for special environmental conditions such as temperature, contamination or aggressive media, and even for cleanrooms or explosive environments.

SCHUNK®

SCHUNK Grippers.
The Plus is in the Technology.

Power, precision and diversity – pneumatic and electric.

The patented SCHUNK multi-tooth guidance ensures maximum gripping forces, for **high maximum moments and forces** and for **precise handling and reliable processes.**

Up to 30% longer gripper fingers – due to higher maximum moments

Multi-tooth guidance allows the use of longer gripper fingers while retaining the same gripper size, without overloading the guides.

Maximum force

SCHUNK grippers with multi-tooth guidance achieve the maximum force in the existing, compact installation space. Due to the maximum area of the oval piston in the case of a pneumatic drive, and due to the spindle nut in the case of an electric drive. This optimizes the utilization of force in relation to the gripper size.

PGN-plus pneumatic 2-finger parallel gripper

EGN electric 2-finger parallel gripper

Maximum process reliability

Multi-tooth guidance allows a larger wedge hook surface and therefore lower surface pressure for low-wear transmission of forces to the base jaw for a reliable process.

Higher load bearing capacity – due to multiple guide surfaces

According to the principle of the patented SCHUNK multi-tooth guidance the surface pressure is reduced by distributing the load onto several parallel prismatic guides.

For every requirement

Reliable special versions offer the right pneumatic or electric gripper for every type of application. Also for special environmental conditions such as temperature, contamination or aggressive media, and even for cleanrooms or explosive environments.

Dust-protected version

For use in dusty environments. Completely dust-proof versions with increased protection against penetrating substances for absolute reliability.

Cleanroom

As a standard feature, SCHUNK premium products are certified according to EN ISO 14644 cleanroom class ISO 5, with HUE protective cover also for use in ISO 2 cleanrooms.

Explosion-protection version EX

All premium products from SCHUNK are also delivered with the ATEX certificate as standard.

Customized protective covers

For use in high-temperature areas such as welding environments.

Diverse accessories

SCHUNK provides a broad spectrum of high-quality accessory components for its grippers. Of course, this spectrum includes the right sensors as well as efficient micro valve technology for shorter cycle times and lower energy consumption.

Perfectly coordinated accessories

e.g. ABV micro valves
Shorter cycle times and lower pneumatic energy consumption.

Sensor systems | Position monitoring

e.g. MMS magnetic switch
Features one switching point.
No interfering contour.

Sensor systems | Multi-position monitoring

e.g. MMS 22-PI magnetic switch
With adjustable hysteresis.
Two programmable switching points to choose from.

Jaw accessories

e.g. BSWS jaw quick-change system

Minimizes set-up times due to fast changing of the gripper fingers.

SCHUNK eGRIP Finger Designer
Gripper Fingers at the Press of a Button.

Design and order in 15 minutes.

SCHUNK PGN-plus
pneumatic gripper

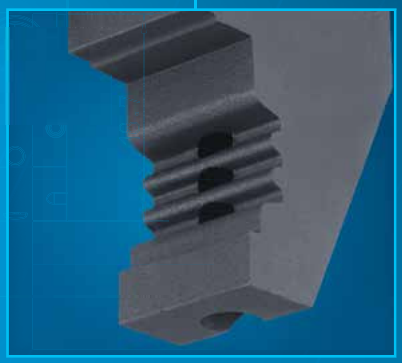

SCHUNK eGRIP is the **first fully automatic web-based 3D design tool for additively manufactured gripper fingers.** The **license-free, browser-based web tool** drastically reduces **the design and order time** for customized gripper fingers.

Your advantages with the SCHUNK eGRIP finger designer

- ✔ Delivery in **1 week**
- ✔ **100%** custom-fit
- ✔ **50%** lower costs for gripper fingers

www.schunk.com/egrip/en

Example in everyday use.

With **SCHUNK eGRIP** you can also easily implement **form-fit finger geometries** that would be very difficult or impossible to achieve with machining processes.

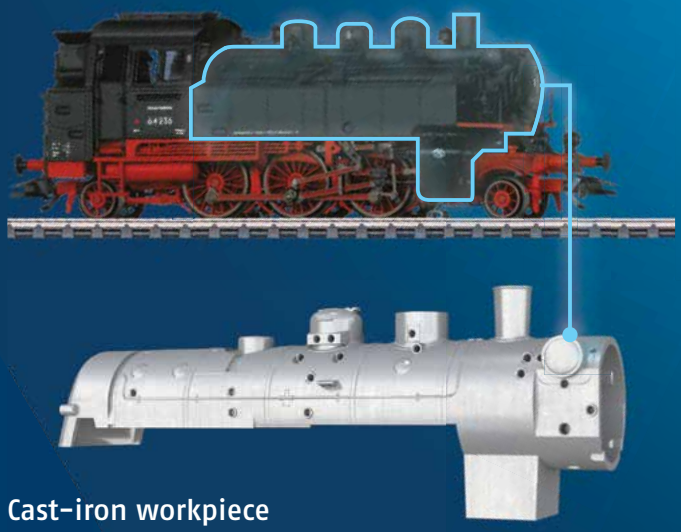

Cast-iron workpiece

Boiler for a model railroad locomotive

✓ Upload a part

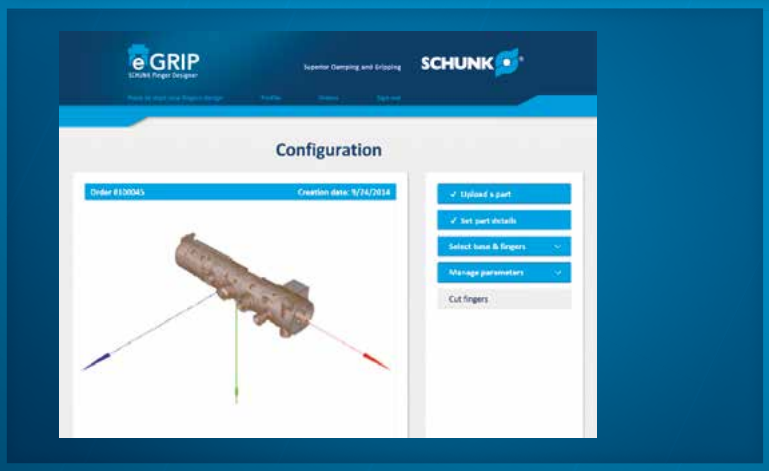

Simply upload the **STEP** or **STL file** for the **workpiece.** Supplement with **specific data,** such as the **weight,** the **installation position of the gripper** or the **finger length.**

SCHUNK MPG-plus
pneumatic gripper

SCHUNK EGP
electric gripper

SCHUNK PGN-plus
pneumatic gripper

Online design and
webshop order in
15 minutes

Delivery in
1 week

SCHUNK eGRIP creates individual gripper fingers with the **optimal 3D contour** and a detailed offer including the **price and delivery time.**

With SCHUNK eGRIP you receive custom SCHUNK gripper fingers fast.

SCHUNK Grippers

The most time-proven grippers on the market worldwide

Our line of gripping systems, which includes standard grippers, ready-to-install gripping system assemblies and an extremely broad range of custom gripping system solutions, is the most comprehensive of its kind. SCHUNK grippers are characterized by maximum product quality, precision and diverse monitoring capabilities and have been setting standards worldwide for more than 30 years in automation systems in all industries. The optimally graduated series covers the entire spectrum of workpiece sizes. A prerequisite for this state-of-the-art technology, which is "Made in Germany", is our never-ending innovative potential. SCHUNK offers more. More willingness to accept challenges and to implement ideas, more commitment to invest in innovative technologies, more flexibility to solve the problems of a rapidly developing future.

Strong arguments for SCHUNK grippers:

- High gripping forces
- Large stroke ranges for size of module
- Extremely easy commissioning
- High payload
- Powerful kinematics for maximum service life
- Economical solutions and short delivery times due to modular design
- Pneumatic or electric

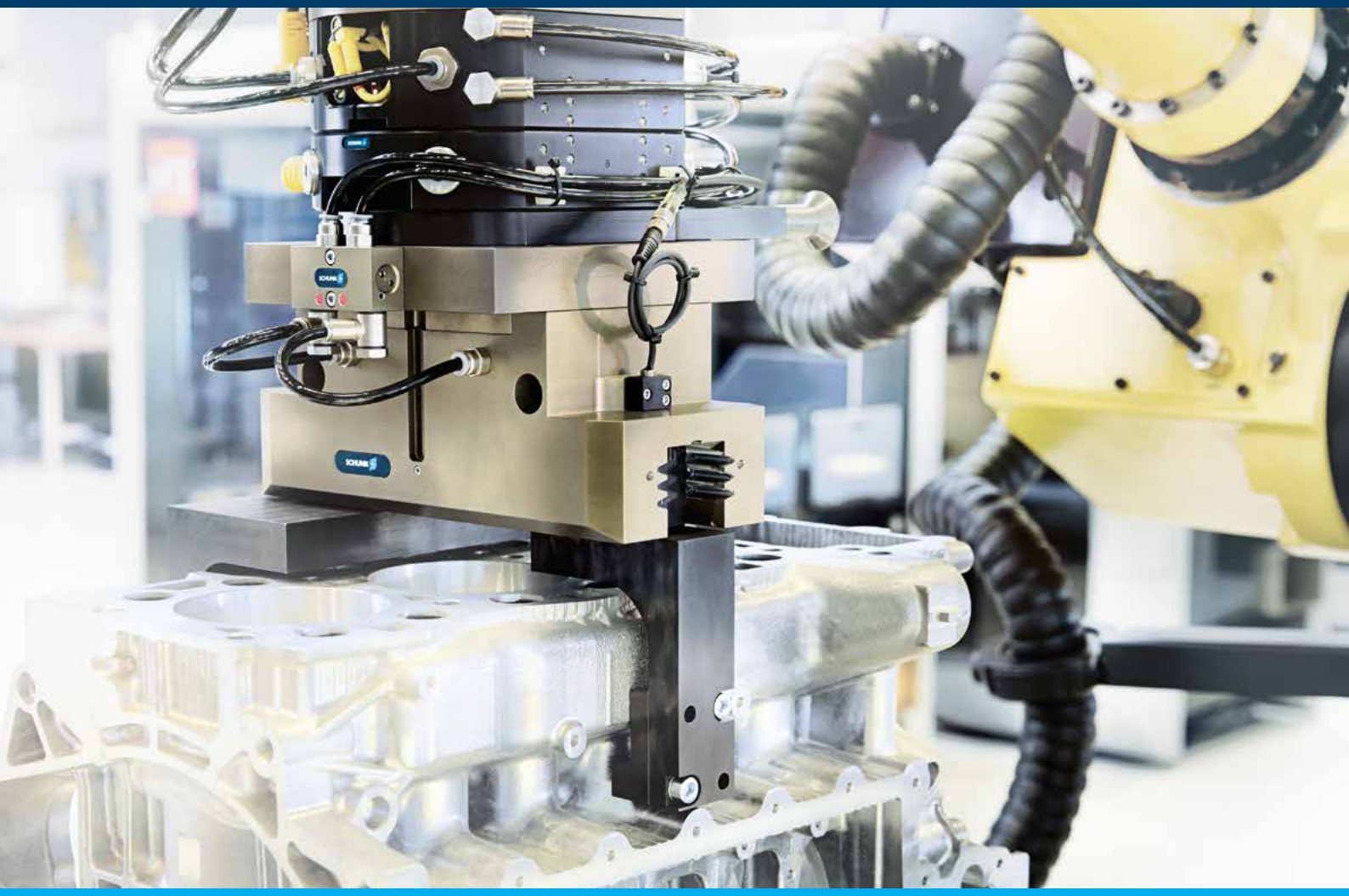

Contents

	Page
Product Overview	30
SCHUNK pneumatic Grippers	48
2-Finger Parallel Grippers	48
3-Finger Centric Grippers	714
3-Finger Centric Grippers with Rotating Jaw Stroke	1068
Multi-finger Centric Grippers	1088
2-Finger Angular Grippers	1142
3-Finger Angular Grippers	1280
2-Finger Radial Grippers	1282
Internal Hole Grippers	1368
SCHUNK electric Grippers	1378
2-Finger Parallel Grippers	1378
3-Finger Centric Grippers	1534
Magnetic Grippers	1552
Pneumatic Rotary Gripping Modules	1586
Special Grippers	1616
Accessories	1618
SCHUNK Contact	1784
SCHUNK Service	1784
Subsidiaries/Distribution Partners	1786
Plants	1788
Catalog Order	1789
Fax Order	1790

2-Finger pneumatic Parallel Grippers | Page 48

2-Finger Parallel Grippers | Page 54

MPG-plus
Miniature Parallel Gripper

- For small to medium-sized components in assembly automation
- Gripping force from 25 N to 350 N
- Stroke per finger 1.5 mm to 10 mm
- 7 sizes, 16 to 64

2-Finger Parallel Grippers | Page 128

MPG
Miniature Parallel Gripper **

- For dynamic gripping applications with lightweight components
- Gripping force from 7 N to 270 N
- Stroke per finger 1 mm to 10 mm
- 9 sizes, 10 to 64

2-Finger Parallel Grippers | Page 190

KTG
Small Components Gripper

- Robust small components gripper with center bore for media feed-through
- 13 N gripping force
- 4.5 mm stroke per finger
- Size 50

2-Finger Parallel Grippers | Page 198

KGG
Small Components Gripper

- Narrow gripper with robust T-slot guide for high loads
- Gripping force from 45 N to 540 N
- Stroke per finger 10 mm to 60 mm
- 7 sizes, 60 to 280

2-Finger Parallel Grippers | Page 246

RH
Small Components Gripper

- Cost-effective gripper for light handling applications
- Gripping force from 13 N to 65 N
- Stroke per finger 2.5 mm to 6 mm
- 10 sizes, 901K to 806KP

2-Finger Parallel Grippers | Page 280

PGN-plus
Universal Gripper

- With robust multi-tooth guidance and high maximum moments for use of long gripper fingers
- Maximum gripping force 123 N to 21,800 N
- Stroke per finger 2.5 mm to 45 mm
- 11 sizes, 40 to 380

2-Finger Parallel Grippers | Page 414

JGP
Universal Gripper

- Grippers of the compact class with T-slot guidance and an optimal cost-effectiveness ratio
- Maximum gripping force 123 N to 7,400 N
- Stroke per finger 2.5 mm to 35 mm
- 10 sizes, 40 to 300

2-Finger Parallel Grippers | Page 524

PGF
Universal Gripper

- Gripper with large, surface-guided base jaws for a broad spectrum of parts
- Gripping force from 240 N to 1,970 N
- Stroke per finger 7.5 mm to 31.5 mm
- 5 sizes, 50 to 125

2-Finger Parallel Grippers | Page 556

PGB
Universal Gripper

- With robust multi-tooth guidance and high maximum moments for use of long gripper fingers for media feed-through
- Gripping force from 110 N to 640 N
- Stroke per finger 4 mm to 10 mm
- 4 sizes, 64 to 125

** For new applications use of the MPG-plus is recommended.

2-Finger Parallel Grippers | *

DPG-plus IP67 Sealed Gripper

- Sealed gripper with robust multi-tooth guidance for high maximum moments
- High gripping forces from 110 N to 11,700 N
- Stroke per finger 2.5 mm to 35 mm
- 10 sizes, 40 to 300

2-Finger Parallel Grippers | Page 604

PHL Long-stroke Gripper

- Gripper with long stroke and freely selectable guidance variants
- Gripping force from 390 N to 3,250 N
- Stroke per finger 30 mm to 160 mm
- 5 sizes, 25 to 63

2-Finger Parallel Grippers | Page 648

PFH-mini Long-stroke Gripper

- Very compact gripper with long stroke for medium workpiece weights
- Gripping force from 630 N to 2,950 N
- Stroke per finger 30 mm to 100 mm
- 3 sizes, 30 to 50

2-Finger Parallel Grippers | Page 670

PFH Long-stroke Gripper

- Gripper with long stroke, for handling automobile wheel rims, for example
- 2,200 N gripping force
- Stroke per finger 150 mm to 300 mm
- 4 sizes, 150 to 300

2-Finger Parallel Grippers | Page 698

CGH Long-stroke Gripper

- Lightweight gripper with carbon fiber housing and integrated moment decoupling for absorbing high gripping forces
- 2,500 N gripping force
- Stroke per finger up to 160 mm
- Size 80

2-Finger Parallel Grippers | *

PSH Long-stroke Gripper

- With sealed round guides for use in slightly dirty environments
- Gripping force from 320 N to 1,760 N
- Stroke per finger 14 mm to 100 mm
- 4 sizes, 22 to 52

2-Finger Parallel Grippers | Page 706

SPG Heavy-duty Gripper

- Gripper with high gripping force for handling heavy workpieces
- 10,000 N gripping force
- Stroke per finger up to 100 mm
- Size 100

* For more information on this product please visit **www.schunk.com.**

3-Finger pneumatic Centric Grippers | Page 714

3-Finger Centric Grippers | Page 718

MPZ
Small Components Gripper

- For small to medium-sized components in assembly automation
- Gripping force from 20 N to 310 N
- Stroke per finger 1 mm to 5 mm
- 6 sizes, 16 to 45

3-Finger Centric Grippers | Page 762

PZN-plus
Universal Gripper

- With robust multi-tooth guidance and high maximum moments for use of long gripper fingers
- Maximum gripping force 255 N to 59,500 N
- Stroke per finger 2.5 mm to 40 mm
- 11 sizes, 40 to 380

3-Finger Centric Grippers | Page 882

JGZ
Universal Gripper

- Grippers of the compact class with T-slot guidance and an optimal cost-effectiveness ratio
- Maximum gripping force 255 N to 22,700 N
- Stroke per finger 2.5 mm to 16 mm
- 10 sizes, 40 to 30

3-Finger Centric Grippers | Page 956

PZH-plus
Long-stroke Gripper

- Gripper with long stroke for handling thin-walled, rotationally symmetric components
- Gripping force from 400 N to 4,400 N
- Stroke per finger 20 mm to 75 mm
- 3 sizes, 20 to 75

3-Finger Centric Grippers | Page 984

PZB-plus
Universal Gripper

- Gripper with large center bore for media feed-through
- Gripping force from 340 N to 27,600 N
- Stroke per finger 2.5 mm to 35 mm
- 10 sizes, 50 to 300

3-Finger Centric Grippers | *

DPZ-plus IP67
Sealed Gripper

- Sealed gripper with robust multi-tooth guidance for high maximum moments
- High gripping forces from 230 N to 16,800 N
- Stroke per finger 2.5 mm to 25 mm
- 8 sizes, 40 to 200

3-Finger Centric Grippers with rotating Jaw Stroke | Page 1068

3-Finger Centric Grippers with rotating Jaw Stroke | Page 1068

PZH-SF-mini
Swivel Finger Gripper

- Gripper for cylindrical components and swivel-in fingers
- Gripping moment 70 Nm
- Angle per jaw 100°
- Size 125

3-Finger Centric Grippers with rotating Jaw Stroke | Page 1078

PZH-SF
Swivel Finger Gripper

- Swivel finger gripper with synchronized fingers due to rack and pinion principle
- Gripping moment 180 Nm
- Angle per jaw 59,7°
- Size 350

Multi-finger pneumatic Centric Grippers | Page 1088

Multi-finger Centric Grippers | Page 1090

PZV
4-Finger Centric Gripper

- Robust multi-tooth guidance with high maximum moments
- Gripping force from 570 N to 6,900 N
- Stroke per finger 4 mm to 16 mm
- 5 sizes, 64 to 200

2-Finger pneumatic Angular Grippers | Page 1142

2-Finger Angular Grippers | *

SGB
Small Components Gripper

- Plastic gripper for lightweight workpieces
- Gripping torque from 0.9 Nm to 4.95 Nm
- Opening angle per finger 8°
- 3 sizes, 32 to 50

2-Finger Angular Grippers | Page 1144

SWG
Small Components Gripper

- Narrow and compact design for reducing the interfering contour
- Gripping torque from 0.01 Nm to 2.8 Nm
- Opening angle per finger 15°
- 8 sizes, 10 to 50

2-Finger Angular Grippers | Page 1192

PWG-plus
Universal Gripper

- Robust gripper with spring-assisted maintenance of gripping force
- Gripping torque from 3.5 Nm to 617 Nm
- Opening angle per finger 15°
- 8 sizes, 50 to 240

3-Finger pneumatic Angular Grippers | Page 1280

3-Finger Angular Grippers | *

SGW
Small Components Gripper

- Plastic gripper for lightweight workpieces
- Gripping torque from 2.3 Nm to 10.5 Nm
- Opening angle per finger 8°
- 3 sizes, 40 to 64

* For more information on this product please visit **www.schunk.com.**

2-Finger pneumatic Radial Grippers | Page 1282

2-Finger Radial Grippers | Page 1284

PRG
Universal Gripper

- For especially short operating cycles in the application
- Gripping torque from 2 Nm to 295 Nm
- Opening angle 30°/60°/90°
- 8 sizes, 26 to 125

2-Finger Radial Grippers | *

DRG IP67
Sealed Gripper

- Completely sealed mechanism for protection from media in the environment
- Gripping torque from 8 Nm to 143 Nm
- Adjustable opening angle from 10° to 180°
- 5 sizes, 44 to 100

2-Finger Radial Grippers | Page 1346

GAP
Radial Gripper

- With positively guided angular/parallel stroke in one functional unit
- Gripping force from 56 N to 430 N
- Adjustable opening angle from 60° to 180°
- 3 sizes, 16 to 32

Pneumatic Internal Hole Grippers | Page 1368

Internal Hole Grippers | Page 1370

LOG
Internal Hole Gripper

- With up to 60% lower weight than conventional hole grippers for high dynamics
- Gripping force from 27 N to 2,516 N
- Stroke per finger 0.15 mm to 5.8 mm
- 79 sizes, 20 to 99
- Workpiece weight 0.55 kg to 12.83 kg

2-Finger electric Parallel Grippers | Page 1378

2-Finger Parallel Grippers | Page 1382

EGP
Small Components Gripper

- Direct pneumatic replacement, with fourfold adjustable gripping force
- Gripping force from 20 N to 215 N
- Stroke per finger 3 mm to 8 mm
- 3 sizes, 25 to 50

2-Finger Parallel Grippers | Page 1404

MEG
Small Components Gripper

- With smooth-running, roller-guided base jaw guidance for high dynamics
- Gripping force from 40 N to 140 N
- Stroke per finger 6 mm to 10 mm
- 3 sizes, 40 to 64

2-Finger Parallel Grippers | Page 1420

EGN
Universal Gripper

- For cycle reduction in handling due to presetting of the gripper finger position
- Gripping force from 170 N to 1,000 N
- Stroke per finger 8 mm to 16 mm
- 3 sizes, 80 to 160
- Gripper with servomotor

2-Finger electric Parallel Grippers | Page 1378

2-Finger Parallel Grippers | Page 1442

EVG
Universal Gripper

- Very sensitive gripper with a gripping force of 5 N to 57 N
- One size 55 with two stroke variants
- Stroke per finger 20 mm to 50 mm

2-Finger Parallel Grippers | Page 1454

WSG
Intelligent Gripper

- Optionally with Profibus, ProfiNet, CAN-Bus or Ethernet interface
- Integrated electronics with web server and micro SD card, in some versions

2-Finger Parallel Grippers | Page 1468

PG
Universal Gripper

- With completely integrated of the control, regulation and power electronics, including different interfaces
- For sensitive gripping force regulation from 30 N to 200 N
- 34 mm stroke per finger

2-Finger Parallel Grippers | Page 1480

PEH
Long-stroke Gripper

- Complete integration of the control, regulation and power electronics, including different interfaces
- Gripping force regulation from 150 N to 1,800 N
- Stroke per finger 60 mm to 100 mm
- 3 sizes, 30 to 50

2-Finger Parallel Grippers | Page 1502

EGA Gripper with adaptable Drive

- Gripping force from 500 N to 1,300 N
- Stroke per finger 30 mm to 100 mm
- 2 sizes: 25 and 40
- Compatible with many standard servo motors

2-Finger Parallel Grippers | Page 1518

LEG
Long-stroke Gripper

- With modular drive concept, compatible with standard robot controllers via standard servomotors
- Gripping force from 1,050 N to 1,500 N
- Stroke per finger 101 mm to 281 mm

* For more information on this product please visit **www.schunk.com.**

3-Finger electric Centric Grippers | Page 1534

3-Finger Centric Grippers | Page 1536

EZN
Universal Gripper

- For cycle reduction in handling due to presetting of the gripper finger position
- Gripping force from 500 N to 800 N
- Stroke per finger 6 mm to 10 mm
- 2 sizes, 64 to 100
- Gripper with servomotor

Magnetic Grippers | Page 1552

Magnetic Grippers | Page 1554

EGM
Magnetic Gripper

- For maximum holding power in minimum space
- Reliable holding forces after activation

Pneumatic Rotary Gripping Modules | Page 1586

Rotary Gripping Modules | Page 1588

GSM-P
Rotary Gripping Module with Parallel Gripper

- Compact module for assembly automation
- Gripping force from 25 N to 270 N

Special Grippers | *

Special Grippers | *

ORG
O-Ring Assembly Gripper

- For reliable external and internal assembly with only one gripper
- For O-rings from Ø 5 mm to Ø 150 mm
- Adjustable opening strokes
- Size 85

Special Grippers | *

Gripper with GSW-B
Shaft Interface

- For flexible use in machining centers
- Gripping force from 190 N to 5,900 N
- Stroke per finger 2 mm to 10 mm
- 2 sizes: 50 and 100

Special Grippers | *

Gripper with GSW-B-AGE
Shaft Interface and Compensation Unit

- For compensation of tolerances and positioning accuracy
- Gripping force from 190 N to 5,900 N
- Stroke per finger 2 mm to 10 mm
- 4 sizes, 50 to 100
- Flexible compensation unit

Special Grippers | *

GSW-V
Vacuum Gripper

- For handling of parts in the machining center
- Operation possible through cooling lubricant or compressed air

Special Grippers | *

GSW-M
Magnetic Gripper

- For use in your machining center
- Magnetic gripper for handling sheet metal or workpieces with a complex external contour

Special Grippers | *

RGG
Cleaning Unit

- Inexpensive module for cleaning the workspace of a machining center

* For more information on this product please visit **www.schunk.com.**

Accessories | Page 1618

Accessories | Page 1628

Sensor Systems

- Position sensors
- Workpiece monitoring
- Force measurement

Accessories | Page 1712

Sensor System Accessories

- Testing of sensors
- Mounting of sensors
- Adjustment of sensors

Accessories | Page 1720

Cables, Connectors, and Distributors

- Numerous versions
- Different connectors
- Pre-configured

Accessories | Page 1754

Motor Controller

- Bus-capable
- Flexible
- Modular

Accessories | Page 1760

Fastening Elements

- Absolutely precise
- Suitable for all SCHUNK products
- Easy mounting

Accessories | Page 1768

Jaw Systems

- Quick-change systems
- Universal intermediate jaws
- For a flexible parts spectrum

Accessories | *

Fingers and Jaws

- Made of steel and aluminum
- For different series
- Optionally integrated jaw quick-change system

Accessories | *

Clamping Inserts

- Made of plastic or carbide
- For increasing the coefficient of friction
- For gentle gripping of the workpiece

Accessories | *

Covers

- Protects grippers against dirt and liquids
- Protection class up to IP67
- For pneumatic and mechatronic components

Accessories | Page 1780

Valves and Fittings

- Brackets, swivel and flow control fittings
- Pressure maintenance valve
- For numerous SCHUNK pneumatic components

Accessories | *

Lubricating Greases

- Increased tool life
- For maintenance and care
- For guide elements under high loads

* For more information on this product please visit **www.schunk.com.**

SCHUNK pneumatic Grippers

	Page		Stroke per finger [mm]			Gripping force [N]			
			1 – 10	11 – 100	101 – 1000	10 – 100	101 – 1000	1001 – 10000	10001 – 100000
2-Finger Parallel Grippers									
MPG-plus	54		1.5 – 10			25 – 350			
MPG **	128		1 – 10			7 – 270			
KTG	190		4.5			13			
KGG	198			10 – 60			45 – 670		
RH	246		2.5 – 40			13 – 460			
PGN-plus	280		2.5 – 45				123 – 21800		
JGP	414		2.5 – 35				123 – 7660		
PGF	524			7.5 – 31.5			240 – 1970		
PGB	556		4 – 10				90 – 640		
DPG-plus	*		2.5 – 45				110 – 11430		
PHL	604			30 – 160			390 – 4190		
PFH-mini	648			30 – 100			630 – 2950		
PFH	670				150 – 300			2200	
CGH	698				100 – 160			2500	
PSH	*			14 – 64			320 – 1760		
SPG	706				100				11480
3-Finger Centric Grippers									
MPZ	718		1 – 5			20 – 340			
PZN-plus	762		2.5 – 45				255 – 59500		
JGZ	882		2.5 – 35				255 – 22700		
PZH-plus	956			20 – 75			375 – 4400		
PZB-plus	984		2.5 – 35				340 – 27600		
DPZ-plus	*		2.5 – 25				230 – 17150		

* For more information on this product please visit **www.schunk.com.** ** For new applications use of the MPG-plus is recommended.

	Ambient conditions						Diversity of variants	Diverse sensor systems
	Normal, clean environment	Dirty environment I, coarse dust	Dirty environment II, fine dust and fluids	Dirty environment III, aggressive fluids	High-temperature range > 90 °C	Cleanroom		
	●	○				○	++	++
	●	○				○	++	++
	●	○			●	○	+	+
	●	○			●	○	++	+
	●						+	+
	●	●	◑	◑	●	◑	+++	+++
	●	◑					+	++
	●	○			●	○	+	+
	●	◑			●	○	+	++
	●	●	●	◑		◑	+	+
	●	◑	○				++	++
	●	◑	○		●		++	++
	●	○	○		●		+	++
	●						+	+
	●	●	●	●	●	○	+	+
	●	○					+	+
	●	◑				○	+	+
	●	●	◑	◑	●	◑	+++	+++
	●	◑					+	++
	●	◑	○	○	○		+	+
	●	◑	○	○	●		+	++
	●	●	●	◑		◑	+	+

● = very suitable ◑ = suitable ○ = suitable in custom version + = medium selection ++ = large selection +++ = very large selection

SCHUNK pneumatic Grippers

	Page		Angle / jaw [°]	Gripping moment [Nm]
			1 – 360	0.01 – 10 / 11 – 100 / 101 – 1000
3-Finger Centric Grippers with rotating Jaw Stroke				
PZH-SF-mini	1068		100	70
PZH-SF	1078		59.7	180

	Page		Stroke per finger [mm]	Gripping force [N]
			1 – 10 / 11 – 100 / 101 – 1000	10 – 100 / 101 – 1000 / 1001 – 10000 / 10001 – 100000
Multi-finger Centric Grippers				
PZV	1090		4 – 16	570 – 7300

	Page		Opening angle [°]	Gripping moment [Nm]
			1 – 100 / 101 – 200	0.01 – 10 / 11 – 100 / 101 – 1000
2-Finger Angular Grippers				
SGB	*		8	0.9 – 4.95
SWG	1144		15	0.01 – 2.8
PWG-plus	1192		15	3.3 – 1025
3-Finger Angular Grippers				
SGW	1280		8	1.35 – 7.45
2-Finger Radial Grippers				
PRG	1284		30 – 90	2 – 295
DRG	*		10 – 90	8.2 – 143
GAP	1346		30 – 90	56 – 430*

* Since the GAP is an angular parallel gripper, the values are to be understood as force [N].

	Page		Stroke per finger [mm]	Gripping force [N]
			1 – 10 / 11 – 100 / 101 – 1000	10 – 100 / 101 – 1000 / 1001 – 10000 / 10001 – 100000
Internal Hole Grippers				
LOG	1370		0.15 – 5.8	27 – 2516

* For more information on this product please visit **www.schunk.com.**

	Ambient conditions						Diversity of variants	Diverse sensor systems
	Normal, clean environment	Dirty environment I, coarse dust	Dirty environment II, fine dust and fluids	Dirty environment III, aggressive fluids	High-temperature range > 90 °C	Cleanroom		
	●	◑	◑				+	+
	●	◑	◑				+	+
	●	◑			◑		+	+++
	●	○				○	+	+
	●	○			●	○	+	+
	●	◑	○	○	●	○	++	++
	●	○				○	+	+
	●	○			●	○	++	++
	●	●	●	◑	●	○	++	++
	●	○				○	++	+
	●	●	●			○	+++	

● = very suitable ◑ = suitable ○ = suitable in custom version

+ = medium selection ++ = large selection +++ = very large selection

SCHUNK Grippers

Product Quickfinder

SCHUNK electric Grippers

	Page		Stroke per finger [mm]			Gripping force [N]			
			1 – 10	11 – 100	101 – 1000	1 – 100	101 – 1000	1001 – 10000	10001 – 100000
2-Finger Parallel Grippers									
EGP	1382		3 – 8			20 – 215			
MEG	1404		6 – 10			40 – 140			
EGN	1420		8 – 16				400 – 1000		
EVG	1442			20 – 50		5 – 57			
WSG	1454				34 – 105	5 – 80			
PG	1468			34		30 – 200			
PEH	1480				60 – 100		150 – 1800		
EGA	1502				30 – 100		100 – 1300		
LEG	1518				101 – 281		300 – 1500		
3-Finger Centric Grippers									
EZN	1536			6 – 10			140 – 800		

	Page		Magnetic surface [cm²]			Gripping force [N]			
			1 – 100	101 – 200	201 – 300	10 – 100	101 – 1000	1001 – 10000	10001 – 100000
Magnetic Grippers									
EGM	1554		12 – 196					900 – 24750	

Pneumatic Rotary Gripping Modules

	Page		Stroke per finger [mm]			Gripping force [N]			
			1 – 10	11 – 100	101 – 1000	10 – 100	101 – 1000	1001 – 10000	10001 – 100000
Rotary Gripping Modules									
GSM-P	1588		2 – 10			14.4 – 162			

* For more information on this product please visit **www.schunk.com.**

	Ambient conditions						Diversity of variants	Diverse sensor systems	Motor	Motor controller	Controller *	
	Normal, clean environment	Dirty environment I, coarse dust	Dirty environment II, fine dust and fluids	Dirty environment III, aggressive fluids	High-temperature range > 90 °C	Cleanroom					SCHUNK	Motor-dependent
	●	○				○	++	+	integrated	integrated		
	●	○				○	+		integrated	external	X	
	●	●	◑	◑		○	++		integrated	external		
	●					○	+		integrated	external	X	
	●					○	++		integrated	integrated		
	●					○	+		integrated	integrated		
	●	○					+		integrated	integrated		
	●	◑	○				++		adaptable	external		X
	●	○					++		adaptable	external		X
	●	●	◑	◑		○	++		integrated	external	X	

	●	●	◑			○	+++			external	X	

	●					○	++	+

● = very suitable ◑ = suitable ○ = suitable in custom version

+ = medium selection ++ = large selection +++ = very large selection

SCHUNK special Grippers

	Page		Description	Areas of application	
Special Grippers					
ORG	*		O-ring gripper	For automated assembly of O-rings	
GSW-B	*		Universal gripper with shaft interface	For fully automated loading and unloading of machining centers	
GSW-B with AGE	*		Universal gripper with shaft interface and compensation unit	For fully automated loading and unloading of clamping devices, such as vises	
GSW-V	*		Vacuum gripper with shaft interface	For fully automated loading and unloading of flat workpieces	
GSW-M	*		Magnetic gripper with shaft interface	For fully automated loading and unloading of ferromagnetic workpiece families	
RGG (cleaning unit)	*		Cleaning unit with shaft interface	For cleaning clamping devices, for example, and for automated cleaning of machining centers	

* For more information on this product please visit **www.schunk.com**.

	Ambient conditions						Diversity of variants	Diverse sensor systems
	Normal, clean environment	Dirty environment I, coarse dust	Dirty environment II, fine dust and fluids	Dirty environment III, aggressive fluids	High-temperature range > 90 °C	Cleanroom		
	●					○	+	+
	●	●	◑	◑	●	○	++	+
	●	◑	◑	◑	●	○	++	+
	●	○	○				+	
	●	○	○				+	
	●	●	●	●	●		+	

● = very suitable ◑ = suitable ○ = suitable in custom version

+ = medium selection ++ = large selection +++ = very large selection

The world's most extensive Selection of Variants and Accessories for ensuring the Process Reliability of your Automation Application.

2-Finger Parallel Grippers

MPG-plus Miniature Parallel Gripper

Series	Size	Page
MPG-plus		54
MPG-plus	16	58
MPG-plus	20	64
MPG-plus	25	70

Series	Size	Page
MPG-plus	32	82
MPG-plus	40	94
MPG-plus	50	106
MPG-plus	64	118

MPG Miniature Parallel Gripper

Series	Size	Page
MPG		128
MPG	10	132
MPG	12	136
MPG	16	140
MPG	20	144

Series	Size	Page
MPG	25	150
MPG	32	158
MPG	40	166
MPG	50	174
MPG	64	182

- For new applications the use of the MPG-plus is recommended.

KTG Small Components Gripper

Series	Size	Page
KTG		190
KTG	50	194

KGG Small Components Gripper

Series	Size	Page
KGG		198
KGG	60	202
KGG	70	210
KGG	80	218

Series	Size	Page
KGG	100	236
KGG	140	232
KGG	220	238
KGG	280	242

RH Small Components Gripper

Series	Size	Page
RH		246
RH	901 K	250
RH	901 K- ST 10	252
RH	905	254
RH	907	256
RH	925	260

Series	Size	Page
RH	940	264
RH	9010	268
RH	918	272
RH	806	276
RH	801	278

PGN-plus Universal Gripper

Series	Size	Page
PGN-plus		280
PGN-plus	40	286
PGN-plus	50	294
PGN-plus	64	306
PGN-plus	80	320
PGN-plus	100	334

Series	Size	Page
PGN-plus	125	348
PGN-plus	160	362
PGN-plus	200	374
PGN-plus	240	386
PGN-plus	300	396
PGN-plus	380	406

JGP Universal Gripper

Series	Size	Page
JGP		414
JGP	40	418
JGP	50	426
JGP	64	436
JGP	80	448
JGP	100	460

Series	Size	Page
JGP	125	472
JGP	160	484
JGP	200	496
JGP	240	506
JGP	300	514

PGF Universal Gripper

Series	Size	Page
PGF		524
PGF	50	528
PGF	64	534

Series	Size	Page
PGF	80	540
PGF	100	546
PGF	125	552

PGB Universal Gripper

Series	Size	Page
PGB		556
PGB	64	560
PGB	80	570

Series	Size	Page
PGB	100	582
PGB	125	594

DPG-plus Sealed Gripper

Series	Size
DPG-plus	
DPG-plus	40
DPG-plus	50
DPG-plus	64
DPG-plus	80
DPG-plus	100

Series	Size
DPG-plus	125
DPG-plus	160
DPG-plus	200
DPG-plus	240
DPG-plus	300
DPG-plus	380

For more informationen on this product please visit **www.schunk.com**.

PHL Long-stroke Gripper

Series	Size	Page
PHL		604
PHL	25	608
PHL	32	616
PHL	40	624
PHL	50	632
PHL	63	640

PFH-mini Long-stroke Gripper

Series	Size	Page
PFH-mini		648
PFH-mini	30	652
PFH-mini	40	658
PFH-mini	50	664

PFH Long-stroke Gripper

Series	Size	Page
PFH		670
PFH	150	674
PFH	200	680
PFH	250	686
PFH	300	692

CGH Long-stroke Gripper

Series	Size	Page
CGH		698
CGH	80	702

PSH Long-stroke Gripper

Series	Size
PSH	
PSH	22
PSH	32

Series	Size
PSH	42
PSH	52

For more informationen on this product please visit **www.schunk.com**.

SPG Heavy-duty Gripper

Series	Size	Page
SPG		706
SPG	100	710

Powerful. Compact. Fast.
MPG-plus Miniature Parallel Gripper

2-finger parallel gripper with smooth running base jaws guided on roller bearings

Field of Application

Gripping and moving of small to medium-sized workpieces in low contaminated environments, such as assembly, testing, laboratory, and pharmaceutical industry

Advantages – Your benefit

Cross roller guidance for precise gripping through base jaw guidance with minimum play

Drive concept oval piston for maximum gripping forces

Base jaws guided on double roller bearings ensuring low friction and smooth running actuation

Optimized basic load rating suitable for using long gripper fingers

Monitoring with electronic magnetic switches for a maximized process reliability

Mounting from two sides in four screw directions for universal and flexible gripper assembly

Air supply via hose-free direct connection or screw connections for flexible pressure supply in all automated systems

Compact dimensions for minimal interfering contours in handling

Sizes	Weight	Gripping force	Stroke per jaw	Workpiece weight
Quantity: 7	0.022 .. 0.63 kg	29 .. 350 N	1.5 .. 10 mm	0.17 .. 1.25 kg

Functional Description

The oval piston is moved up or down by compressed air.
The angled active surfaces of the wedge-hook produce a synchronized, parallel jaw motion.

① **Base jaw**
for the connection of workpiece-specific gripper fingers

② **Wedge-hook design**
for high power transmission and centric gripping

③ **Cross roller guidance**
Precise gripping through base jaw guide with minimum play

④ **Sensor system**
to monitor two switch-points

⑤ **Oval piston drive**
for power generation

⑥ **Housing**
Weight-optimized through application of high-strength aluminum alloy

CAD data, operating manuals and other current product documents are available at **www.schunk.com**

General Notes about the Series

Gripping force: is the arithmetic total of the gripping force applied to each gripper jaw at distance P (see illustration).

Finger length: is measured from the upper edge of the gripper housing in the direction of the main axis. The breach of the max. permitted finger length can bring higher abrasion. The maximum permissible finger length applies up to the nominal operating pressure. With higher pressures, the finger length must be reduced proportionally to the nominal operating pressure.

Repeat accuracy: is defined as the spread of the limit position after 100 consecutive strokes.

Workpiece weight: is calculated for a force-fit connection with a coefficient of friction of 0.1 and a safety factor of 2 against slippage of the workpiece on acceleration due to gravity g. Considerably heavier workpiece weights are permitted with form-fit gripping.

Closing and opening times: are purely the times that the base jaws or fingers are in motion. Valve switching times, hose filling times or PLC reaction times are not included in the above times and must be taken into consideration when determining cycle times.

Application example

Pneumatically driven, two axis assembly machine for small components

1. MPG-plus 2-Finger Parallel Gripper with standard finger blanks
2. CLM Mini-slide for vertical movement
3. CLM Mini-slide for horizontal movement

SCHUNK offers more ...

The following components make the product MPG-plus even more productive – the suitable addition for the highest functionality, flexibility, reliability, and controlled production.

Sensor System

Sensor Distributor

Sensor Cables

Flexible Position Sensor

Adapter Plates

SDV-P Pressure Maintenance Valve

Finger Blanks

Switching Valve

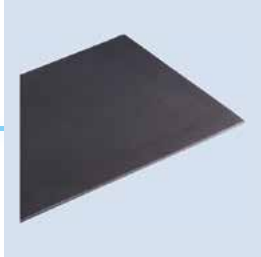

Gripper Pads

Plastic Inserts

Fittings

Centering Sleeves

ⓘ Further information regarding the products can be found on the following product pages or at www.schunk.com. Please contact us for further information: SCHUNK technical hotline +49-7133-103-2696

Options and special Information

Gripping force maintenance version AS / IS: The mechanical gripping force maintenance version ensures a minimum gripping force also in the case of a drop in pressure. In the AS / S version this has the effect of a closing force, in the IS version of an opening force.
Optional adapter plates: allows frontal mounting of the gripper
Precision version P: for the highest accuracy

MPG-plus 16

SCHUNK Grippers pneumatic | 2-Finger Parallel Grippers | Miniature Parallel Gripper

Gripping force, O.D. gripping

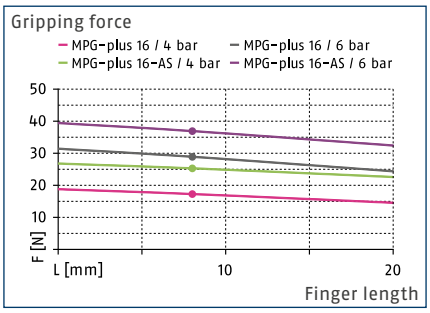

Gripping force, I.D. gripping

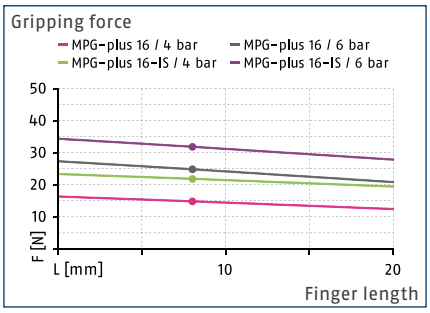

Finger load

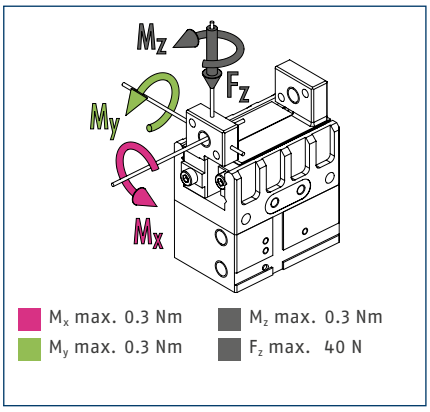

ⓘ The indicated moments and forces are static values, apply per base jaw and may occur simultaneously. M_y may arise in addition to the moment generated by the gripping force itself. If the max. permitted finger weight is exceeded, it is impreative to throttle the air supply so that the jaw movement occurs without any hitting or bouncing. Service life may be reduced.

Technical data

Description		MPG-plus 16	MPG-plus 16-AS	MPG-plus 16-IS
ID		0305481	0305482	0305483
Stroke per jaw	[mm]	1.5	1.5	1.5
Closing- / opening force	[N]	29/25	37/-	-/32
min. spring force	[N]		8	7
Weight	[kg]	0.022	0.025	0.025
Fluid consumption per double stroke	[cm³]	0.32	0.69	0.53
min. / max. operating pressure	[bar]	2/8	4/6.5	4/6.5
Nominal operating pressure	[bar]	6	6	6
Closing- / opening time	[s]	0.011/0.011	0.011/0.015	0.015/0.011
Closing- / opening time only with spring	[s]		0.03	0.03
max. permitted finger length	[mm]	20	20	20
max. permitted weight per finger	[kg]	0.01	0.01	0.01
IP class		30	30	30
min. / max. ambient temperature	[°C]	5/90	5/90	5/90
Repeat accuracy	[mm]	0.02	0.02	0.02
Options and their characteristics				
High-temperature version		39305481	39305482	39305483
min. / max. ambient temperature	[°C]	5/100	5/100	5/100

Main view

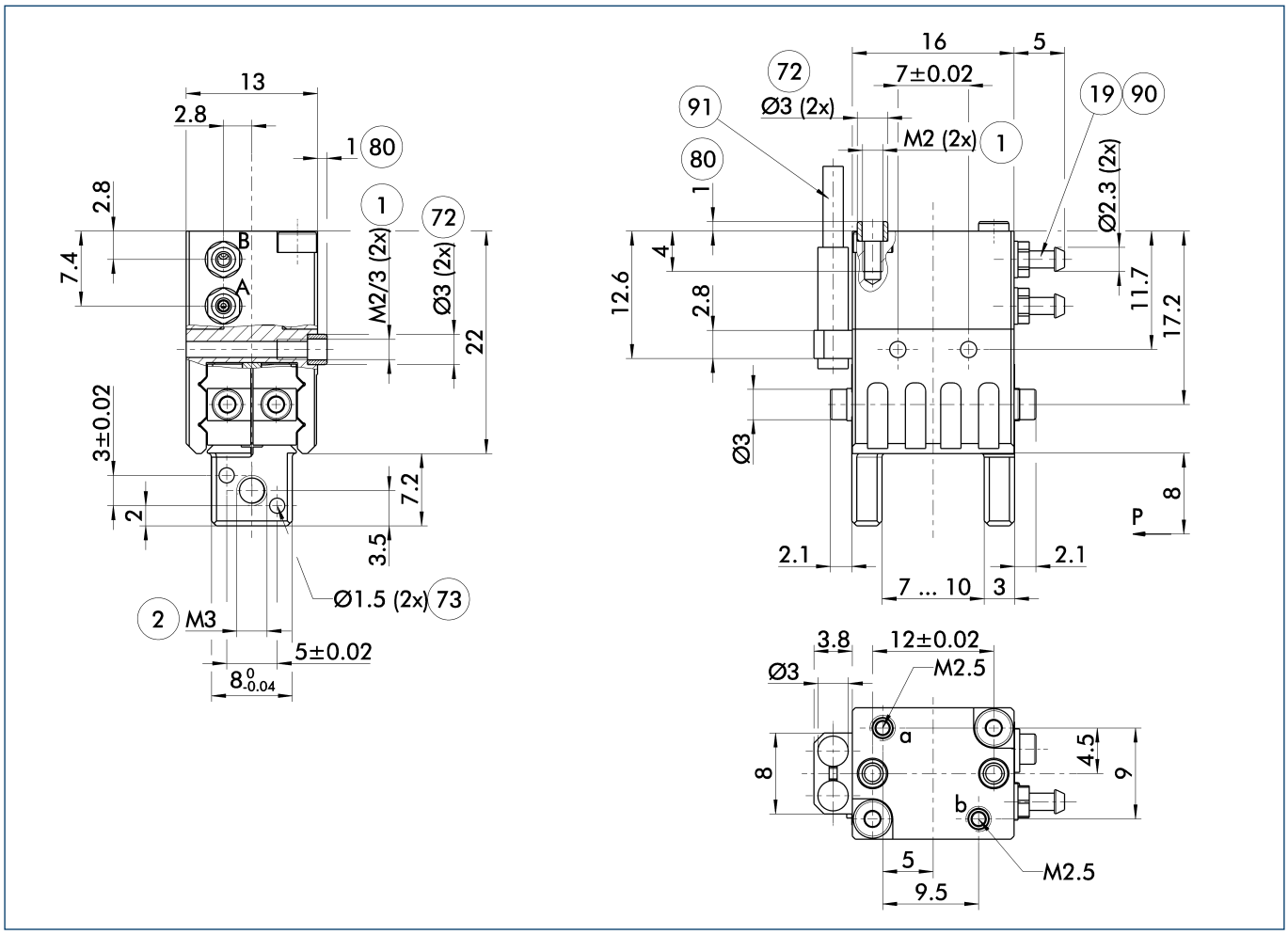

The drawing shows the basic version of the gripper with open jaws, without dimensional consideration of the options described below.

ⓘ The SDV-P pressure maintenance valve can also be used for I.D. or O.D. gripping alternatively or in addition to the spring-loaded, mechanical gripping force maintenance device (see catalog section on "Accessories").

A, a Main / direct connection, gripper opening

B, b Main / direct connection, gripper closing

(1) Gripper connection

(2) Finger connection

(19) Air connection

(72) Fit for centering sleeves

(73) Fit for centering pins

(80) Depth of the centering sleeve hole in the mating part

(90) Bosch-Rexroth compressed air hose, TU1-S (Ø 3.0 – 0.6) series, Order no.: 1820712066 (-67/-68/-69)

(91) IN ... sensor

Maximum permitted finger projection

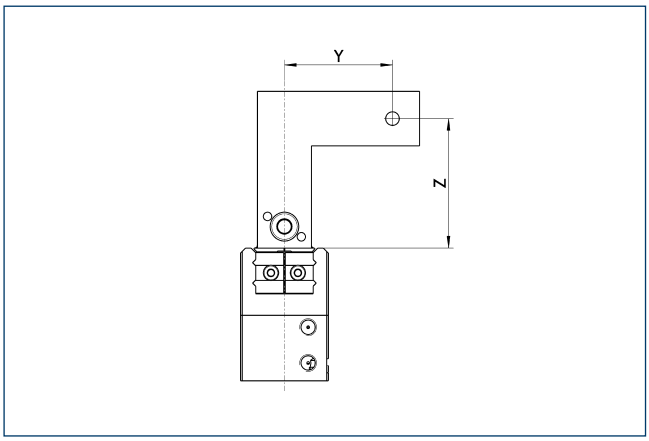

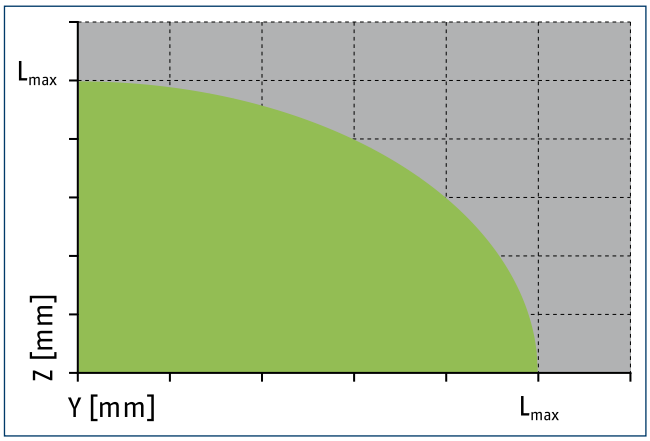

Permitted range Inadmissible range

L_{max} is equivalent to the maximum permitted finger length, see the chart of technical specifications.

Hose-free direct connection M2.5

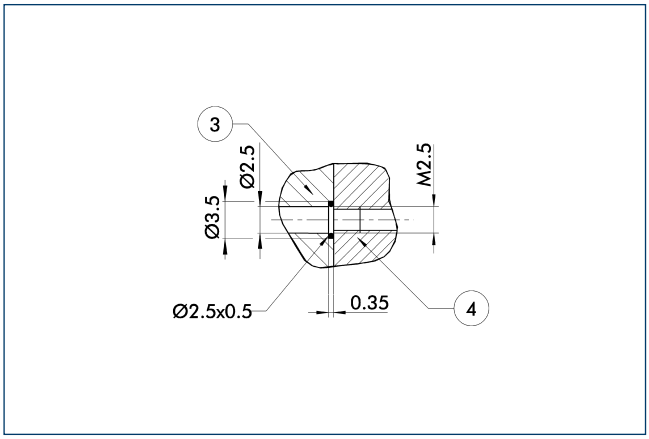

(3) Adapter (4) Gripper

The direct connection is used for supplying compressed air without hoses. Instead, the pressure medium is fed through bore-holes in the mounting plate.

Gripping force maintenance device AS / IS

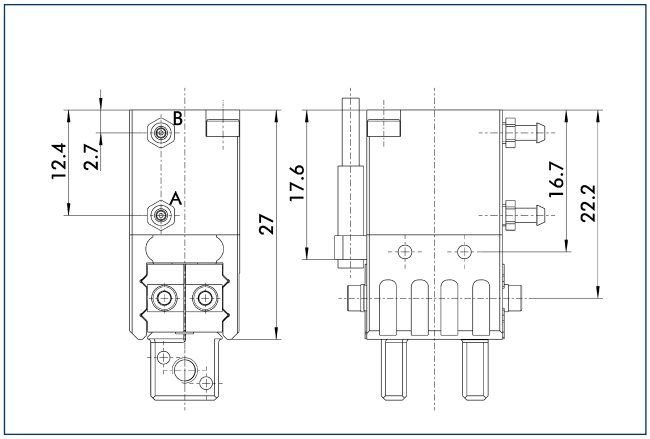

The mechanical maintenance of gripping force also assures a minimum gripping force in the case of a loss of pressure. With the AS / S variant, this acts as a closing force, and as an opening force for the IS variant. The maintenance of gripping force element can also be used as a means for increasing gripping force or for single actuated gripping.

Jaw design

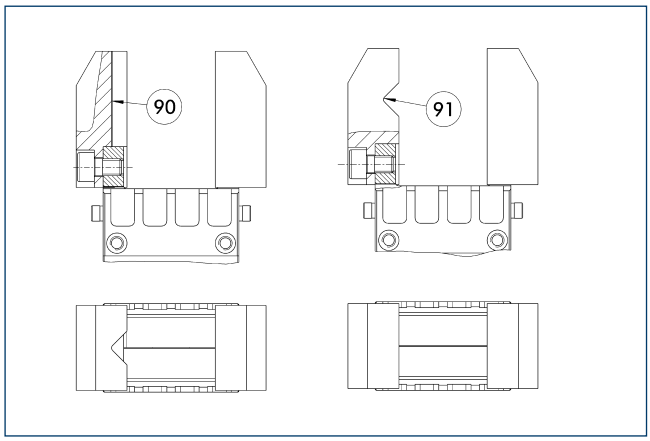

(90) Vertical prism
(91) Horizontal prism

A three-point support of the gripped workpiece is beneficial for gripping the workpiece with repeat accuracy and process reliability. More than three support points lead to a redundancy of the system. The drawing shows two alternative recommendations for the jaw design for coaxial and radial gripping of a cylindrical part.

Adapter plate

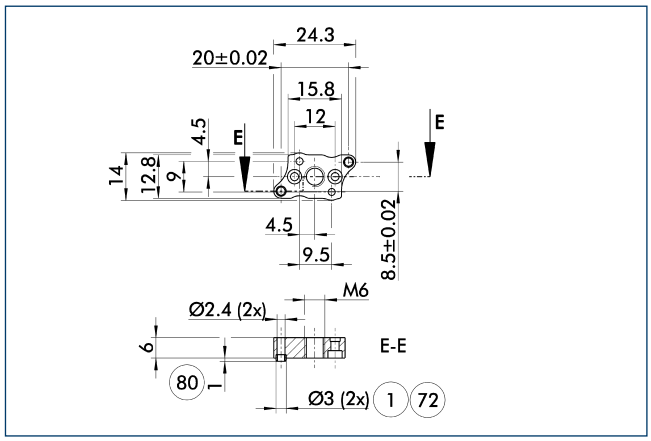

(1) Gripper connection
(72) Fit for centering sleeves
(80) Depth of the centering sleeve hole in the mating part

The adapter plate includes O-rings* for a hose-free direct connection, additional centering sleeves and screws for mounting the gripper.
*Only used with pneumatic actuators.

Description	ID	
Adapter plate		
APL-MPG-plus 16	0305487	

ⓘ The adapter plate is a separately ordered, optional accessory.

SDV-P pressure maintenance valve

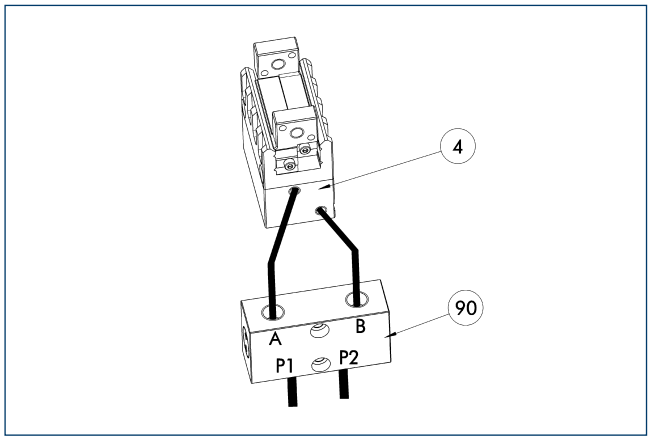

(4) Gripper
(90) SDV-P pressure maintenance valve

The SDV-P pressure maintenance valves ensure that the pressure in the piston chamber of pneumatic gripping, rotary, linear, and quick-change modules is maintained temporarily during an emergency stop.

Description	ID	
Pressure maintenance valve		
SDV-P 04	0403130	

Adapter plate

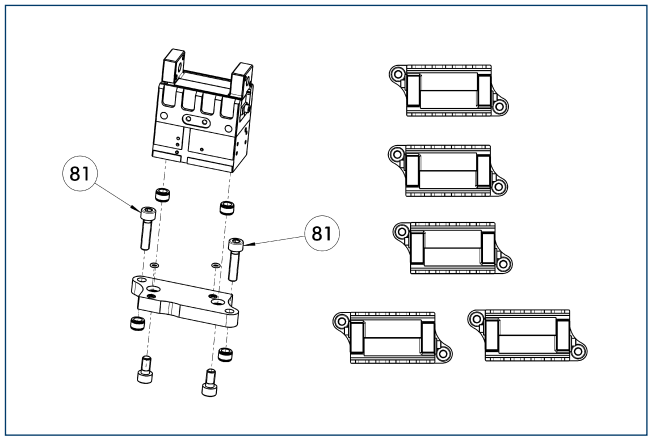

(81) Not included in the scope of delivery

The adapter plate includes O-rings* for a hose-free direct connection, additional centering sleeves and screws for mounting the gripper.
*Only used with pneumatic actuators.

Description	ID	
Adapter plate		
APL-MPG-plus 16	0305487	

ⓘ The adapter plate is a separately ordered, optional accessory.

Finger blanks with BSWS ABR-BSWS-MPG-plus 16

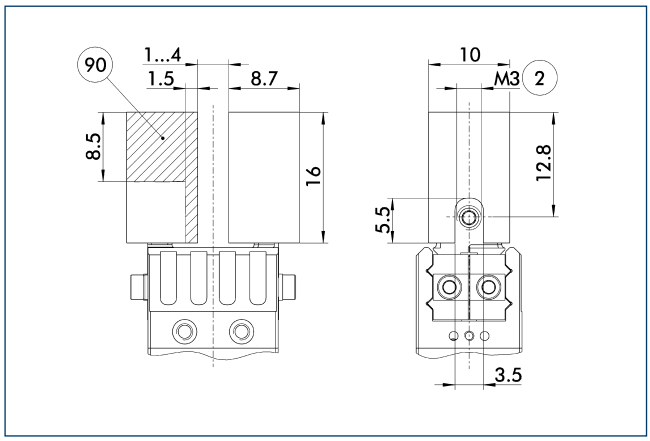

(2) Finger connection (90) Machining volume

Finger blanks for customized subsequent machining with integrated jaw quick-change system for precise and fast finger changes.

Description	ID	
Finger blanks with jaw quick-change system		
ABR-BSWS-MPG-plus 16	0302892	

Finger blanks with BSWS

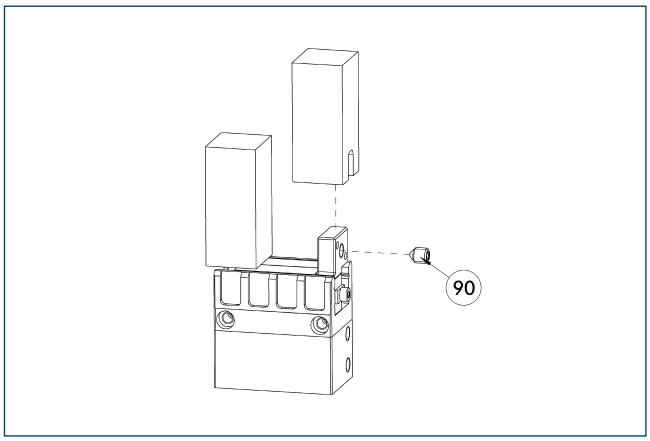

(90) Included in the jaw quick-change system's scope of delivery

The top jaw blanks with jaw quick-change system allow for fast and manual top jaw change on the gripper and already have the mechanical interface to the gripper. All the customer needs to do is integrate the workpiece-specific geometry into the blank.

Description	ID	
Finger blanks with jaw quick-change system		
ABR-BSWS-MPG-plus 16	0302892	

Modular assembly automation

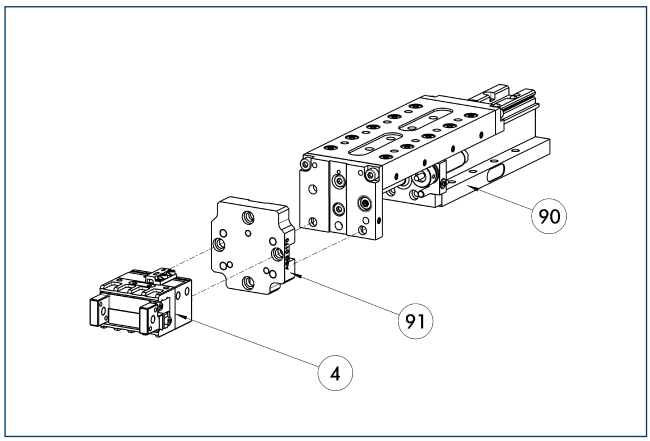

(4) Gripper (91) ASG adapter plate
(90) CLM / KLM / LM / ELM / ELS / HLM linear module

Gripper and linear modules can be combined with standard adapters out of the modular assembly system. For more information see our catalog "Modular Assembly Automation".

IN 3 inductive proximity switches

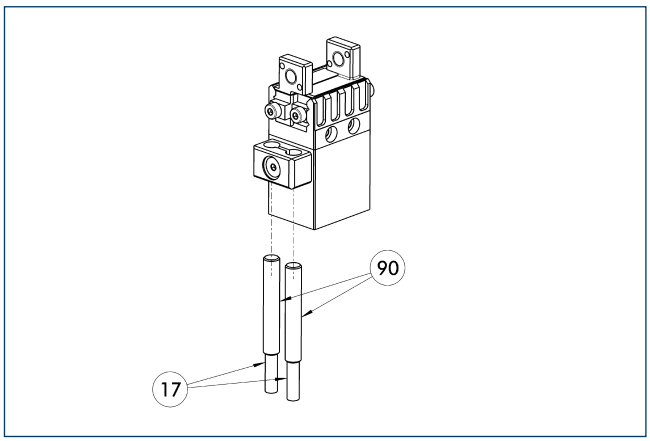

(17) Cable outlet (90) IN ... sensor

Description	ID	Often combined
Inductive proximity switches		
IN 3-S-M8-PNP	0301466	●
Connection cables		
KA BG08-L 3P-0300-PNP	0301622	
KA BG08-L 3P-0500-PNP	0301623	
KA BW08-L 3P-0300-PNP	0301594	
KA BW08-L 3P-0500-PNP	0301502	
Cable extensions		
KV BW08-SG08 3P-0030-PNP	0301495	
KV BW08-SG08 3P-0100-PNP	0301496	
KV BW08-SG08 3P-0200-PNP	0301497	

ⓘ Two sensors (closer/S) are required for each unit, plus extension cables as an option. Please note the minimum permitted bending radii for the sensor cables, which are generally 35 mm.

MPG-plus 20

SCHUNK Grippers pneumatic | 2-Finger Parallel Grippers | Miniature Parallel Gripper

Gripping force, O.D. gripping

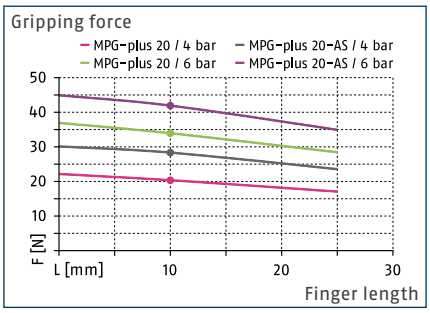

Gripping force, I.D. gripping

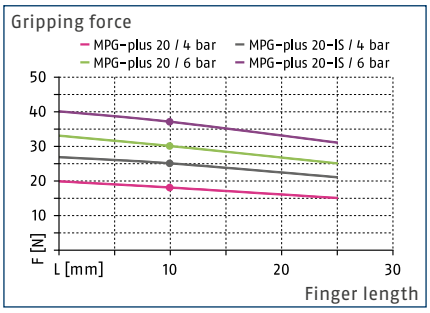

Finger load

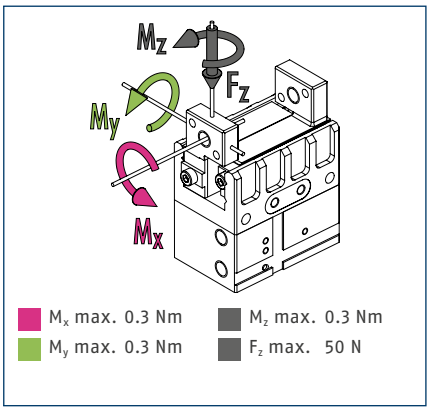

ⓘ The indicated moments and forces are static values, apply per base jaw and may occur simultaneously. M_y may arise in addition to the moment generated by the gripping force itself. If the max. permitted finger weight is exceeded, it is impreative to throttle the air supply so that the jaw movement occurs without any hitting or bouncing. Service life may be reduced.

Technical data

Description		MPG-plus 20	MPG-plus 20-AS	MPG-plus 20-IS	MPG-plus 20-FPS
ID		0305491	0305492	0305493	0305494
Stroke per jaw	[mm]	2	2	2	2
Closing- / opening force	[N]	34/30	42/-	-/37	34/30
min. spring force	[N]		8	7	
Weight	[kg]	0.035	0.042	0.042	0.04
Recommended workpiece weight	[kg]	0.17	0.17	0.17	0.17
Fluid consumption per double stroke	[cm³]	0.41	1.38	0.84	0.41
min. / max. operating pressure	[bar]	2/8	4/6.5	4/6.5	2/8
Nominal operating pressure	[bar]	6	6	6	6
Closing- / opening time	[s]	0.012/0.012	0.012/0.018	0.018/0.012	0.012/0.012
Closing- / opening time only with spring	[s]		0.06	0.06	
max. permitted finger length	[mm]	25	25	25	25
max. permitted weight per finger	[kg]	0.01	0.01	0.01	0.01
IP class		30	30	30	30
min. / max. ambient temperature	[°C]	5/90	5/90	5/90	5/90
Repeat accuracy	[mm]	0.02	0.02	0.02	0.02
Options and their characteristics					
High-temperature version		39305491	39305492	39305493	39305494
min. / max. ambient temperature	[°C]	5/100	5/100	5/100	5/100

Main view

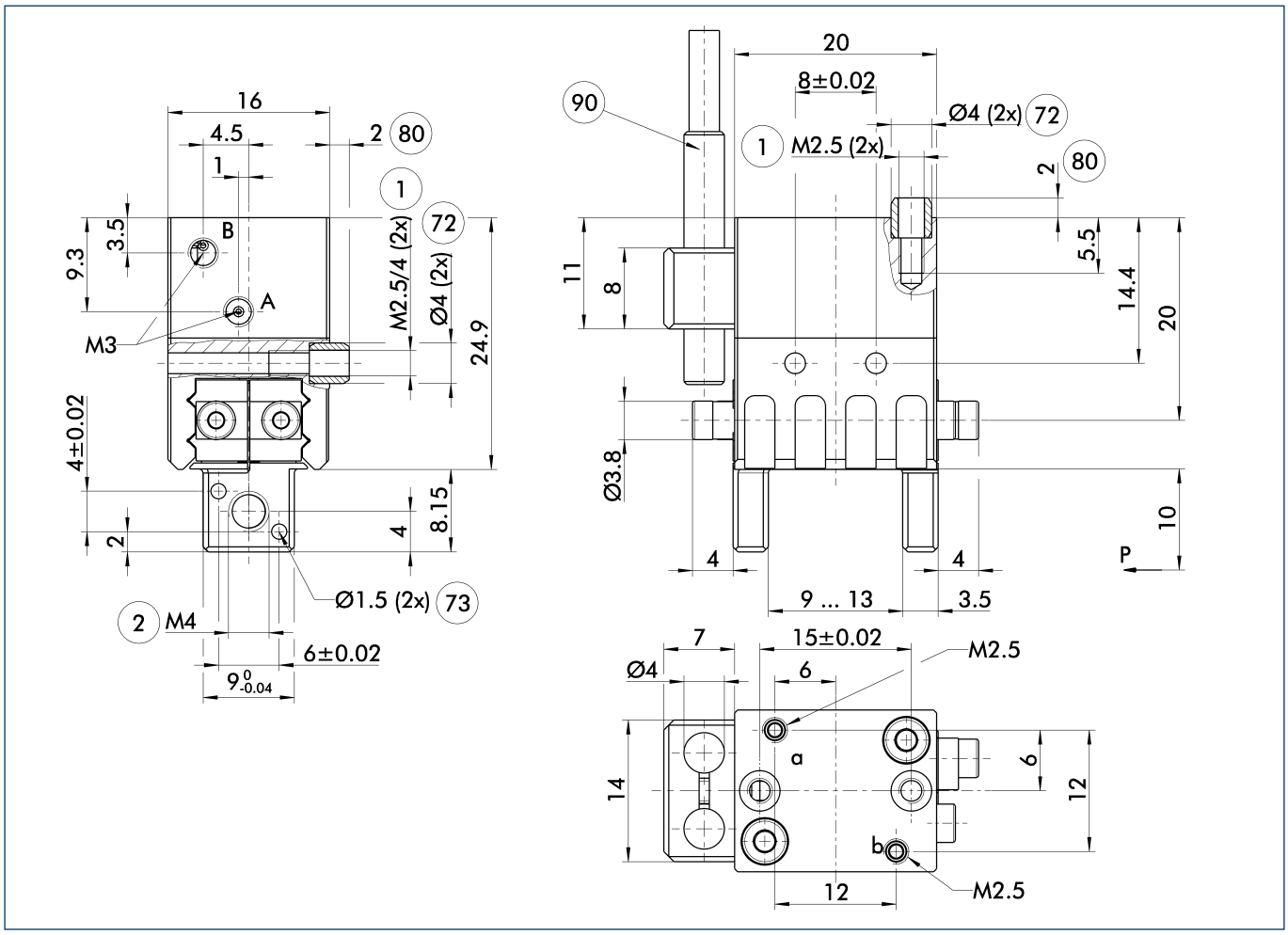

The drawing shows the basic version of the gripper with open jaws, without dimensional consideration of the options described below.

ⓘ The SDV-P pressure maintenance valve can also be used for I.D. or O.D. gripping alternatively or in addition to the spring-loaded, mechanical gripping force maintenance device (see catalog section on "Accessories").

A, a Main / direct connection, gripper opening

B, b Main / direct connection, gripper closing

(1) Gripper connection

(2) Finger connection

(72) Fit for centering sleeves

(73) Fit for centering pins

(80) Depth of the centering sleeve hole in the mating part

(90) IN ... sensor

Maximum permitted finger projection

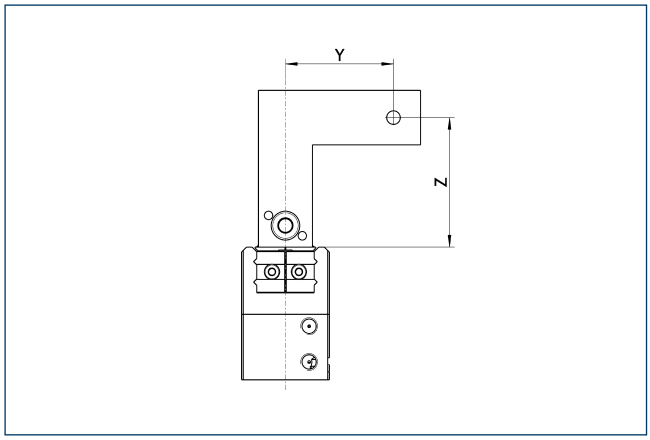

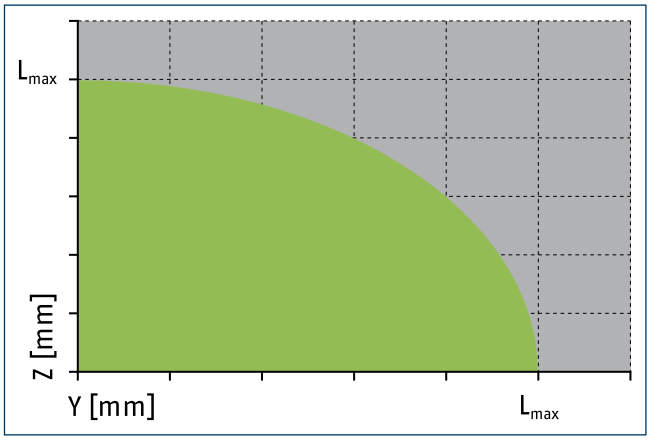

Permitted range

Inadmissible range

L_{max} is equivalent to the maximum permitted finger length, see the chart of technical specifications.

Hose-free direct connection M2.5

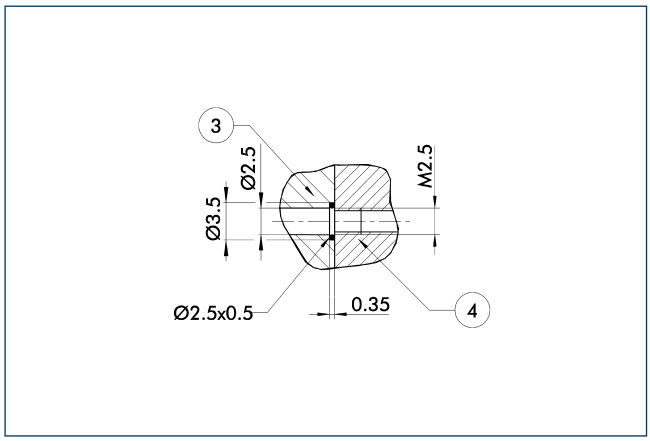

3 Adapter 4 Gripper

The direct connection is used for supplying compressed air without hoses. Instead, the pressure medium is fed through bore-holes in the mounting plate.

Gripping force maintenance device AS / IS

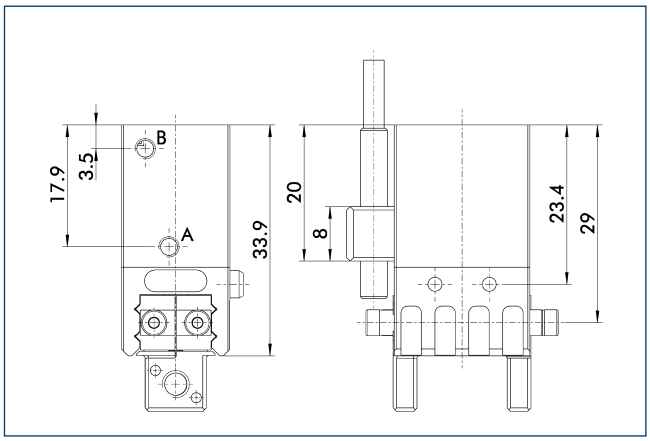

The mechanical maintenance of gripping force also assures a minimum gripping force in the case of a loss of pressure. With the AS / S variant, this acts as a closing force, and as an opening force for the IS variant. The maintenance of gripping force element can also be used as a means for increasing gripping force or for single actuated gripping.

Jaw design

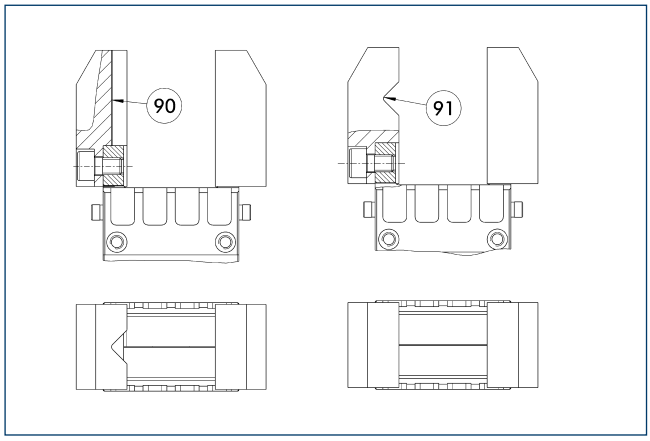

90 Vertical prism 91 Horizontal prism

A three-point support of the gripped workpiece is beneficial for gripping the workpiece with repeat accuracy and process reliability. More than three support points lead to a redundancy of the system. The drawing shows two alternative recommendations for the jaw design for coaxial and radial gripping of a cylindrical part.

Flexible position sensor

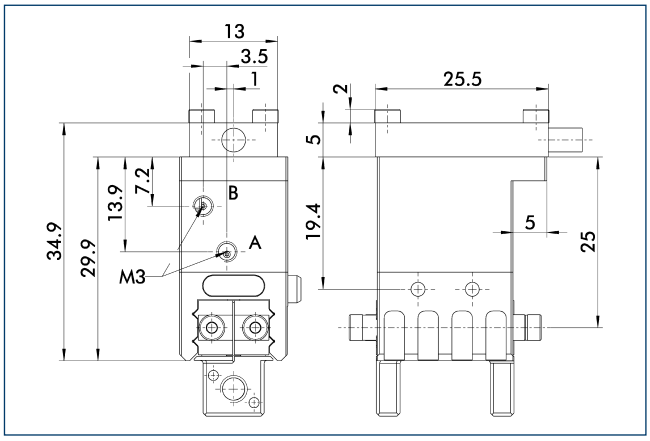

The following FPS position sensor can differentiate between five programmable areas and/or switching points for the stroke of a gripper, and can be used in combination with a PC as a measuring system.

Adapter plate

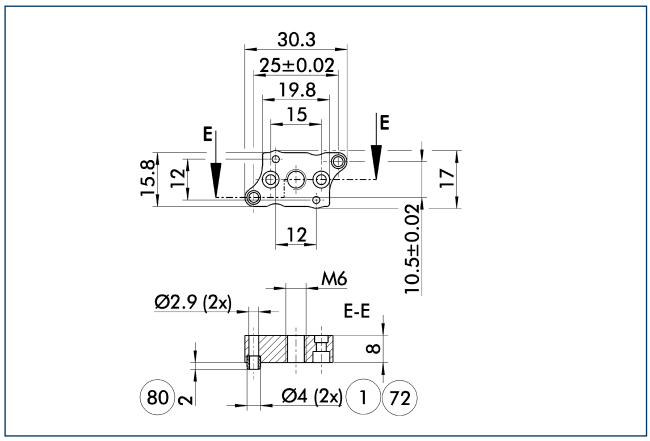

(1) Gripper connection
(72) Fit for centering sleeves
(80) Depth of the centering sleeve hole in the mating part

The adapter plate includes O-rings* for a hose-free direct connection, additional centering sleeves and screws for mounting the gripper.
*Only used with pneumatic actuators.

Description	ID	
Adapter plate		
APL-MPG-plus 20	0305497	

ⓘ The adapter plate is a separately ordered, optional accessory.

SDV-P pressure maintenance valve

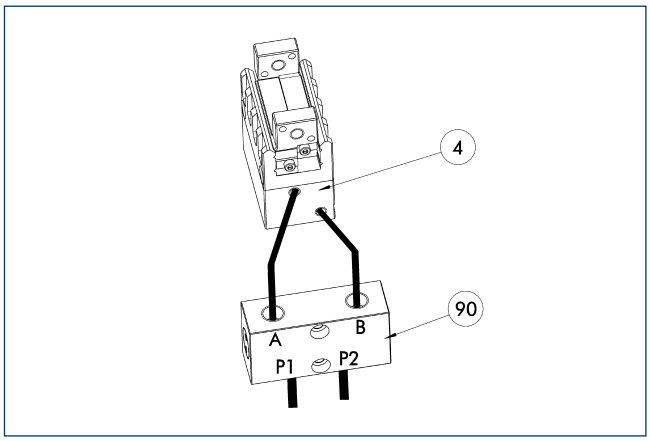

(4) Gripper
(90) SDV-P pressure maintenance valve

The SDV-P pressure maintenance valves ensure that the pressure in the piston chamber of pneumatic gripping, rotary, linear, and quick-change modules is maintained temporarily during an emergency stop.

Description	ID	
Pressure maintenance valve		
SDV-P 04	0403130	

Adapter plate

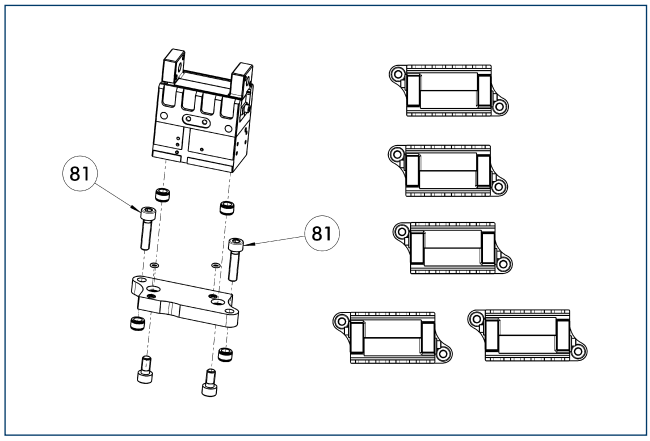

(81) Not included in the scope of delivery

The adapter plate includes O-rings* for a hose-free direct connection, additional centering sleeves and screws for mounting the gripper.
*Only used with pneumatic actuators.

Description	ID	
Adapter plate		
APL-MPG-plus 20	0305497	

ⓘ The adapter plate is a separately ordered, optional accessory.

Finger blanks with BSWS ABR-BSWS-MPG-plus 20

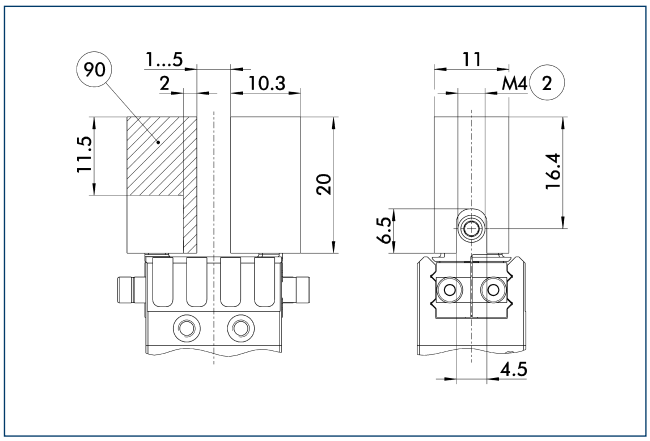

(2) Finger connection
(90) Machining volume

Finger blanks for customized subsequent machining with integrated jaw quick-change system for precise and fast finger changes.

Description	ID	
Finger blanks with jaw quick-change system		
ABR-BSWS-MPG-plus 20	0302893	

Finger blanks with BSWS

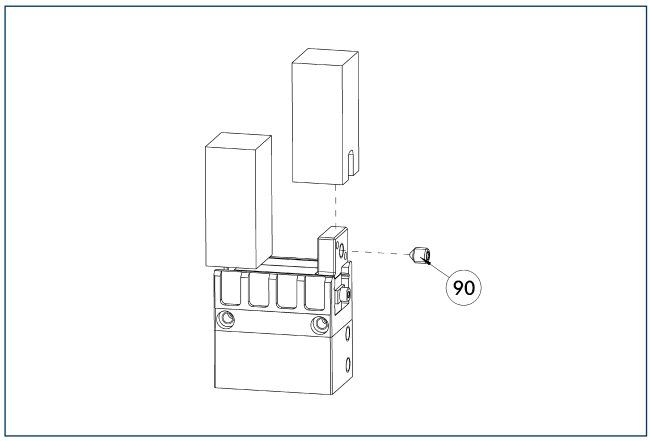

(90) Included in the jaw quick-change system's scope of delivery

The top jaw blanks with jaw quick-change system allow for fast and manual top jaw change on the gripper and already have the mechanical interface to the gripper. All the customer needs to do is integrate the workpiece-specific geometry into the blank.

Description	ID	
Finger blanks with jaw quick-change system		
ABR-BSWS-MPG-plus 20	0302893	

ABR-MPG-plus 20 finger blanks

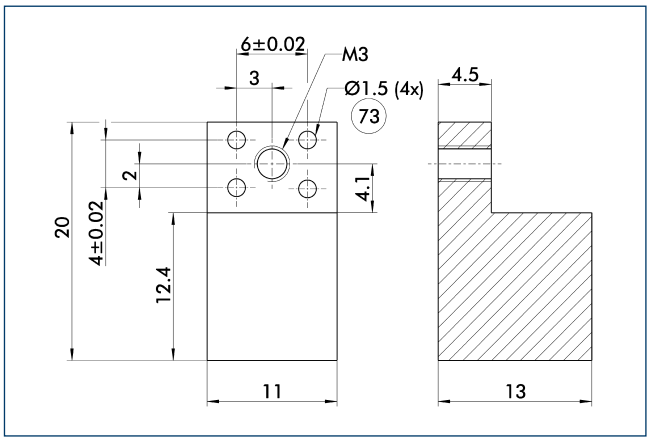

(73) Fit for centering pins

Finger blanks for customized subsequent machining.

Description	ID	Material	Scope of delivery
Finger blanks			
ABR-MPG-plus 20	0340210	Aluminum	2

Attachment valves

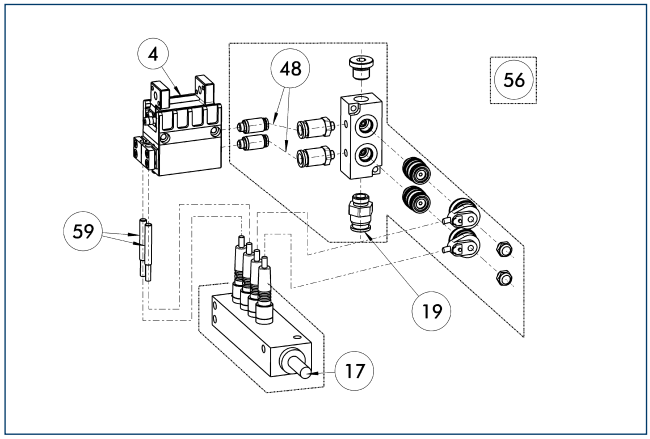

(4) Gripper
(17) Cable outlet
(19) Air connection
(48) Hose
(56) Included in delivery
(59) Monitoring gripping

For each unit one attachment valve ABV is required, optional with distributor for sensors and valves. Attachment valves increase the efficiency, reduce the installation work and air consumption and simplify air supply. For details please refer to the "Accessories" catalog section.

Description	ID	Often combined
Attachment valves		
ABV-MV15-S2-M5	0303375	
ABV-MV15-S2-M5-V2-M8	0303376	
ABV-MV15-S2-M5-V4-M8	0303377	●
ABV-MV15-S2-M5-V8-M8	0303378	

Modular assembly automation

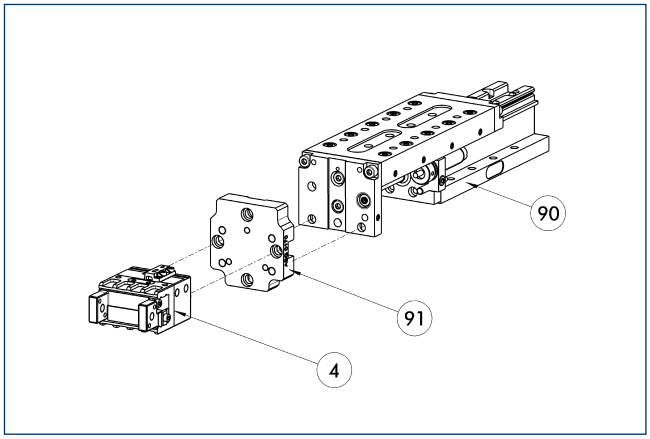

(4) Gripper
(90) CLM / KLM / LM / ELM / ELS / HLM linear module
(91) ASG adapter plate

Gripper and linear modules can be combined with standard adapters out of the modular assembly system. For more information see our catalog "Modular Assembly Automation".

Inductive proximity switches

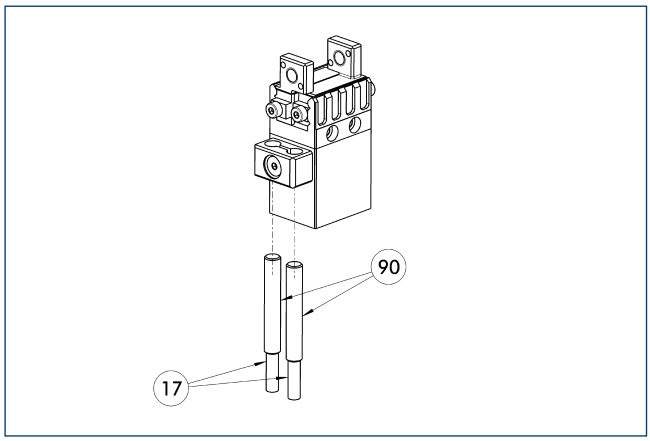

17 Cable outlet
90 IN ... sensor

Description	ID	Often combined
Inductive proximity switches		
IN 40-S-M12	0301574	
IN 40-S-M8	0301474	●
INK 40-S	0301555	
Cable extensions		
KV BG12-SG12 3P-0030-PNP	0301999	
KV BG12-SG12 3P-0060-PNP	0301998	
KV BW08-SG08 3P-0030-PNP	0301495	
KV BW08-SG08 3P-0100-PNP	0301496	
KV BW08-SG08 3P-0200-PNP	0301497	●
KV BW12-SG12 3P-0030-PNP	0301595	
KV BW12-SG12 3P-0100-PNP	0301596	
KV BW12-SG12 3P-0200-PNP	0301597	
Clip for plug / socket		
CLI-M12	0301464	
CLI-M8	0301463	
Connection cables		
KA BG08-L 3P-0300-PNP	0301622	●
KA BG08-L 3P-0500-PNP	0301623	
KA BG12-L 3P-0500-PNP	30016369	
KA BW08-L 3P-0300-PNP	0301594	
KA BW08-L 3P-0500-PNP	0301502	
KA BW12-L 3P-0300-PNP	0301503	
KA BW12-L 3P-0500-PNP	0301507	
Sensor distributor		
V2-M8	0301775	●
V2-M12	0301776	●
V4-M12	0301747	
V4-M8	0301746	
V8-M12	0301752	
V8-M8	0301751	

ⓘ Two sensors (closer/S) are required for each unit, plus extension cables as an option. Please note the minimum permitted bending radii for the sensor cables, which are generally 35 mm.

Flexible position sensor

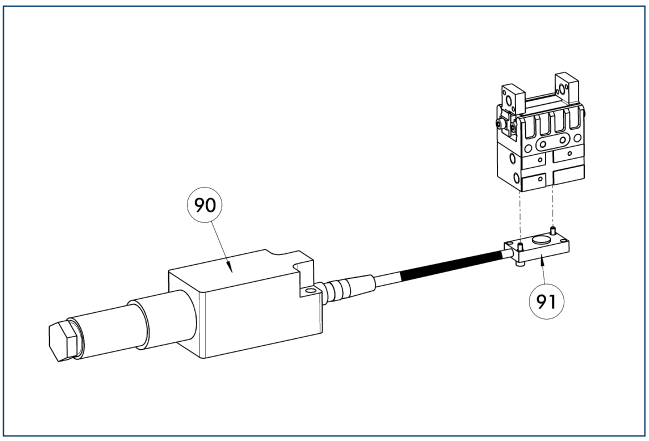

90 FPS-F5 / -F5 T electronic processor
91 FPS-S sensor

The FPS monitoring is only possible for this size in combination with the appropriate FPS variant of the gripper.

Description	ID	Often combined
Sensor		
FPS-S 13	0301705	
Electronic processor		
FPS-F5	0301805	●
FPS-F5 T	0301807	

ⓘ When using a FPS system, a FPS sensor (FPS-S) and a control unit (FPS-F5 / F5 T) are required for each gripper as well as a mounting kit (AS), if listed. Cable extensions (KV) are available as options in the "Accessories" catalog section.

MPG-plus 25

SCHUNK Grippers pneumatic | 2-Finger Parallel Grippers | Miniature Parallel Gripper

Gripping force, O.D. gripping

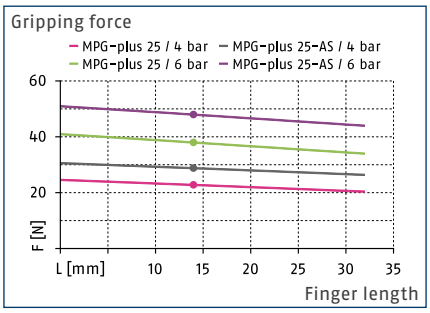

Gripping force, I.D. gripping

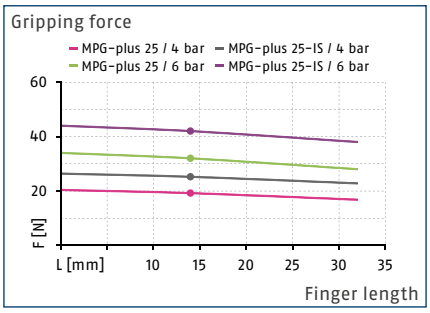

Finger load

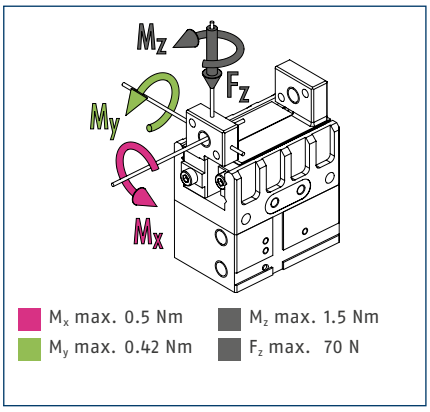

ⓘ The indicated moments and forces are static values, apply per base jaw and may occur simultaneously. M_y may arise in addition to the moment generated by the gripping force itself. If the max. permitted finger weight is exceeded, it is impreative to throttle the air supply so that the jaw movement occurs without any hitting or bouncing. Service life may be reduced.

Technical data

Description		MPG-plus 25	MPG-plus 25-AS	MPG-plus 25-IS	MPG-plus 25 FPS
ID		0305501	0305502	0305503	0305504
Stroke per jaw	[mm]	3	3	3	3
Closing- / opening force	[N]	38/32	48/-	-/41	38/32
min. spring force	[N]		10	9	
Weight	[kg]	0.06	0.07	0.07	0.06
Recommended workpiece weight	[kg]	0.19	0.19	0.19	0.19
Fluid consumption per double stroke	[cm³]	0.8	2.5	2	0.8
min. / max. operating pressure	[bar]	2/8	4/6.5	4/6.5	2/8
Nominal operating pressure	[bar]	6	6	6	6
Closing- / opening time	[s]	0.017/0.017	0.017/0.033	0.033/0.017	0.017/0.017
Closing- / opening time only with spring	[s]		0.10	0.10	
max. permitted finger length	[mm]	32	32	32	32
max. permitted weight per finger	[kg]	0.02	0.02	0.02	0.02
IP class		30	30	30	30
min. / max. ambient temperature	[°C]	5/90	5/90	5/90	5/90
Repeat accuracy	[mm]	0.02	0.02	0.02	0.02
Options and their characteristics					
High-temperature version		39305501	39305502	39305503	39305504
min. / max. ambient temperature	[°C]	5/100	5/100	5/100	5/100
Precision version		0305506	0305508	0305509	

Main view

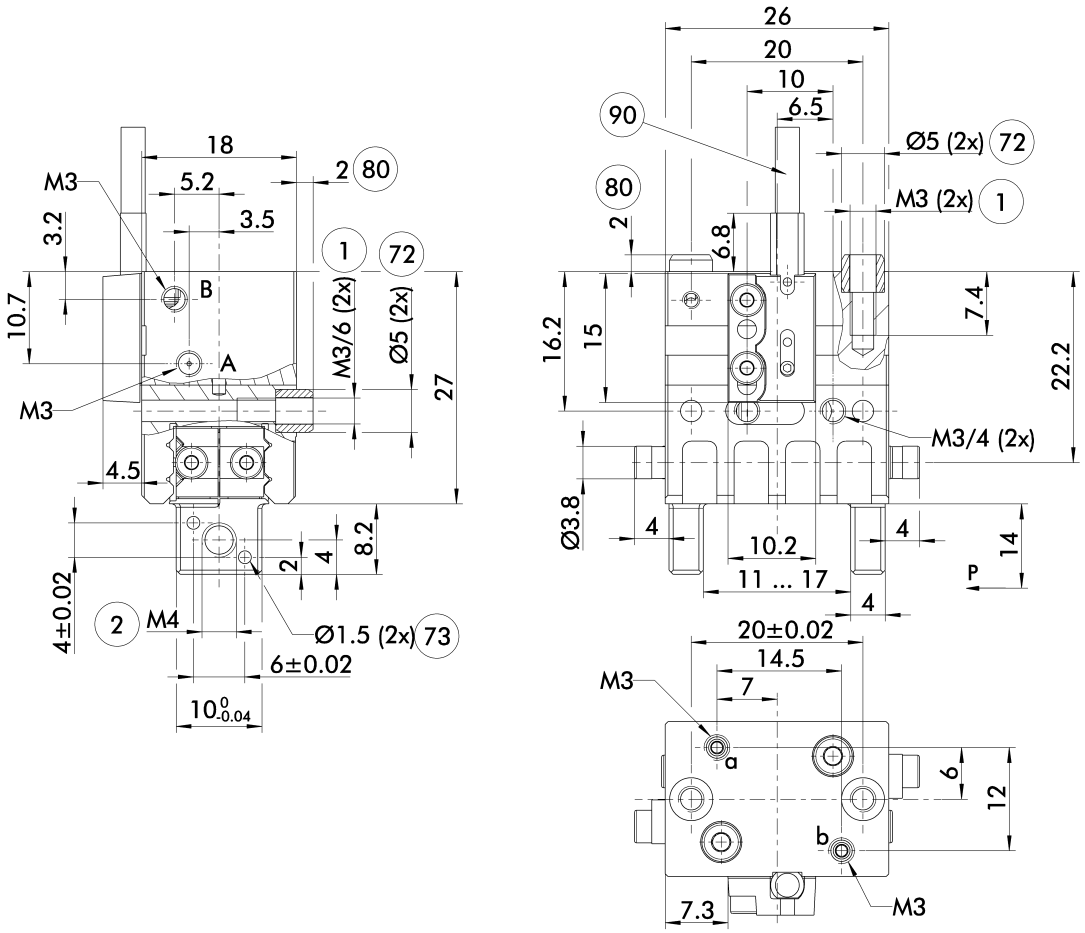

The drawing shows the basic version of the gripper with open jaws, without dimensional consideration of the options described below.

ⓘ The SDV-P pressure maintenance valve can also be used for I.D. or O.D. gripping alternatively or in addition to the spring-loaded, mechanical gripping force maintenance device (see catalog section on "Accessories").

A, a Main / direct connection, gripper opening

B, b Main / direct connection, gripper closing

(1) Gripper connection

(2) Finger connection

(72) Fit for centering sleeves

(73) Fit for centering pins

(80) Depth of the centering sleeve hole in the mating part

(90) MMS-P

Maximum permitted finger projection

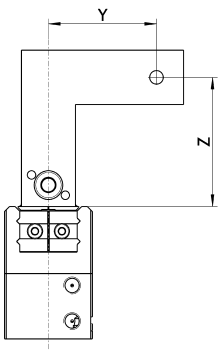

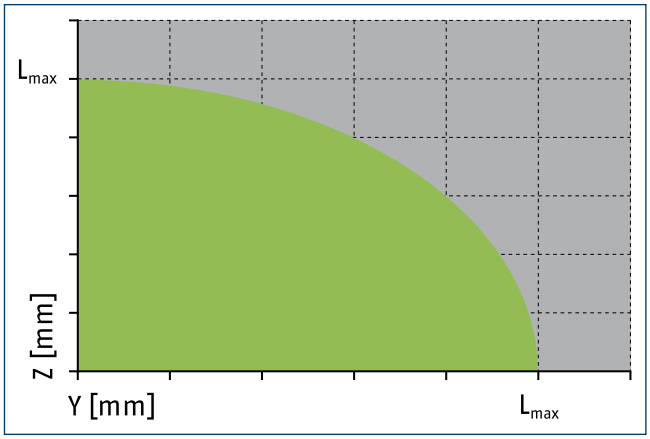

Permitted range

Inadmissible range

L_{max} is equivalent to the maximum permitted finger length, see the chart of technical specifications.

Monitoring for stacked arrangement

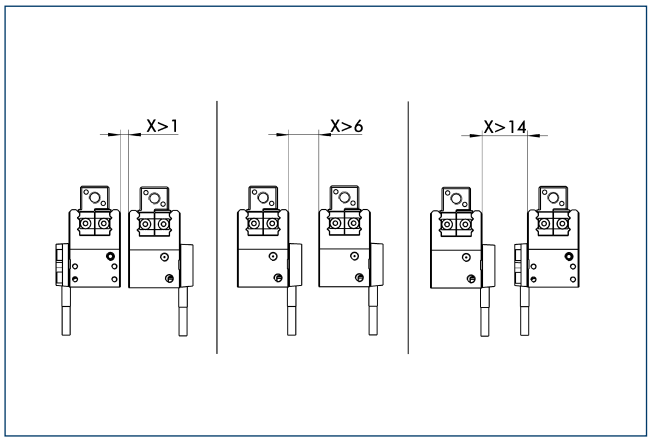

Caution: Monitoring is carried out by magnetic switches, and in case of side-by-side assembly of several units, a minimum distance of X mm between the units must be maintained.

Hose-free direct connection M3

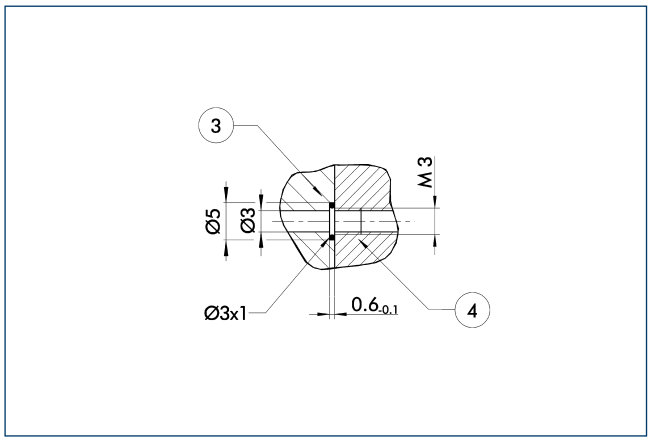

3 Adapter 4 Gripper

The direct connection is used for supplying compressed air without hoses. Instead, the pressure medium is fed through bore-holes in the mounting plate.

Gripping force maintenance device AS

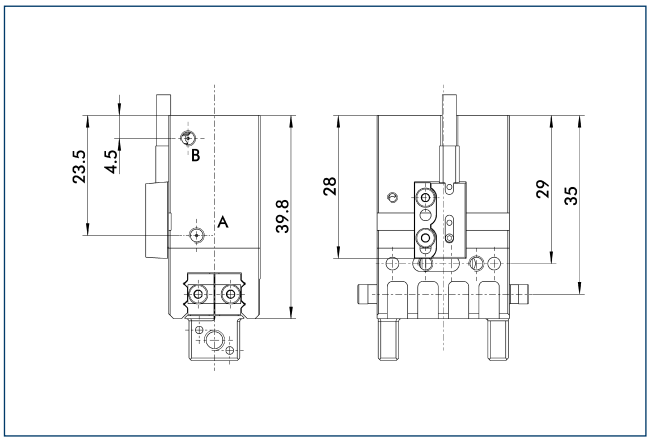

The mechanical maintenance of gripping force also assures a minimum gripping force in the case of a loss of pressure. With the AS / S variant, this acts as a closing force, and as an opening force for the IS variant. The maintenance of gripping force element can also be used as a means for increasing gripping force or for single actuated gripping.

Gripping force maintenance device IS

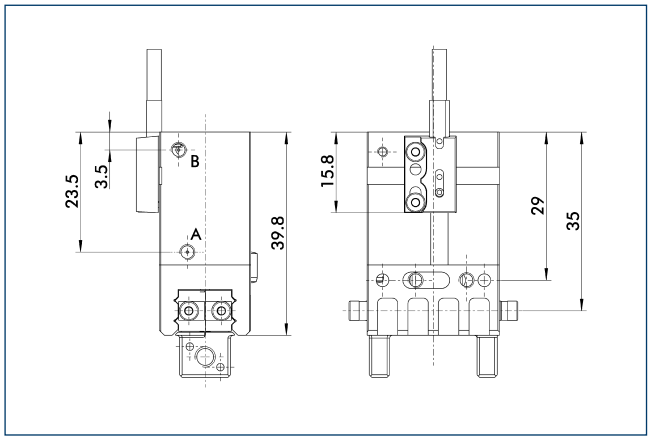

The mechanical maintenance of gripping force also assures a minimum gripping force in the case of a loss of pressure. With the AS / S variant, this acts as a closing force, and as an opening force for the IS variant. The maintenance of gripping force element can also be used as a means for increasing gripping force or for single actuated gripping.

Jaw design

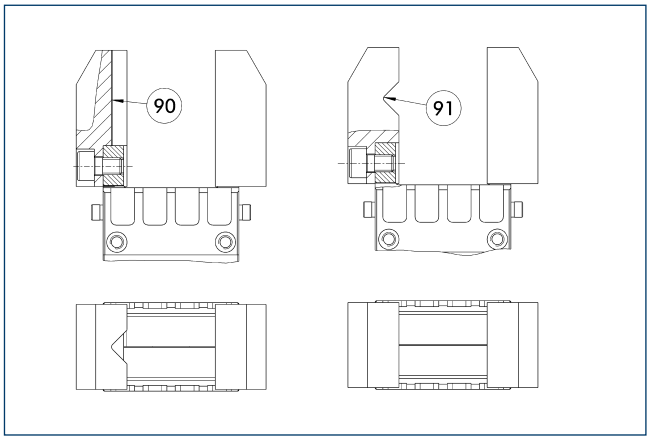

90 Vertical prism 91 Horizontal prism

A three-point support of the gripped workpiece is beneficial for gripping the workpiece with repeat accuracy and process reliability. More than three support points lead to a redundancy of the system. The drawing shows two alternative recommendations for the jaw design for coaxial and radial gripping of a cylindrical part.

Precision version

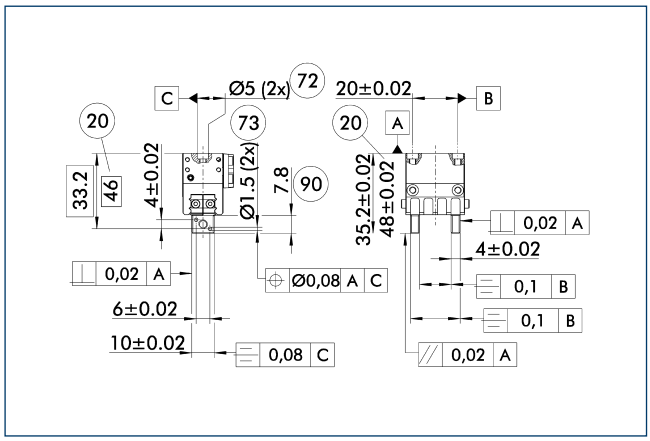

20 For AS / IS version
72 Fit for centering sleeves
73 Fit for centering pins
90 Length of the usable finger surface

The indicated tolerances just refer to the types of precision versions shown in the chart of technical specifications. All other types of precision versions are available on request.

Flexible position sensor

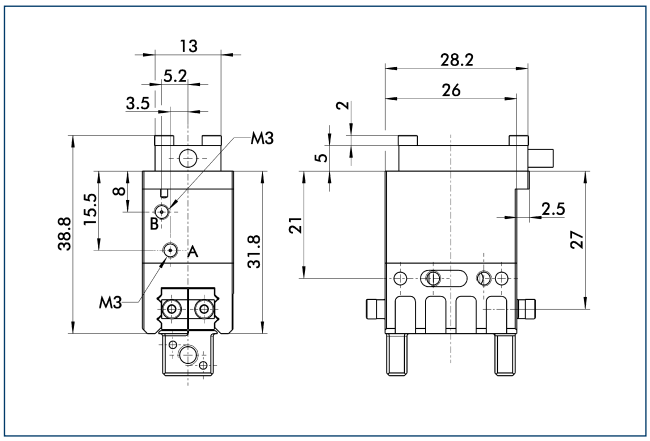

The following FPS position sensor can differentiate between five programmable areas and/or switching points for the stroke of a gripper, and can be used in combination with a PC as a measuring system.

Adapter plate

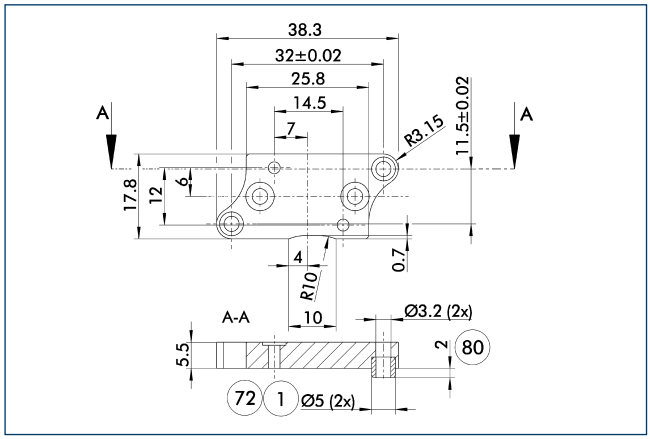

1 Gripper connection
72 Fit for centering sleeves
80 Depth of the centering sleeve hole in the mating part

The adapter plate includes O-rings* for a hose-free direct connection, additional centering sleeves and screws for mounting the gripper.
*Only used with pneumatic actuators.

Description	ID	
Adapter plate		
APL-MPG-plus 25	0305507	

ⓘ The adapter plate is a separately ordered, optional accessory.

SDV-P pressure maintenance valve

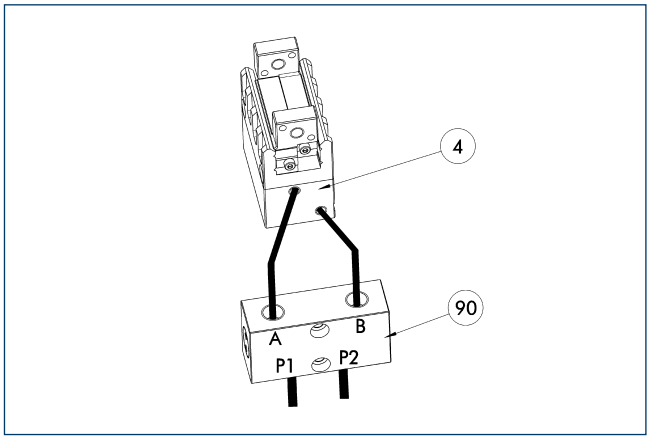

4 Gripper
90 SDV-P pressure maintenance valve

The SDV-P pressure maintenance valves ensure that the pressure in the piston chamber of pneumatic gripping, rotary, linear, and quick-change modules is maintained temporarily during an emergency stop.

Description	ID	
Pressure maintenance valve		
SDV-P 04	0403130	

Adapter plate

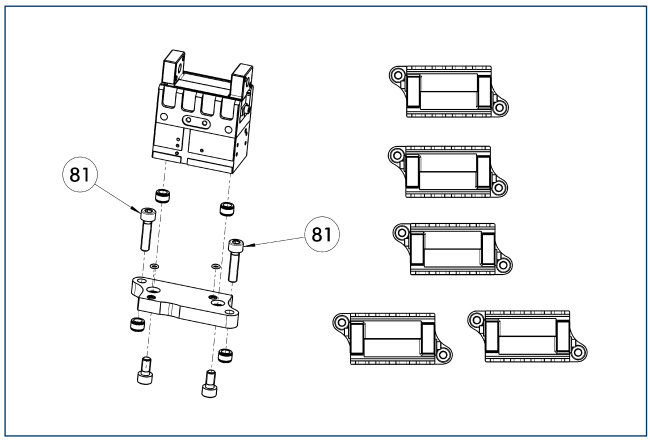

(81) Not included in the scope of delivery

The adapter plate includes O-rings* for a hose-free direct connection, additional centering sleeves and screws for mounting the gripper.
*Only used with pneumatic actuators.

Description	ID	
Adapter plate		
APL-MPG-plus 25	0305507	

ⓘ The adapter plate is a separately ordered, optional accessory.

Finger blanks with BSWS ABR-BSWS-MPG-plus 25

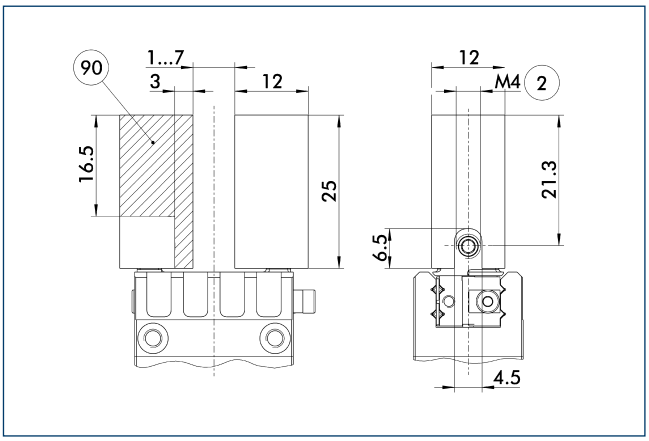

(2) Finger connection (90) Machining volume

Finger blanks for customized subsequent machining with integrated jaw quick-change system for precise and fast finger changes.

Description	ID	
Finger blanks with jaw quick-change system		
ABR-BSWS-MPG-plus 25	0302894	

Finger blanks with BSWS

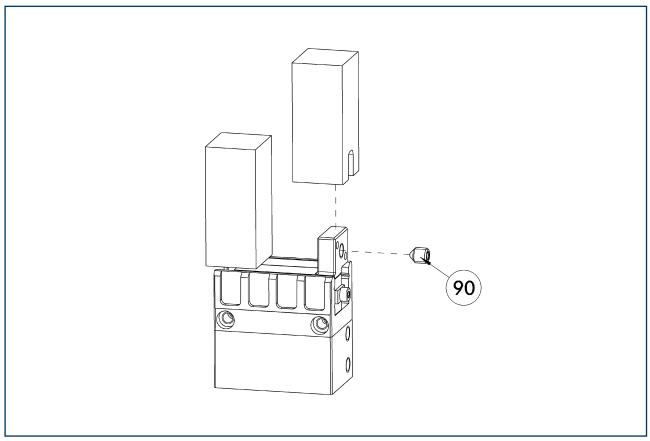

(90) Included in the jaw quick-change system's scope of delivery

The top jaw blanks with jaw quick-change system allow for fast and manual top jaw change on the gripper and already have the mechanical interface to the gripper. All the customer needs to do is integrate the workpiece-specific geometry into the blank.

Description	ID	
Finger blanks with jaw quick-change system		
ABR-BSWS-MPG-plus 25	0302894	

ABR-MPG-plus 25 finger blanks

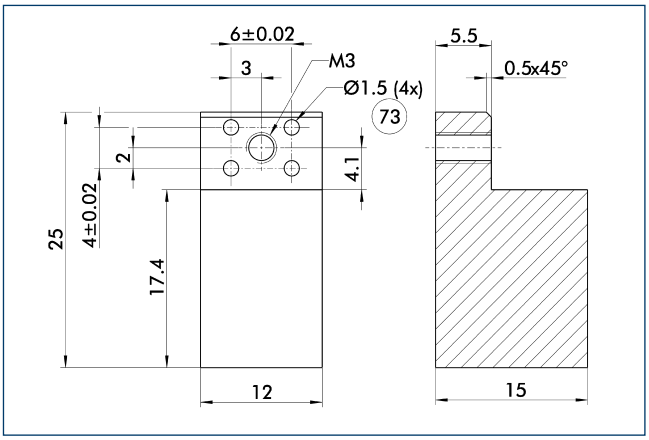

(73) Fit for centering pins

Finger blanks for customized subsequent machining.

Description	ID	Material	Scope of delivery
Finger blanks			
ABR-MPG-plus 25	0340211	Aluminum	2

OAS-MPG-plus 25 object distance sensor

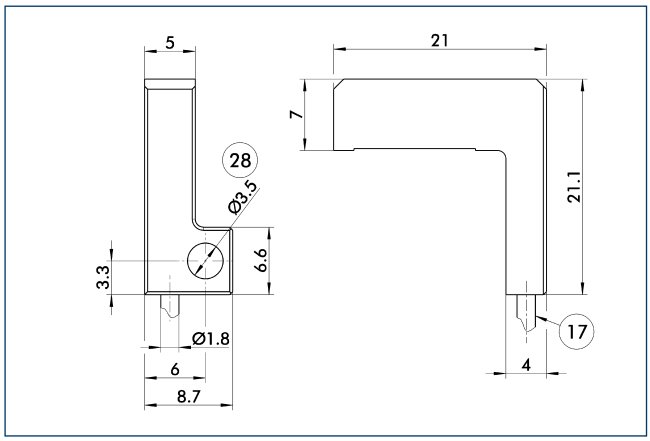

17 Cable outlet

28 Through-bore

Description	ID	
Object distance sensor		
OAS-MPG-plus 25	0308891	

Object distance sensor

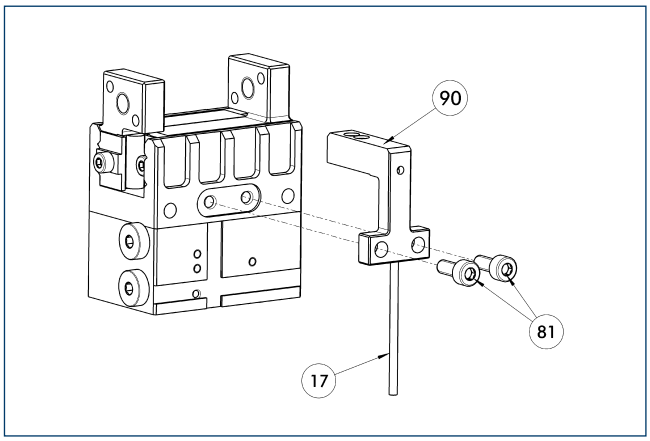

17 Cable outlet

90 OAS

81 Not included in the scope of delivery

Optical distance and presence sensor for direct mounting on the gripper. One OAS sensor per gripper can be assembled.

Description	ID	
Object distance sensor		
OAS-MPG-plus 25	0308891	
Electronic processor		
OAS-V09-D	0308865	
OAS-V10-A	0308867	
OAS-V10-D	0308866	

ⓘ The evaluation of the OAS can be done with either an analog or digital evaluation unit and with or without a display. The states which should be detected can be simply taught.

Attachment valves

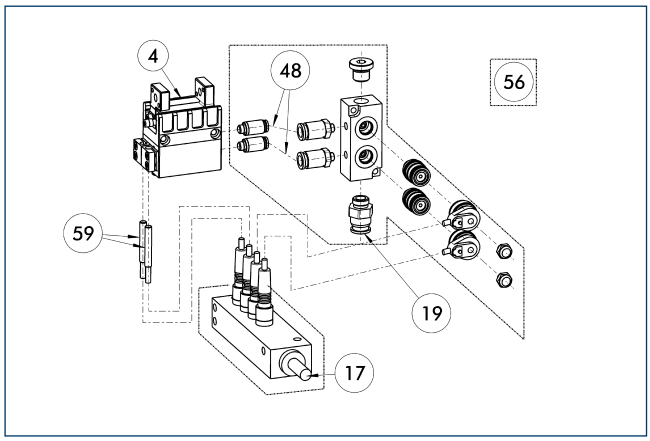

(4) Gripper
(48) Hose
(17) Cable outlet
(56) Included in delivery
(19) Air connection
(59) Monitoring gripping

For each unit one attachment valve ABV is required, optional with distributor for sensors and valves. Attachment valves increase the efficiency, reduce the installation work and air consumption and simplify air supply. For details please refer to the "Accessories" catalog section.

Description	ID	Often combined
Attachment valves		
ABV-MV15-S2-M5	0303375	
ABV-MV15-S2-M5-V2-M8	0303376	
ABV-MV15-S2-M5-V4-M8	0303377	●
ABV-MV15-S2-M5-V8-M8	0303378	

Modular assembly automation

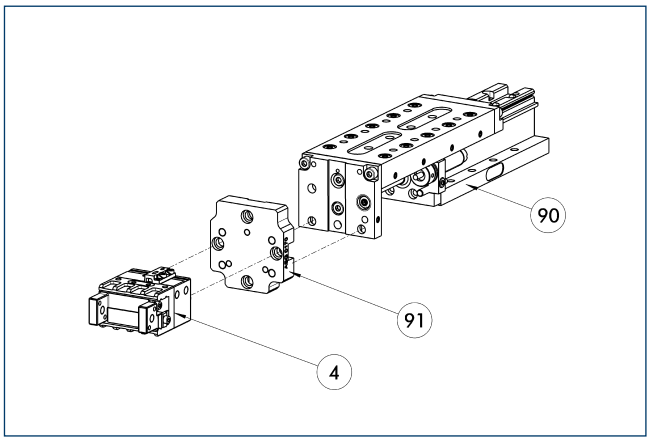

(4) Gripper
(91) ASG adapter plate
(90) CLM / KLM / LM / ELM / ELS / HLM linear module

Gripper and linear modules can be combined with standard adapters out of the modular assembly system. For more information see our catalog "Modular Assembly Automation".

Mounting kit for IN 40 proximity switches

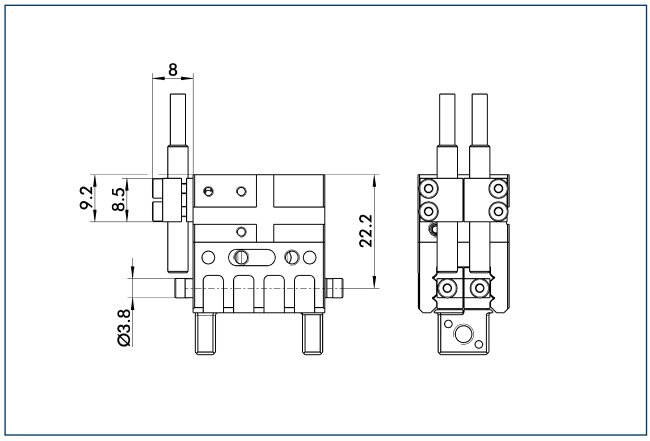

The mounting kit comprises mount, switching lug / cam and mounting screws. Proximity switches must be ordered separately.

Description	ID	
Mounting kit for proximity switch		
AS-IN40-MPG-plus 25	0305505	

ⓘ This mounting kit needs to be ordered optionally as an accessory.

IN 40 inductive proximity switches

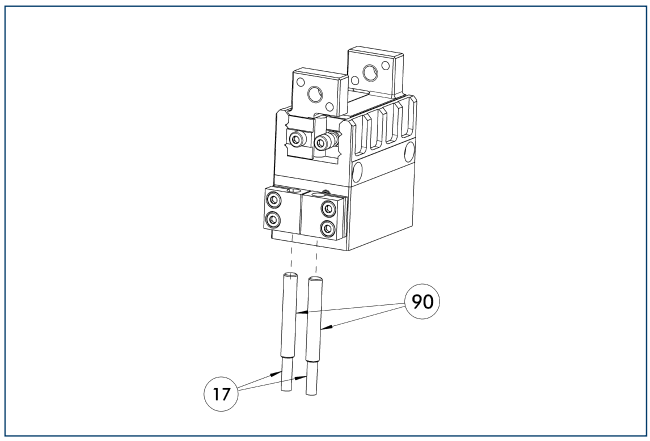

17 Cable outlet

90 IN ... sensor

Limit position monitor can be mounted with mounting kit.

Description	ID	Often combined
Mounting kit for proximity switch		
AS-IN40-MPG-plus 25	0305505	
Inductive proximity switches		
IN 40-S-M12	0301574	
IN 40-S-M8	0301474	●
INK 40-S	0301555	
Cable extensions		
KV BG12-SG12 3P-0030-PNP	0301999	
KV BG12-SG12 3P-0060-PNP	0301998	
KV BW08-SG08 3P-0030-PNP	0301495	
KV BW08-SG08 3P-0100-PNP	0301496	
KV BW08-SG08 3P-0200-PNP	0301497	●
KV BW12-SG12 3P-0030-PNP	0301595	
KV BW12-SG12 3P-0100-PNP	0301596	
KV BW12-SG12 3P-0200-PNP	0301597	
Clip for plug / socket		
CLI-M12	0301464	
CLI-M8	0301463	
Connection cables		
KA BG08-L 3P-0300-PNP	0301622	●
KA BG08-L 3P-0500-PNP	0301623	
KA BG12-L 3P-0500-PNP	30016369	
KA BW08-L 3P-0300-PNP	0301594	
KA BW08-L 3P-0500-PNP	0301502	
KA BW12-L 3P-0300-PNP	0301503	
KA BW12-L 3P-0500-PNP	0301507	
Sensor distributor		
V2-M8	0301775	●
V2-M12	0301776	●
V4-M12	0301747	
V4-M8	0301746	
V8-M12	0301752	
V8-M8	0301751	

ⓘ Two sensors (closer/S) are required for each unit, plus extension cables as an option. This mounting kit needs to be ordered optionally as an accessory. Please note the minimum permitted bending radii for the sensor cables, which are generally 35 mm.

Mounting kit for IN 5 proximity switches

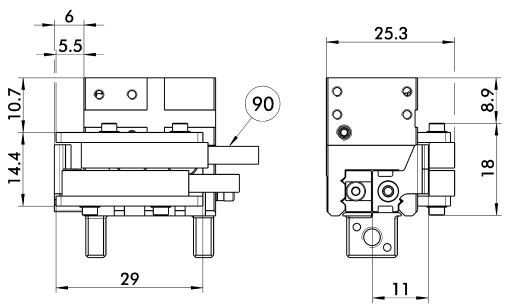

(90) IN ... sensor

The mounting kit comprises mount, switching lug / cam and mounting screws. Proximity switches must be ordered separately.

Description	ID	
Mounting kit for proximity switch		
AS-IN5-MPG-plus 25	0340150	

ⓘ This mounting kit needs to be ordered optionally as an accessory.

IN 5 inductive proximity switches

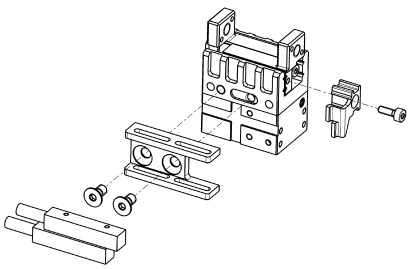

Limit position monitor can be mounted with mounting kit.

Description	ID	Often combined
Mounting kit for proximity switch		
AS-IN5-MPG-plus 25	0340150	
Inductive proximity switches		
IN 5-S-M12	0301569	
IN 5-S-M8	0301469	●
Cable extensions		
KV BG12-SG12 3P-0030-PNP	0301999	
KV BG12-SG12 3P-0060-PNP	0301998	
KV BW08-SG08 3P-0030-PNP	0301495	
KV BW08-SG08 3P-0100-PNP	0301496	
KV BW08-SG08 3P-0200-PNP	0301497	●
KV BW12-SG12 3P-0030-PNP	0301595	
KV BW12-SG12 3P-0100-PNP	0301596	
KV BW12-SG12 3P-0200-PNP	0301597	
Clip for plug / socket		
CLI-M12	0301464	
CLI-M8	0301463	
Connection cables		
KA BG08-L 3P-0300-PNP	0301622	●
KA BG08-L 3P-0500-PNP	0301623	
KA BG12-L 3P-0500-PNP	30016369	
KA BW08-L 3P-0300-PNP	0301594	
KA BW08-L 3P-0500-PNP	0301502	
KA BW12-L 3P-0300-PNP	0301503	
KA BW12-L 3P-0500-PNP	0301507	
Sensor distributor		
V2-M8	0301775	●
V2-M12	0301776	●
V4-M12	0301747	
V4-M8	0301746	
V8-M12	0301752	
V8-M8	0301751	

ⓘ Two sensors (closer/S) are required for each unit, plus extension cables as an option. This mounting kit needs to be ordered optionally as an accessory. Please note the minimum permitted bending radii for the sensor cables, which are generally 35 mm.

Flexible position sensor

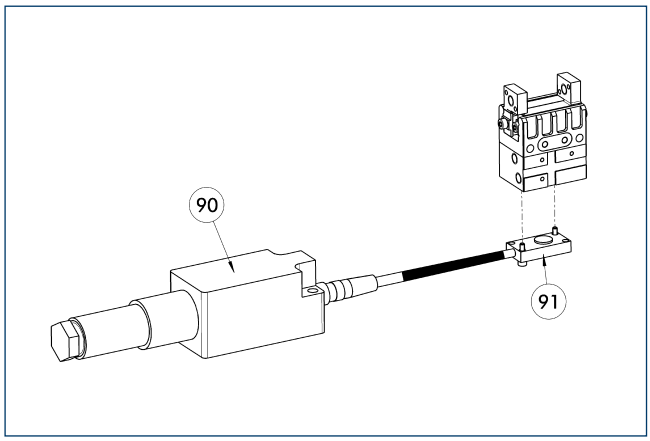

(90) FPS-F5 / -F5 T electronic processor

(91) FPS-S sensor

The FPS monitoring is only possible for this size in combination with the appropriate FPS variant of the gripper.

Description	ID	Often combined
Sensor		
FPS-S 13	0301705	
Electronic processor		
FPS-F5	0301805	●
FPS-F5 T	0301807	

ⓘ When using a FPS system, a FPS sensor (FPS-S) and a control unit (FPS-F5 / F5 T) are required for each gripper as well as a mounting kit (AS), if listed. Cable extensions (KV) are available as options in the "Accessories" catalog section.

MMS-P programmable magnetic switches

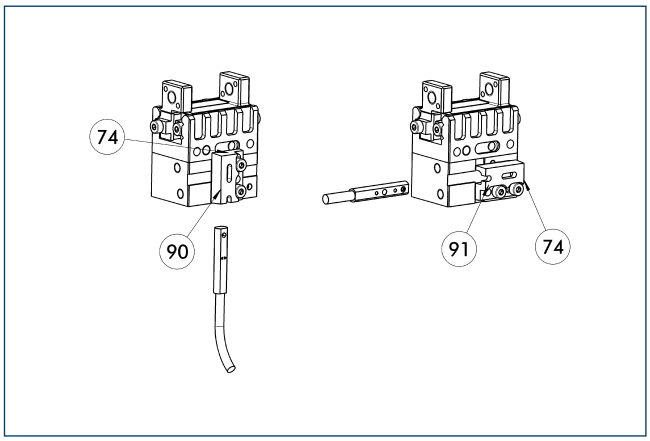

(74) Stop for MMS-P

(90) Vertical mounting of the sensor bracket

(91) Horizontal mounting of the sensor bracket

Position monitoring with two programmable positions per sensor. The end position monitoring is mounted in the C-slot.

Description	ID	Often combined
MMS-P programmable magnetic switches		
MMSK-P 22-S-PNP	0301371	
MMS-P 22-S-M8-PNP	0301370	●
Clip for plug / socket		
CLI-M8	0301463	
Connection cables		
KA BG08-L 4P-0500	0307767	●
KA BG08-L 4P-1000	0307768	
KA BW08-L 4P-0500	0307765	
KA BW08-L 4P-1000	0307766	
Sensor distributor		
V2-M8-4P-2XM8-3P	0301380	

ⓘ Is delivered with the sensor bracket (90) mounted in the vertical orientation. To use the sensor in a horizontal orientation, the sensor bracket can be horizontally assembled (91). The mounting bracket has an internal stop for the MMS-P sensor (74).

MMS-A analog position sensor

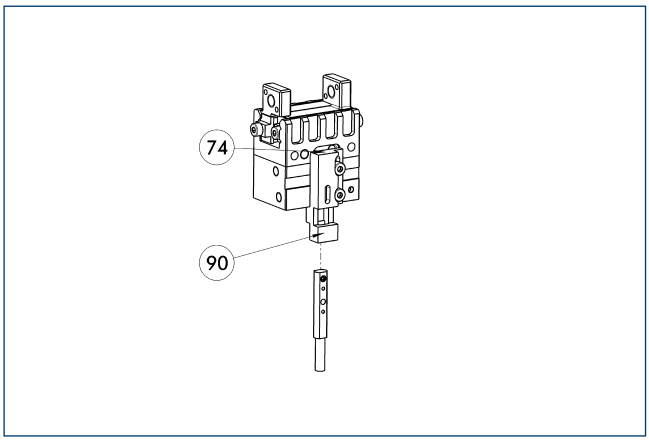

74 Stop for MMS-P

90 Vertical mounting of the sensor bracket

Contactlessly measuring, analog multi-position monitoring for any number of positions.

Description	ID	
Analog position sensor		
MMS 22-A-05V-M08	0315800	
MMS 22-A-10V-M08	0315820	

ⓘ One sensor is needed for each gripper. No additional mounting kit is needed – the standard gripper is equipped for use of the MMS-A.

MPG-plus 32

SCHUNK Grippers pneumatic | 2-Finger Parallel Grippers | Miniature Parallel Gripper

Gripping force, O.D. gripping

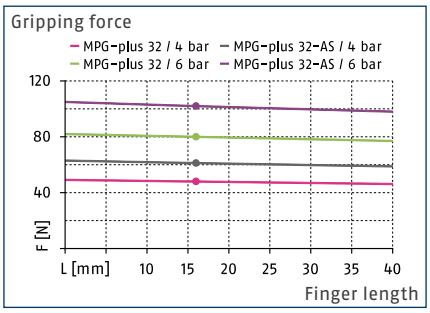

Gripping force, I.D. gripping

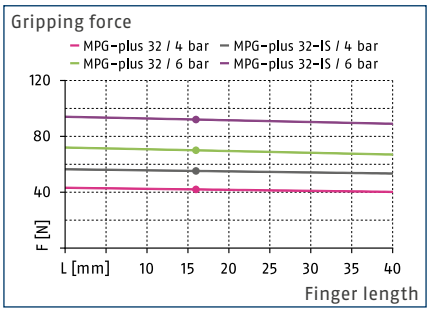

Finger load

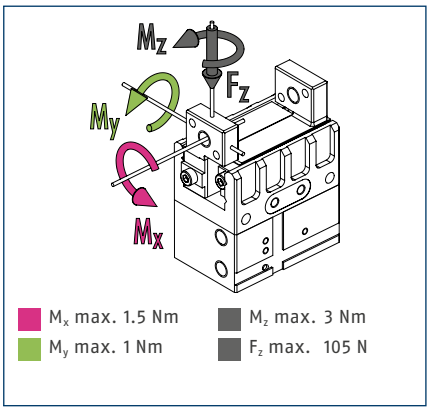

ⓘ The indicated moments and forces are static values, apply per base jaw and may occur simultaneously. M_y may arise in addition to the moment generated by the gripping force itself. If the max. permitted finger weight is exceeded, it is impreative to throttle the air supply so that the jaw movement occurs without any hitting or bouncing. Service life may be reduced.

Technical data

Description		MPG-plus 32	MPG-plus 32-AS	MPG-plus 32-IS	MPG-plus 32 FPS
ID		0305511	0305512	0305513	0305514
Stroke per jaw	[mm]	4	4	4	4
Closing- / opening force	[N]	80/70	105/-	-/90	80/70
min. spring force	[N]		25	20	
Weight	[kg]	0.1	0.13	0.13	0.13
Recommended workpiece weight	[kg]	0.43	0.43	0.43	0.43
Fluid consumption per double stroke	[cm³]	1.7	4.1	3.5	1.7
min. / max. operating pressure	[bar]	2/8	4/6.5	4/6.5	2/8
Nominal operating pressure	[bar]	6	6	6	6
Closing- / opening time	[s]	0.02/0.02	0.03/0.04	0.04/0.03	0.02/0.02
Closing- / opening time only with spring	[s]		0.20	0.20	
max. permitted finger length	[mm]	40	40	40	40
max. permitted weight per finger	[kg]	0.04	0.04	0.04	0.04
IP class		30	30	30	30
min. / max. ambient temperature	[°C]	5/90	5/90	5/90	5/90
Repeat accuracy	[mm]	0.02	0.02	0.02	0.02
Options and their characteristics					
High-temperature version		39305511	39305512	39305513	39305514
min. / max. ambient temperature	[°C]	5/100	5/100	5/100	5/100
Precision version		0305516	0305518	0305518	

Main view

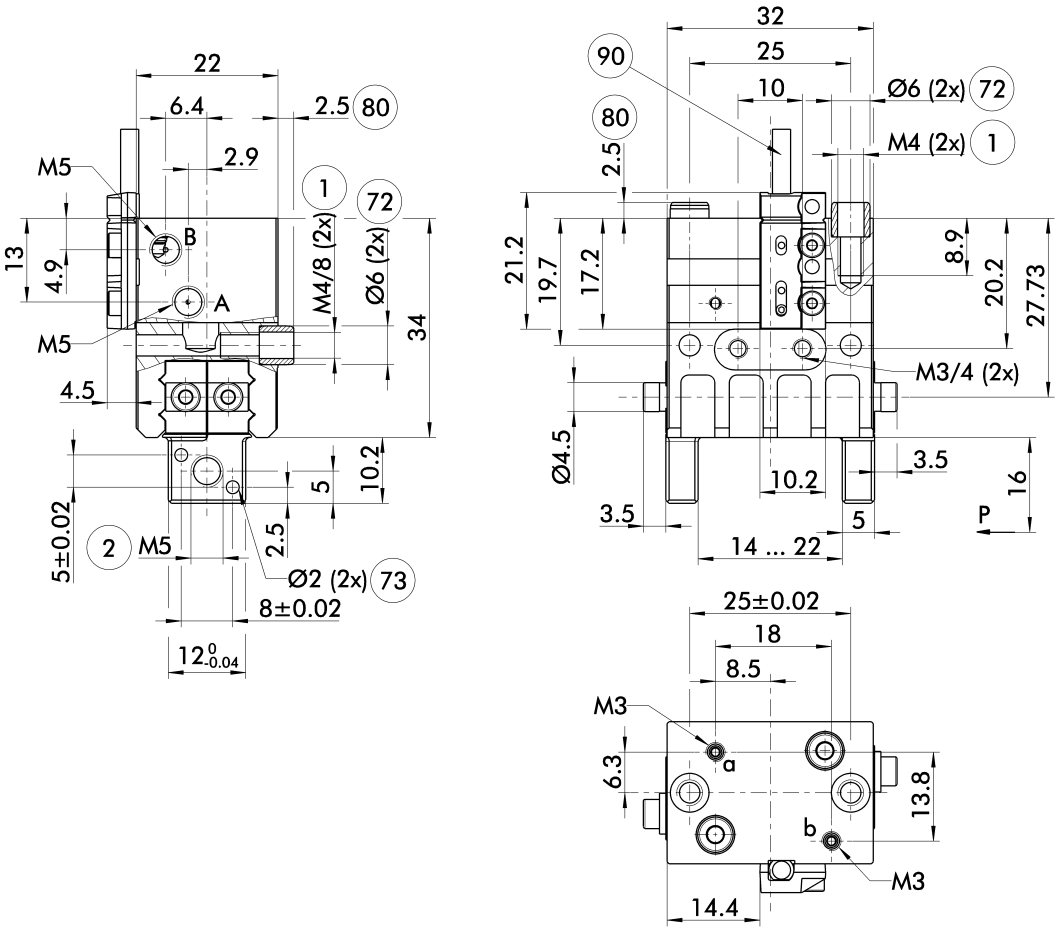

The drawing shows the basic version of the gripper with open jaws, without dimensional consideration of the options described below.

ⓘ The SDV-P pressure maintenance valve can also be used for I.D. or O.D. gripping alternatively or in addition to the spring-loaded, mechanical gripping force maintenance device (see catalog section on "Accessories").

A, a Main / direct connection, gripper opening

B, b Main / direct connection, gripper closing

(1) Gripper connection

(2) Finger connection

(72) Fit for centering sleeves

(73) Fit for centering pins

(80) Depth of the centering sleeve hole in the mating part

(90) MMS-P

Maximum permitted finger projection

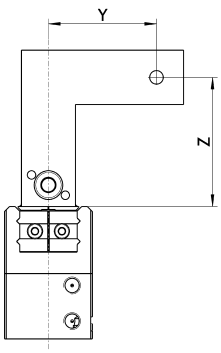

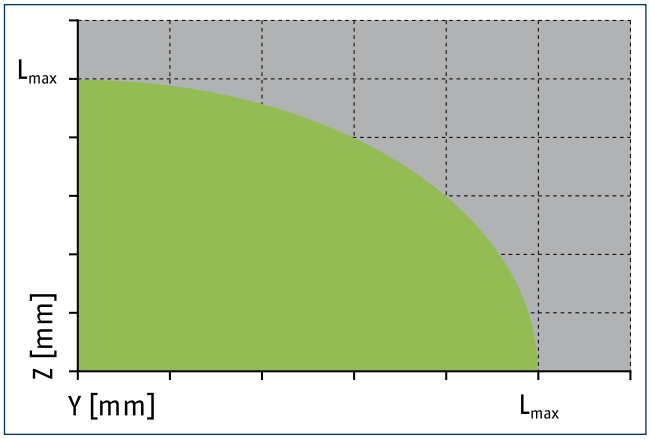

Permitted range

Inadmissible range

L_{max} is equivalent to the maximum permitted finger length, see the chart of technical specifications.

Monitoring for stacked arrangement

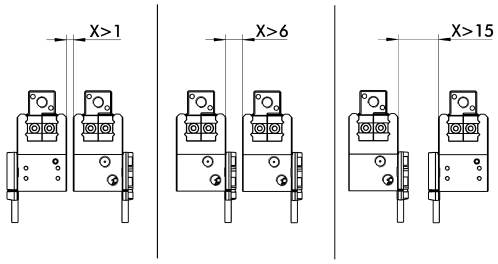

Caution: Monitoring is carried out by magnetic switches, and in case of side-by-side assembly of several units, a minimum distance of X mm between the units must be maintained.

Hose-free direct connection M3

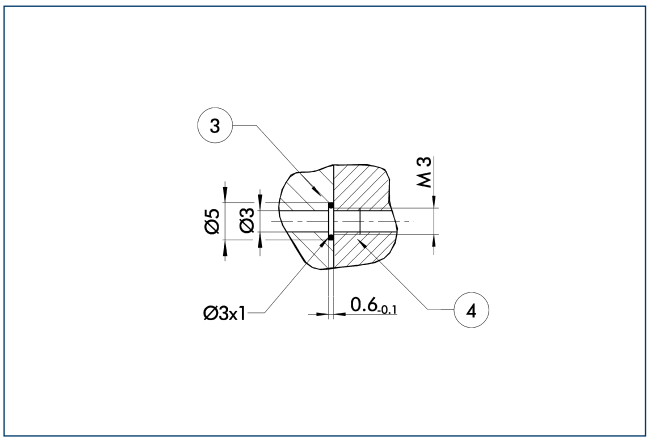

3 Adapter 4 Gripper

The direct connection is used for supplying compressed air without hoses. Instead, the pressure medium is fed through bore-holes in the mounting plate.

Gripping force maintenance device AS

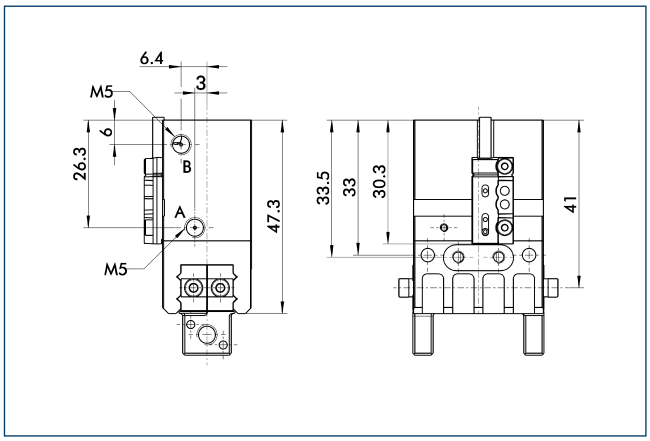

The mechanical maintenance of gripping force also assures a minimum gripping force in the case of a loss of pressure. With the AS / S variant, this acts as a closing force, and as an opening force for the IS variant. The maintenance of gripping force element can also be used as a means for increasing gripping force or for single actuated gripping.

Gripping force maintenance device IS

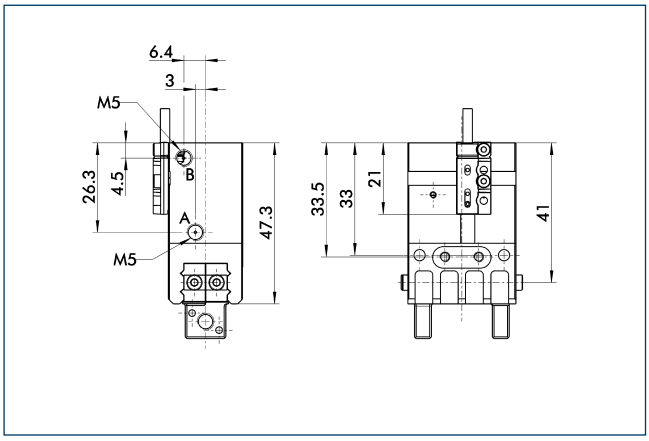

The mechanical maintenance of gripping force also assures a minimum gripping force in the case of a loss of pressure. With the AS / S variant, this acts as a closing force, and as an opening force for the IS variant. The maintenance of gripping force element can also be used as a means for increasing gripping force or for single actuated gripping.

Jaw design

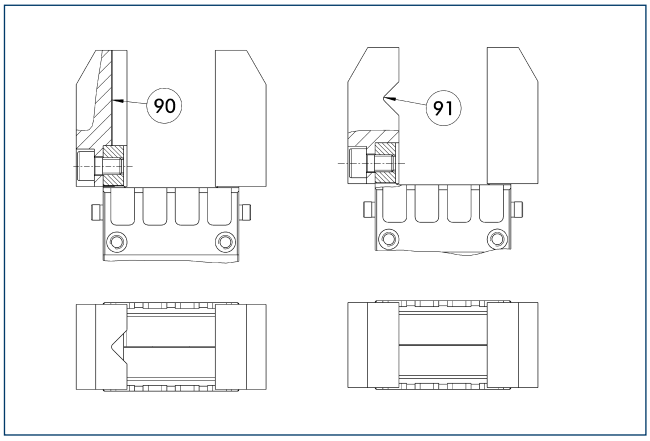

90 Vertical prism 91 Horizontal prism

A three-point support of the gripped workpiece is beneficial for gripping the workpiece with repeat accuracy and process reliability. More than three support points lead to a redundancy of the system. The drawing shows two alternative recommendations for the jaw design for coaxial and radial gripping of a cylindrical part.

Precision version

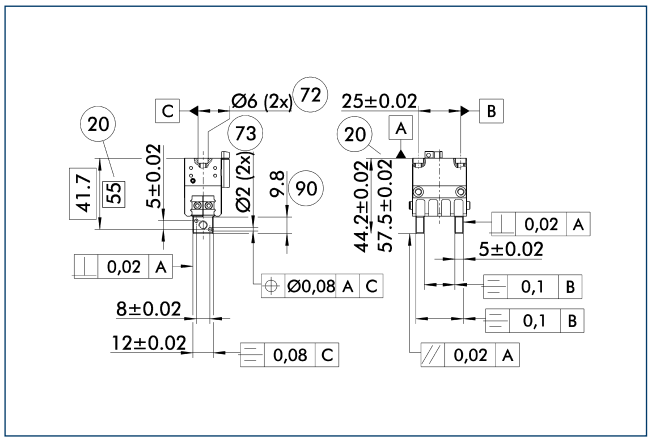

(20) For AS / IS version
(72) Fit for centering sleeves
(73) Fit for centering pins
(90) Length of the usable finger surface

The indicated tolerances just refer to the types of precision versions shown in the chart of technical specifications. All other types of precision versions are available on request.

Flexible position sensor

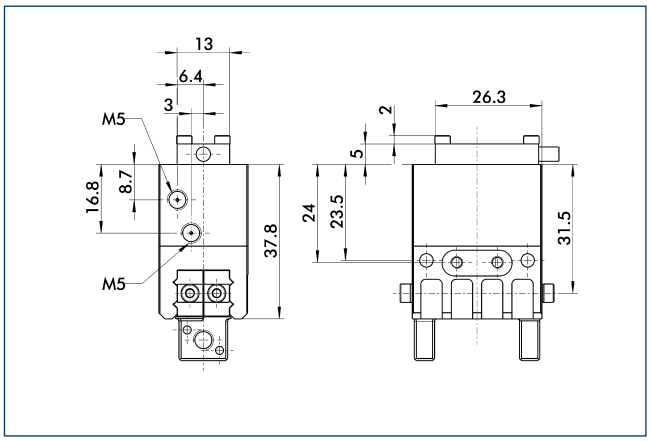

The following FPS position sensor can differentiate between five programmable areas and/or switching points for the stroke of a gripper, and can be used in combination with a PC as a measuring system.

Adapter plate

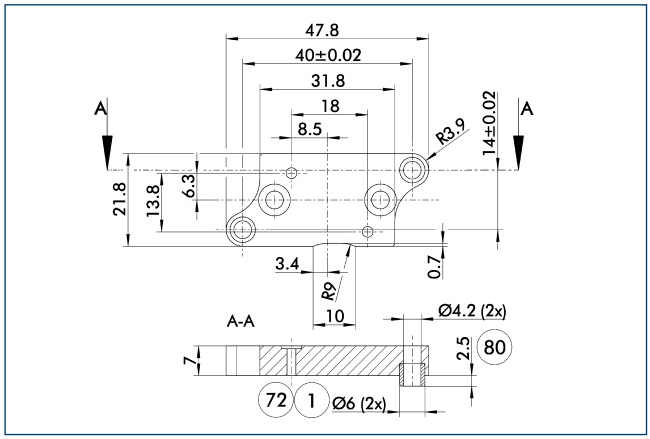

(1) Gripper connection
(72) Fit for centering sleeves
(80) Depth of the centering sleeve hole in the mating part

The adapter plate includes O-rings* for a hose-free direct connection, additional centering sleeves and screws for mounting the gripper.
*Only used with pneumatic actuators.

Description	ID	
Adapter plate		
APL-MPG-plus 32	0305517	

ⓘ The adapter plate is a separately ordered, optional accessory.

SDV-P pressure maintenance valve

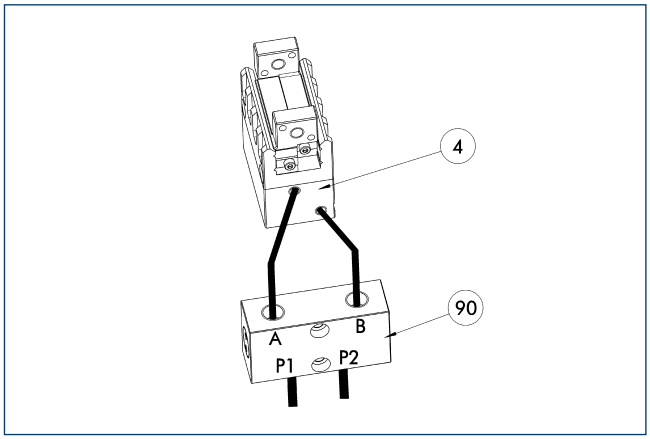

(4) Gripper
(90) SDV-P pressure maintenance valve

The SDV-P pressure maintenance valves ensure that the pressure in the piston chamber of pneumatic gripping, rotary, linear, and quick-change modules is maintained temporarily during an emergency stop.

Description	ID	
Pressure maintenance valve		
SDV-P 04	0403130	

Adapter plate

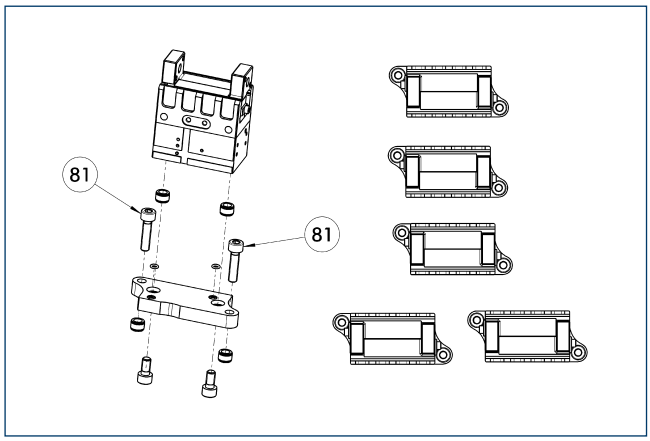

(81) Not included in the scope of delivery

The adapter plate includes O-rings* for a hose-free direct connection, additional centering sleeves and screws for mounting the gripper.
*Only used with pneumatic actuators.

Description	ID	
Adapter plate		
APL-MPG-plus 32	0305517	

ⓘ The adapter plate is a separately ordered, optional accessory.

Finger blanks with BSWS ABR-BSWS-MPG-plus 32

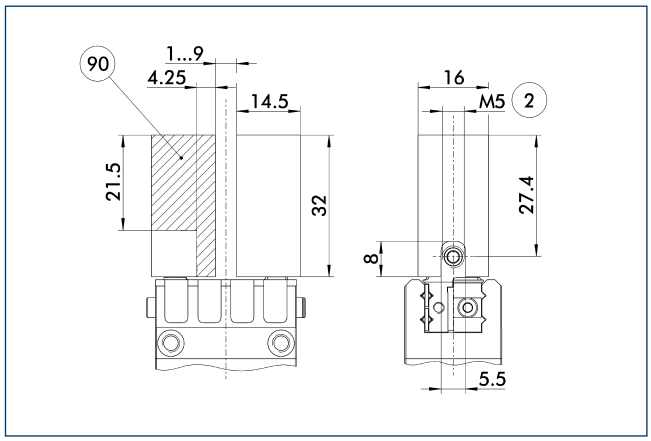

(2) Finger connection (90) Machining volume

Finger blanks for customized subsequent machining with integrated jaw quick-change system for precise and fast finger changes.

Description	ID	
Finger blanks with jaw quick-change system		
ABR-BSWS-MPG-plus 32	0302895	

Finger blanks with BSWS

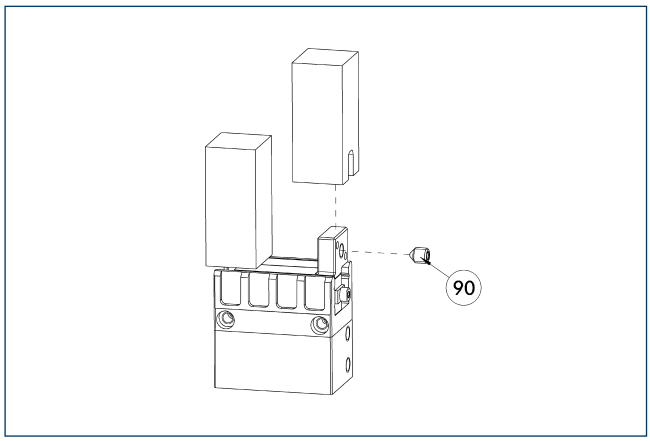

(90) Included in the jaw quick-change system's scope of delivery

The top jaw blanks with jaw quick-change system allow for fast and manual top jaw change on the gripper and already have the mechanical interface to the gripper. All the customer needs to do is integrate the workpiece-specific geometry into the blank.

Description	ID	
Finger blanks with jaw quick-change system		
ABR-BSWS-MPG-plus 32	0302895	

ABR-MPG-plus 32 finger blanks

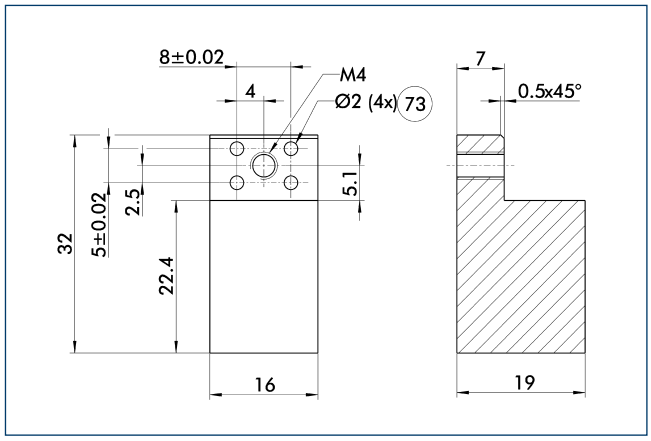

(73) Fit for centering pins

Finger blanks for customized subsequent machining.

Description	ID	Material	Scope of delivery
Finger blanks			
ABR-MPG-plus 32	0340212	Aluminum	2

OAS-MPG-plus 32 object distance sensor

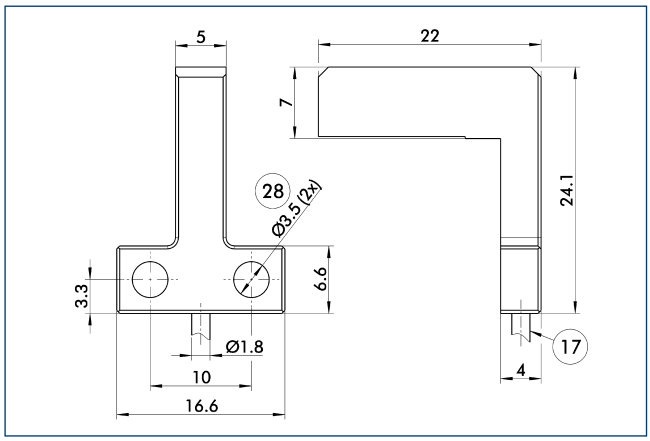

17 Cable outlet

28 Through-bore

Description	ID	
Object distance sensor		
OAS-MPG-plus 32	0308892	

Object distance sensor

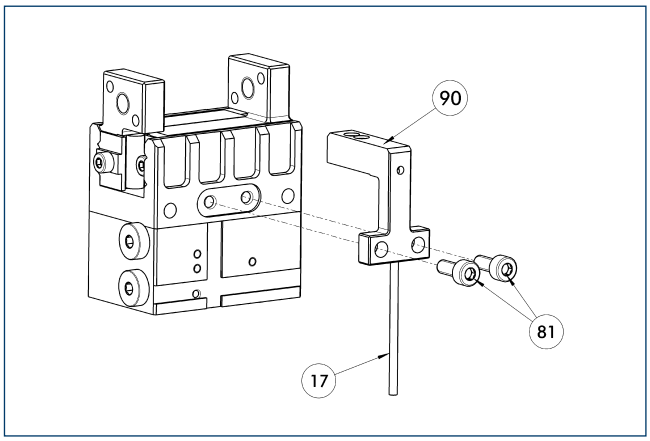

17 Cable outlet

90 OAS

81 Not included in the scope of delivery

Optical distance and presence sensor for direct mounting on the gripper. One OAS sensor per gripper can be assembled.

Description	ID	
Object distance sensor		
OAS-MPG-plus 32	0308892	
Electronic processor		
OAS-V09-D	0308865	
OAS-V10-A	0308867	
OAS-V10-D	0308866	

ⓘ The evaluation of the OAS can be done with either an analog or digital evaluation unit and with or without a display. The states which should be detected can be simply taught.

Attachment valves

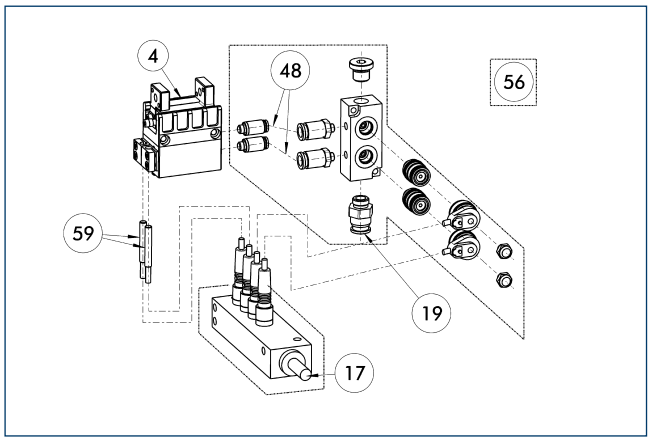

(4) Gripper
(48) Hose
(17) Cable outlet
(56) Included in delivery
(19) Air connection
(59) Monitoring gripping

For each unit one attachment valve ABV is required, optional with distributor for sensors and valves. Attachment valves increase the efficiency, reduce the installation work and air consumption and simplify air supply. For details please refer to the "Accessories" catalog section.

Description	ID	Often combined
Attachment valves		
ABV-MV15-S2-M5	0303375	
ABV-MV15-S2-M5-V2-M8	0303376	
ABV-MV15-S2-M5-V4-M8	0303377	●
ABV-MV15-S2-M5-V8-M8	0303378	

Modular assembly automation

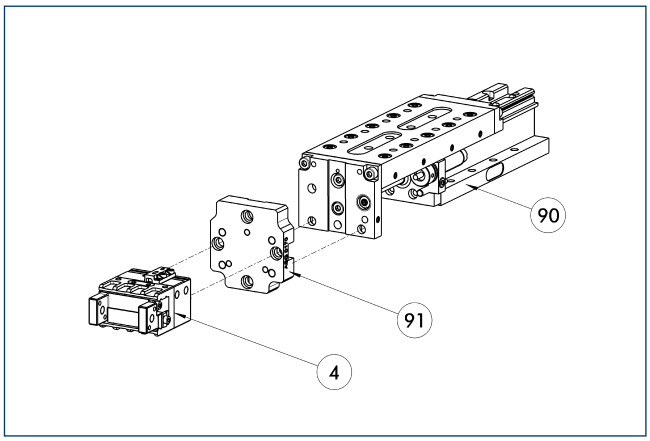

(4) Gripper
(91) ASG adapter plate
(90) CLM / KLM / LM / ELM / ELS / HLM linear module

Gripper and linear modules can be combined with standard adapters out of the modular assembly system. For more information see our catalog "Modular Assembly Automation".

Mounting kit for IN 40 proximity switches

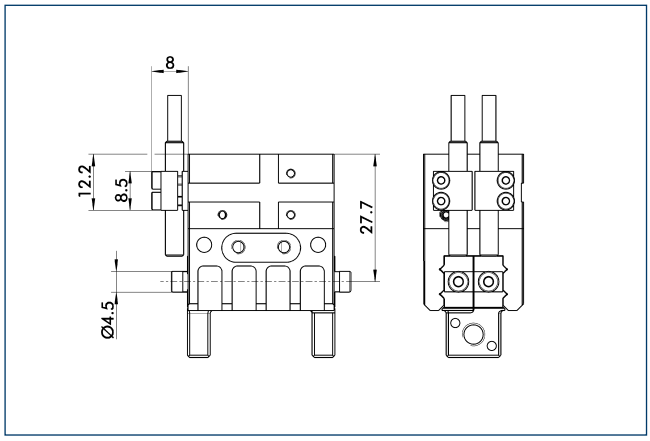

The mounting kit comprises mount, switching lug / cam and mounting screws. Proximity switches must be ordered separately.

Description	ID	
Mounting kit for proximity switch		
AS-IN40-MPG-plus 32	0305515	

ⓘ This mounting kit needs to be ordered optionally as an accessory.

IN 40 inductive proximity switches

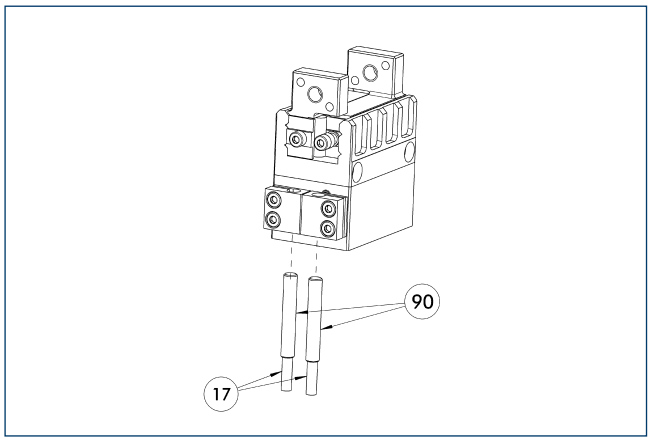

17 Cable outlet

90 IN ... sensor

Limit position monitor can be mounted with mounting kit.

Description	ID	Often combined
Mounting kit for proximity switch		
AS-IN40-MPG-plus 32	0305515	
Inductive proximity switches		
IN 40-S-M12	0301574	
IN 40-S-M8	0301474	●
INK 40-S	0301555	
Cable extensions		
KV BG12-SG12 3P-0030-PNP	0301999	
KV BG12-SG12 3P-0060-PNP	0301998	
KV BW08-SG08 3P-0030-PNP	0301495	
KV BW08-SG08 3P-0100-PNP	0301496	
KV BW08-SG08 3P-0200-PNP	0301497	●
KV BW12-SG12 3P-0030-PNP	0301595	
KV BW12-SG12 3P-0100-PNP	0301596	
KV BW12-SG12 3P-0200-PNP	0301597	
Clip for plug / socket		
CLI-M12	0301464	
CLI-M8	0301463	
Connection cables		
KA BG08-L 3P-0300-PNP	0301622	●
KA BG08-L 3P-0500-PNP	0301623	
KA BG12-L 3P-0500-PNP	30016369	
KA BW08-L 3P-0300-PNP	0301594	
KA BW08-L 3P-0500-PNP	0301502	
KA BW12-L 3P-0300-PNP	0301503	
KA BW12-L 3P-0500-PNP	0301507	
Sensor distributor		
V2-M8	0301775	●
V2-M12	0301776	●
V4-M12	0301747	
V4-M8	0301746	
V8-M12	0301752	
V8-M8	0301751	

ⓘ Two sensors (closer/S) are required for each unit, plus extension cables as an option. This mounting kit needs to be ordered optionally as an accessory. Please note the minimum permitted bending radii for the sensor cables, which are generally 35 mm.

Mounting kit for IN 5 proximity switches

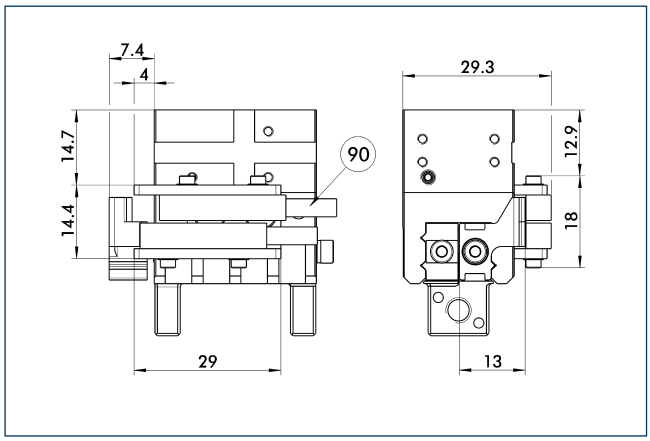

(90) IN ... sensor

The mounting kit comprises mount, switching lug / cam and mounting screws. Proximity switches must be ordered separately.

Description	ID	
Mounting kit for proximity switch		
AS-IN5-MPG-plus 32	0340151	

ⓘ This mounting kit needs to be ordered optionally as an accessory.

IN 5 inductive proximity switches

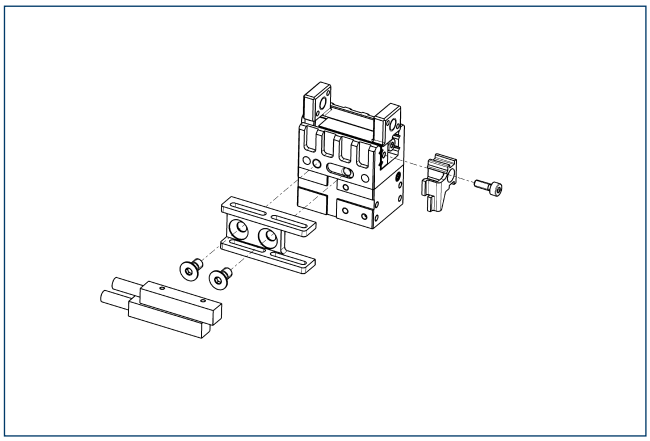

Limit position monitor can be mounted with mounting kit.

Description	ID	Often combined
Mounting kit for proximity switch		
AS-IN5-MPG-plus 32	0340151	
Inductive proximity switches		
IN 5-S-M12	0301569	
IN 5-S-M8	0301469	●
Cable extensions		
KV BG12-SG12 3P-0030-PNP	0301999	
KV BG12-SG12 3P-0060-PNP	0301998	
KV BW08-SG08 3P-0030-PNP	0301495	
KV BW08-SG08 3P-0100-PNP	0301496	
KV BW08-SG08 3P-0200-PNP	0301497	●
KV BW12-SG12 3P-0030-PNP	0301595	
KV BW12-SG12 3P-0100-PNP	0301596	
KV BW12-SG12 3P-0200-PNP	0301597	
Clip for plug / socket		
CLI-M12	0301464	
CLI-M8	0301463	
Connection cables		
KA BG08-L 3P-0300-PNP	0301622	●
KA BG08-L 3P-0500-PNP	0301623	
KA BG12-L 3P-0500-PNP	30016369	
KA BW08-L 3P-0300-PNP	0301594	
KA BW08-L 3P-0500-PNP	0301502	
KA BW12-L 3P-0300-PNP	0301503	
KA BW12-L 3P-0500-PNP	0301507	
Sensor distributor		
V2-M8	0301775	●
V2-M12	0301776	●
V4-M12	0301747	
V4-M8	0301746	
V8-M12	0301752	
V8-M8	0301751	

ⓘ Two sensors (closer/S) are required for each unit, plus extension cables as an option. This mounting kit needs to be ordered optionally as an accessory. Please note the minimum permitted bending radii for the sensor cables, which are generally 35 mm.

Flexible position sensor

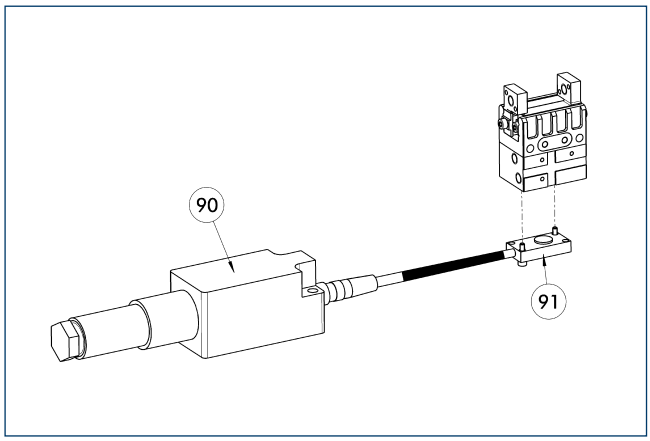

(90) FPS-F5 / -F5 T electronic processor

(91) FPS-S sensor

The FPS monitoring is only possible for this size in combination with the appropriate FPS variant of the gripper.

Description	ID	Often combined
Sensor		
FPS-S 13	0301705	
Electronic processor		
FPS-F5	0301805	●
FPS-F5 T	0301807	

ⓘ When using a FPS system, a FPS sensor (FPS-S) and a control unit (FPS-F5 / F5 T) are required for each gripper as well as a mounting kit (AS), if listed. Cable extensions (KV) are available as options in the "Accessories" catalog section.

MMS-P programmable magnetic switches

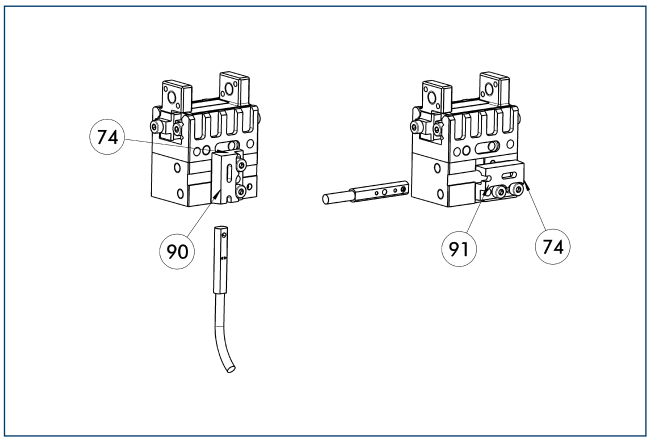

(74) Stop for MMS-P

(90) Vertical mounting of the sensor bracket

(91) Horizontal mounting of the sensor bracket

Position monitoring with two programmable positions per sensor. The end position monitoring is mounted in the C-slot.

Description	ID	Often combined
MMS-P programmable magnetic switches		
MMSK-P 22-S-PNP	0301371	
MMS-P 22-S-M8-PNP	0301370	●
Clip for plug / socket		
CLI-M8	0301463	
Connection cables		
KA BG08-L 4P-0500	0307767	●
KA BG08-L 4P-1000	0307768	
KA BW08-L 4P-0500	0307765	
KA BW08-L 4P-1000	0307766	
Sensor distributor		
V2-M8-4P-2XM8-3P	0301380	

ⓘ Is delivered with the sensor bracket (90) mounted in the vertical orientation. To use the sensor in a horizontal orientation, the sensor bracket can be horizontally assembled (91). The mounting bracket has an internal stop for the MMS-P sensor (74).

MMS-A analog position sensor

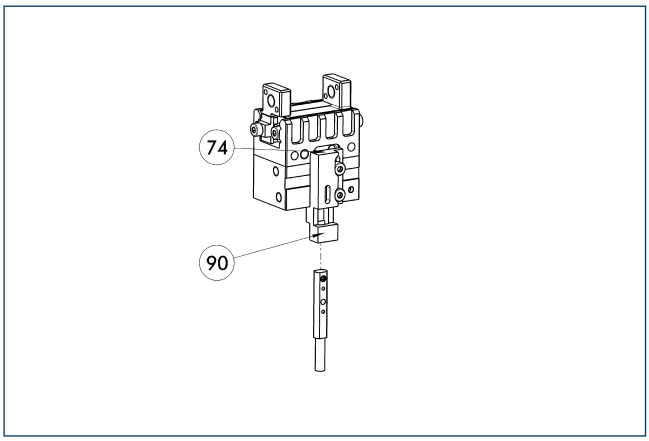

74 Stop for MMS-P

90 Vertical mounting of the sensor bracket

Contactlessly measuring, analog multi-position monitoring for any number of positions.

Description	ID	
Analog position sensor		
MMS 22-A-05V-M08	0315800	
MMS 22-A-10V-M08	0315820	

ⓘ One sensor is needed for each gripper. No additional mounting kit is needed – the standard gripper is equipped for use of the MMS-A.

MPG-plus 40

SCHUNK Grippers pneumatic | 2-Finger Parallel Grippers | Miniature Parallel Gripper

Gripping force, O.D. gripping

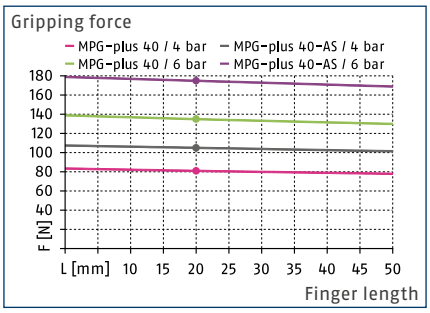

Gripping force, I.D. gripping

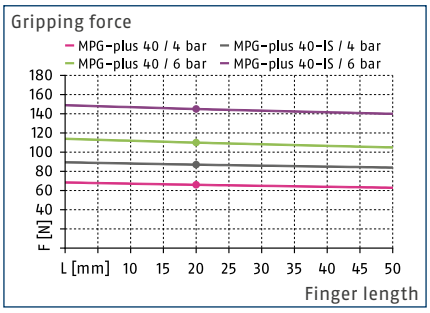

Finger load

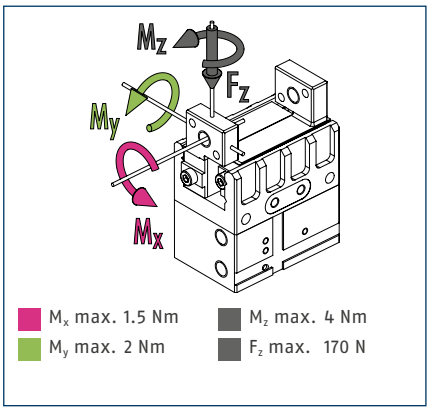

ⓘ The indicated moments and forces are static values, apply per base jaw and may occur simultaneously. M_y may arise in addition to the moment generated by the gripping force itself. If the max. permitted finger weight is exceeded, it is impreative to throttle the air supply so that the jaw movement occurs without any hitting or bouncing. Service life may be reduced.

Technical data

Description		MPG-plus 40	MPG-plus 40-AS	MPG-plus 40-IS
ID		0305521	0305522	0305523
Stroke per jaw	[mm]	6	6	6
Closing- / opening force	[N]	135/110	170/-	-/135
min. spring force	[N]		35	25
Weight	[kg]	0.18	0.24	0.24
Recommended workpiece weight	[kg]	0.7	0.7	0.7
Fluid consumption per double stroke	[cm³]	4.1	10.7	10
min. / max. operating pressure	[bar]	2/8	4/6.5	4/6.5
Nominal operating pressure	[bar]	6	6	6
Closing- / opening time	[s]	0.04/0.04	0.045/0.075	0.075/0.045
Closing- / opening time only with spring	[s]		0.20	0.20
max. permitted finger length	[mm]	50	50	50
max. permitted weight per finger	[kg]	0.08	0.08	0.08
IP class		30	30	30
min. / max. ambient temperature	[°C]	5/90	5/90	5/90
Repeat accuracy	[mm]	0.02	0.02	0.02
Options and their characteristics				
High-temperature version		39305521	39305522	39305523
min. / max. ambient temperature	[°C]	5/100	5/100	5/100
Precision version		0305526	0305528	0305529

Main view

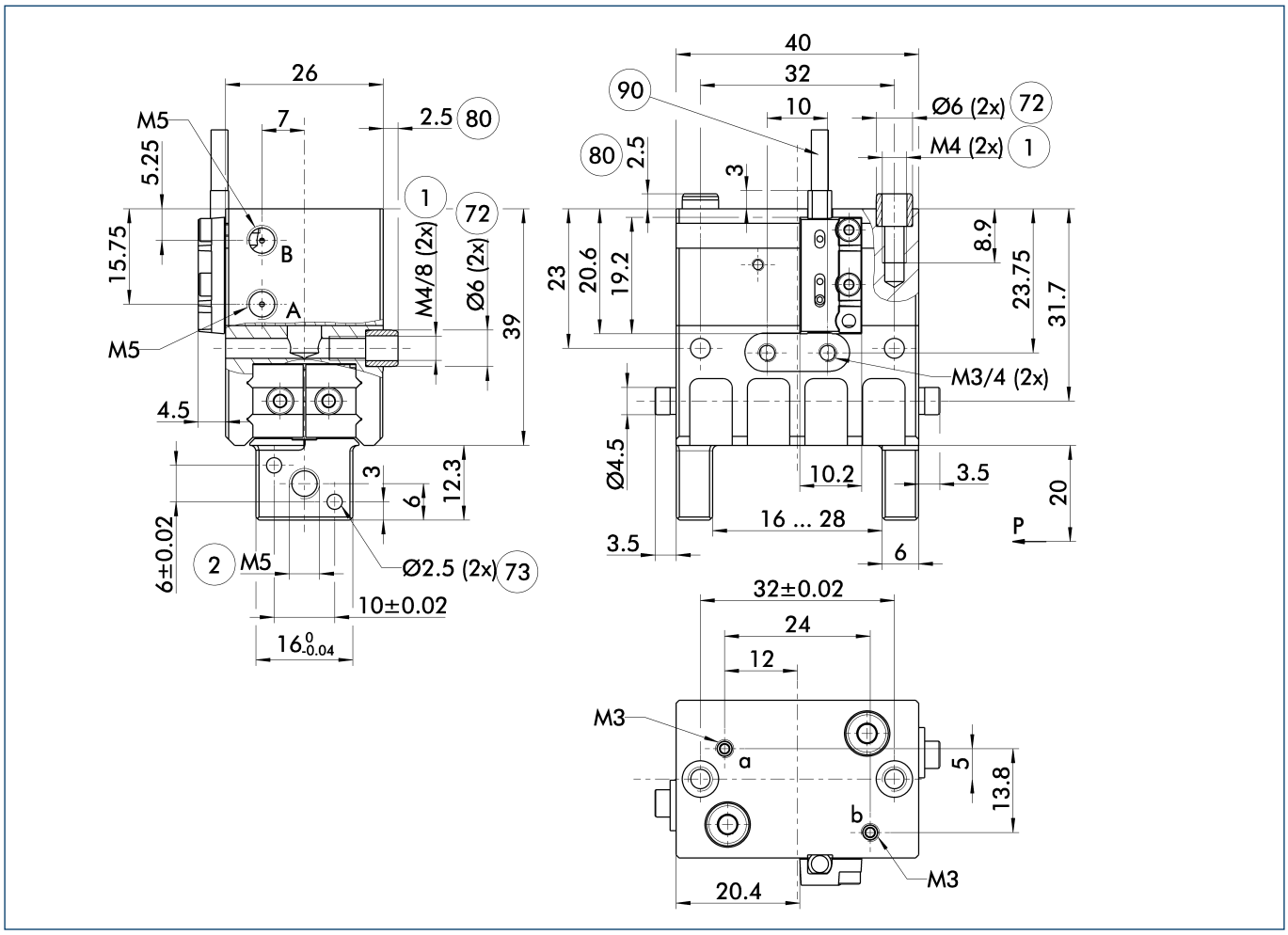

The drawing shows the basic version of the gripper with open jaws, without dimensional consideration of the options described below.

ⓘ The SDV-P pressure maintenance valve can also be used for I.D. or O.D. gripping alternatively or in addition to the spring-loaded, mechanical gripping force maintenance device (see catalog section on "Accessories").

A, a Main / direct connection, gripper opening

B, b Main / direct connection, gripper closing

(1) Gripper connection

(2) Finger connection

(72) Fit for centering sleeves

(73) Fit for centering pins

(80) Depth of the centering sleeve hole in the mating part

(90) MMS-P

Maximum permitted finger projection

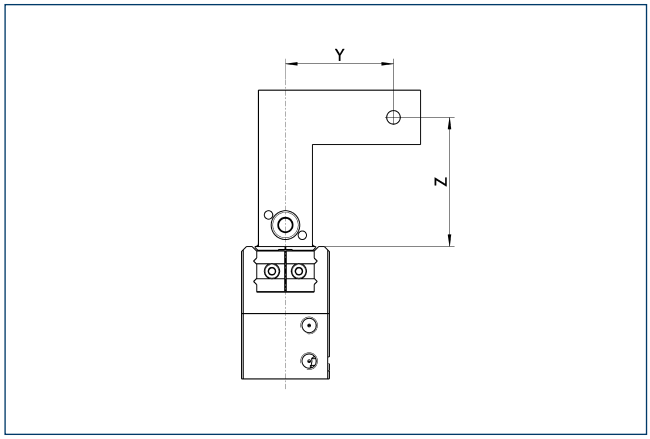

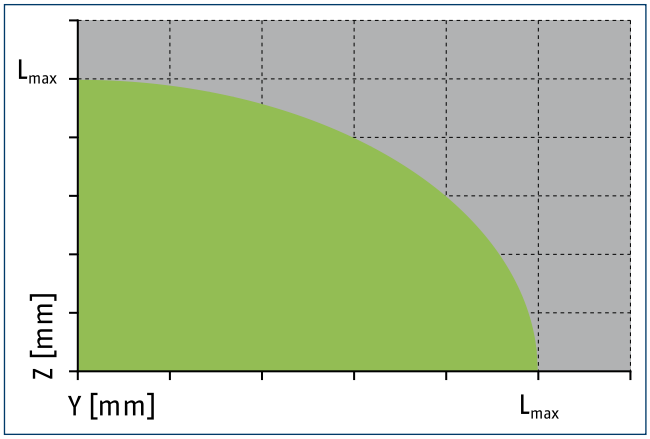

Permitted range

Inadmissible range

L_{max} is equivalent to the maximum permitted finger length, see the chart of technical specifications.

Monitoring for stacked arrangement

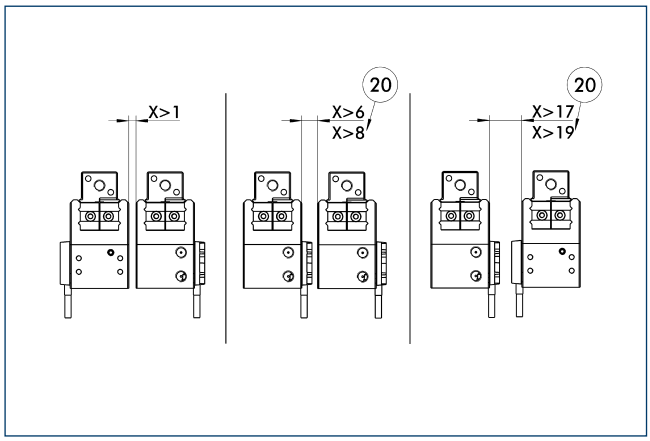

20 For AS / IS version

Caution: Monitoring is carried out by magnetic switches, and in case of side-by-side assembly of several units, a minimum distance of X mm between the units must be maintained.

Hose-free direct connection M3

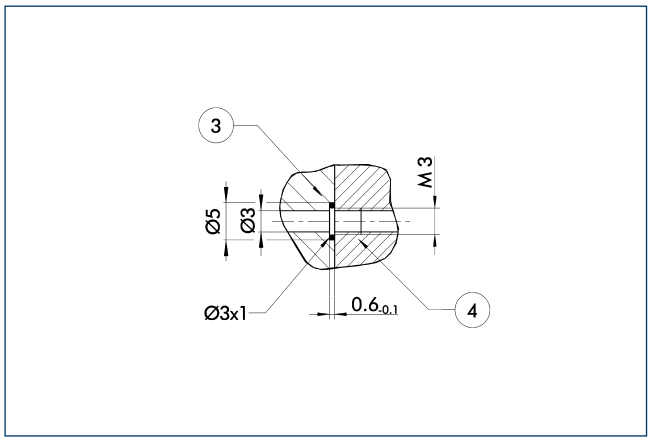

3 Adapter 4 Gripper

The direct connection is used for supplying compressed air without hoses. Instead, the pressure medium is fed through bore-holes in the mounting plate.

Gripping force maintenance device AS

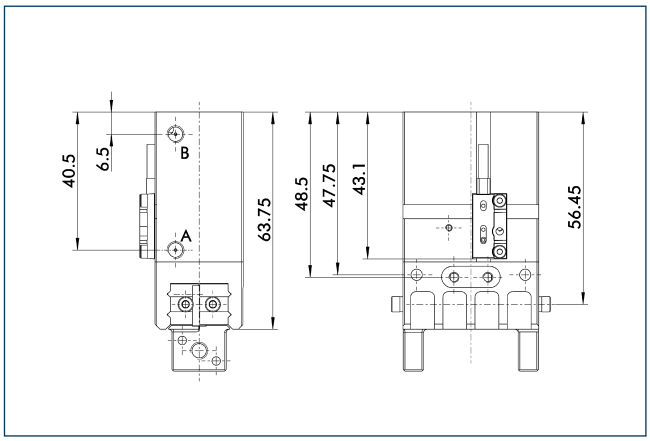

The mechanical maintenance of gripping force also assures a minimum gripping force in the case of a loss of pressure. With the AS / S variant, this acts as a closing force, and as an opening force for the IS variant. The maintenance of gripping force element can also be used as a means for increasing gripping force or for single actuated gripping.

Gripping force maintenance device IS

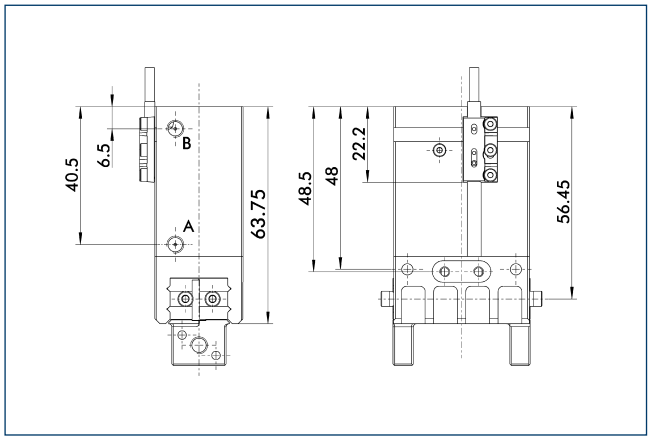

The mechanical maintenance of gripping force also assures a minimum gripping force in the case of a loss of pressure. With the AS / S variant, this acts as a closing force, and as an opening force for the IS variant. The maintenance of gripping force element can also be used as a means for increasing gripping force or for single actuated gripping.

Jaw design

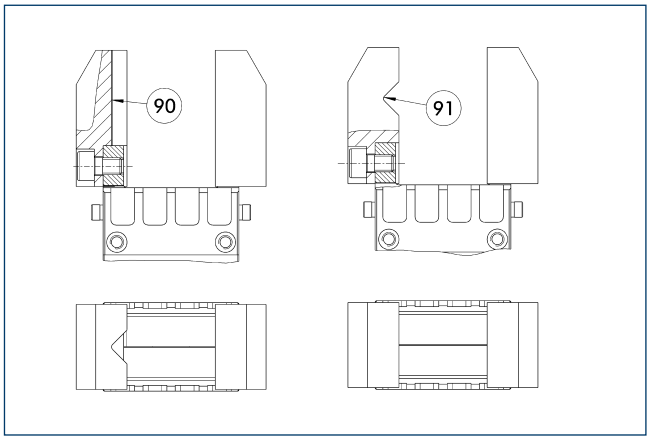

90 Vertical prism 91 Horizontal prism

A three-point support of the gripped workpiece is beneficial for gripping the workpiece with repeat accuracy and process reliability. More than three support points lead to a redundancy of the system. The drawing shows two alternative recommendations for the jaw design for coaxial and radial gripping of a cylindrical part.

Precision version

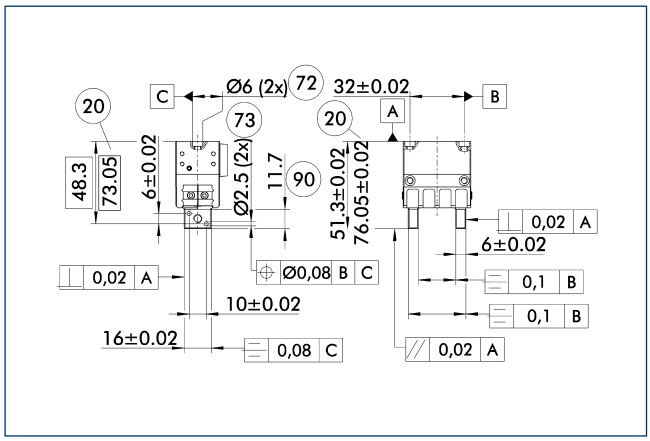

20 For AS / IS version
72 Fit for centering sleeves
73 Fit for centering pins
90 Length of the usable finger surface

The indicated tolerances just refer to the types of precision versions shown in the chart of technical specifications. All other types of precision versions are available on request.

Adapter plate

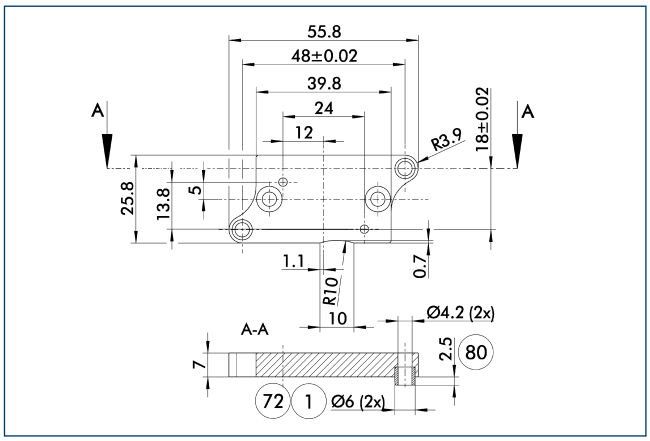

1 Gripper connection
72 Fit for centering sleeves
80 Depth of the centering sleeve hole in the mating part

The adapter plate includes O-rings* for a hose-free direct connection, additional centering sleeves and screws for mounting the gripper.
*Only used with pneumatic actuators.

Description	ID	
Adapter plate		
APL-MPG-plus 40	0305527	

ⓘ The adapter plate is a separately ordered, optional accessory.

SDV-P pressure maintenance valve

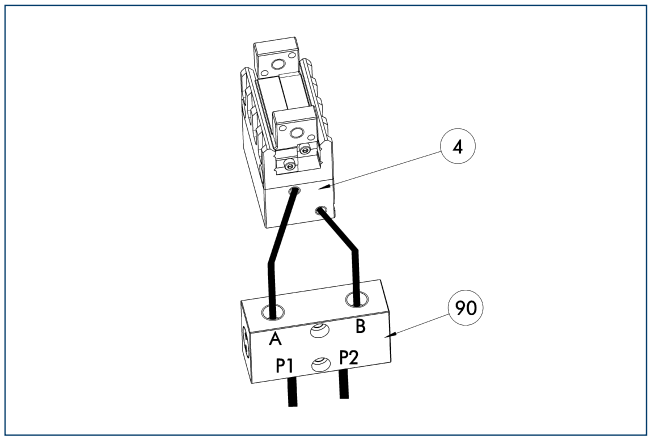

4 Gripper
90 SDV-P pressure maintenance valve

The SDV-P pressure maintenance valves ensure that the pressure in the piston chamber of pneumatic gripping, rotary, linear, and quick-change modules is maintained temporarily during an emergency stop.

Description	ID	
Pressure maintenance valve		
SDV-P 04	0403130	

Adapter plate

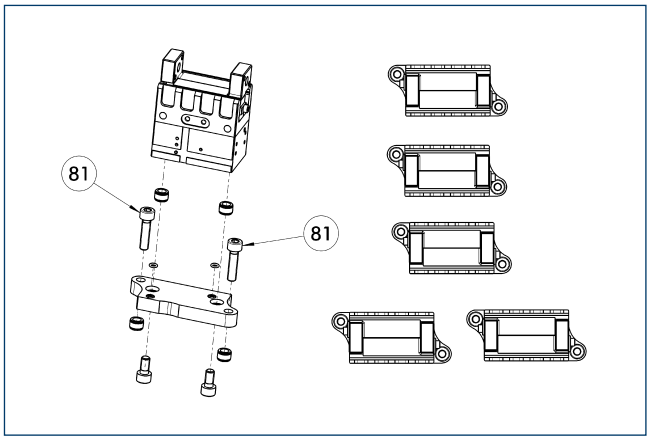

81 Not included in the scope of delivery

The adapter plate includes O-rings* for a hose-free direct connection, additional centering sleeves and screws for mounting the gripper.
*Only used with pneumatic actuators.

Description	ID	
Adapter plate		
APL-MPG-plus 40	0305527	

ⓘ The adapter plate is a separately ordered, optional accessory.

Finger blanks with BSWS ABR-BSWS-MPG-plus 40

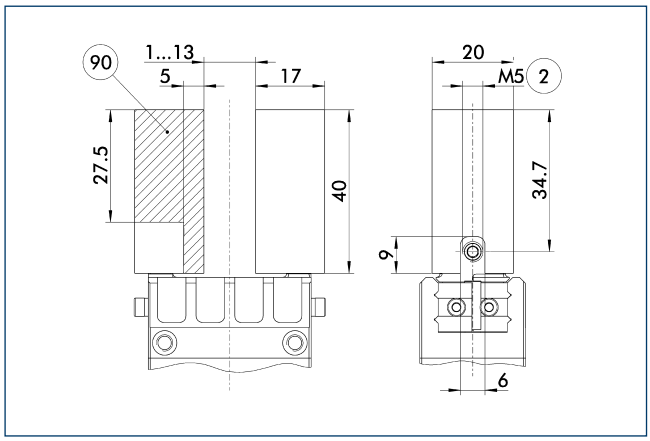

2 Finger connection
90 Machining volume

Finger blanks for customized subsequent machining with integrated jaw quick-change system for precise and fast finger changes.

Description	ID	
Finger blanks with jaw quick-change system		
ABR-BSWS-MPG-plus 40	0302896	

Finger blanks with BSWS

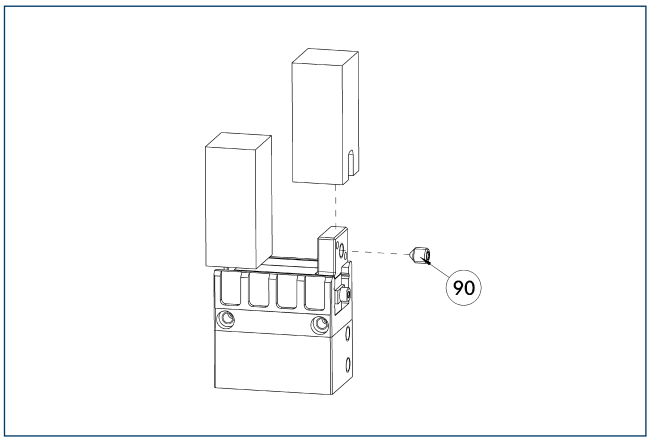

90 Included in the jaw quick-change system's scope of delivery

The top jaw blanks with jaw quick-change system allow for fast and manual top jaw change on the gripper and already have the mechanical interface to the gripper. All the customer needs to do is integrate the workpiece-specific geometry into the blank.

Description	ID	
Finger blanks with jaw quick-change system		
ABR-BSWS-MPG-plus 40	0302896	

ABR-MPG-plus 40 finger blanks

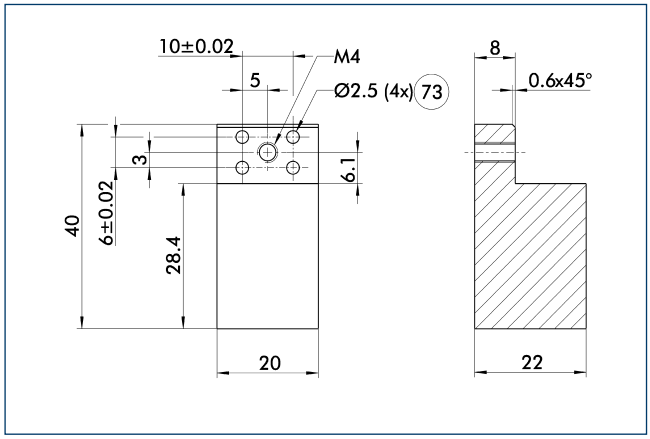

73 Fit for centering pins

Finger blanks for customized subsequent machining.

Description	ID	Material	Scope of delivery
Finger blanks			
ABR-MPG-plus 40	0340213	Aluminum	2

OAS-MPG-plus 40 object distance sensor

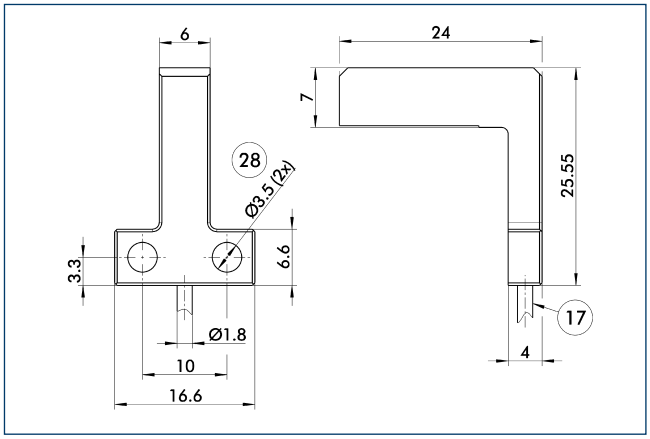

17 Cable outlet
28 Through-bore

Description	ID	
Object distance sensor		
OAS-MPG-plus 40	0308893	

Object distance sensor

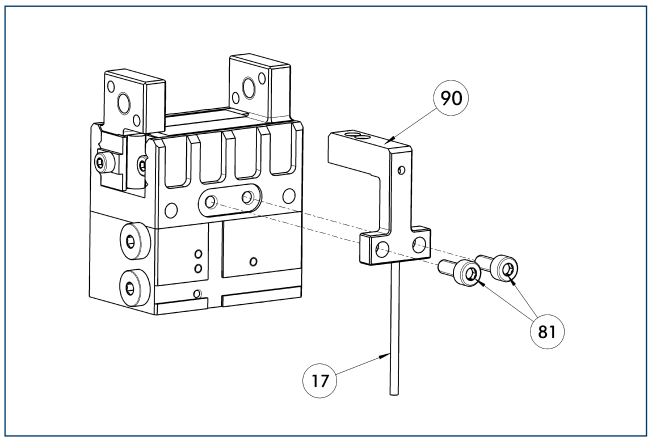

(17) Cable outlet
(90) OAS
(81) Not included in the scope of delivery

Optical distance and presence sensor for direct mounting on the gripper. One OAS sensor per gripper can be assembled.

Description	ID	
Object distance sensor		
OAS-MPG-plus 40	0308893	
Electronic processor		
OAS-V09-D	0308865	
OAS-V10-A	0308867	
OAS-V10-D	0308866	

ⓘ The evaluation of the OAS can be done with either an analog or digital evaluation unit and with or without a display. The states which should be detected can be simply taught.

Attachment valves

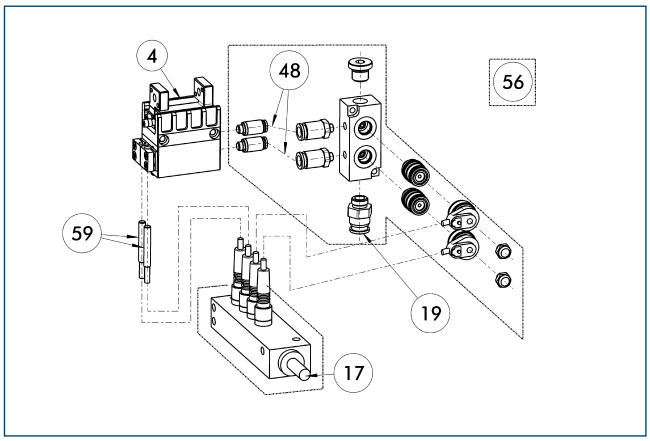

(4) Gripper
(17) Cable outlet
(19) Air connection
(48) Hose
(56) Included in delivery
(59) Monitoring gripping

For each unit one attachment valve ABV is required, optional with distributor for sensors and valves. Attachment valves increase the efficiency, reduce the installation work and air consumption and simplify air supply. For details please refer to the "Accessories" catalog section.

Description	ID	Often combined
Attachment valves		
ABV-MV15-S2-M5	0303375	
ABV-MV15-S2-M5-V2-M8	0303376	
ABV-MV15-S2-M5-V4-M8	0303377	●
ABV-MV15-S2-M5-V8-M8	0303378	

Modular assembly automation

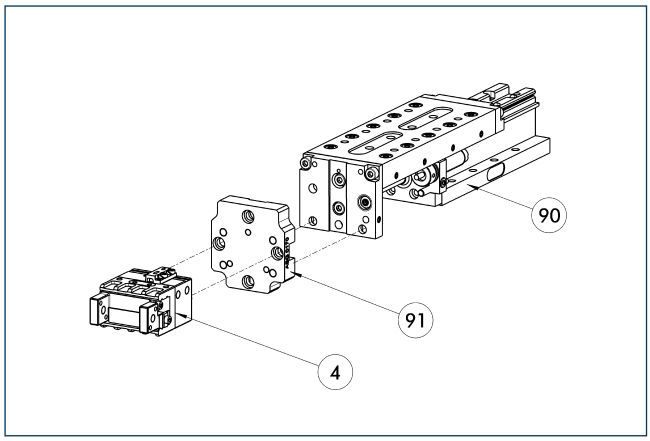

(4) Gripper
(90) CLM / KLM / LM / ELM / ELS / HLM linear module
(91) ASG adapter plate

Gripper and linear modules can be combined with standard adapters out of the modular assembly system. For more information see our catalog "Modular Assembly Automation".

Mounting kit for IN 40 proximity switches

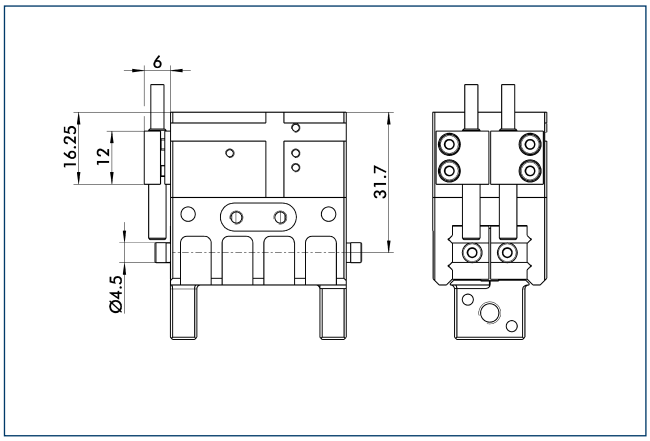

The mounting kit comprises mount, switching lug / cam and mounting screws. Proximity switches must be ordered separately.

Description	ID	
Mounting kit for proximity switch		
AS-IN40-MPG-plus 40	0305525	

ⓘ This mounting kit needs to be ordered optionally as an accessory.

IN 40 inductive proximity switches

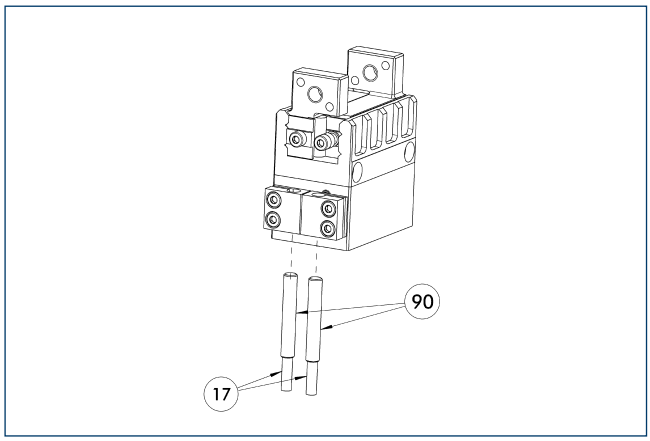

17 Cable outlet 90 IN ... sensor

Limit position monitor can be mounted with mounting kit.

Description	ID	Often combined
Mounting kit for proximity switch		
AS-IN40-MPG-plus 40	0305525	
Inductive proximity switches		
IN 40-S-M12	0301574	
IN 40-S-M8	0301474	●
INK 40-S	0301555	
Cable extensions		
KV BG12-SG12 3P-0030-PNP	0301999	
KV BG12-SG12 3P-0060-PNP	0301998	
KV BW08-SG08 3P-0030-PNP	0301495	
KV BW08-SG08 3P-0100-PNP	0301496	
KV BW08-SG08 3P-0200-PNP	0301497	●
KV BW12-SG12 3P-0030-PNP	0301595	
KV BW12-SG12 3P-0100-PNP	0301596	
KV BW12-SG12 3P-0200-PNP	0301597	
Clip for plug / socket		
CLI-M12	0301464	
CLI-M8	0301463	
Connection cables		
KA BG08-L 3P-0300-PNP	0301622	●
KA BG08-L 3P-0500-PNP	0301623	
KA BG12-L 3P-0500-PNP	30016369	
KA BW08-L 3P-0300-PNP	0301594	
KA BW08-L 3P-0500-PNP	0301502	
KA BW12-L 3P-0300-PNP	0301503	
KA BW12-L 3P-0500-PNP	0301507	
Sensor distributor		
V2-M8	0301775	●
V2-M12	0301776	●
V4-M12	0301747	
V4-M8	0301746	
V8-M12	0301752	
V8-M8	0301751	

ⓘ Two sensors (closer/S) are required for each unit, plus extension cables as an option. This mounting kit needs to be ordered optionally as an accessory. Please note the minimum permitted bending radii for the sensor cables, which are generally 35 mm.

Mounting kit for IN 5 proximity switches

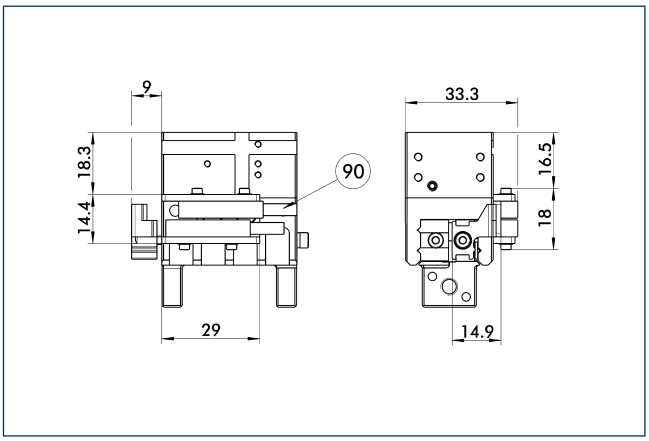

90 IN ... sensor

The mounting kit comprises mount, switching lug / cam and mounting screws. Proximity switches must be ordered separately.

Description	ID	
Mounting kit for proximity switch		
AS-IN5-MPG-plus 40	0340152	

ⓘ This mounting kit needs to be ordered optionally as an accessory.

IN 5 inductive proximity switches

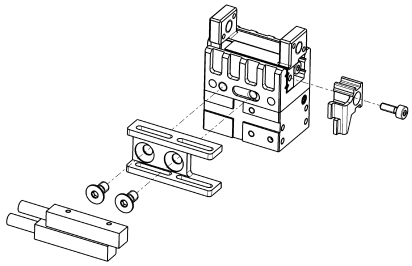

Limit position monitor can be mounted with mounting kit.

Description	ID	Often combined
Mounting kit for proximity switch		
AS-IN5-MPG-plus 40	0340152	
Inductive proximity switches		
IN 5-S-M12	0301569	
IN 5-S-M8	0301469	●
Cable extensions		
KV BG12-SG12 3P-0030-PNP	0301999	
KV BG12-SG12 3P-0060-PNP	0301998	
KV BW08-SG08 3P-0030-PNP	0301495	
KV BW08-SG08 3P-0100-PNP	0301496	
KV BW08-SG08 3P-0200-PNP	0301497	●
KV BW12-SG12 3P-0030-PNP	0301595	
KV BW12-SG12 3P-0100-PNP	0301596	
KV BW12-SG12 3P-0200-PNP	0301597	
Clip for plug / socket		
CLI-M12	0301464	
CLI-M8	0301463	
Connection cables		
KA BG08-L 3P-0300-PNP	0301622	●
KA BG08-L 3P-0500-PNP	0301623	
KA BG12-L 3P-0500-PNP	30016369	
KA BW08-L 3P-0300-PNP	0301594	
KA BW08-L 3P-0500-PNP	0301502	
KA BW12-L 3P-0300-PNP	0301503	
KA BW12-L 3P-0500-PNP	0301507	
Sensor distributor		
V2-M8	0301775	●
V2-M12	0301776	●
V4-M12	0301747	
V4-M8	0301746	
V8-M12	0301752	
V8-M8	0301751	

ⓘ Two sensors (closer/S) are required for each unit, plus extension cables as an option. This mounting kit needs to be ordered optionally as an accessory. Please note the minimum permitted bending radii for the sensor cables, which are generally 35 mm.

Mounting kit for FPS

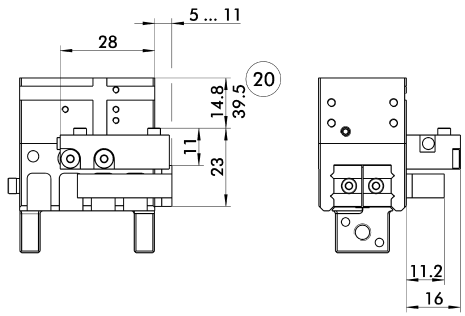

(20) For AS / IS version

The following FPS position sensor can differentiate between five programmable areas and/or switching points for the stroke of a gripper, and can be used in combination with a PC as a measuring system.

Description	ID	
Mounting kit for FPS		
AS-FPS-MPG-plus 40	0301762	

ⓘ This mounting kit needs to be ordered optionally as an accessory.

Flexible position sensor

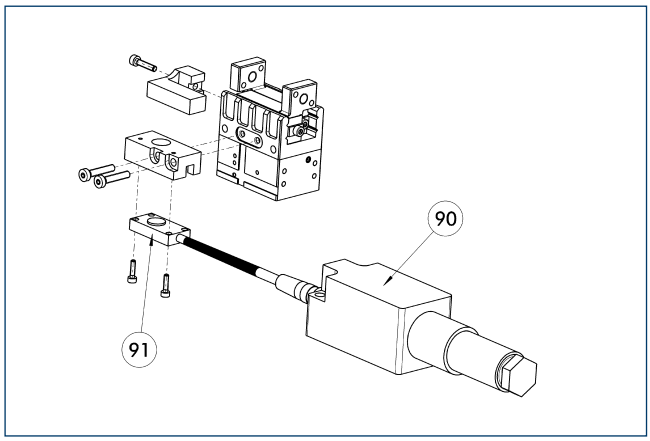

(90) FPS-F5 / -F5 T electronic processor
(91) FPS-S sensor

Flexible position monitoring of up to five positions.

Description	ID	Often combined
Mounting kit for FPS		
AS-FPS-MPG-plus 40	0301762	
Sensor		
FPS-S 13	0301705	
Electronic processor		
FPS-F5	0301805	●
FPS-F5 T	0301807	

ⓘ When using a FPS system, a FPS sensor (FPS-S) and a control unit (FPS-F5 / F5 T) are required for each gripper as well as a mounting kit (AS), if listed. Cable extensions (KV) are available as options in the "Accessories" catalog section.

MMS-P programmable magnetic switches

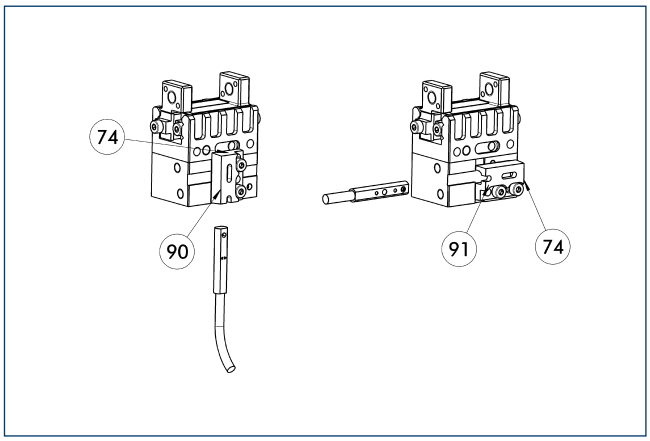

(74) Stop for MMS-P
(90) Vertical mounting of the sensor bracket
(91) Horizontal mounting of the sensor bracket

Position monitoring with two programmable positions per sensor. The end position monitoring is mounted in the C-slot.

Description	ID	Often combined
MMS-P programmable magnetic switches		
MMSK-P 22-S-PNP	0301371	
MMS-P 22-S-M8-PNP	0301370	●
Clip for plug / socket		
CLI-M8	0301463	
Connection cables		
KA BG08-L 4P-0500	0307767	●
KA BG08-L 4P-1000	0307768	
KA BW08-L 4P-0500	0307765	
KA BW08-L 4P-1000	0307766	
Sensor distributor		
V2-M8-4P-2XM8-3P	0301380	

ⓘ Is delivered with the sensor bracket (90) mounted in the vertical orientation. To use the sensor in a horizontal orientation, the sensor bracket can be horizontally assembled (91). The mounting bracket has an internal stop for the MMS-P sensor (74).

MMS-A analog position sensor

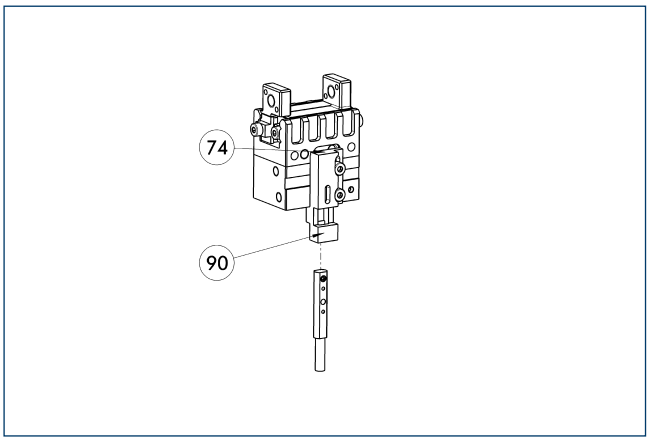

74 Stop for MMS-P

90 Vertical mounting of the sensor bracket

Contactlessly measuring, analog multi-position monitoring for any number of positions.

Description	ID	
Analog position sensor		
MMS 22-A-05V-M08	0315800	
MMS 22-A-10V-M08	0315820	

ⓘ One sensor is needed for each gripper. No additional mounting kit is needed – the standard gripper is equipped for use of the MMS-A.

MPG-plus 50

SCHUNK Grippers pneumatic | 2-Finger Parallel Grippers | Miniature Parallel Gripper

Gripping force, O.D. gripping

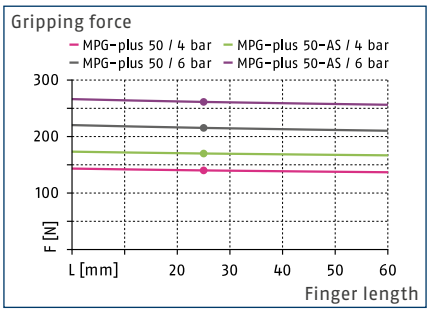

Gripping force, I.D. gripping

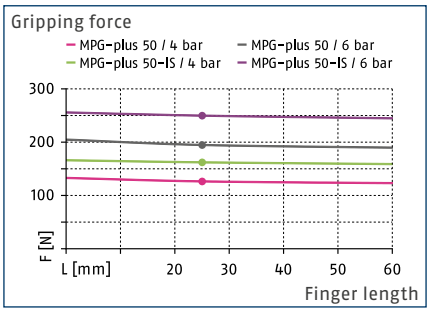

Finger load

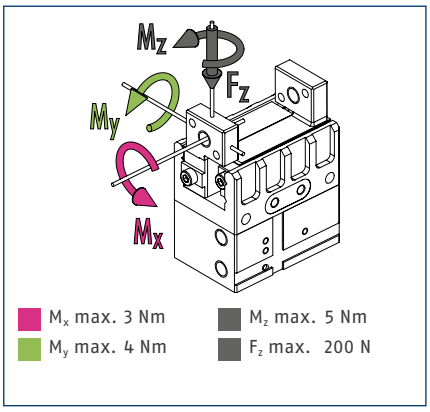

ⓘ The indicated moments and forces are static values, apply per base jaw and may occur simultaneously. M_y may arise in addition to the moment generated by the gripping force itself. If the max. permitted finger weight is exceeded, it is impreative to throttle the air supply so that the jaw movement occurs without any hitting or bouncing. Service life may be reduced.

Technical data

Description		MPG-plus 50	MPG-plus 50-AS	MPG-plus 50-IS
ID		0305531	0305532	0305533
Stroke per jaw	[mm]	8	8	8
Closing- / opening force	[N]	215/195	265/-	-/230
min. spring force	[N]		50	35
Weight	[kg]	0.31	0.37	0.38
Recommended workpiece weight	[kg]	1.05	1.05	1.05
Fluid consumption per double stroke	[cm³]	8	17	15
min. / max. operating pressure	[bar]	2/8	4/6.5	4/6.5
Nominal operating pressure	[bar]	6	6	6
Closing- / opening time	[s]	0.04/0.04	0.045/0.075	0.075/0.045
Closing- / opening time only with spring	[s]		0.30	0.30
max. permitted finger length	[mm]	64	64	64
max. permitted weight per finger	[kg]	0.14	0.14	0.14
IP class		30	30	30
min. / max. ambient temperature	[°C]	5/90	5/90	5/90
Repeat accuracy	[mm]	0.02	0.02	0.02
Options and their characteristics				
High-temperature version		39305531	39305532	39305533
min. / max. ambient temperature	[°C]	5/100	5/100	5/100

Main view

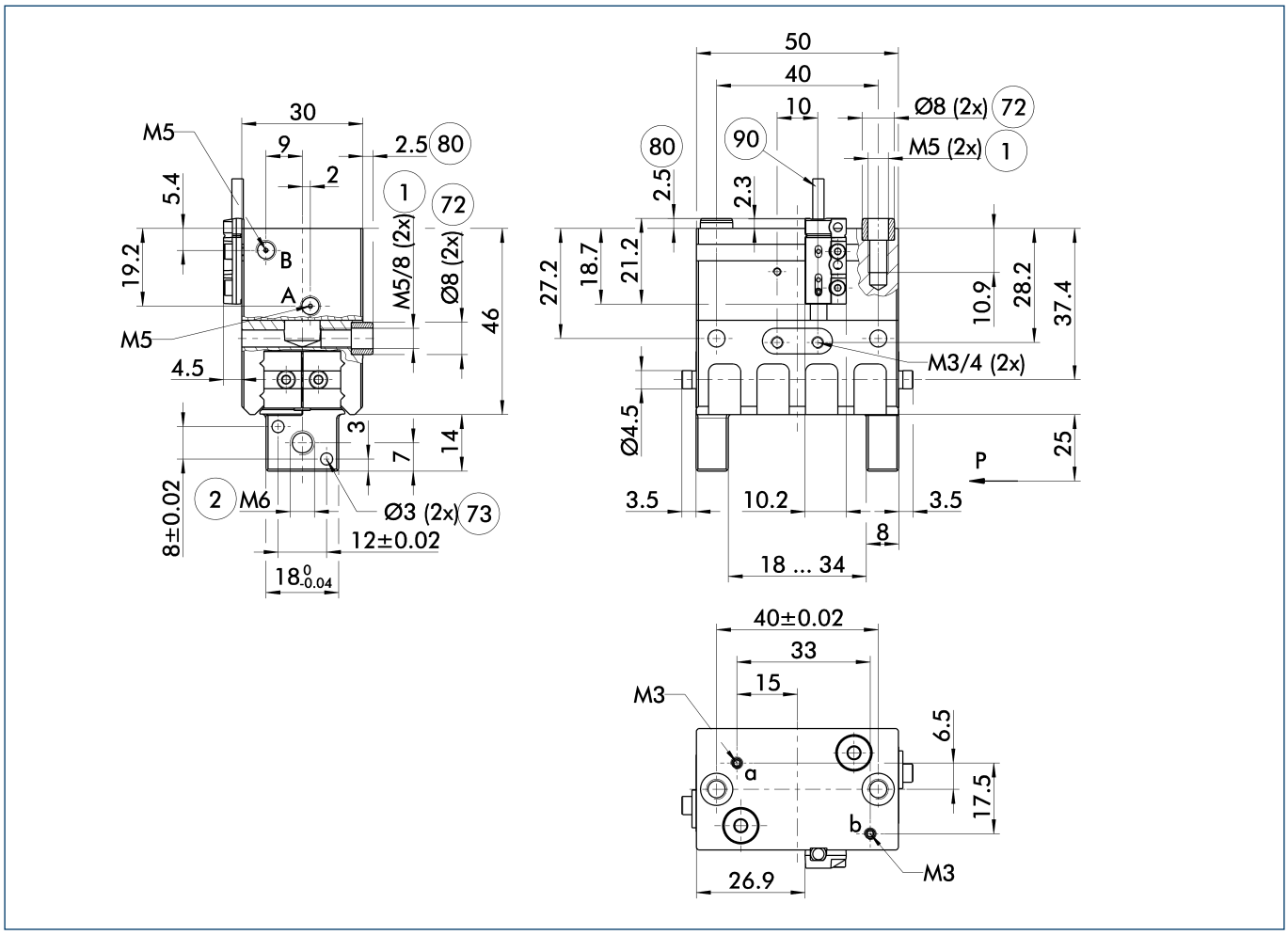

The drawing shows the basic version of the gripper with open jaws, without dimensional consideration of the options described below.

ⓘ The SDV-P pressure maintenance valve can also be used for I.D. or O.D. gripping alternatively or in addition to the spring-loaded, mechanical gripping force maintenance device (see catalog section on "Accessories").

A, a Main / direct connection, gripper opening

B, b Main / direct connection, gripper closing

(1) Gripper connection

(2) Finger connection

(72) Fit for centering sleeves

(73) Fit for centering pins

(80) Depth of the centering sleeve hole in the mating part

(90) MMS-P

Maximum permitted finger projection

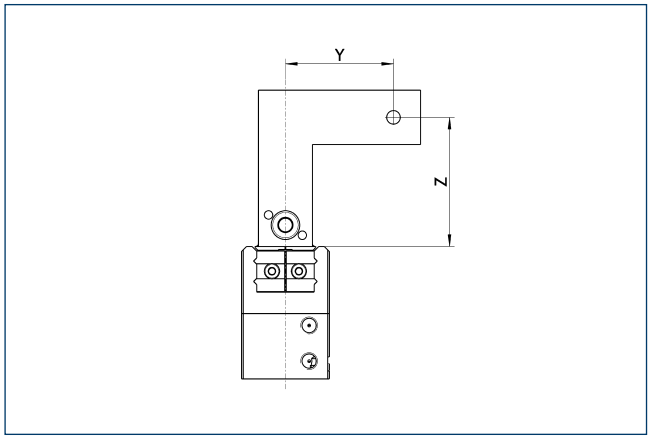

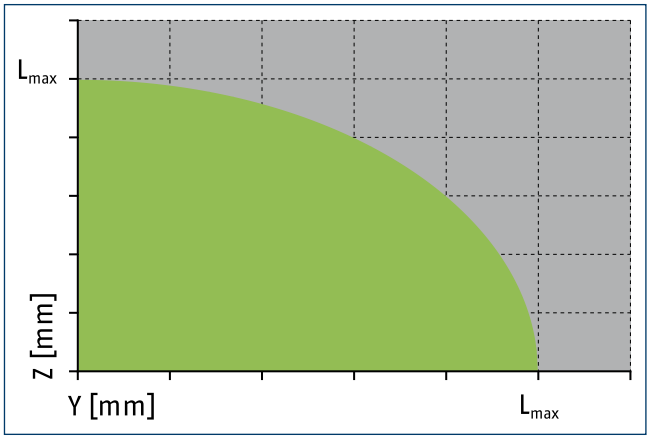

Permitted range

Inadmissible range

L_{max} is equivalent to the maximum permitted finger length, see the chart of technical specifications.

Monitoring for stacked arrangement

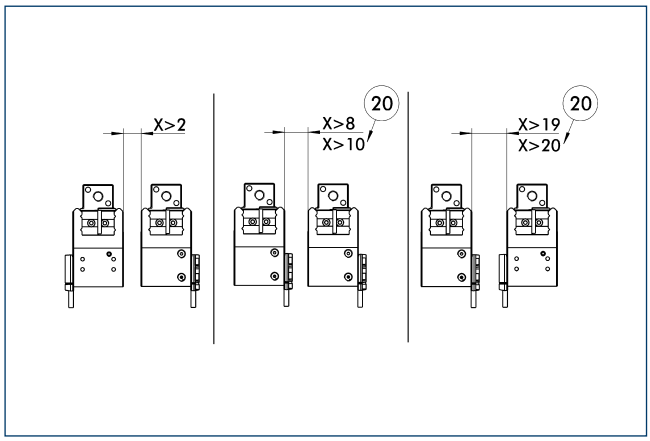

20 For AS / IS version

Caution: Monitoring is carried out by magnetic switches, and in case of side-by-side assembly of several units, a minimum distance of X mm between the units must be maintained.

Hose-free direct connection M3

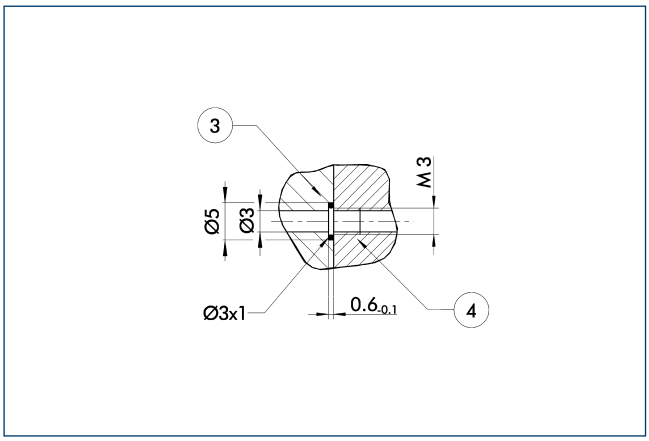

3 Adapter 4 Gripper

The direct connection is used for supplying compressed air without hoses. Instead, the pressure medium is fed through bore-holes in the mounting plate.

Gripping force maintenance device AS

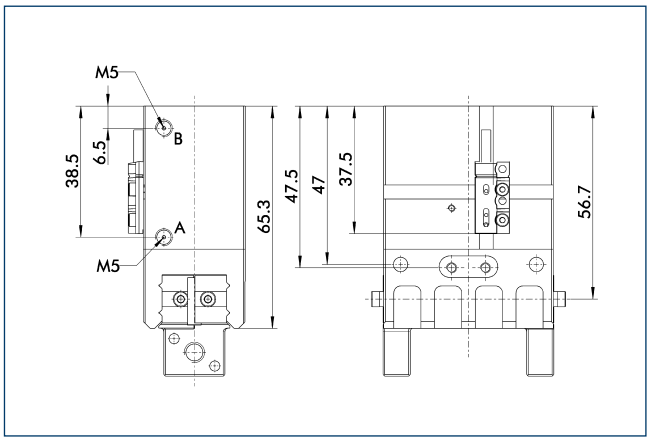

The mechanical maintenance of gripping force also assures a minimum gripping force in the case of a loss of pressure. With the AS / S variant, this acts as a closing force, and as an opening force for the IS variant. The maintenance of gripping force element can also be used as a means for increasing gripping force or for single actuated gripping.

Gripping force maintenance device IS

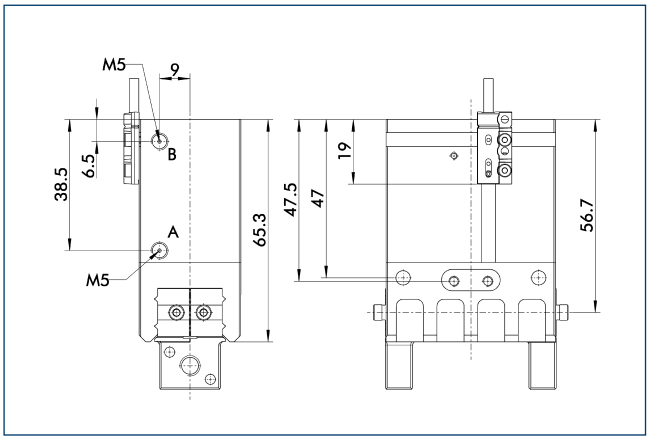

The mechanical maintenance of gripping force also assures a minimum gripping force in the case of a loss of pressure. With the AS / S variant, this acts as a closing force, and as an opening force for the IS variant. The maintenance of gripping force element can also be used as a means for increasing gripping force or for single actuated gripping.

Jaw design

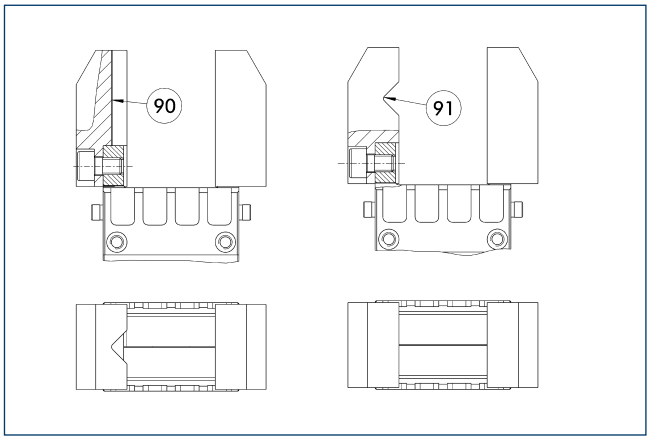

90 Vertical prism 91 Horizontal prism

A three-point support of the gripped workpiece is beneficial for gripping the workpiece with repeat accuracy and process reliability. More than three support points lead to a redundancy of the system. The drawing shows two alternative recommendations for the jaw design for coaxial and radial gripping of a cylindrical part.

Adapter plate

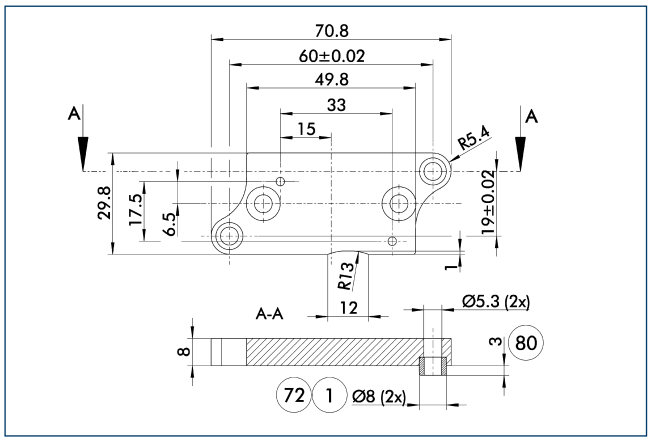

(1) Gripper connection
(72) Fit for centering sleeves
(80) Depth of the centering sleeve hole in the mating part

The adapter plate includes O-rings* for a hose-free direct connection, additional centering sleeves and screws for mounting the gripper.
*Only used with pneumatic actuators

Description	ID	
Adapter plate		
APL-MPG-plus 50	0305537	

ⓘ The adapter plate is a separately ordered, optional accessory.

SDV-P pressure maintenance valve

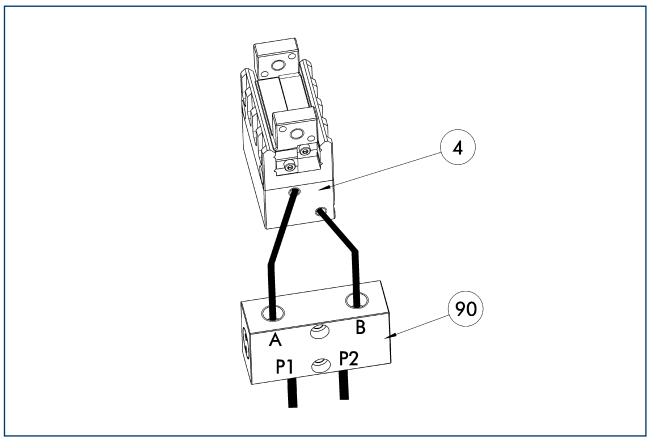

(4) Gripper
(90) SDV-P pressure maintenance valve

The SDV-P pressure maintenance valves ensure that the pressure in the piston chamber of pneumatic gripping, rotary, linear, and quick-change modules is maintained temporarily during an emergency stop.

Description	ID	
Pressure maintenance valve		
SDV-P 04	0403130	

Adapter plate

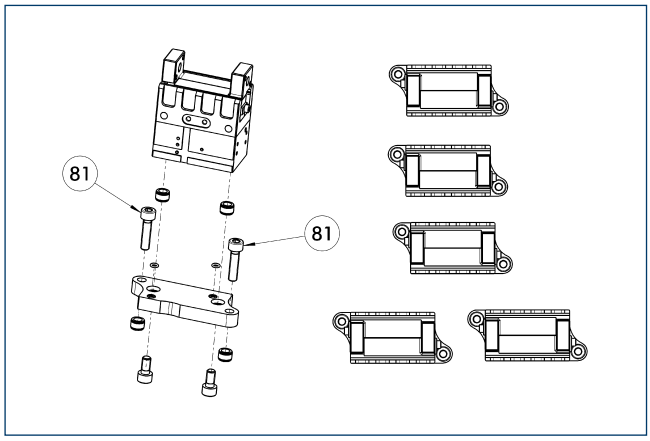

(81) Not included in the scope of delivery

The adapter plate includes O-rings* for a hose-free direct connection, additional centering sleeves and screws for mounting the gripper.
*Only used with pneumatic actuators

Description	ID	
Adapter plate		
APL-MPG-plus 50	0305537	

ⓘ The adapter plate is a separately ordered, optional accessory.

Finger blanks with BSWS ABR-BSWS-MPG-plus 50

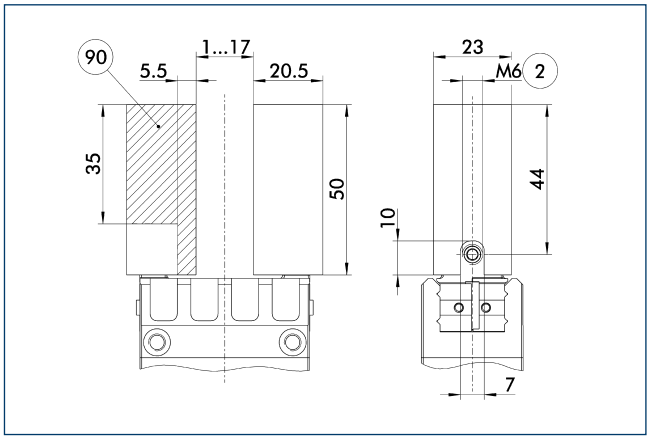

(2) Finger connection
(90) Machining volume

Finger blanks for customized subsequent machining with integrated jaw quick-change system for precise and fast finger changes.

Description	ID	
Finger blanks with jaw quick-change system		
ABR-BSWS-MPG-plus 50	0302897	

Finger blanks with BSWS

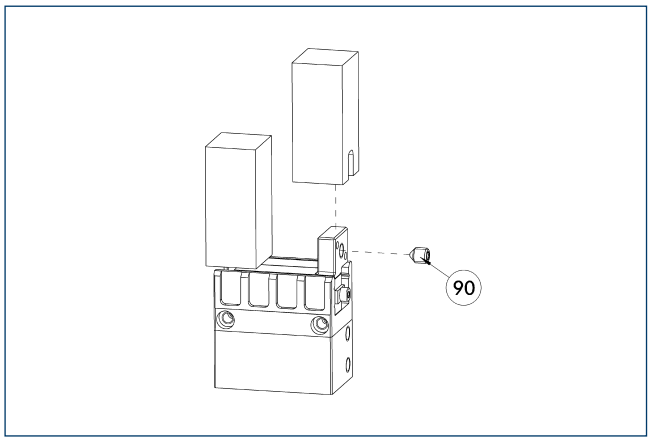

(90) Included in the jaw quick-change system's scope of delivery

The top jaw blanks with jaw quick-change system allow for fast and manual top jaw change on the gripper and already have the mechanical interface to the gripper. All the customer needs to do is integrate the workpiece-specific geometry into the blank.

Description	ID	
Finger blanks with jaw quick-change system		
ABR-BSWS-MPG-plus 50	0302897	

ABR-MPG-plus 50 finger blanks

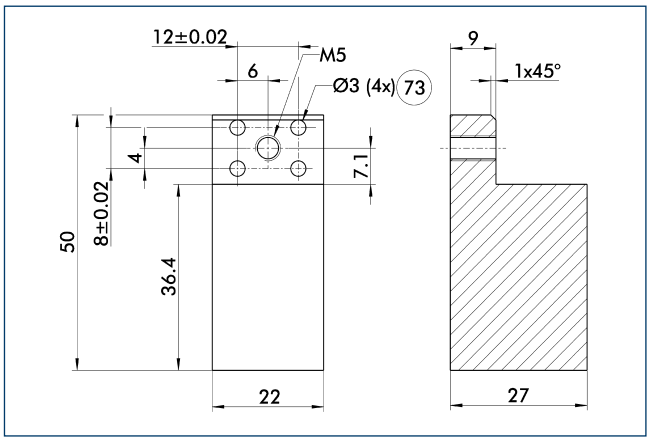

(73) Fit for centering pins

Finger blanks for customized subsequent machining.

Description	ID	Material	Scope of delivery
Finger blanks			
ABR-MPG-plus 50	0340214	Aluminum	2

OAS-MPG-plus 50 object distance sensor

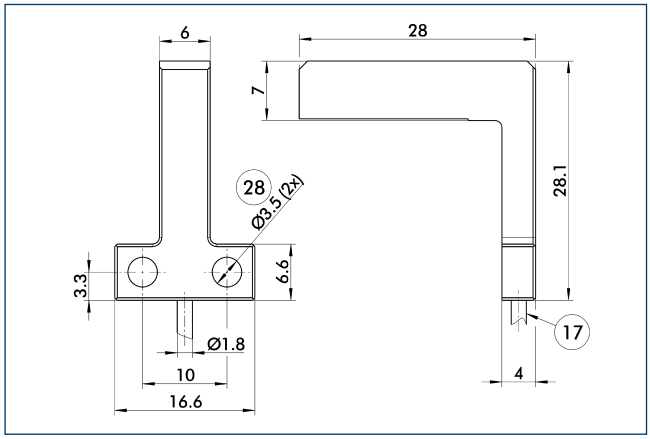

(17) Cable outlet (28) Through-bore

Description	ID	
Object distance sensor		
OAS-MPG-plus 50	0308894	

Object distance sensor

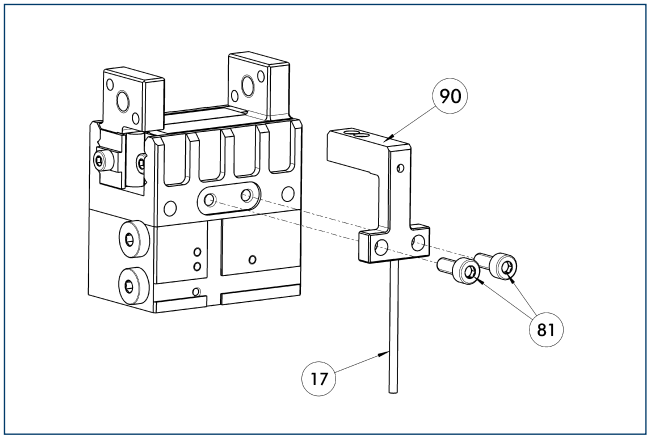

(17) Cable outlet (90) OAS
(81) Not included in the scope of delivery

Optical distance and presence sensor for direct mounting on the gripper. One OAS sensor per gripper can be assembled.

Description	ID	
Object distance sensor		
OAS-MPG-plus 50	0308894	
Electronic processor		
OAS-V09-D	0308865	
OAS-V10-A	0308867	
OAS-V10-D	0308866	

ⓘ The evaluation of the OAS can be done with either an analog or digital evaluation unit and with or without a display. The states which should be detected can be simply taught.

Attachment valves

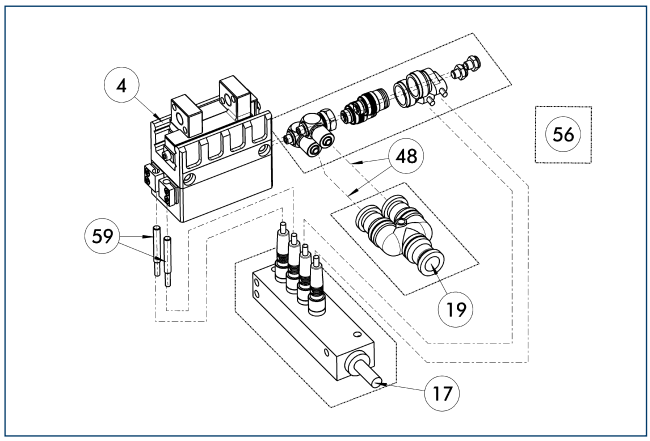

(4) Gripper
(17) Cable outlet
(19) Air connection
(48) Hose
(56) Included in delivery
(59) Monitoring gripping

For each unit one attachment valve ABV is required, optional with distributor for sensors and valves. Attachment valves increase the efficiency, reduce the installation work and air consumption and simplify air supply. For details please refer to the "Accessories" catalog section.

Description	ID	Often combined
Attachment valves		
ABV-MV15-M5	0303323	
ABV-MV15-M5-V2-M8	0303386	
ABV-MV15-M5-V4-M8	0303356	●
ABV-MV15-M5-V8-M8	0303357	

Modular assembly automation

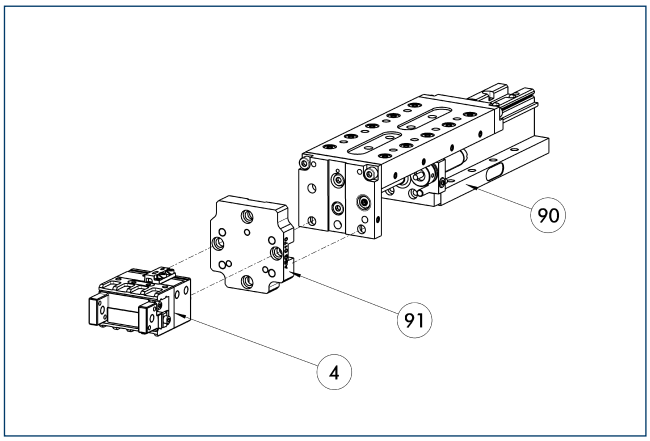

(4) Gripper
(90) CLM / KLM / LM / ELM / ELS / HLM linear module
(91) ASG adapter plate

Gripper and linear modules can be combined with standard adapters out of the modular assembly system. For more information see our catalog "Modular Assembly Automation".

Mounting kit for IN 40 proximity switches

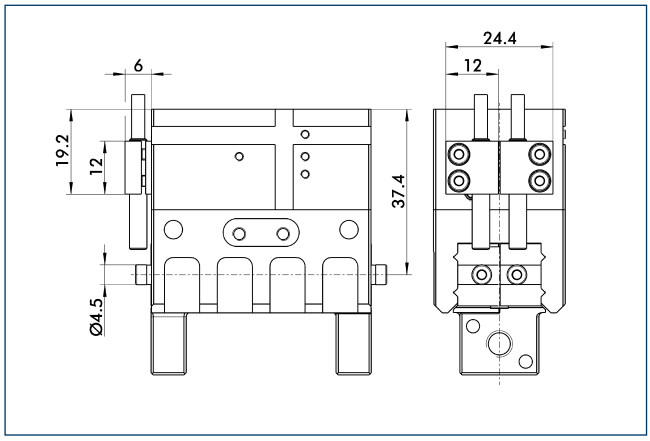

The mounting kit comprises mount, switching lug / cam and mounting screws. Proximity switches must be ordered separately.

Description	ID	
Mounting kit for proximity switch		
AS-IN40-MPG-plus 50	0305535	

ⓘ This mounting kit needs to be ordered optionally as an accessory.

IN 40 inductive proximity switches

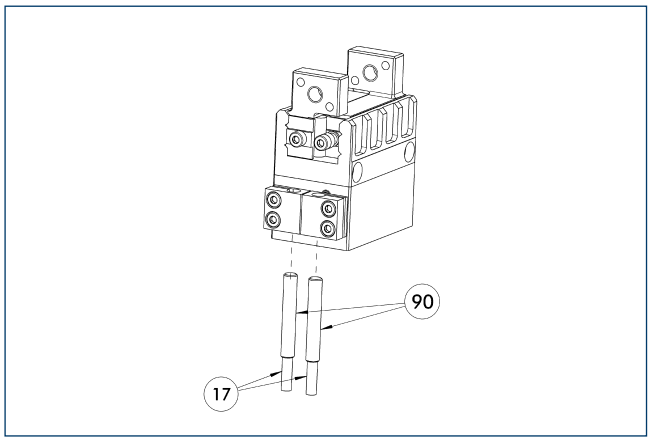

17 Cable outlet
90 IN ... sensor

Limit position monitor can be mounted with mounting kit.

Description	ID	Often combined
Mounting kit for proximity switch		
AS-IN40-MPG-plus 50	0305535	
Inductive proximity switches		
IN 40-S-M12	0301574	
IN 40-S-M8	0301474	●
INK 40-S	0301555	
Cable extensions		
KV BG12-SG12 3P-0030-PNP	0301999	
KV BG12-SG12 3P-0060-PNP	0301998	
KV BW08-SG08 3P-0030-PNP	0301495	
KV BW08-SG08 3P-0100-PNP	0301496	
KV BW08-SG08 3P-0200-PNP	0301497	●
KV BW12-SG12 3P-0030-PNP	0301595	
KV BW12-SG12 3P-0100-PNP	0301596	
KV BW12-SG12 3P-0200-PNP	0301597	
Clip for plug / socket		
CLI-M12	0301464	
CLI-M8	0301463	
Connection cables		
KA BG08-L 3P-0300-PNP	0301622	●
KA BG08-L 3P-0500-PNP	0301623	
KA BG12-L 3P-0500-PNP	30016369	
KA BW08-L 3P-0300-PNP	0301594	
KA BW08-L 3P-0500-PNP	0301502	
KA BW12-L 3P-0300-PNP	0301503	
KA BW12-L 3P-0500-PNP	0301507	
Sensor distributor		
V2-M8	0301775	●
V2-M12	0301776	●
V4-M12	0301747	
V4-M8	0301746	
V8-M12	0301752	
V8-M8	0301751	

ⓘ Two sensors (closer/S) are required for each unit, plus extension cables as an option. This mounting kit needs to be ordered optionally as an accessory. Please note the minimum permitted bending radii for the sensor cables, which are generally 35 mm.

Mounting kit for IN 5 proximity switches

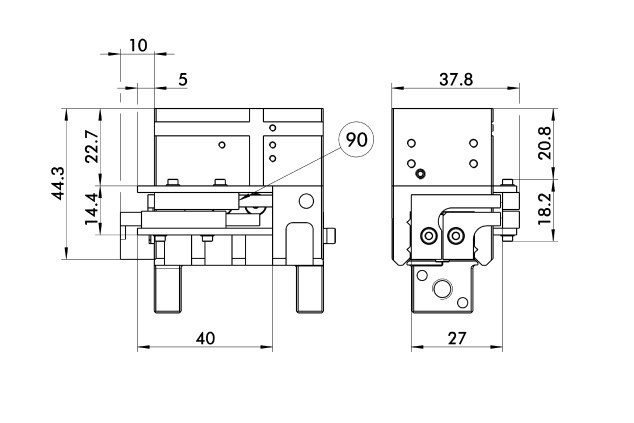

(90) IN ... sensor

The mounting kit comprises mount, switching lug / cam and mounting screws. Proximity switches must be ordered separately.

Description	ID	
Mounting kit for proximity switch		
AS-IN5-MPG-plus 50	0340153	

ⓘ This mounting kit needs to be ordered optionally as an accessory.

IN 5 inductive proximity switches

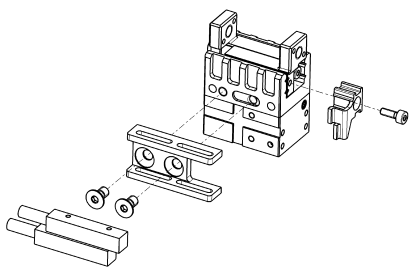

Limit position monitor can be mounted with mounting kit.

Description	ID	Often combined
Mounting kit for proximity switch		
AS-IN5-MPG-plus 50	0340153	
Inductive proximity switches		
IN 5-S-M12	0301569	
IN 5-S-M8	0301469	●
Cable extensions		
KV BG12-SG12 3P-0030-PNP	0301999	
KV BG12-SG12 3P-0060-PNP	0301998	
KV BW08-SG08 3P-0030-PNP	0301495	
KV BW08-SG08 3P-0100-PNP	0301496	
KV BW08-SG08 3P-0200-PNP	0301497	●
KV BW12-SG12 3P-0030-PNP	0301595	
KV BW12-SG12 3P-0100-PNP	0301596	
KV BW12-SG12 3P-0200-PNP	0301597	
Clip for plug / socket		
CLI-M12	0301464	
CLI-M8	0301463	
Connection cables		
KA BG08-L 3P-0300-PNP	0301622	●
KA BG08-L 3P-0500-PNP	0301623	
KA BG12-L 3P-0500-PNP	30016369	
KA BW08-L 3P-0300-PNP	0301594	
KA BW08-L 3P-0500-PNP	0301502	
KA BW12-L 3P-0300-PNP	0301503	
KA BW12-L 3P-0500-PNP	0301507	
Sensor distributor		
V2-M8	0301775	●
V2-M12	0301776	●
V4-M12	0301747	
V4-M8	0301746	
V8-M12	0301752	
V8-M8	0301751	

ⓘ Two sensors (closer/S) are required for each unit, plus extension cables as an option. This mounting kit needs to be ordered optionally as an accessory. Please note the minimum permitted bending radii for the sensor cables, which are generally 35 mm.

Mounting kit for FPS

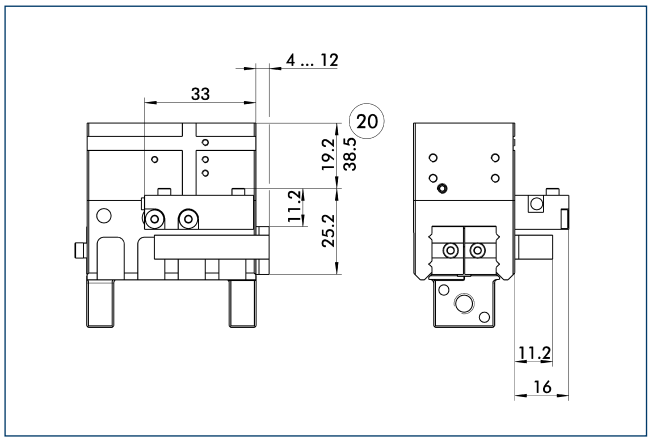

20 For AS / IS version

The following FPS position sensor can differentiate between five programmable areas and/or switching points for the stroke of a gripper, and can be used in combination with a PC as a measuring system.

Description	ID	
Mounting kit for FPS		
AS-FPS-MPG-plus 50	0301763	

ⓘ This mounting kit needs to be ordered optionally as an accessory.

Flexible position sensor

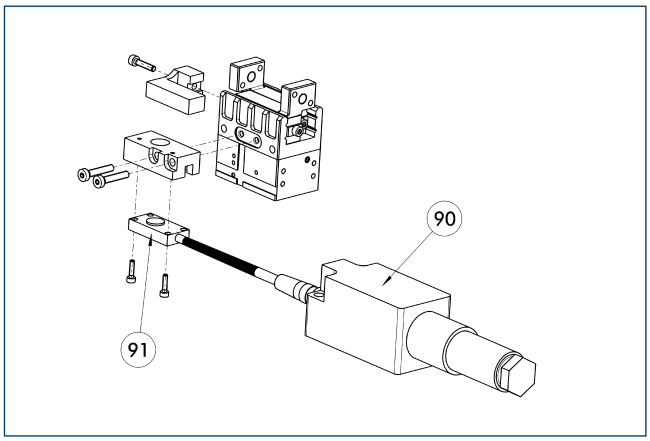

90 FPS-F5 / -F5 T electronic processor

91 FPS-S sensor

Flexible position monitoring of up to five positions.

Description	ID	Often combined
Mounting kit for FPS		
AS-FPS-MPG-plus 50	0301763	
Sensor		
FPS-S 13	0301705	
Electronic processor		
FPS-F5	0301805	●
FPS-F5 T	0301807	

ⓘ When using a FPS system, a FPS sensor (FPS-S) and a control unit (FPS-F5 / F5 T) are required for each gripper as well as a mounting kit (AS), if listed. Cable extensions (KV) are available as options in the "Accessories" catalog section.

MMS-P programmable magnetic switches

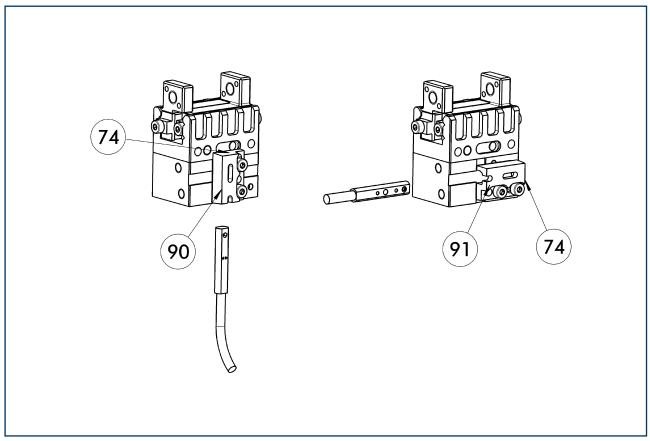

(74) Stop for MMS-P
(90) Vertical mounting of the sensor bracket
(91) Horizontal mounting of the sensor bracket

Position monitoring with two programmable positions per sensor. The end position monitoring is mounted in the C-slot.

Description	ID	Often combined
MMS-P programmable magnetic switches		
MMSK-P 22-S-PNP	0301371	
MMS-P 22-S-M8-PNP	0301370	●
Clip for plug / socket		
CLI-M8	0301463	
Connection cables		
KA BG08-L 4P-0500	0307767	●
KA BG08-L 4P-1000	0307768	
KA BW08-L 4P-0500	0307765	
KA BW08-L 4P-1000	0307766	
Sensor distributor		
V2-M8-4P-2XM8-3P	0301380	

ⓘ Is delivered with the sensor bracket (90) mounted in the vertical orientation. To use the sensor in a horizontal orientation, the sensor bracket can be horizontally assembled (91). The mounting bracket has an internal stop for the MMS-P sensor (74).

MMS-A analog position sensor

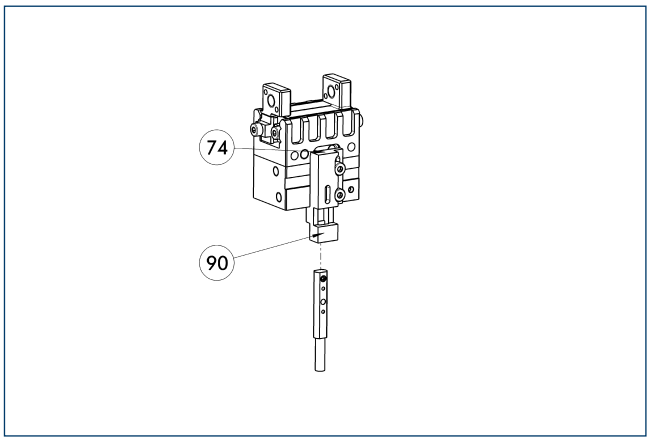

(74) Stop for MMS-P
(90) Vertical mounting of the sensor bracket

Contactlessly measuring, analog multi-position monitoring for any number of positions.

Description	ID	
Analog position sensor		
MMS 22-A-05V-M08	0315800	
MMS 22-A-10V-M08	0315820	

ⓘ One sensor is needed for each gripper. No additional mounting kit is needed – the standard gripper is equipped for use of the MMS-A.

MPG-plus 64

SCHUNK Grippers pneumatic | 2-Finger Parallel Grippers | Miniature Parallel Gripper

Gripping force, O.D. gripping

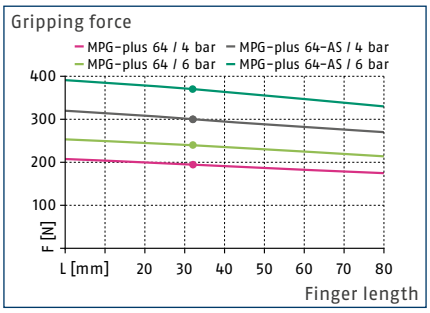

Gripping force, I.D. gripping

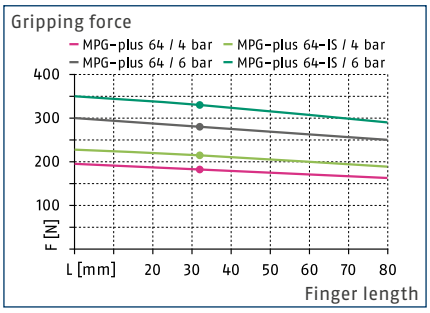

Finger load

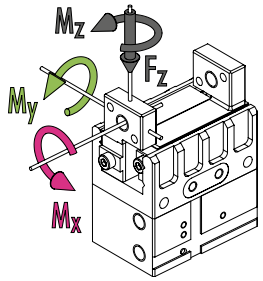

M_x max. 3.5 Nm
M_z max. 9 Nm
M_y max. 6 Nm
F_z max. 250 N

ⓘ The indicated moments and forces are static values, apply per base jaw and may occur simultaneously. M_y may arise in addition to the moment generated by the gripping force itself. If the max. permitted finger weight is exceeded, it is impreative to throttle the air supply so that the jaw movement occurs without any hitting or bouncing. Service life may be reduced.

Technical data

Description		MPG-plus 64	MPG-plus 64-AS	MPG-plus 64-IS
ID		0305541	0305542	0305543
Stroke per jaw	[mm]	10	10	10
Closing- / opening force	[N]	300/280	370/-	-/335
min. spring force	[N]		70	55
Weight	[kg]	0.53	0.62	0.63
Recommended workpiece weight	[kg]	1.25	1.25	1.25
Fluid consumption per double stroke	[cm³]	15	27	24.5
min. / max. operating pressure	[bar]	2/8	4/6.5	4/6.5
Nominal operating pressure	[bar]	6	6	6
Closing- / opening time	[s]	0.045/0.045	0.05/0.08	0.08/0.05
Closing- / opening time only with spring	[s]		0.30	0.30
max. permitted finger length	[mm]	80	80	80
max. permitted weight per finger	[kg]	0.24	0.24	0.24
IP class		30	30	30
min. / max. ambient temperature	[°C]	5/90	5/90	5/90
Repeat accuracy	[mm]	0.02	0.02	0.02
Options and their characteristics				
High-temperature version		39305541	39305542	39305543
min. / max. ambient temperature	[°C]	5/100	5/100	5/100

Main view

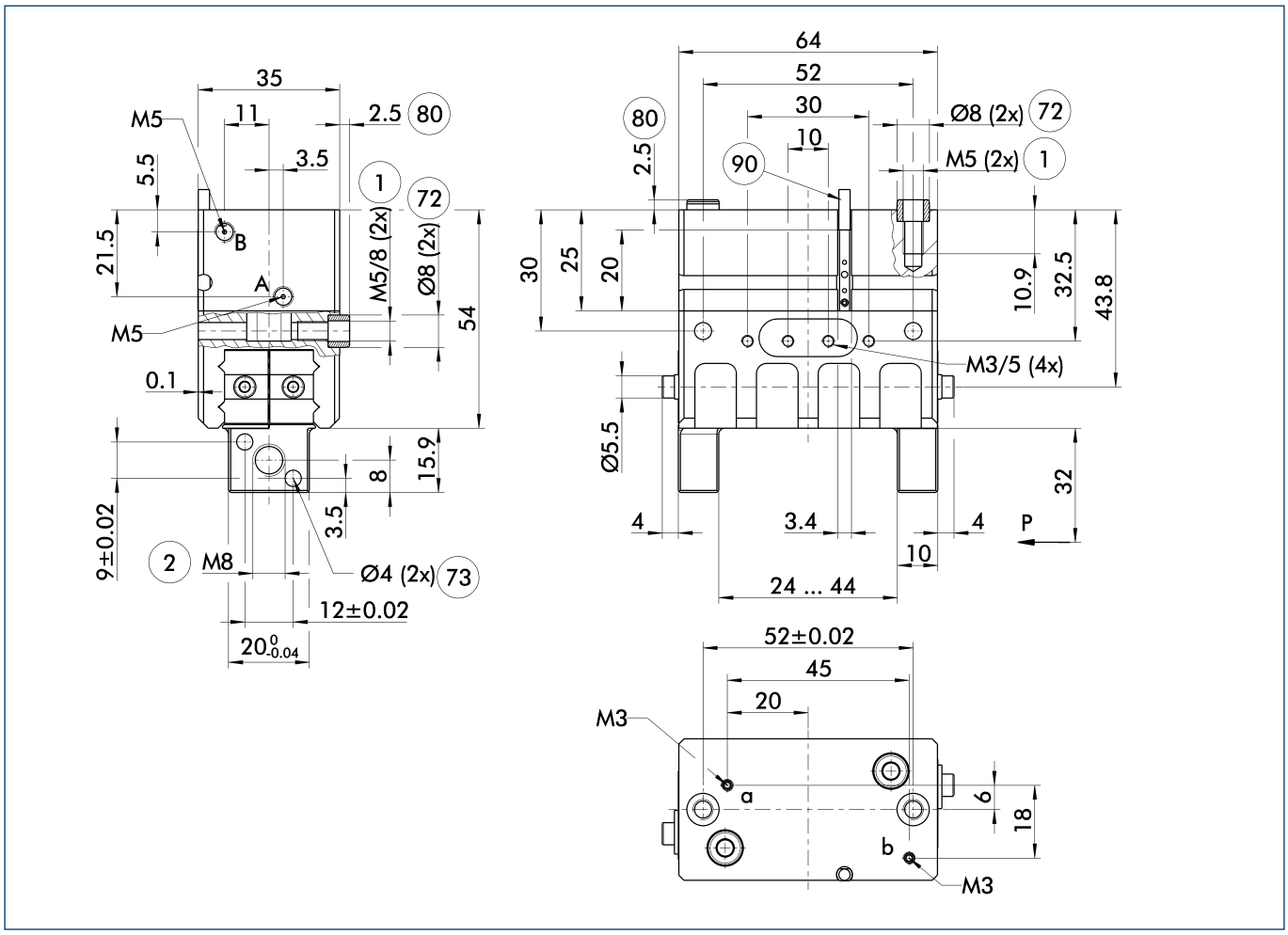

The drawing shows the basic version of the gripper with open jaws, without dimensional consideration of the options described below.

ⓘ The SDV-P pressure maintenance valve can also be used for I.D. or O.D. gripping alternatively or in addition to the spring-loaded, mechanical gripping force maintenance device (see catalog section on "Accessories").

A, a Main / direct connection, gripper opening

B, b Main / direct connection, gripper closing

(1) Gripper connection

(2) Finger connection

(72) Fit for centering sleeves

(73) Fit for centering pins

(80) Depth of the centering sleeve hole in the mating part

(90) MMS-P

Maximum permitted finger projection

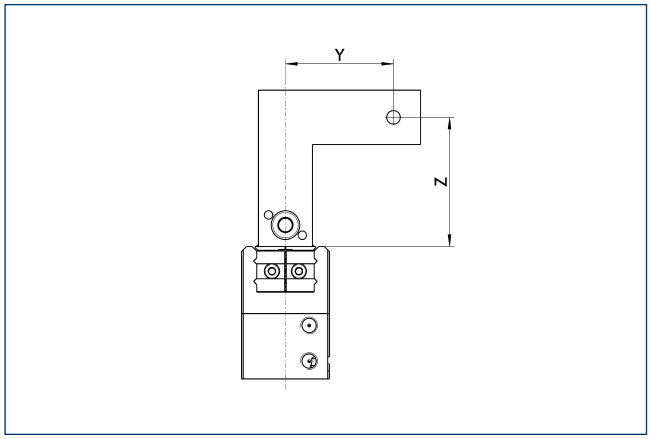

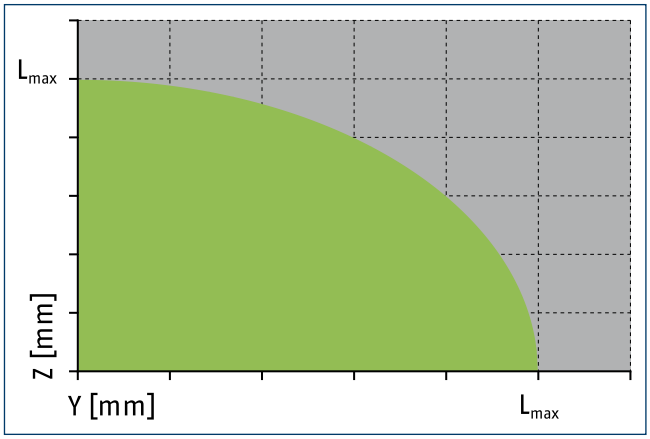

Permitted range

Inadmissible range

L_{max} is equivalent to the maximum permitted finger length, see the chart of technical specifications.

Monitoring for stacked arrangement

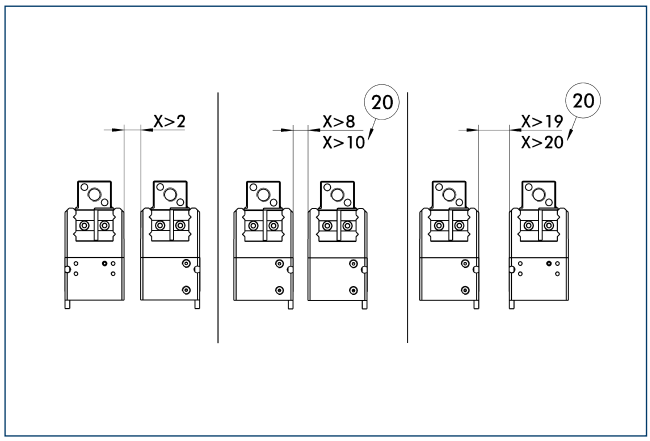

20 For AS / IS version

Caution: Monitoring is carried out by magnetic switches, and in case of side-by-side assembly of several units, a minimum distance of X mm between the units must be maintained.

Hose-free direct connection M3

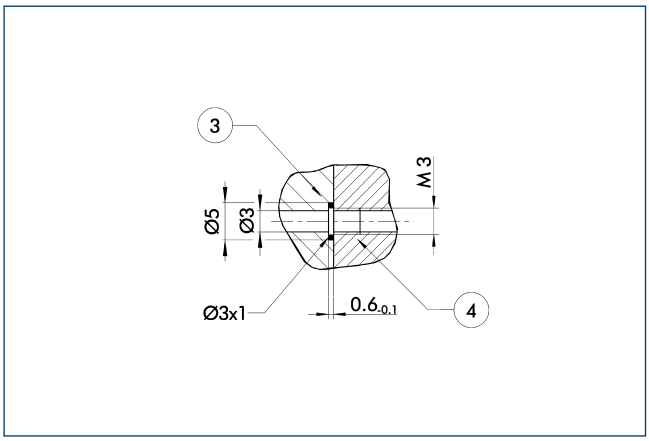

3 Adapter 4 Gripper

The direct connection is used for supplying compressed air without hoses. Instead, the pressure medium is fed through bore-holes in the mounting plate.

Gripping force maintenance device AS

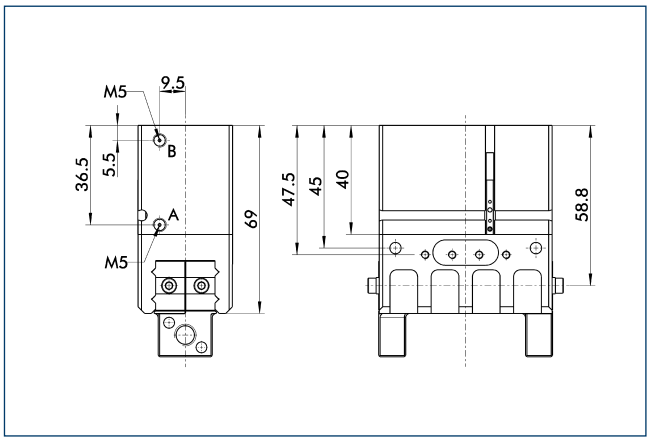

The mechanical maintenance of gripping force also assures a minimum gripping force in the case of a loss of pressure. With the AS / S variant, this acts as a closing force, and as an opening force for the IS variant. The maintenance of gripping force element can also be used as a means for increasing gripping force or for single actuated gripping.

Gripping force maintenance device IS

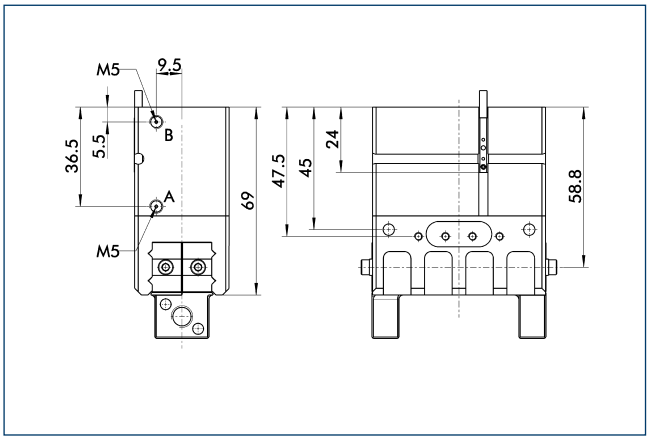

The mechanical maintenance of gripping force also assures a minimum gripping force in the case of a loss of pressure. With the AS / S variant, this acts as a closing force, and as an opening force for the IS variant. The maintenance of gripping force element can also be used as a means for increasing gripping force or for single actuated gripping.

Jaw design

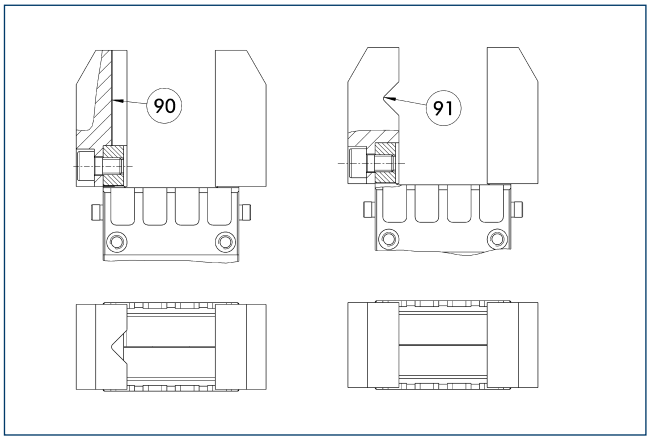

90 Vertical prism 91 Horizontal prism

A three-point support of the gripped workpiece is beneficial for gripping the workpiece with repeat accuracy and process reliability. More than three support points lead to a redundancy of the system. The drawing shows two alternative recommendations for the jaw design for coaxial and radial gripping of a cylindrical part.

Adapter plate

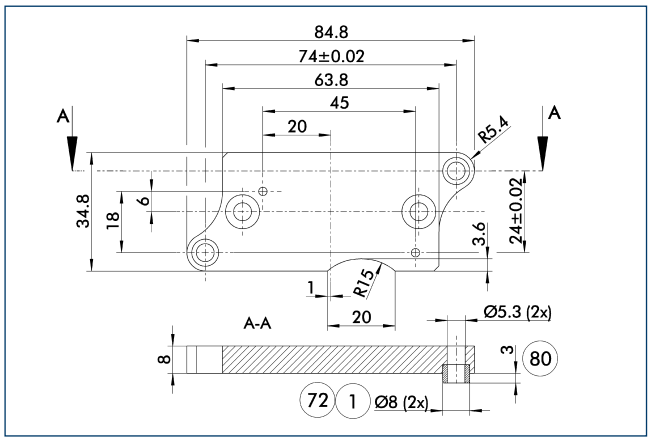

(1) Gripper connection
(72) Fit for centering sleeves
(80) Depth of the centering sleeve hole in the mating part

The adapter plate includes O-rings* for a hose-free direct connection, additional centering sleeves and screws for mounting the gripper.
*Only used with pneumatic actuators.

Description	ID	
Adapter plate		
APL-MPG-plus 64	0305547	

ⓘ The adapter plate is a separately ordered, optional accessory.

SDV-P pressure maintenance valve

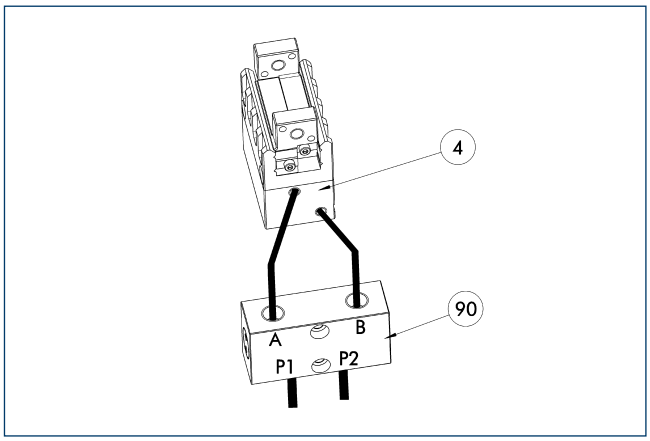

(4) Gripper
(90) SDV-P pressure maintenance valve

The SDV-P pressure maintenance valves ensure that the pressure in the piston chamber of pneumatic gripping, rotary, linear, and quick-change modules is maintained temporarily during an emergency stop.

Description	ID	
Pressure maintenance valve		
SDV-P 04	0403130	

Adapter plate

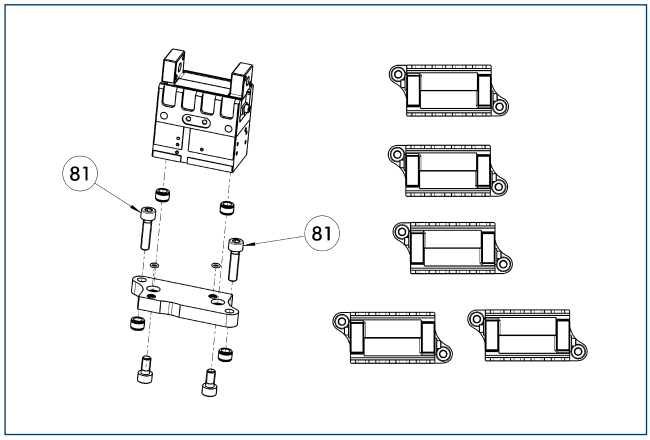

(81) Not included in the scope of delivery

The adapter plate includes O-rings* for a hose-free direct connection, additional centering sleeves and screws for mounting the gripper.
*Only used with pneumatic actuators.

Description	ID	
Adapter plate		
APL-MPG-plus 64	0305547	

ⓘ The adapter plate is a separately ordered, optional accessory.

Finger blanks with BSWS ABR-BSWS-MPG-plus 64

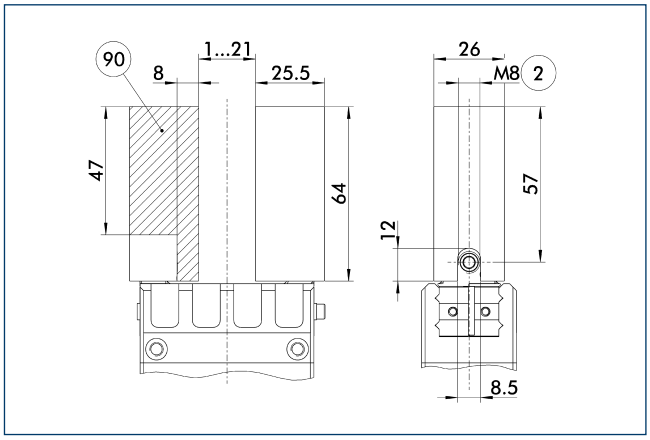

(2) Finger connection
(90) Machining volume

Finger blanks for customized subsequent machining with integrated jaw quick-change system for precise and fast finger changes.

Description	ID	
Finger blanks with jaw quick-change system		
ABR-BSWS-MPG-plus 64	0302898	

Finger blanks with BSWS

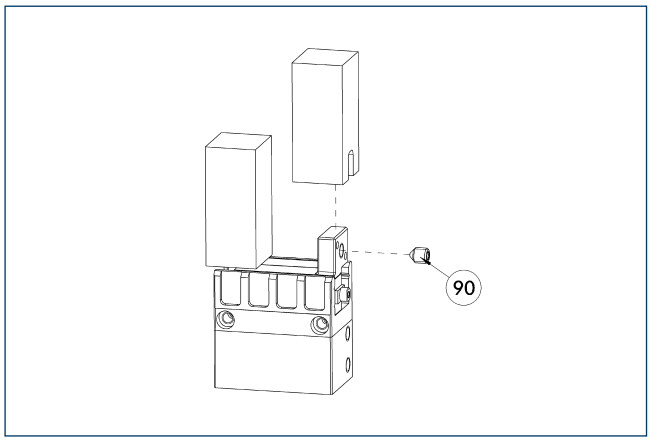

(90) Included in the jaw quick-change system's scope of delivery

The top jaw blanks with jaw quick-change system allow for fast and manual top jaw change on the gripper and already have the mechanical interface to the gripper. All the customer needs to do is integrate the workpiece-specific geometry into the blank.

Description	ID	
Finger blanks with jaw quick-change system		
ABR-BSWS-MPG-plus 64	0302898	

ABR-MPG-plus 64 finger blanks

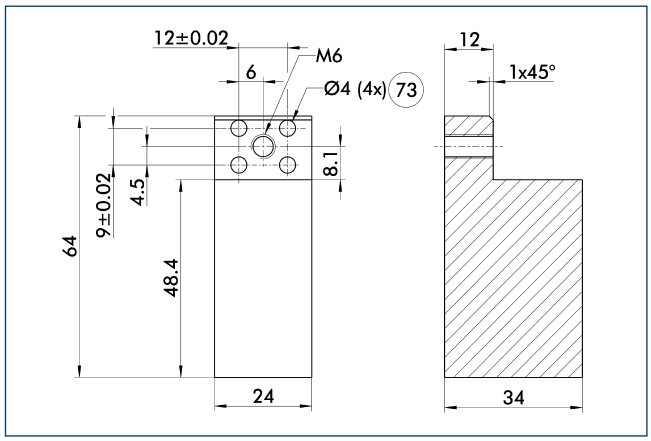

(73) Fit for centering pins

Finger blanks for customized subsequent machining.

Description	ID	Material	Scope of delivery
Finger blanks			
ABR-MPG-plus 64	0340215	Aluminum	2

OAS-MPG-plus 64 object distance sensor

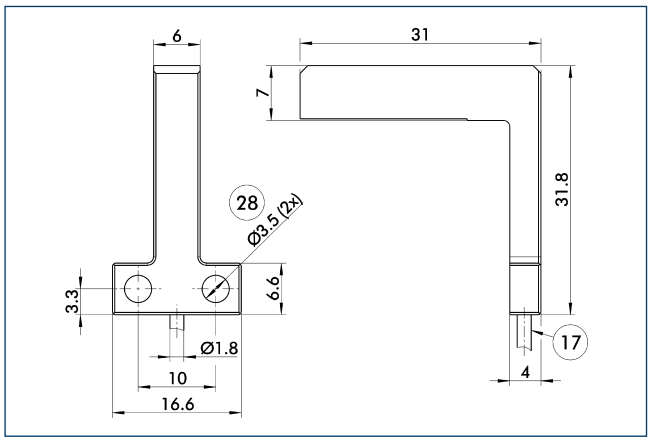

(17) Cable outlet (28) Through-bore

Description	ID	
Object distance sensor		
OAS-MPG-plus 64	0308895	

Object distance sensor

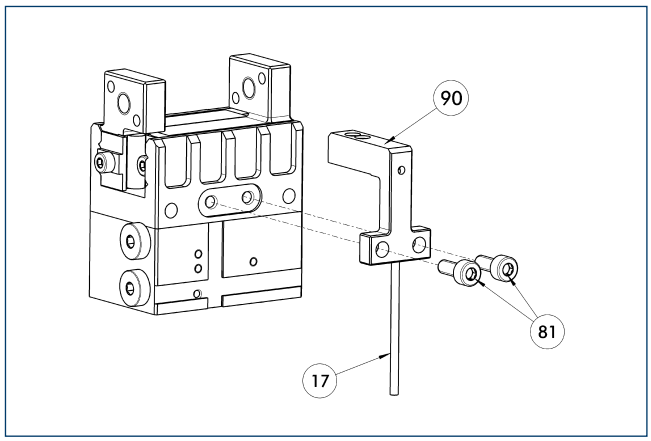

(17) Cable outlet (90) OAS
(81) Not included in the scope of delivery

Optical distance and presence sensor for direct mounting on the gripper. One OAS sensor per gripper can be assembled.

Description	ID	
Object distance sensor		
OAS-MPG-plus 64	0308895	
Electronic processor		
OAS-V09-D	0308865	
OAS-V10-A	0308867	
OAS-V10-D	0308866	

ⓘ The evaluation of the OAS can be done with either an analog or digital evaluation unit and with or without a display. The states which should be detected can be simply taught.

Modular assembly automation

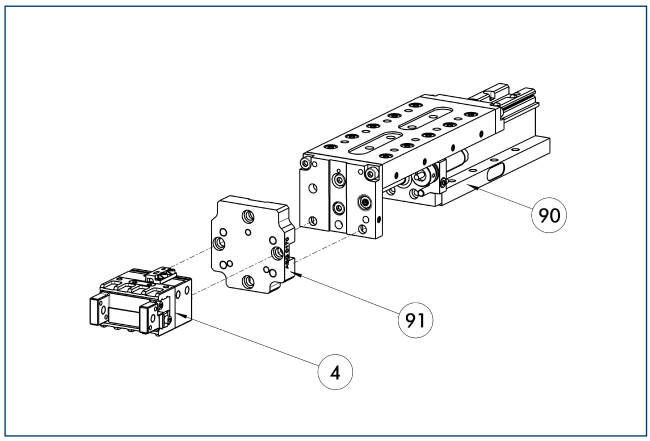

(4) Gripper
(91) ASG adapter plate
(90) CLM / KLM / LM / ELM / ELS / HLM linear module

Gripper and linear modules can be combined with standard adapters out of the modular assembly system. For more information see our catalog "Modular Assembly Automation".

Mounting kit for IN 40 proximity switches

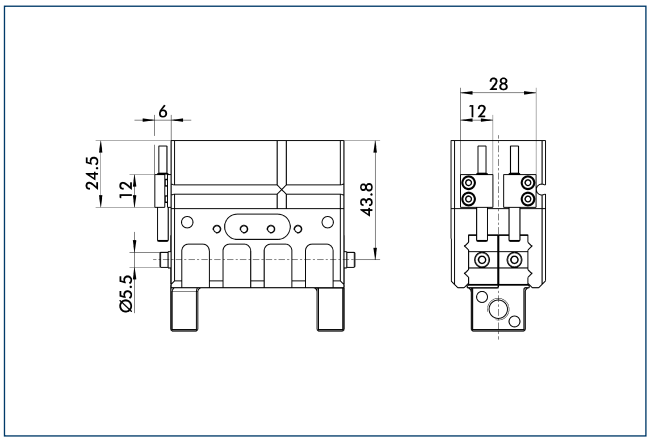

The mounting kit comprises mount, switching lug / cam and mounting screws. Proximity switches must be ordered separately.

Description	ID	
Mounting kit for proximity switch		
AS-IN40-MPG-plus	0305545	

ⓘ This mounting kit needs to be ordered optionally as an accessory.

Attachment valves

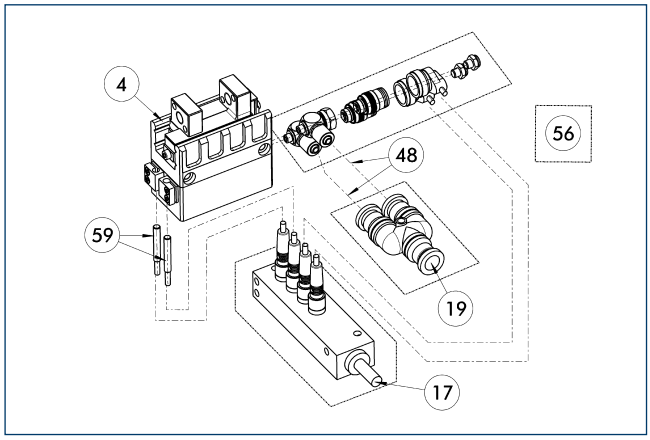

(4) Gripper
(17) Cable outlet
(19) Air connection
(48) Hose
(56) Included in delivery
(59) Monitoring gripping

For each unit one attachment valve ABV is required, optional with distributor for sensors and valves. Attachment valves increase the efficiency, reduce the installation work and air consumption and simplify air supply. For details please refer to the "Accessories" catalog section.

Description	ID	Often combined
Attachment valves		
ABV-MV25-M5	0303326	
ABV-MV25-M5-V2-M8	0303392	
ABV-MV25-M5-V4-M8	0303362	●
ABV-MV25-M5-V8-M8	0303363	

IN 40 inductive proximity switches

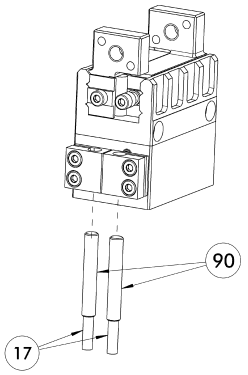

(17) Cable outlet (90) IN ... sensor

Limit position monitor can be mounted with mounting kit.

Description	ID	Often combined
Mounting kit for proximity switch		
AS-IN40-MPG-plus	0305545	
Inductive proximity switches		
IN 40-S-M12	0301574	
IN 40-S-M8	0301474	●
INK 40-S	0301555	
Cable extensions		
KV BG12-SG12 3P-0030-PNP	0301999	
KV BG12-SG12 3P-0060-PNP	0301998	
KV BW08-SG08 3P-0030-PNP	0301495	
KV BW08-SG08 3P-0100-PNP	0301496	
KV BW08-SG08 3P-0200-PNP	0301497	●
KV BW12-SG12 3P-0030-PNP	0301595	
KV BW12-SG12 3P-0100-PNP	0301596	
KV BW12-SG12 3P-0200-PNP	0301597	
Clip for plug / socket		
CLI-M12	0301464	
CLI-M8	0301463	
Connection cables		
KA BG08-L 3P-0300-PNP	0301622	●
KA BG08-L 3P-0500-PNP	0301623	
KA BG12-L 3P-0500-PNP	30016369	
KA BW08-L 3P-0300-PNP	0301594	
KA BW08-L 3P-0500-PNP	0301502	
KA BW12-L 3P-0300-PNP	0301503	
KA BW12-L 3P-0500-PNP	0301507	
Sensor distributor		
V2-M8	0301775	●
V2-M12	0301776	●
V4-M12	0301747	
V4-M8	0301746	
V8-M12	0301752	
V8-M8	0301751	

ⓘ Two sensors (closer/S) are required for each unit, plus extension cables as an option. This mounting kit needs to be ordered optionally as an accessory. Please note the minimum permitted bending radii for the sensor cables, which are generally 35 mm.

Mounting kit for IN 5 proximity switches

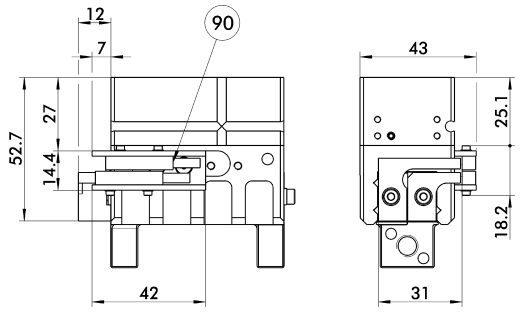

(90) IN ... sensor

The mounting kit comprises mount, switching lug / cam and mounting screws. Proximity switches must be ordered separately.

Description	ID	
Mounting kit for proximity switch		
AS-MPG 64	0340154	

ⓘ This mounting kit needs to be ordered optionally as an accessory.

IN 5 inductive proximity switches

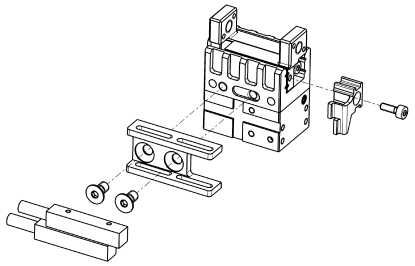

Limit position monitor can be mounted with mounting kit.

Description	ID	Often combined
Mounting kit for proximity switch		
AS-MPG 64	0340154	
Inductive proximity switches		
IN 5-S-M12	0301569	
IN 5-S-M8	0301469	●
Cable extensions		
KV BG12-SG12 3P-0030-PNP	0301999	
KV BG12-SG12 3P-0060-PNP	0301998	
KV BW08-SG08 3P-0030-PNP	0301495	
KV BW08-SG08 3P-0100-PNP	0301496	
KV BW08-SG08 3P-0200-PNP	0301497	●
KV BW12-SG12 3P-0030-PNP	0301595	
KV BW12-SG12 3P-0100-PNP	0301596	
KV BW12-SG12 3P-0200-PNP	0301597	
Clip for plug / socket		
CLI-M12	0301464	
CLI-M8	0301463	
Connection cables		
KA BG08-L 3P-0300-PNP	0301622	●
KA BG08-L 3P-0500-PNP	0301623	
KA BG12-L 3P-0500-PNP	30016369	
KA BW08-L 3P-0300-PNP	0301594	
KA BW08-L 3P-0500-PNP	0301502	
KA BW12-L 3P-0300-PNP	0301503	
KA BW12-L 3P-0500-PNP	0301507	
Sensor distributor		
V2-M8	0301775	●
V2-M12	0301776	●
V4-M12	0301747	
V4-M8	0301746	
V8-M12	0301752	
V8-M8	0301751	

ⓘ Two sensors (closer/S) are required for each unit, plus extension cables as an option. This mounting kit needs to be ordered optionally as an accessory. Please note the minimum permitted bending radii for the sensor cables, which are generally 35 mm.

Mounting kit for FPS

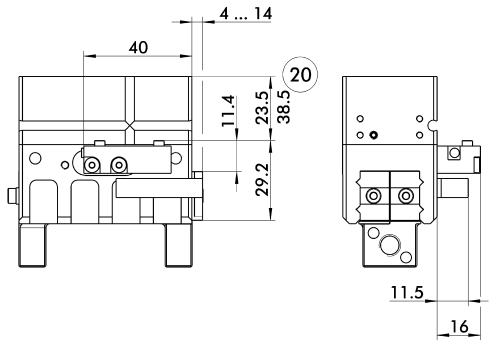

(20) For AS / IS version

The following FPS position sensor can differentiate between five programmable areas and/or switching points for the stroke of a gripper, and can be used in combination with a PC as a measuring system.

Description	ID	
Mounting kit for FPS		
AS-FPS-MPG 64	0301764	

ⓘ This mounting kit needs to be ordered optionally as an accessory.

Flexible position sensor

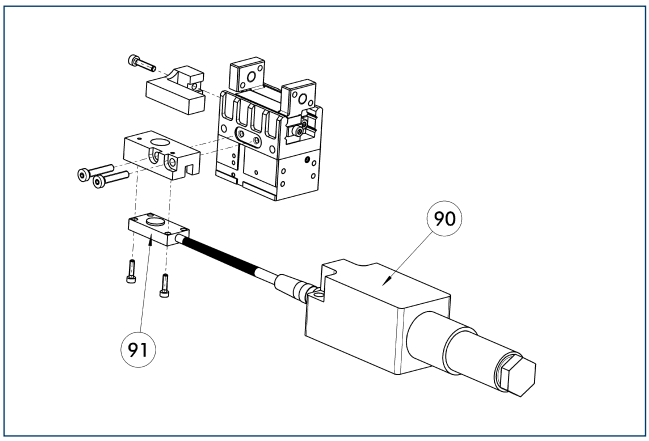

(90) FPS-F5 / -F5 T electronic processor

(91) FPS-S sensor

Flexible position monitoring of up to five positions.

Description	ID	Often combined
Mounting kit for FPS		
AS-FPS-MPG 64	0301764	
Sensor		
FPS-S 13	0301705	
Electronic processor		
FPS-F5	0301805	●
FPS-F5 T	0301807	

ⓘ When using a FPS system, a FPS sensor (FPS-S) and a control unit (FPS-F5 / F5 T) are required for each gripper as well as a mounting kit (AS), if listed. Cable extensions (KV) are available as options in the "Accessories" catalog section.

MMS-A analog position sensor

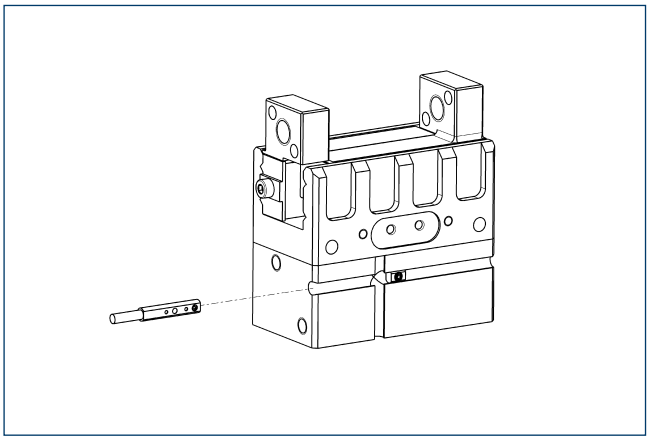

Contactlessly measuring, analog multi-position monitoring for any number of positions.

Description	ID	
Analog position sensor		
MMS 22-A-05V-M08	0315800	
MMS 22-A-10V-M08	0315820	

ⓘ One sensor is needed for each gripper. No additional mounting kit is needed – the standard gripper is equipped for use of the MMS-A.

MMS-P programmable magnetic switches

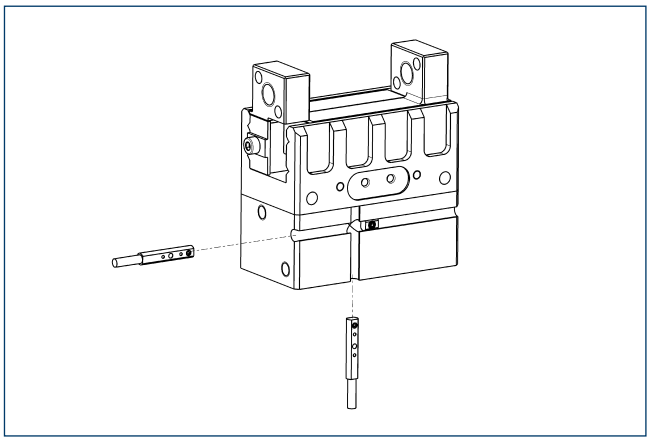

Position monitoring with two programmable positions per sensor. The end position monitoring is mounted in the C-slot.

Description	ID	Often combined
MMS-P programmable magnetic switches		
MMSK-P 22-S-PNP	0301371	
MMS-P 22-S-M8-PNP	0301370	●
Clip for plug / socket		
CLI-M8	0301463	
Connection cables		
KA BG08-L 4P-0500	0307767	●
KA BG08-L 4P-1000	0307768	
KA BW08-L 4P-0500	0307765	
KA BW08-L 4P-1000	0307766	
Sensor distributor		
V2-M8-4P-2XM8-3P	0301380	

ⓘ Per unit one sensor (closer/S) is required, optionally a cable extension. Please note the minimum permitted bending radii for the sensor cables, which are generally 35 mm.

Precise. Compact. Reliable.
MPG Miniature Parallel Gripper

2-finger parallel gripper with smooth running base jaws guided on roller bearings

Field of Application

Gripping and moving of small to medium-sized workpieces in low contaminated environments, such as assembly, testing, laboratory, and pharmaceutical industry

Advantages – Your benefit

Cross roller guidance for precise gripping through base jaw guidance with minimum play

Base jaws guided on double roller bearings ensuring low friction and smooth running actuation

Mounting from two sides in three screw directions for universal and flexible gripper assembly

Air supply via hose-free direct connection or screw connections for flexible pressure supply in all automated systems

Sizes	Weight	Gripping force	Stroke per jaw	Workpiece weight
Quantity: 9	0.01 .. 0.7 kg	7 .. 270 N	1 .. 10 mm	0.05 .. 1.0 kg

Functional Description

The piston is moved up or down by compressed air. The side hooks at the upper end of the piston rod guide in the angular slots of both base jaws, and thus transform this movement into the synchronized opening or closing of the base fingers.

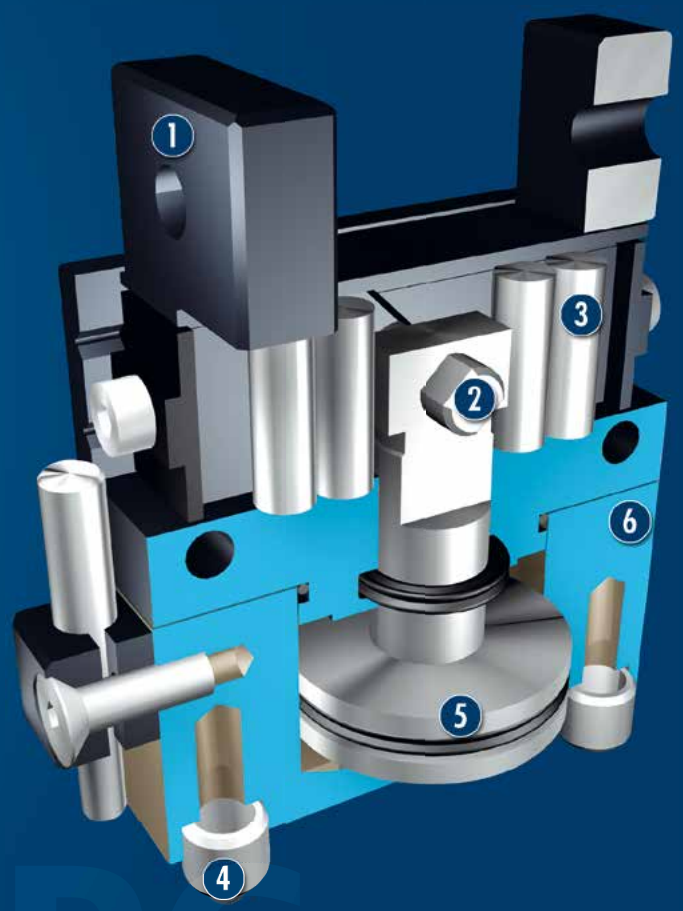

① **Base jaw**
for the connection of workpiece-specific gripper fingers

② **Wedge-hook design**
for high power transmission and centric gripping

③ **Cross roller guidance**
Precise gripping through base jaw guide with minimum play

④ **Centering and mounting possibilities**
for assembly of the gripper to a base area and at the long side

⑤ **Drive**
Double-acting piston drive system

⑥ **Housing**
Weight-optimized through application of high-strength aluminum alloy

CAD data, operating manuals and other current product documents are available at **www.schunk.com**

General Notes about the Series

Operating principle: Wedge-hook kinematics

Housing material: Aluminum alloy, anodized

Cover material: Steel

Base jaw material: Steel

Actuation: pneumatic, with filtered compressed air as per DIN ISO 8573-1: 7 4 4

Warranty: 24 months (details, general terms and conditions and operating manuals can be downloaded at www.schunk.com)

Scope of delivery: Mount for proximity switch, centering sleeves, O-rings for direct connection, assembly and operating manual with declaration of incorporation.

Gripping force maintenance device: possible with variants with mechanical maintenance of gripping force or SDV-P pressure maintenance valve

Gripping force: is the arithmetic total of the gripping force applied to each gripper jaw at distance P (see illustration).

Finger length: is measured from the upper edge of the gripper housing in the direction of the main axis. The breach of the max. permitted finger length can bring higher abrasion. The maximum permissible finger length applies up to the nominal operating pressure. With higher pressures, the finger length must be reduced proportionally to the nominal operating pressure.

Repeat accuracy: is defined as the spread of the limit position after 100 consecutive strokes.

Workpiece weight: is calculated for a force-fit connection with a coefficient of friction of 0.1 and a safety factor of 2 against slippage of the workpiece on acceleration due to gravity g. Considerably heavier workpiece weights are permitted with form-fit gripping.

Closing and opening times: are purely the times that the base jaws or fingers are in motion. Valve switching times, hose filling times or PLC reaction times are not included in the above times and must be taken into consideration when determining cycle times.

Application example

Pneumatically driven, two axis assembly machine for small components

1. MPG 2-Finger Parallel Gripper with standard finger blanks
2. CLM Mini-slide for vertical movement
3. CLM Mini-slide for horizontal movement

SCHUNK offers more ...

The following components make the product MPG even more productive – the suitable addition for the highest functionality, flexibility, reliability, and controlled production.

Sensor System

Sensor Cables

Sensor Distributor

Flexible Position Sensor

Fittings

SDV-P Pressure Maintenance Valve

Finger Blanks

Switching Valve

Gripper Pads

Carbide Clamping Inserts

Plastic Inserts

Centering Sleeves

ⓘ Further information regarding the products can be found on the following product pages or at www.schunk.com. Please contact us for further information: SCHUNK technical hotline +49-7133-103-2696

Options and special Information

Gripping force maintenance version AS / IS: The mechanical gripping force maintenance version ensures a minimum gripping force also in the case of a drop in pressure. In the AS / S version this has the effect of a closing force, in the IS version of an opening force.
Additional mounting bores: for centering the fingers via sleeves, instead of normal mounting surfaces. Special versions on request.

MPG 10

SCHUNK Grippers pneumatic | 2-Finger Parallel Grippers | Miniature Parallel Gripper

Gripping force, O.D. gripping

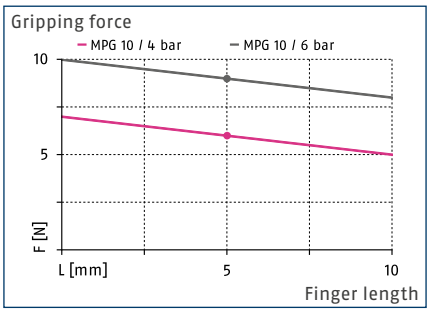

Gripping force, I.D. gripping

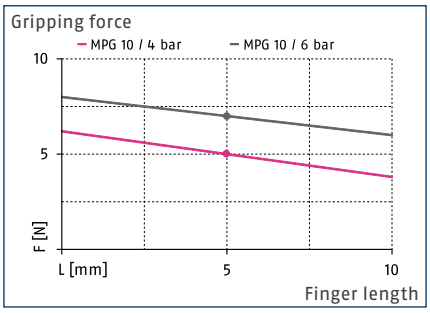

Finger load

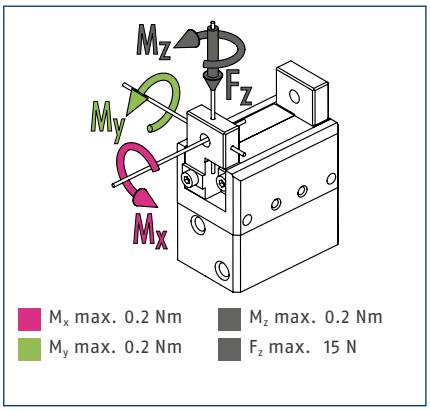

ⓘ The indicated moments and forces are static values, apply per base jaw and may occur simultaneously. M_y may arise in addition to the moment generated by the gripping force itself. If the max. permitted finger weight is exceeded, it is impreative to throttle the air supply so that the jaw movement occurs without any hitting or bouncing. Service life may be reduced.

Technical data

Description		MPG 10
ID		0340006
Stroke per jaw	[mm]	1
Closing- / opening force	[N]	9/7
Weight	[kg]	0.01
Recommended workpiece weight	[kg]	0.05
Fluid consumption per double stroke	[cm³]	0.12
min. / max. operating pressure	[bar]	3/6
Nominal operating pressure	[bar]	6
Closing- / opening time	[s]	0.01/0.01
max. permitted finger length	[mm]	10
max. permitted weight per finger	[kg]	0.01
IP class		30
min. / max. ambient temperature	[°C]	5/90
Repeat accuracy	[mm]	0.02
Cleanroom class ISO 14644-1		5

Main view

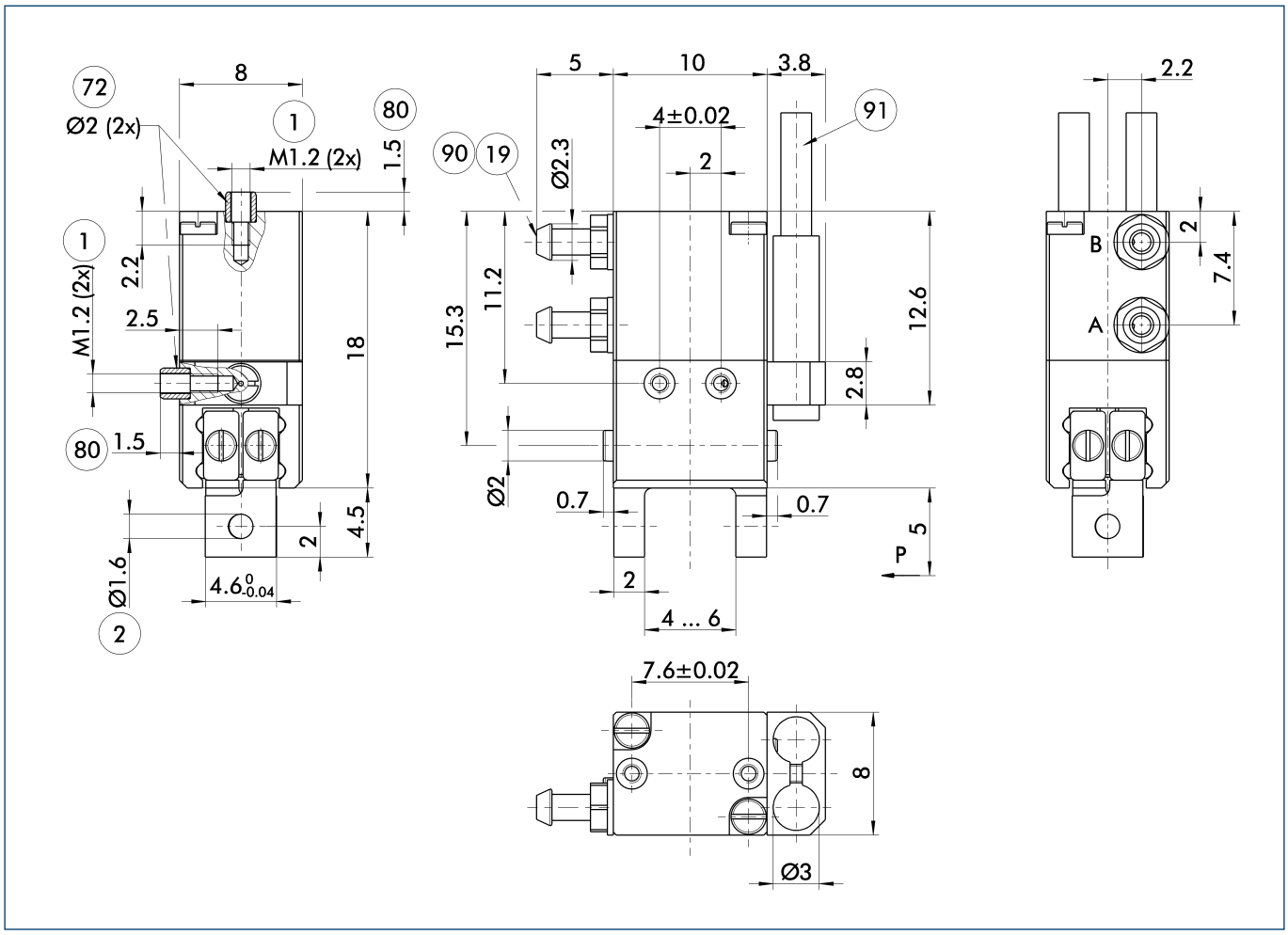

The drawing shows the basic version of the gripper with open jaws, without dimensional consideration of the options described below.

ⓘ The SDV-P pressure maintenance valve can be used as a gripping force maintenance device (see catalog section on "Accessories").

A, a Main / direct connection, gripper opening

B, b Main / direct connection, gripper closing

(1) Gripper connection

(2) Finger connection

(19) Air connection

(72) Fit for centering sleeves

(80) Depth of the centering sleeve hole in the mating part

(90) Bosch-Rexroth compressed air hose, TU1-S (Ø 3.0 – 0.6) series, Order no.: 1820712066 (-67/-68/-69)

(91) IN ... sensor

Maximum permitted finger projection

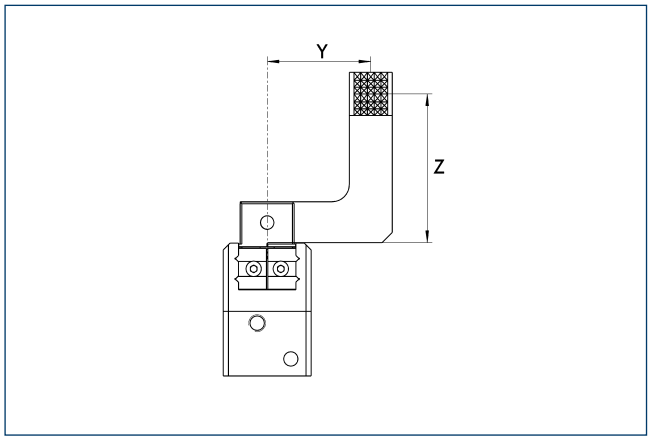

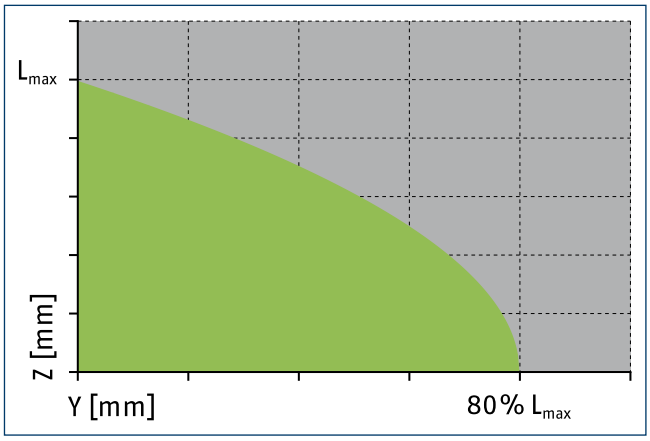

Permitted range

Inadmissible range

L_{max} is equivalent to the maximum permitted finger length, see the chart of technical specifications.

Jaw design

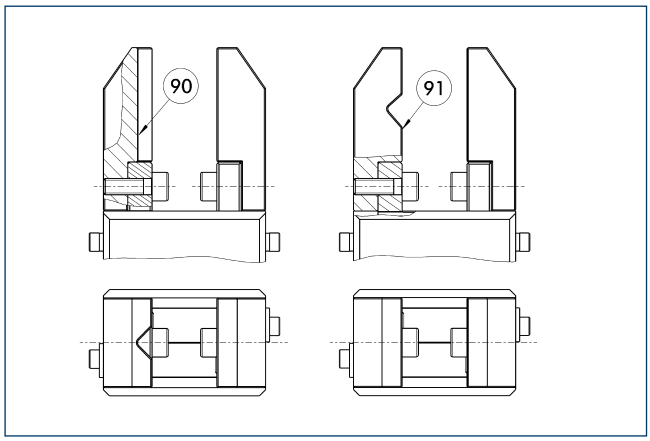

90 Vertical prism

91 Horizontal prism

A three-point support of the gripped workpiece is beneficial for gripping the workpiece with repeat accuracy and process reliability. More than three support points lead to a redundancy of the system. The drawing shows two alternative recommendations for the jaw design for coaxial and radial gripping of a cylindrical part.

SDV-P pressure maintenance valve

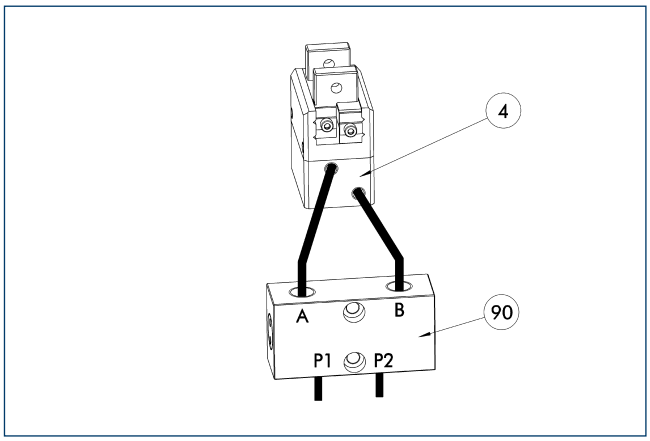

4 Gripper

90 SDV-P pressure maintenance valve

The SDV-P pressure maintenance valves ensure that the pressure in the piston chamber of pneumatic gripping, rotary, linear, and quick-change modules is maintained temporarily during an emergency stop.

Description	ID	
Pressure maintenance valve		
SDV-P 04	0403130	

IN 3 inductive proximity switches

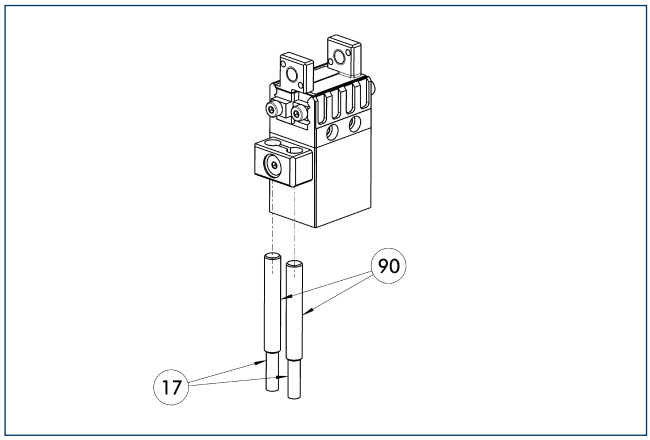

17 Cable outlet

90 IN ... sensor

Description	ID	Often combined
Inductive proximity switches		
IN 3-S-M8-PNP	0301466	●
Connection cables		
KA BG08-L 3P-0300-PNP	0301622	
KA BG08-L 3P-0500-PNP	0301623	
KA BW08-L 3P-0300-PNP	0301594	
KA BW08-L 3P-0500-PNP	0301502	
Cable extensions		
KV BW08-SG08 3P-0030-PNP	0301495	
KV BW08-SG08 3P-0100-PNP	0301496	
KV BW08-SG08 3P-0200-PNP	0301497	

ⓘ Two sensors (closer/S) are required for each unit, plus extension cables as an option. Please note the minimum permitted bending radii for the sensor cables, which are generally 35 mm.

MPG 12

SCHUNK Grippers pneumatic | 2-Finger Parallel Grippers | Miniature Parallel Gripper

Gripping force, O.D. gripping

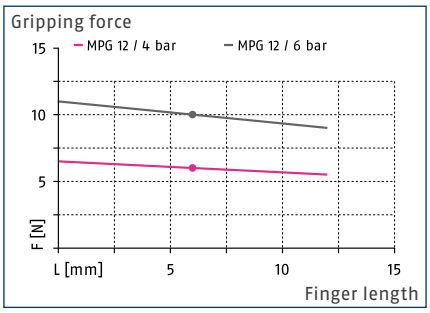

Gripping force, I.D. gripping

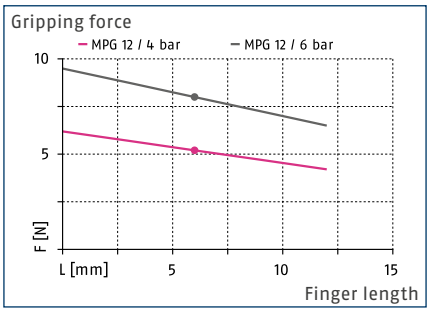

Finger load

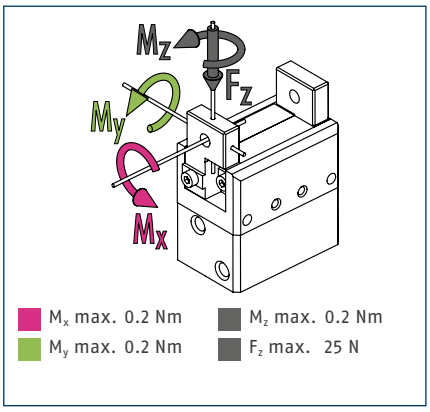

ⓘ The indicated moments and forces are static values, apply per base jaw and may occur simultaneously. M_y may arise in addition to the moment generated by the gripping force itself. If the max. permitted finger weight is exceeded, it is impreative to throttle the air supply so that the jaw movement occurs without any hitting or bouncing. Service life may be reduced.

Technical data

Description		MPG 12
ID		0340007
Stroke per jaw	[mm]	1.2
Closing- / opening force	[N]	10/8
Weight	[kg]	0.01
Recommended workpiece weight	[kg]	0.05
Fluid consumption per double stroke	[cm³]	0.17
min. / max. operating pressure	[bar]	3/6
Nominal operating pressure	[bar]	6
Closing- / opening time	[s]	0.01/0.01
max. permitted finger length	[mm]	12
max. permitted weight per finger	[kg]	0.01
IP class		30
min. / max. ambient temperature	[°C]	5/90
Repeat accuracy	[mm]	0.02
Cleanroom class ISO 14644-1		5

Main view

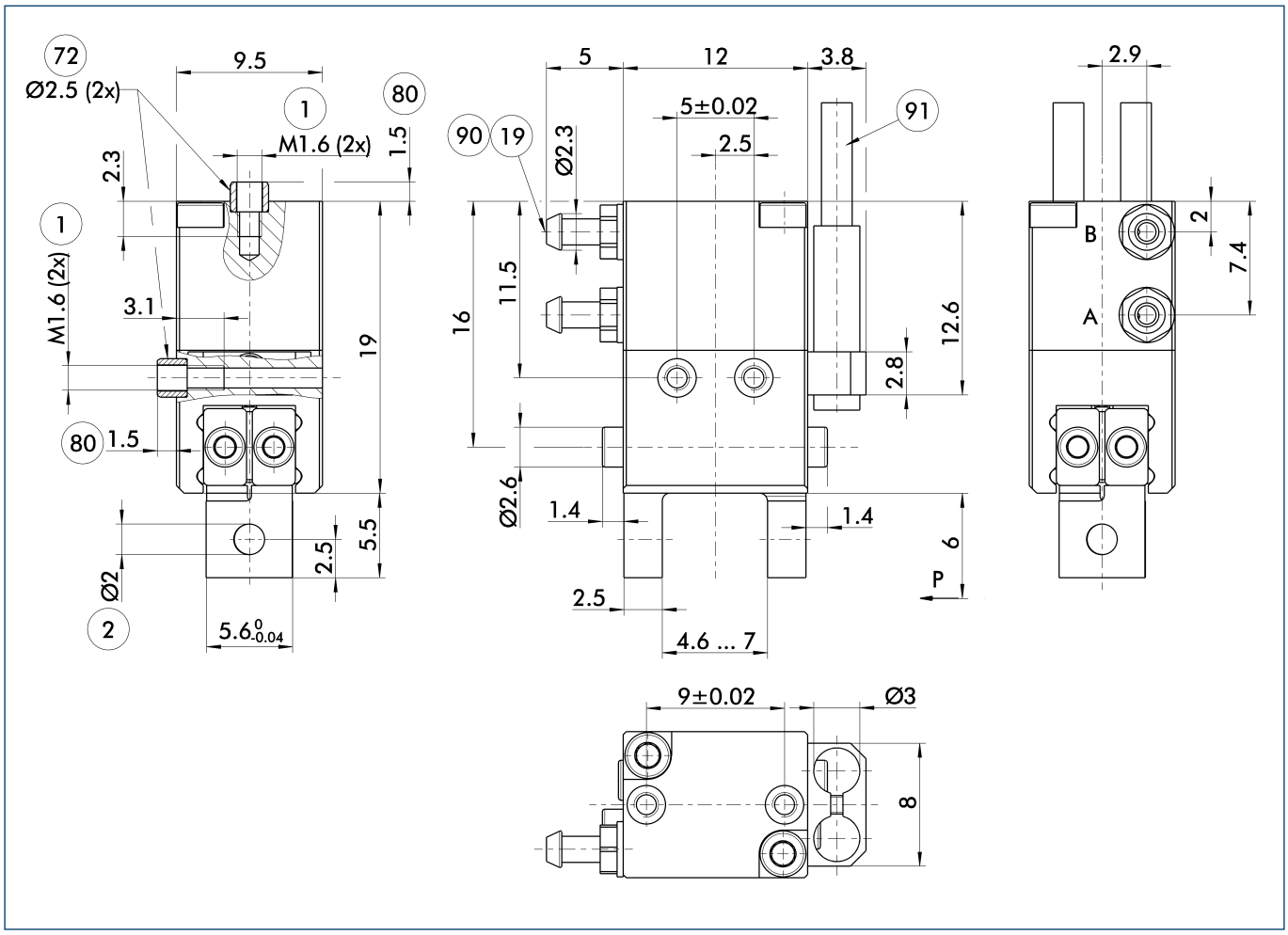

The drawing shows the basic version of the gripper with open jaws, without dimensional consideration of the options described below.

ⓘ The SDV-P pressure maintenance valve can be used as a gripping force maintenance device (see catalog section on "Accessories").

A, a Main / direct connection, gripper opening

B, b Main / direct connection, gripper closing

(1) Gripper connection

(2) Finger connection

(19) Air connection

(72) Fit for centering sleeves

(80) Depth of the centering sleeve hole in the mating part

(90) Bosch-Rexroth compressed air hose, TU1-S (Ø 3.0 – 0.6) series, Order no.: 1820712066 (-67/-68/-69)

(91) IN ... sensor

Maximum permitted finger projection

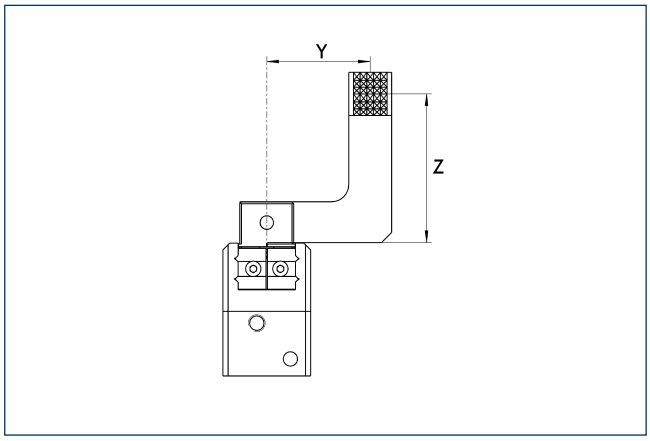

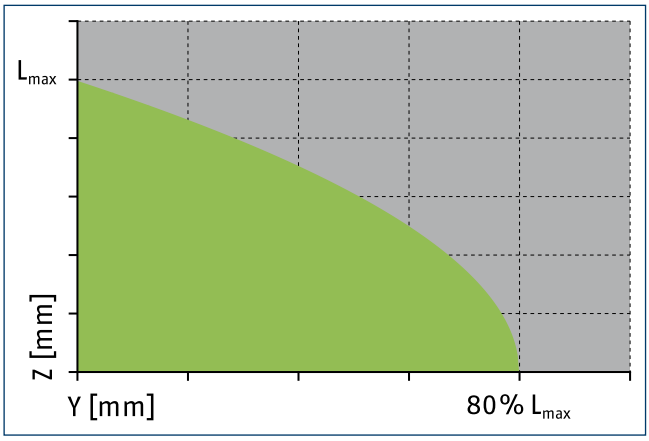

Permitted range

Inadmissible range

L_{max} is equivalent to the maximum permitted finger length, see the chart of technical specifications.

Jaw design

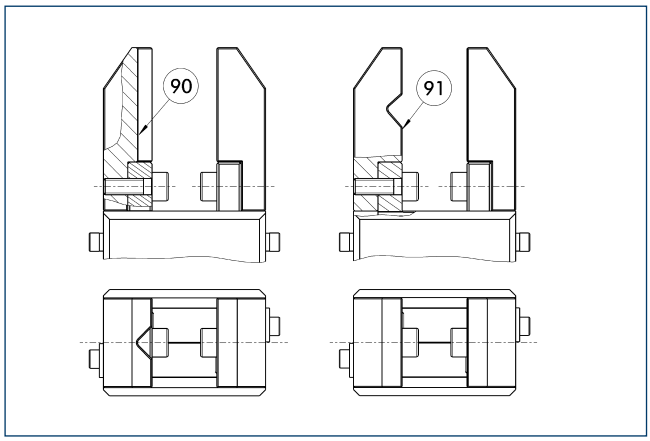

90 Vertical prism

91 Horizontal prism

A three-point support of the gripped workpiece is beneficial for gripping the workpiece with repeat accuracy and process reliability. More than three support points lead to a redundancy of the system. The drawing shows two alternative recommendations for the jaw design for coaxial and radial gripping of a cylindrical part.

SDV-P pressure maintenance valve

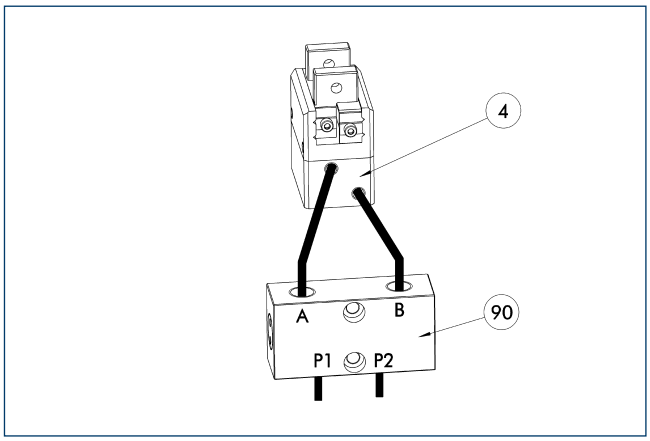

4 Gripper

90 SDV-P pressure maintenance valve

The SDV-P pressure maintenance valves ensure that the pressure in the piston chamber of pneumatic gripping, rotary, linear, and quick-change modules is maintained temporarily during an emergency stop.

Description	ID	
Pressure maintenance valve		
SDV-P 04	0403130	

IN 3 inductive proximity switches

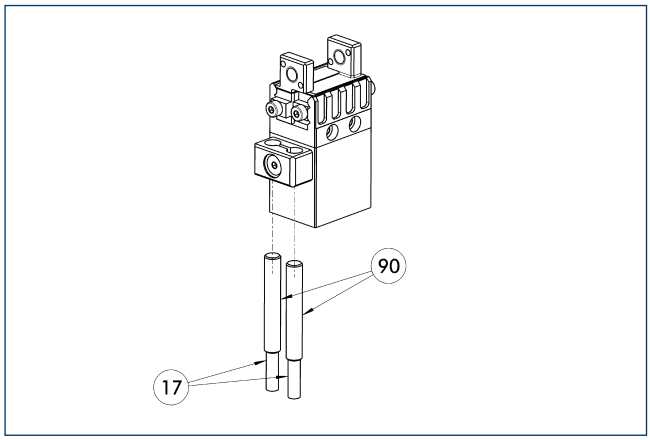

17 Cable outlet

90 IN ... sensor

Description	ID	Often combined
Inductive proximity switches		
IN 3-S-M8-PNP	0301466	●
Connection cables		
KA BG08-L 3P-0300-PNP	0301622	
KA BG08-L 3P-0500-PNP	0301623	
KA BW08-L 3P-0300-PNP	0301594	
KA BW08-L 3P-0500-PNP	0301502	
Cable extensions		
KV BW08-SG08 3P-0030-PNP	0301495	
KV BW08-SG08 3P-0100-PNP	0301496	
KV BW08-SG08 3P-0200-PNP	0301497	

ⓘ Two sensors (closer/S) are required for each unit, plus extension cables as an option. Please note the minimum permitted bending radii for the sensor cables, which are generally 35 mm.

MPG 16

SCHUNK Grippers pneumatic | 2-Finger Parallel Grippers | Miniature Parallel Gripper

Gripping force, O.D. gripping

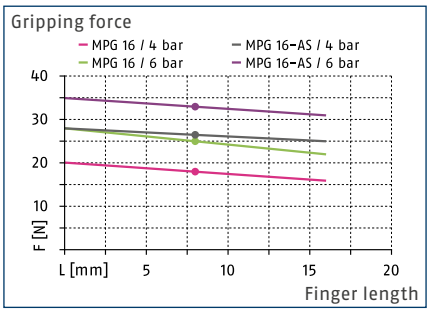

Gripping force, I.D. gripping

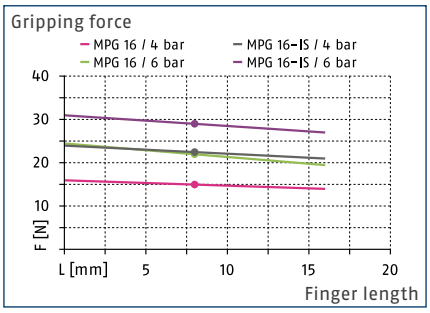

Finger load

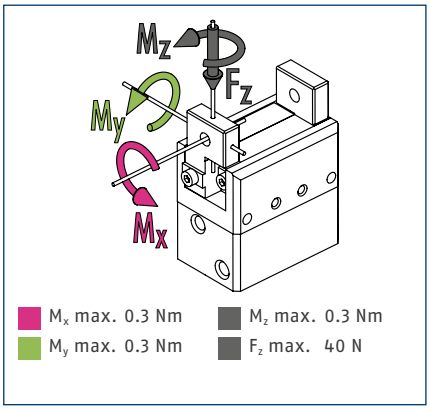

ⓘ The indicated moments and forces are static values, apply per base jaw and may occur simultaneously. M_y may arise in addition to the moment generated by the gripping force itself. If the max. permitted finger weight is exceeded, it is impreative to throttle the air supply so that the jaw movement occurs without any hitting or bouncing. Service life may be reduced.

Technical data

Description		MPG 16	MPG 16-AS	MPG 16-IS
ID		0340008	0340038	0340058
Stroke per jaw	[mm]	1.5	1.5	1.5
Closing- / opening force	[N]	25/22	33/-	-/29
min. spring force	[N]		8	7
Weight	[kg]	0.03	0.03	0.03
Recommended workpiece weight	[kg]	0.13	0.13	0.13
Fluid consumption per double stroke	[cm³]	0.34	0.64	0.53
min. / max. operating pressure	[bar]	2/8	4/6.5	4/6.5
Nominal operating pressure	[bar]	6	6	6
Closing- / opening time	[s]	0.01/0.01	0.01/0.025	0.025/0.01
Closing- / opening time only with spring	[s]		0.10	0.10
max. permitted finger length	[mm]	16	16	16
max. permitted weight per finger	[kg]	0.01	0.01	0.01
IP class		30	30	30
min. / max. ambient temperature	[°C]	5/90	5/90	5/90
Repeat accuracy	[mm]	0.02	0.02	0.02
Cleanroom class ISO 14644-1		5	5	5

Main view

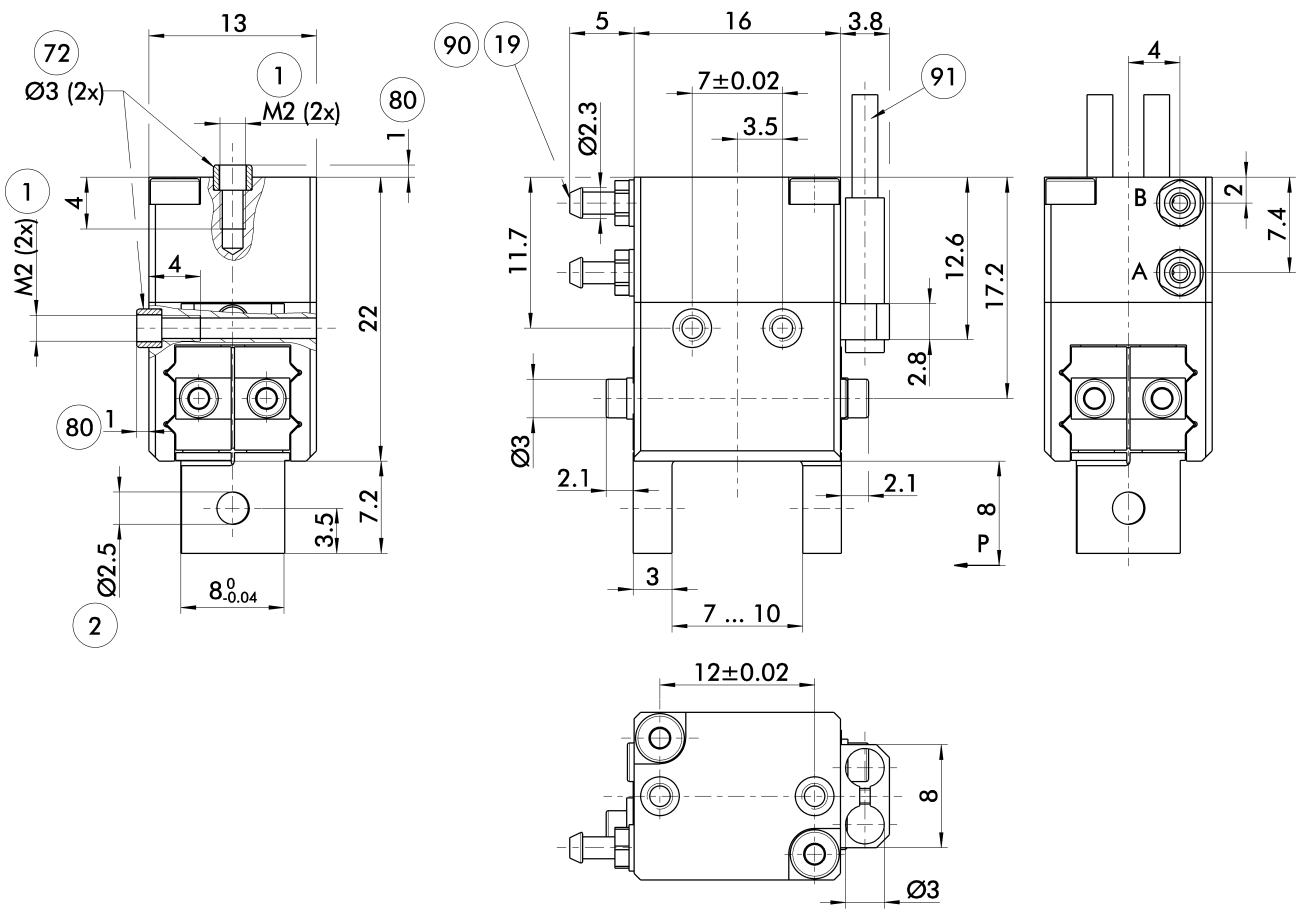

The drawing shows the basic version of the gripper with open jaws, without dimensional consideration of the options described below.

ⓘ The SDV-P pressure maintenance valve can also be used for I.D. or O.D. gripping alternatively or in addition to the spring-loaded, mechanical gripping force maintenance device (see catalog section on "Accessories").

A, a Main / direct connection, gripper opening

B, b Main / direct connection, gripper closing

(1) Gripper connection

(2) Finger connection

(19) Air connection

(72) Fit for centering sleeves

(80) Depth of the centering sleeve hole in the mating part

(90) Bosch-Rexroth compressed air hose, TU1-S (Ø 3.0 – 0.6) series, Order no.: 1820712066 (-67/-68/-69)

(91) IN ... sensor

Maximum permitted finger projection

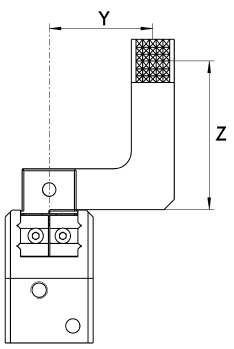

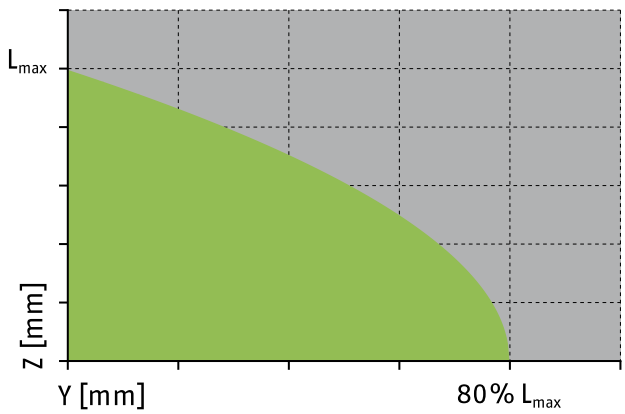

Permitted range

Inadmissible range

L_{max} is equivalent to the maximum permitted finger length, see the chart of technical specifications.

Gripping force maintenance device AS / IS

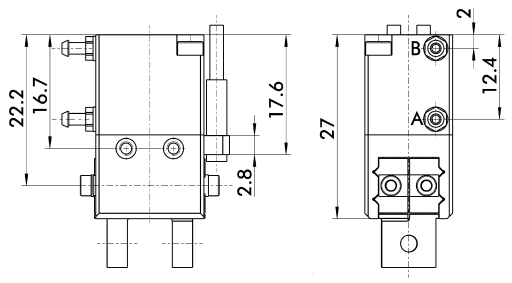

The mechanical maintenance of gripping force also assures a minimum gripping force in the case of a loss of pressure. With the AS / S variant, this acts as a closing force, and as an opening force for the IS variant. The maintenance of gripping force element can also be used as a means for increasing gripping force or for single actuated gripping.

Jaw design

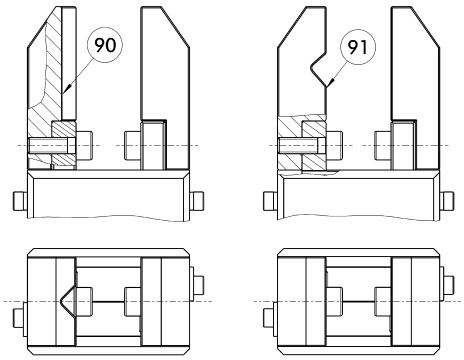

90 Vertical prism

91 Horizontal prism

A three-point support of the gripped workpiece is beneficial for gripping the workpiece with repeat accuracy and process reliability. More than three support points lead to a redundancy of the system. The drawing shows two alternative recommendations for the jaw design for coaxial and radial gripping of a cylindrical part.

SDV-P pressure maintenance valve

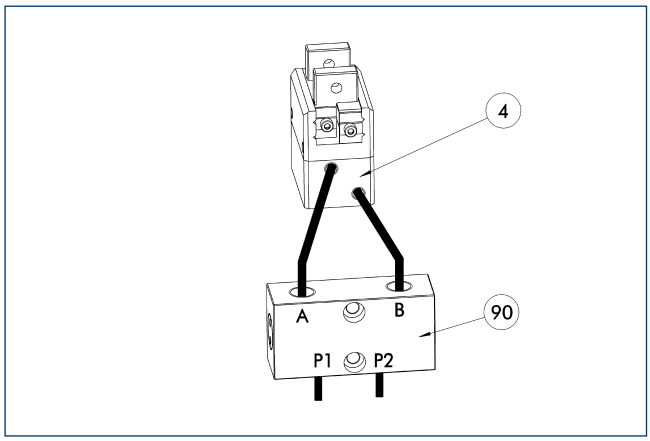

(4) Gripper
(90) SDV-P pressure maintenance valve

The SDV-P pressure maintenance valves ensure that the pressure in the piston chamber of pneumatic gripping, rotary, linear, and quick-change modules is maintained temporarily during an emergency stop.

Description	ID	
Pressure maintenance valve		
SDV-P 04	0403130	

IN 3 inductive proximity switches

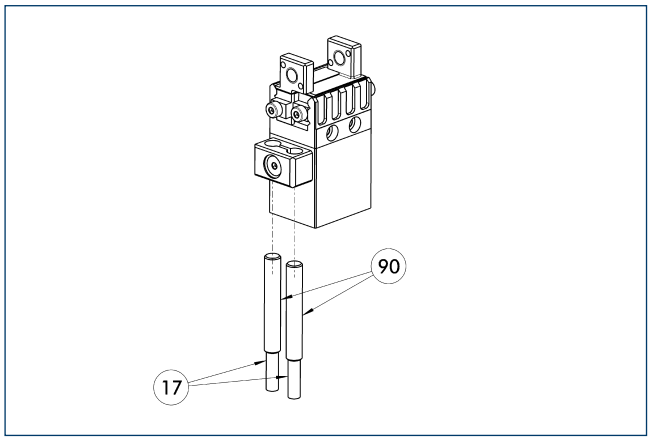

(17) Cable outlet
(90) IN ... sensor

Description	ID	Often combined
Inductive proximity switches		
IN 3-S-M8-PNP	0301466	●
Connection cables		
KA BG08-L 3P-0300-PNP	0301622	
KA BG08-L 3P-0500-PNP	0301623	
KA BW08-L 3P-0300-PNP	0301594	
KA BW08-L 3P-0500-PNP	0301502	
Cable extensions		
KV BW08-SG08 3P-0030-PNP	0301495	
KV BW08-SG08 3P-0100-PNP	0301496	
KV BW08-SG08 3P-0200-PNP	0301497	

ⓘ Two sensors (closer/S) are required for each unit, plus extension cables as an option. Please note the minimum permitted bending radii for the sensor cables, which are generally 35 mm.

Modular assembly automation

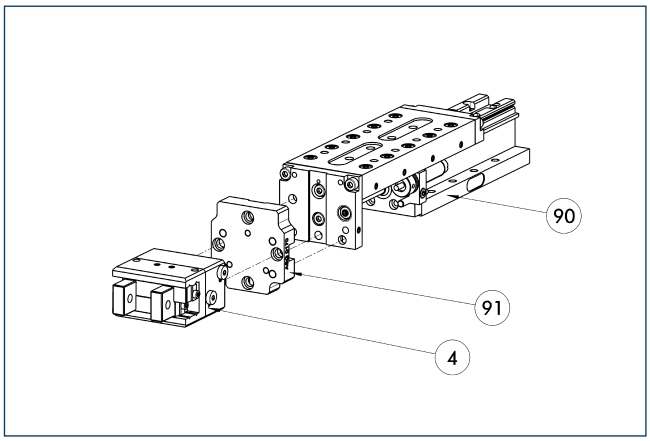

(4) Gripper
(91) ASG adapter plate
(90) CLM / KLM / LM / ELM / ELS / HLM linear module

Gripper and linear modules can be combined with standard adapters out of the modular assembly system. For more information see our catalog "Modular Assembly Automation".

MPG 20

SCHUNK Grippers pneumatic | 2-Finger Parallel Grippers | Miniature Parallel Gripper

Gripping force, O.D. gripping

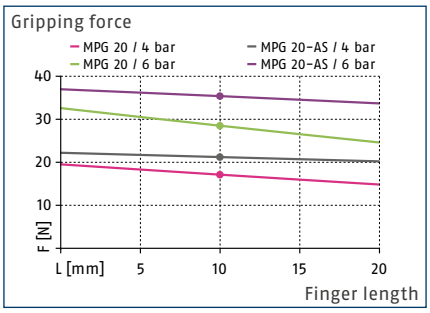

Gripping force, I.D. gripping

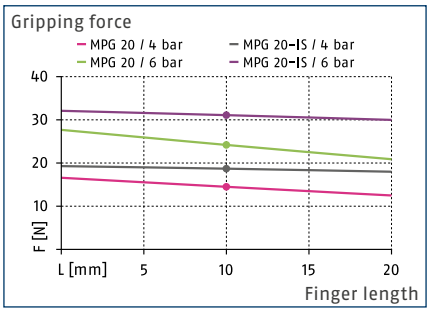

Finger load

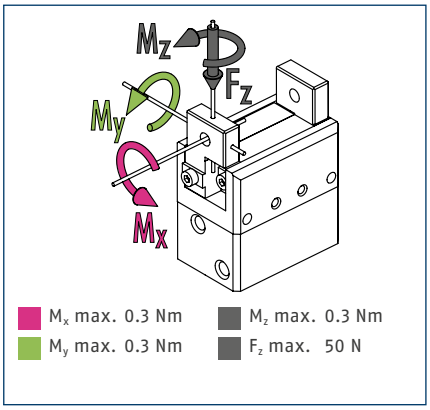

ⓘ The indicated moments and forces are static values, apply per base jaw and may occur simultaneously. M_y may arise in addition to the moment generated by the gripping force itself. If the max. permitted finger weight is exceeded, it is impreative to throttle the air supply so that the jaw movement occurs without any hitting or bouncing. Service life may be reduced.

Technical data

Description		MPG 20	MPG 20-AS	MPG 20-IS	MPG 20-FPS
ID		0340009	0340039	0340059	0340069
Stroke per jaw	[mm]	2	2	2	2
Closing- / opening force	[N]	28/24	36/-	-/31	28/24
min. spring force	[N]		8	7	
Weight	[kg]	0.04	0.05	0.05	0.05
Recommended workpiece weight	[kg]	0.14	0.14	0.14	0.14
Fluid consumption per double stroke	[cm³]	0.39	1.1	0.84	0.39
min. / max. operating pressure	[bar]	2/8	4/6.5	4/6.5	2/8
Nominal operating pressure	[bar]	6	6	6	6
Closing- / opening time	[s]	0.015/0.015	0.02/0.03	0.03/0.02	0.015/0.015
Closing- / opening time only with spring	[s]		0.10	0.10	
max. permitted finger length	[mm]	20	20	20	20
max. permitted weight per finger	[kg]	0.01	0.01	0.01	0.01
IP class		30	30	30	30
min. / max. ambient temperature	[°C]	5/90	5/90	5/90	5/90
Repeat accuracy	[mm]	0.02	0.02	0.02	0.02
Cleanroom class ISO 14644-1		5	5	5	5

Main view

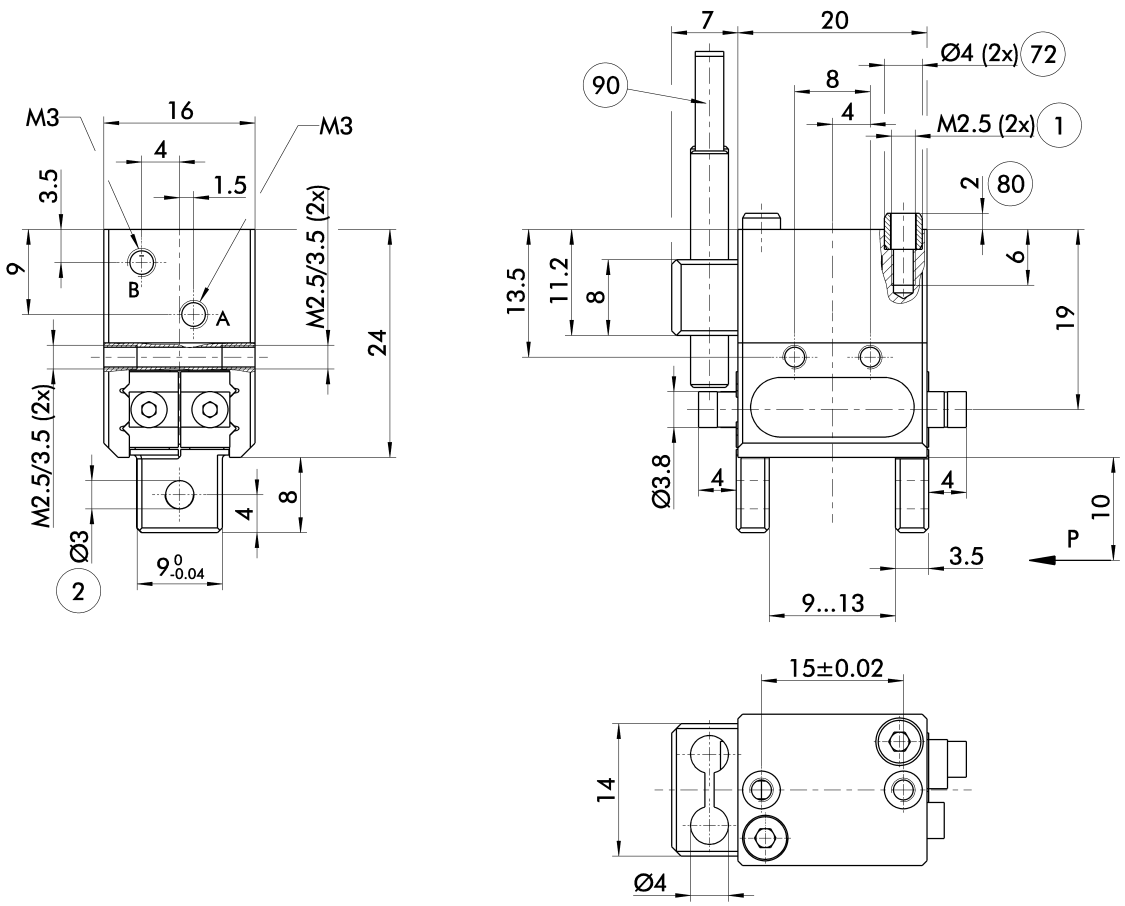

The drawing shows the gripper in the basic version with closed jaws, without dimensional consideration of the options described below.

ⓘ The SDV-P pressure maintenance valve can also be used for I.D. or O.D. gripping alternatively or in addition to the spring-loaded, mechanical gripping force maintenance device (see catalog section on "Accessories").

A, a Main / direct connection, gripper opening

B, b Main / direct connection, gripper closing

(1) Gripper connection

(2) Finger connection

(72) Fit for centering sleeves

(80) Depth of the centering sleeve hole in the mating part

(90) IN ... sensor

Maximum permitted finger projection

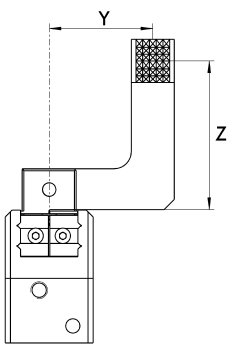

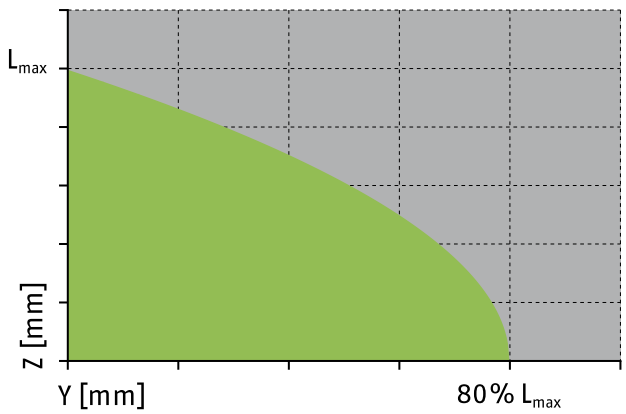

Permitted range

Inadmissible range

L_{max} is equivalent to the maximum permitted finger length, see the chart of technical specifications.

Gripping force maintenance device AS / IS

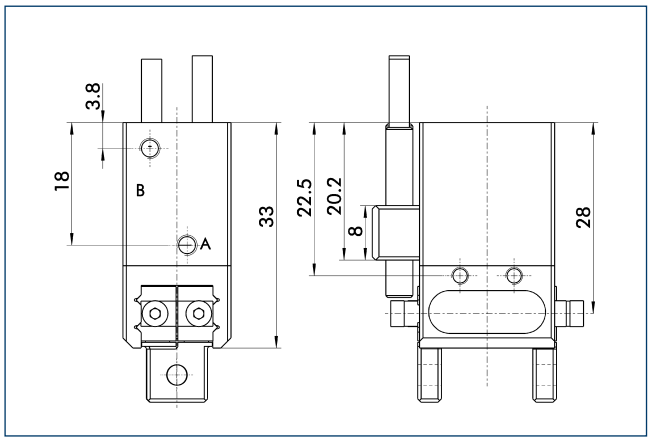

The mechanical maintenance of gripping force also assures a minimum gripping force in the case of a loss of pressure. With the AS / S variant, this acts as a closing force, and as an opening force for the IS variant. The maintenance of gripping force element can also be used as a means for increasing gripping force or for single actuated gripping.

Jaw design

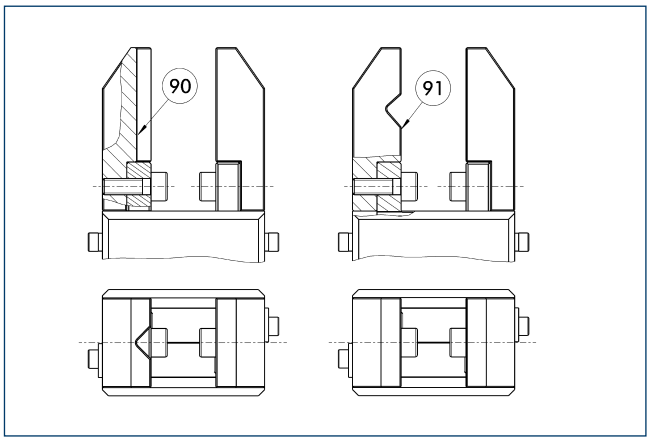

90 Vertical prism

91 Horizontal prism

A three-point support of the gripped workpiece is beneficial for gripping the workpiece with repeat accuracy and process reliability. More than three support points lead to a redundancy of the system. The drawing shows two alternative recommendations for the jaw design for coaxial and radial gripping of a cylindrical part.

Flexible position sensor

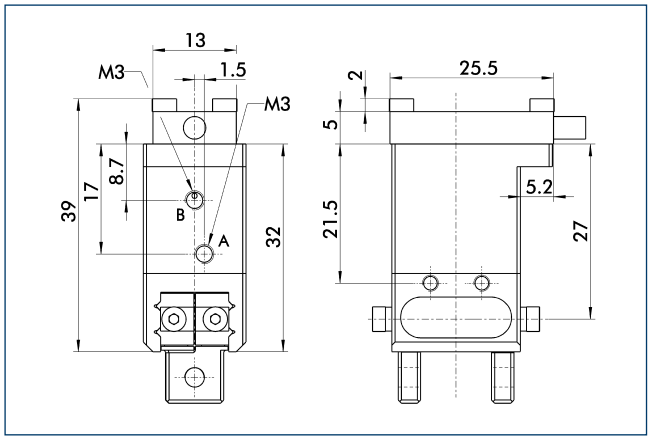

The following FPS position sensor can differentiate between five programmable areas and/or switching points for the stroke of a gripper, and can be used in combination with a PC as a measuring system.

SDV-P pressure maintenance valve

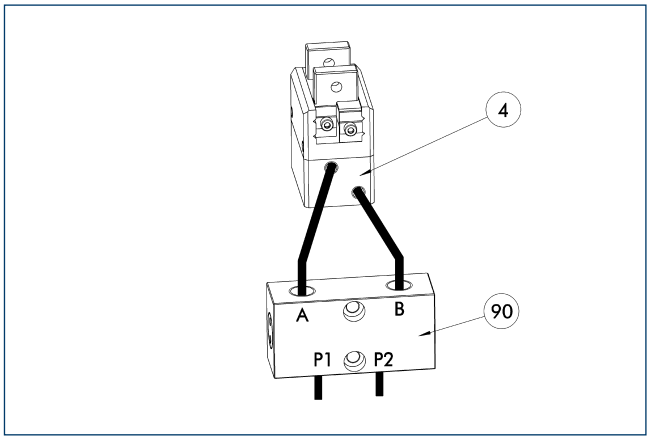

4 Gripper

90 SDV-P pressure maintenance valve

The SDV-P pressure maintenance valves ensure that the pressure in the piston chamber of pneumatic gripping, rotary, linear, and quick-change modules is maintained temporarily during an emergency stop.

Description	ID	
Pressure maintenance valve		
SDV-P 04	0403130	

ABR-MPG-plus 20 finger blanks

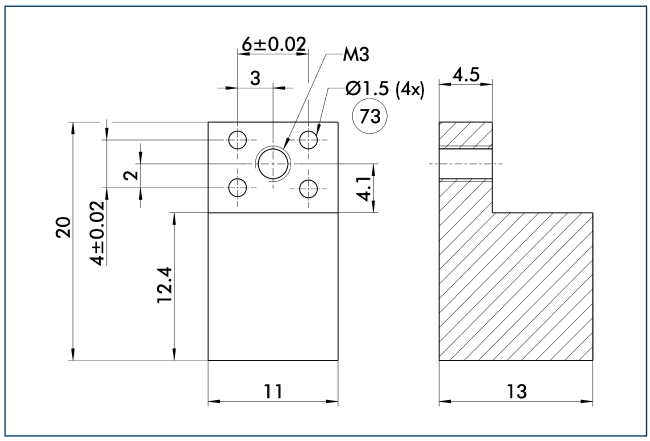

73 Fit for centering pins

Finger blanks for customized subsequent machining.

Description	ID	Material	Scope of delivery
Finger blanks			
ABR-MPG-plus 20	0340210	Aluminum	2

Attachment valves

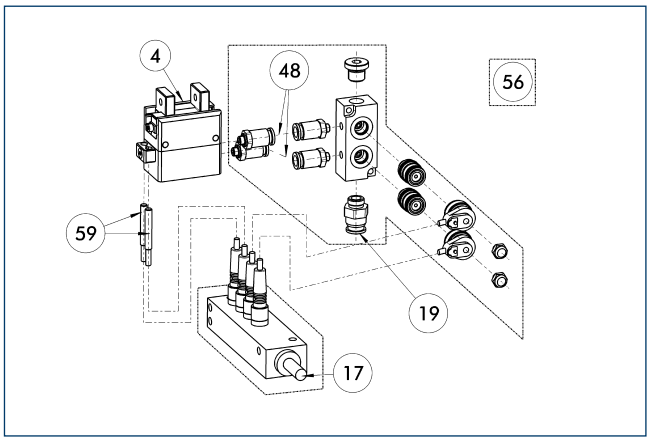

4 Gripper
17 Cable outlet
19 Air connection
48 Hose
56 Included in delivery
59 Monitoring gripping

For each unit one attachment valve ABV is required, optional with distributor for sensors and valves. Attachment valves increase the efficiency, reduce the installation work and air consumption and simplify air supply. For details please refer to the "Accessories" catalog section.

Description	ID	
Attachment valves		
ABV-MV15-S2-M5	0303375	
ABV-MV15-S2-M5-V2-M8	0303376	
ABV-MV15-S2-M5-V4-M8	0303377	
ABV-MV15-S2-M5-V8-M8	0303378	

Modular assembly automation

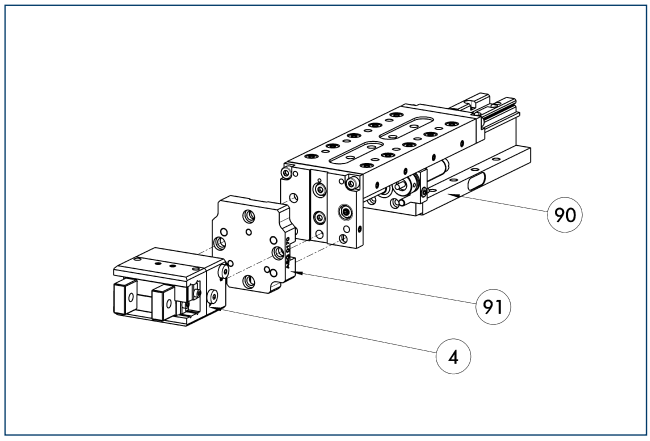

4 Gripper
90 CLM / KLM / LM / ELM / ELS / HLM linear module
91 ASG adapter plate

Gripper and linear modules can be combined with standard adapters out of the modular assembly system. For more information see our catalog "Modular Assembly Automation".

Inductive proximity switches

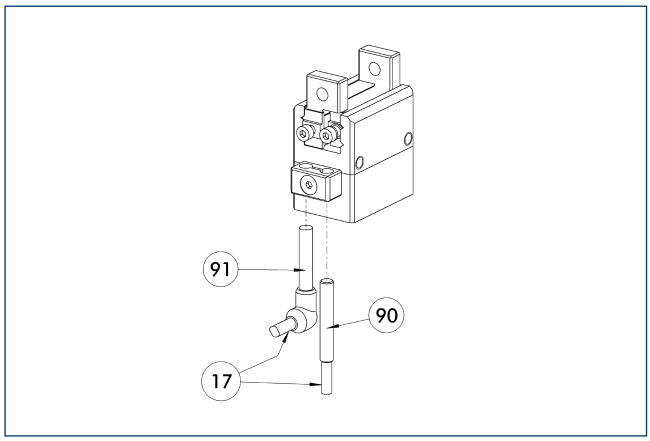

17 Cable outlet
91 IN ...-SA sensor
90 IN ... sensor

Directly mounted limit position monitor.

Description	ID	Often combined
Inductive proximity switches		
IN 40-S-M12	0301574	
IN 40-S-M8	0301474	●
INK 40-S	0301555	
Inductive proximity switches with lateral outlet		
IN 40-S-M12-SA	0301577	
IN 40-S-M8-SA	0301473	●
INK 40-S-SA	0301565	
Connection cables		
KA BG08-L 3P-0300-PNP	0301622	●
KA BG08-L 3P-0500-PNP	0301623	
KA BG12-L 3P-0500-PNP	30016369	
KA BW08-L 3P-0300-PNP	0301594	
KA BW08-L 3P-0500-PNP	0301502	
KA BW12-L 3P-0300-PNP	0301503	
KA BW12-L 3P-0500-PNP	0301507	
Clip for plug / socket		
CLI-M12	0301464	
CLI-M8	0301463	
Cable extensions		
KV BG12-SG12 3P-0030-PNP	0301999	
KV BG12-SG12 3P-0060-PNP	0301998	
KV BW08-SG08 3P-0030-PNP	0301495	
KV BW08-SG08 3P-0100-PNP	0301496	
KV BW08-SG08 3P-0200-PNP	0301497	●
KV BW12-SG12 3P-0030-PNP	0301595	
KV BW12-SG12 3P-0100-PNP	0301596	
KV BW12-SG12 3P-0200-PNP	0301597	
Sensor distributor		
V2-M12	0301776	●
V2-M8	0301775	●
V4-M12	0301747	
V4-M8	0301746	

ⓘ Two sensors (closer/S) are required for each unit, plus extension cables as an option. Please note the minimum permitted bending radii for the sensor cables, which are generally 35 mm.

Flexible position sensor

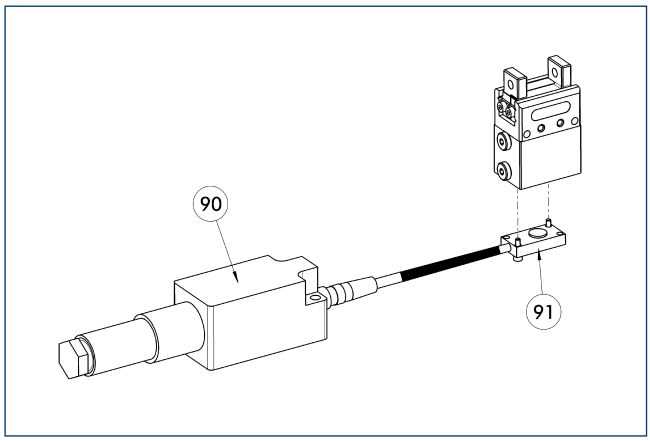

90 FPS-F5 / -F5 T electronic processor

91 FPS-S sensor

The FPS monitoring is only possible for this size in combination with the appropriate FPS variant of the gripper.

Description	ID	Often combined
Sensor		
FPS-S 13	0301705	
Electronic processor		
FPS-F5	0301805	●
FPS-F5 T	0301807	

ⓘ When using a FPS system, a FPS sensor (FPS-S) and a control unit (FPS-F5 / F5 T) are required for each gripper as well as a mounting kit (AS), if listed. Cable extensions (KV) are available as options in the "Accessories" catalog section.

MPG 25

SCHUNK Grippers pneumatic | 2-Finger Parallel Grippers | Miniature Parallel Gripper

Gripping force, O.D. gripping

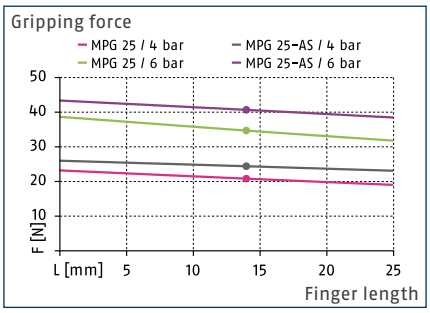

Gripping force, I.D. gripping

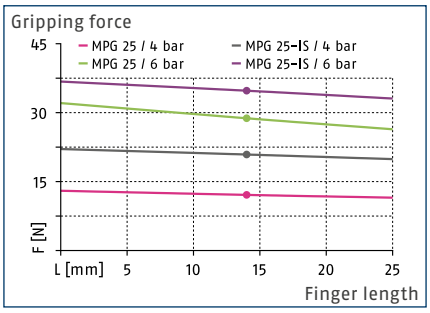

Finger load

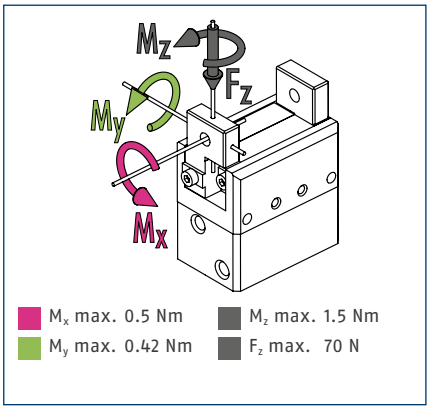

ⓘ The indicated moments and forces are static values, apply per base jaw and may occur simultaneously. M_y may arise in addition to the moment generated by the gripping force itself. If the max. permitted finger weight is exceeded, it is impreative to throttle the air supply so that the jaw movement occurs without any hitting or bouncing. Service life may be reduced.

Technical data

Description		MPG 25	MPG 25-AS	MPG 25-IS	MPG 25-FPS
ID		0340010	0340040	0340060	0340070
Stroke per jaw	[mm]	3	3	3	3
Closing- / opening force	[N]	31/28	41/-	-/37	31/28
min. spring force	[N]		10	9	
Weight	[kg]	0.06	0.08	0.08	0.07
Recommended workpiece weight	[kg]	0.16	0.16	0.16	0.16
Fluid consumption per double stroke	[cm³]	0.67	2.1	1.6	0.67
min. / max. operating pressure	[bar]	2/8	4/6.5	4/6.5	2/8
Nominal operating pressure	[bar]	6	6	6	6
Closing- / opening time	[s]	0.02/0.02	0.02/0.035	0.035/0.02	0.02/0.02
Closing- / opening time only with spring	[s]		0.10	0.10	
max. permitted finger length	[mm]	25	25	25	25
max. permitted weight per finger	[kg]	0.02	0.02	0.02	0.02
IP class		30	30	30	30
min. / max. ambient temperature	[°C]	5/90	5/90	5/90	5/90
Repeat accuracy	[mm]	0.02	0.02	0.02	0.02
Cleanroom class ISO 14644-1		5	5	5	5

Main view

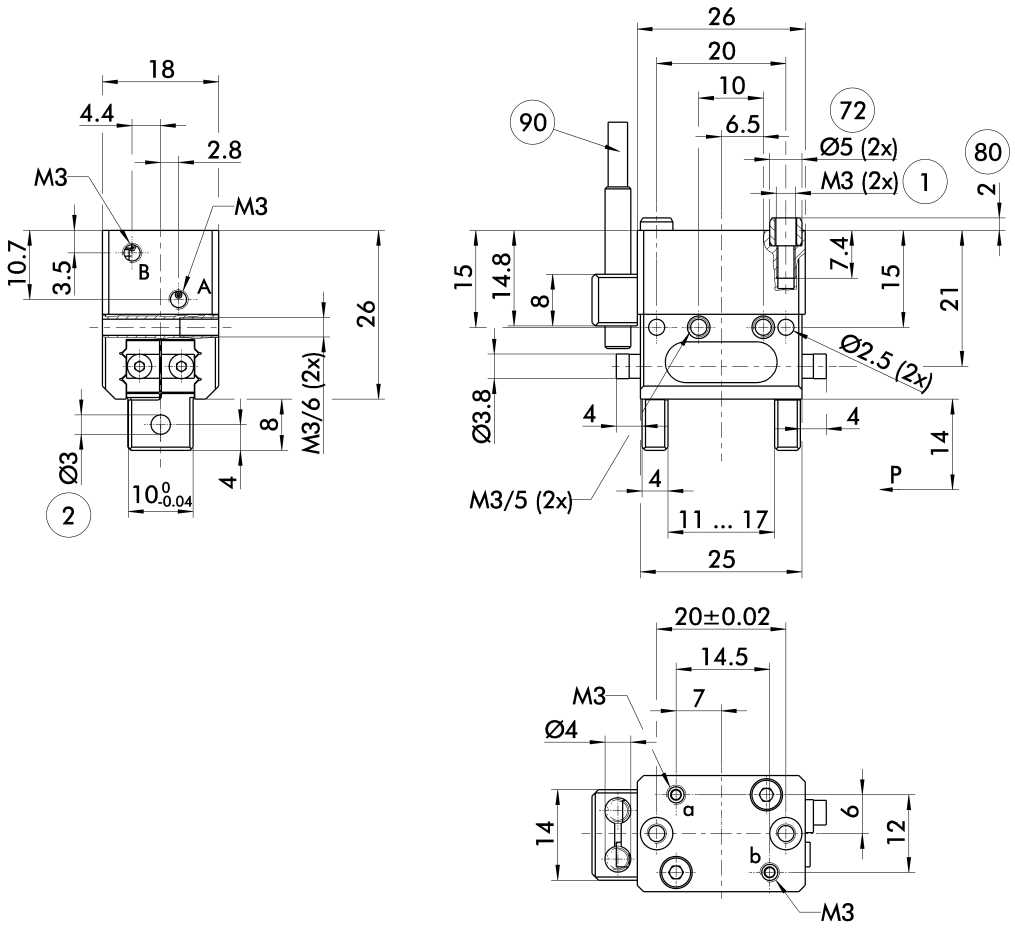

The drawing shows the basic version of the gripper with open jaws, without dimensional consideration of the options described below.

ⓘ The SDV-P pressure maintenance valve can also be used for I.D. or O.D. gripping alternatively or in addition to the spring-loaded, mechanical gripping force maintenance device (see catalog section on "Accessories").

A, a Main / direct connection, gripper opening

B, b Main / direct connection, gripper closing

(1) Gripper connection

(2) Finger connection

(72) Fit for centering sleeves

(80) Depth of the centering sleeve hole in the mating part

(90) IN ... sensor

Maximum permitted finger projection

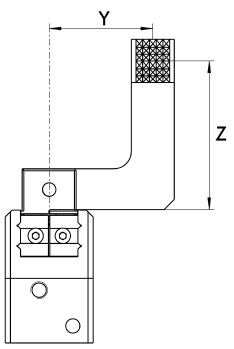

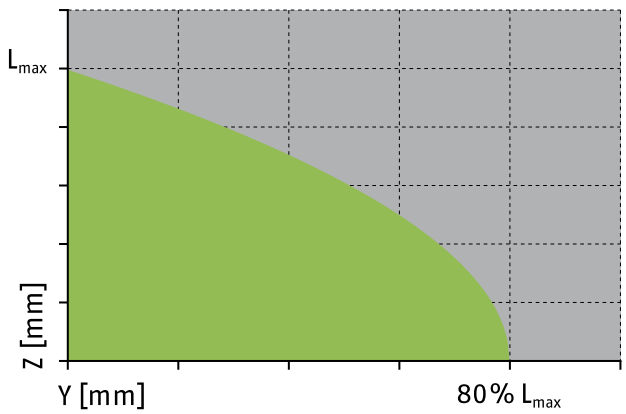

Permitted range

Inadmissible range

L_{max} is equivalent to the maximum permitted finger length, see the chart of technical specifications.

Hose-free direct connection M3

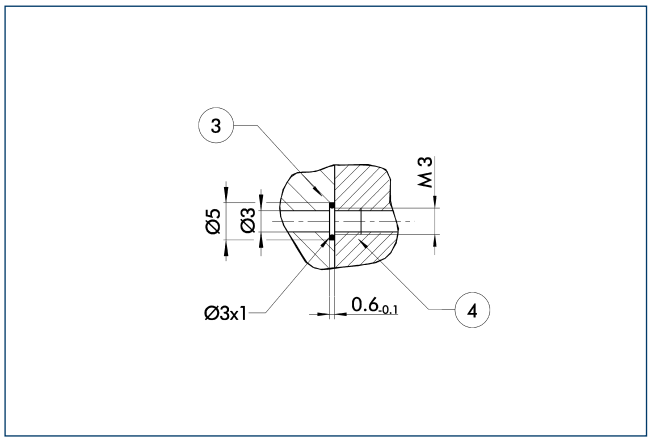

3 Adapter

4 Gripper

The direct connection is used for supplying compressed air without hoses. Instead, the pressure medium is fed through bore-holes in the mounting plate.

Gripping force maintenance device AS / IS

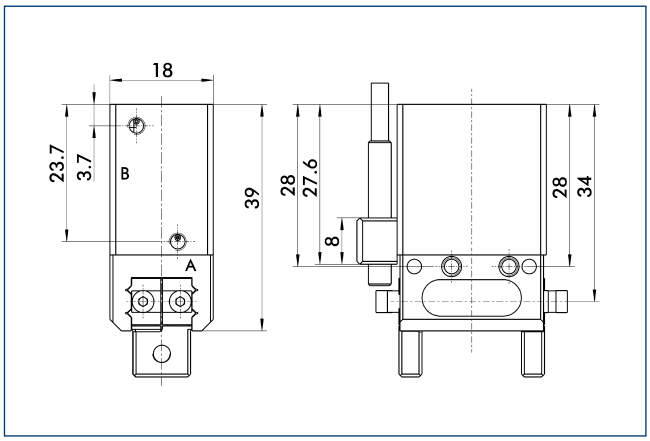

The mechanical maintenance of gripping force also assures a minimum gripping force in the case of a loss of pressure. With the AS / S variant, this acts as a closing force, and as an opening force for the IS variant. The maintenance of gripping force element can also be used as a means for increasing gripping force or for single actuated gripping.

Jaw design

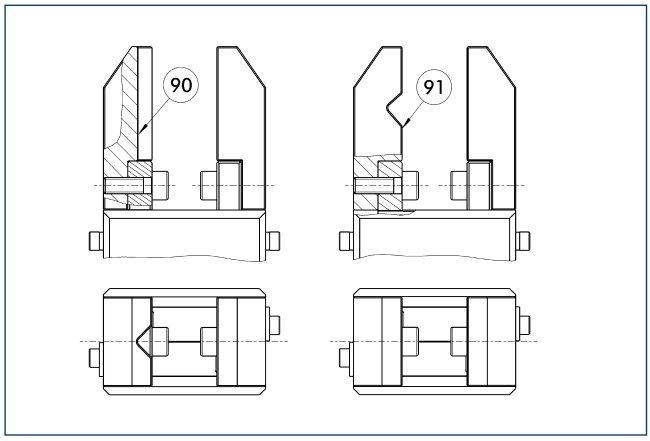

90 Vertical prism

91 Horizontal prism

A three-point support of the gripped workpiece is beneficial for gripping the workpiece with repeat accuracy and process reliability. More than three support points lead to a redundancy of the system. The drawing shows two alternative recommendations for the jaw design for coaxial and radial gripping of a cylindrical part.

Flexible position sensor

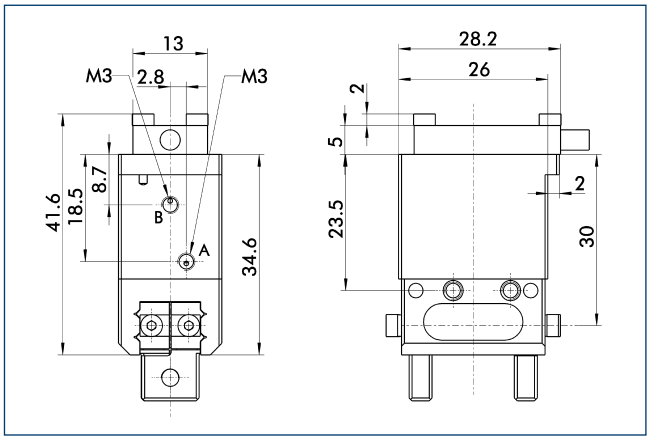

The following FPS position sensor can differentiate between five programmable areas and/or switching points for the stroke of a gripper, and can be used in combination with a PC as a measuring system.

SDV-P pressure maintenance valve

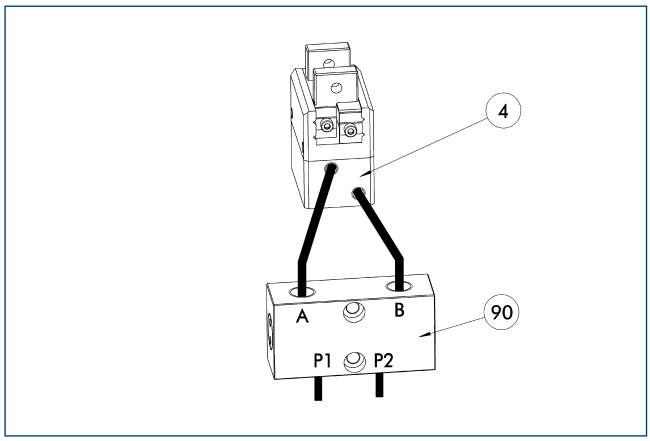

(4) Gripper
(90) SDV-P pressure maintenance valve

The SDV-P pressure maintenance valves ensure that the pressure in the piston chamber of pneumatic gripping, rotary, linear, and quick-change modules is maintained temporarily during an emergency stop.

Description	ID	
Pressure maintenance valve		
SDV-P 04	0403130	

ABR-MPG-plus 25 finger blanks

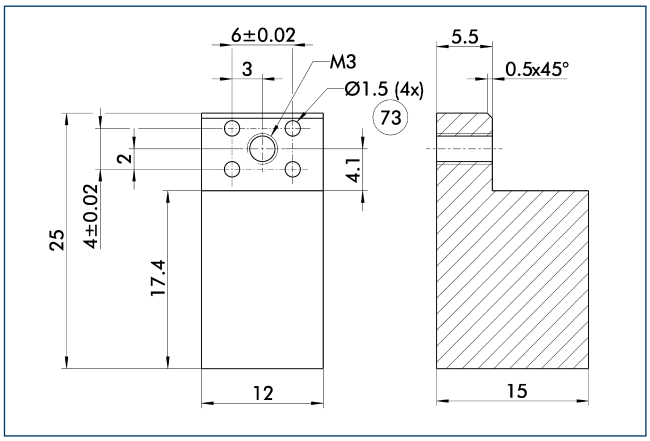

(73) Fit for centering pins

Finger blanks for customized subsequent machining.

Description	ID	Material	Scope of delivery
Finger blanks			
ABR-MPG-plus 25	0340211	Aluminum	2

OAS-MPG-plus 25 object distance sensor

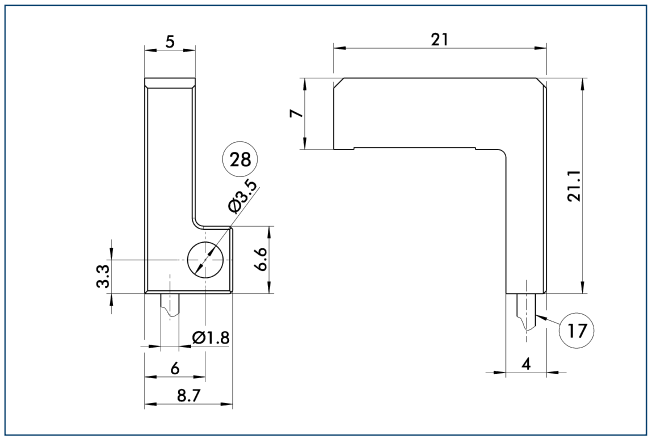

(17) Cable outlet
(28) Through-bore

Description	ID	
Object distance sensor		
OAS-MPG-plus 25	0308891	

Object distance sensor

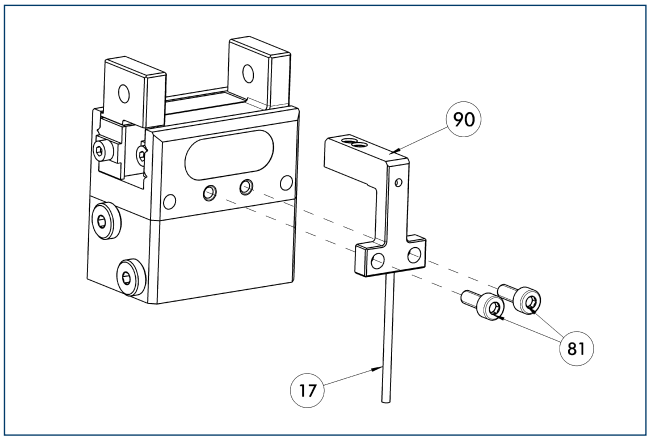

(17) Cable outlet
(90) OAS
(81) Not included in the scope of delivery

Optical distance and presence sensor for direct mounting on the gripper. One OAS sensor per gripper can be assembled.

Description	ID	
Object distance sensor		
OAS-MPG-plus 25	0308891	
Electronic processor		
OAS-V09-D	0308865	
OAS-V10-A	0308867	
OAS-V10-D	0308866	

ⓘ The evaluation of the OAS can be done with either an analog or digital evaluation unit and with or without a display. The states which should be detected can be simply taught.

Attachment valves

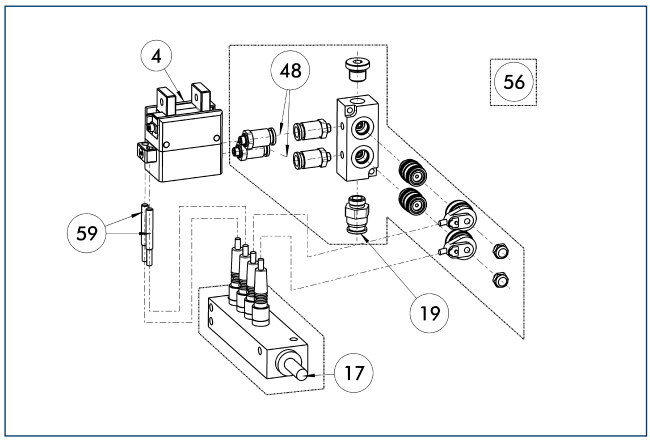

(4) Gripper
(48) Hose
(17) Cable outlet
(56) Included in delivery
(19) Air connection
(59) Monitoring gripping

For each unit one attachment valve ABV is required, optional with distributor for sensors and valves. Attachment valves increase the efficiency, reduce the installation work and air consumption and simplify air supply. For details please refer to the "Accessories" catalog section.

Description	ID	
Attachment valves		
ABV-MV15-S2-M5	0303375	
ABV-MV15-S2-M5-V2-M8	0303376	
ABV-MV15-S2-M5-V4-M8	0303377	
ABV-MV15-S2-M5-V8-M8	0303378	

Modular assembly automation

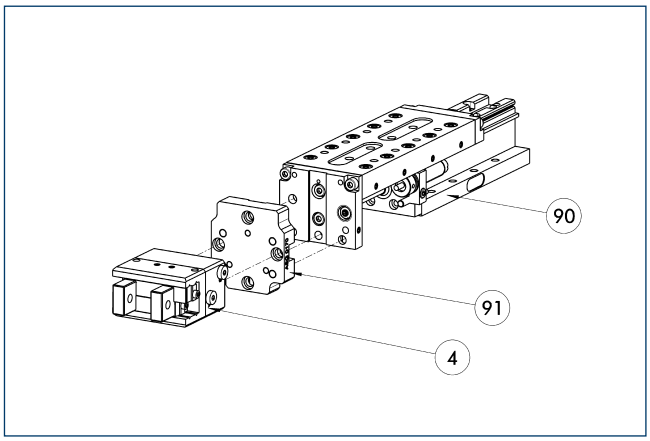

(4) Gripper
(91) ASG adapter plate
(90) CLM / KLM / LM / ELM / ELS / HLM linear module

Gripper and linear modules can be combined with standard adapters out of the modular assembly system. For more information see our catalog "Modular Assembly Automation".

Mounting kit for proximity switch

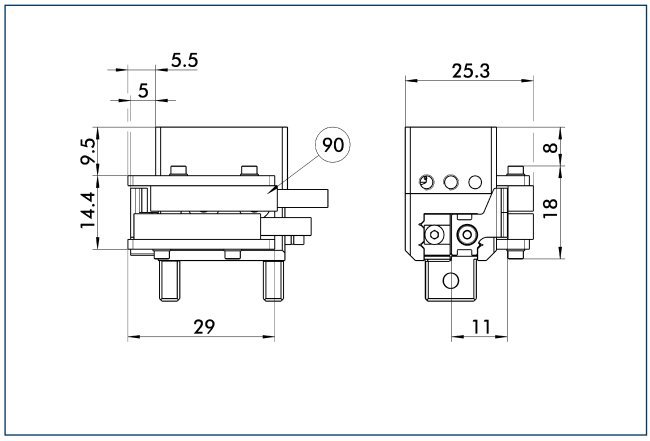

(90) IN ... sensor

The mounting kit comprises mount, switching lug / cam and mounting screws. Proximity switches must be ordered separately.

Description	ID	
Mounting kit for proximity switch		
AS-IN5-MPG-plus 25	0340150	

ⓘ This mounting kit needs to be ordered optionally as an accessory.

Inductive proximity switches

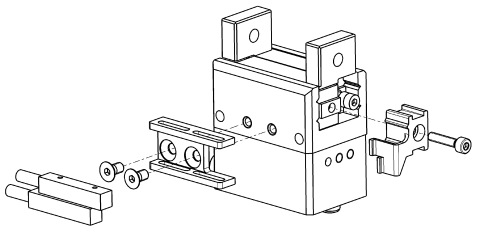

Limit position monitor can be mounted with mounting kit.

Description	ID	Often combined
Mounting kit for proximity switch		
AS-IN5-MPG-plus 25	0340150	
Inductive proximity switches		
IN 5-S-M12	0301569	
IN 5-S-M8	0301469	●
Cable extensions		
KV BG12-SG12 3P-0030-PNP	0301999	
KV BG12-SG12 3P-0060-PNP	0301998	
KV BW08-SG08 3P-0030-PNP	0301495	
KV BW08-SG08 3P-0100-PNP	0301496	
KV BW08-SG08 3P-0200-PNP	0301497	●
KV BW12-SG12 3P-0030-PNP	0301595	
KV BW12-SG12 3P-0100-PNP	0301596	
KV BW12-SG12 3P-0200-PNP	0301597	
Clip for plug / socket		
CLI-M12	0301464	
CLI-M8	0301463	
Connection cables		
KA BG08-L 3P-0300-PNP	0301622	●
KA BG08-L 3P-0500-PNP	0301623	
KA BG12-L 3P-0500-PNP	30016369	
KA BW08-L 3P-0300-PNP	0301594	
KA BW08-L 3P-0500-PNP	0301502	
KA BW12-L 3P-0300-PNP	0301503	
KA BW12-L 3P-0500-PNP	0301507	
Sensor distributor		
V2-M8	0301775	●
V2-M12	0301776	●
V4-M12	0301747	
V4-M8	0301746	
V8-M12	0301752	
V8-M8	0301751	

ⓘ Two sensors (closer/S) are required for each unit, plus extension cables as an option. This mounting kit needs to be ordered optionally as an accessory. Please note the minimum permitted bending radii for the sensor cables, which are generally 35 mm.

Inductive proximity switches

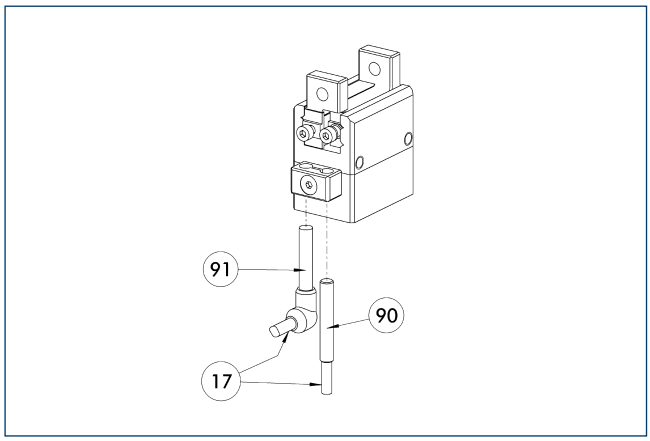

(17) Cable outlet
(91) IN ...-SA sensor
(90) IN ... sensor

Directly mounted limit position monitor.

Description	ID	Often combined
Inductive proximity switches		
IN 40-S-M12	0301574	
IN 40-S-M8	0301474	●
INK 40-S	0301555	
Inductive proximity switches with lateral outlet		
IN 40-S-M12-SA	0301577	
IN 40-S-M8-SA	0301473	●
INK 40-S-SA	0301565	
Connection cables		
KA BG08-L 3P-0300-PNP	0301622	●
KA BG08-L 3P-0500-PNP	0301623	
KA BG12-L 3P-0500-PNP	30016369	
KA BW08-L 3P-0300-PNP	0301594	
KA BW08-L 3P-0500-PNP	0301502	
KA BW12-L 3P-0300-PNP	0301503	
KA BW12-L 3P-0500-PNP	0301507	
Clip for plug / socket		
CLI-M12	0301464	
CLI-M8	0301463	
Cable extensions		
KV BG12-SG12 3P-0030-PNP	0301999	
KV BG12-SG12 3P-0060-PNP	0301998	
KV BW08-SG08 3P-0030-PNP	0301495	
KV BW08-SG08 3P-0100-PNP	0301496	
KV BW08-SG08 3P-0200-PNP	0301497	●
KV BW12-SG12 3P-0030-PNP	0301595	
KV BW12-SG12 3P-0100-PNP	0301596	
KV BW12-SG12 3P-0200-PNP	0301597	
Sensor distributor		
V2-M12	0301776	●
V2-M8	0301775	●
V4-M12	0301747	
V4-M8	0301746	

ⓘ Two sensors (closer/S) are required for each unit, plus extension cables as an option. Please note the minimum permitted bending radii for the sensor cables, which are generally 35 mm.

Flexible position sensor

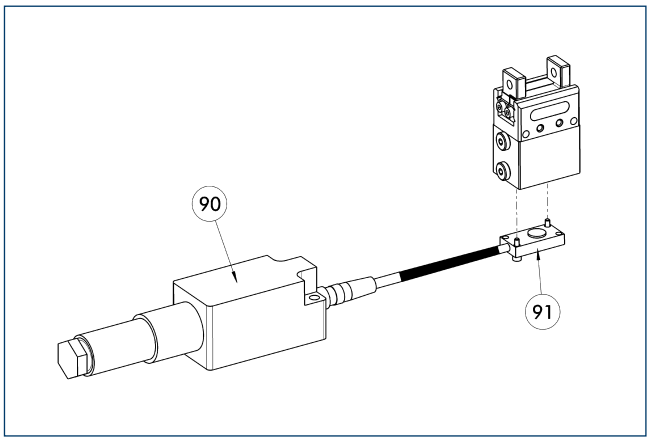

(90) FPS-F5 / -F5 T electronic processor
(91) FPS-S sensor

The FPS monitoring is only possible for this size in combination with the appropriate FPS variant of the gripper.

Description	ID	Often combined
Sensor		
FPS-S 13	0301705	
Electronic processor		
FPS-F5	0301805	●
FPS-F5 T	0301807	

ⓘ When using a FPS system, a FPS sensor (FPS-S) and a control unit (FPS-F5 / F5 T) are required for each gripper as well as a mounting kit (AS), if listed. Cable extensions (KV) are available as options in the "Accessories" catalog section.

MPG 32

SCHUNK Grippers pneumatic | 2-Finger Parallel Grippers | Miniature Parallel Gripper

Gripping force, O.D. gripping

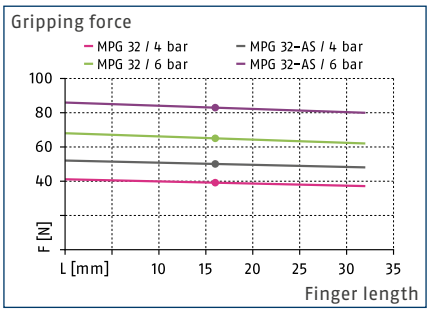

Gripping force, I.D. gripping

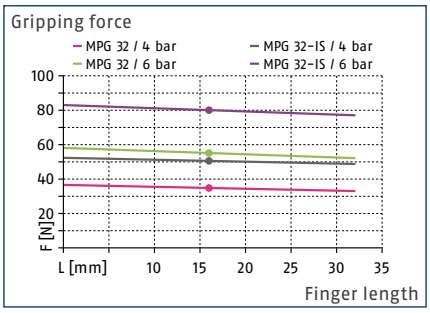

Finger load

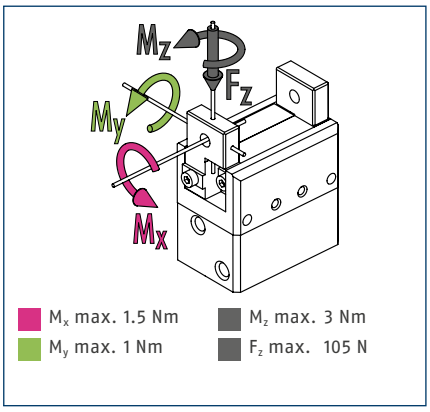

ⓘ The indicated moments and forces are static values, apply per base jaw and may occur simultaneously. M_y may arise in addition to the moment generated by the gripping force itself. If the max. permitted finger weight is exceeded, it is impreative to throttle the air supply so that the jaw movement occurs without any hitting or bouncing. Service life may be reduced.

Technical data

Description		MPG 32	MPG 32-AS	MPG 32-IS	MPG 32-FPS
ID		0340011	0340041	0340061	0340071
Stroke per jaw	[mm]	4	4	4	4
Closing- / opening force	[N]	65/55	85/-	-/80	65/55
min. spring force	[N]		20	25	
Weight	[kg]	0.12	0.14	0.14	0.14
Recommended workpiece weight	[kg]	0.33	0.33	0.33	0.33
Fluid consumption per double stroke	[cm³]	1.6	4	3.4	1.6
min. / max. operating pressure	[bar]	2/8	4/6.5	4/6.5	2/8
Nominal operating pressure	[bar]	6	6	6	6
Closing- / opening time	[s]	0.025/0.025	0.035/0.05	0.05/0.035	0.025/0.025
Closing- / opening time only with spring	[s]		0.20	0.20	
max. permitted finger length	[mm]	32	32	32	32
max. permitted weight per finger	[kg]	0.04	0.04	0.04	0.04
IP class		30	30	30	30
min. / max. ambient temperature	[°C]	5/90	5/90	5/90	5/90
Repeat accuracy	[mm]	0.02	0.02	0.02	0.02
Cleanroom class ISO 14644-1		5	5	5	5

Main view

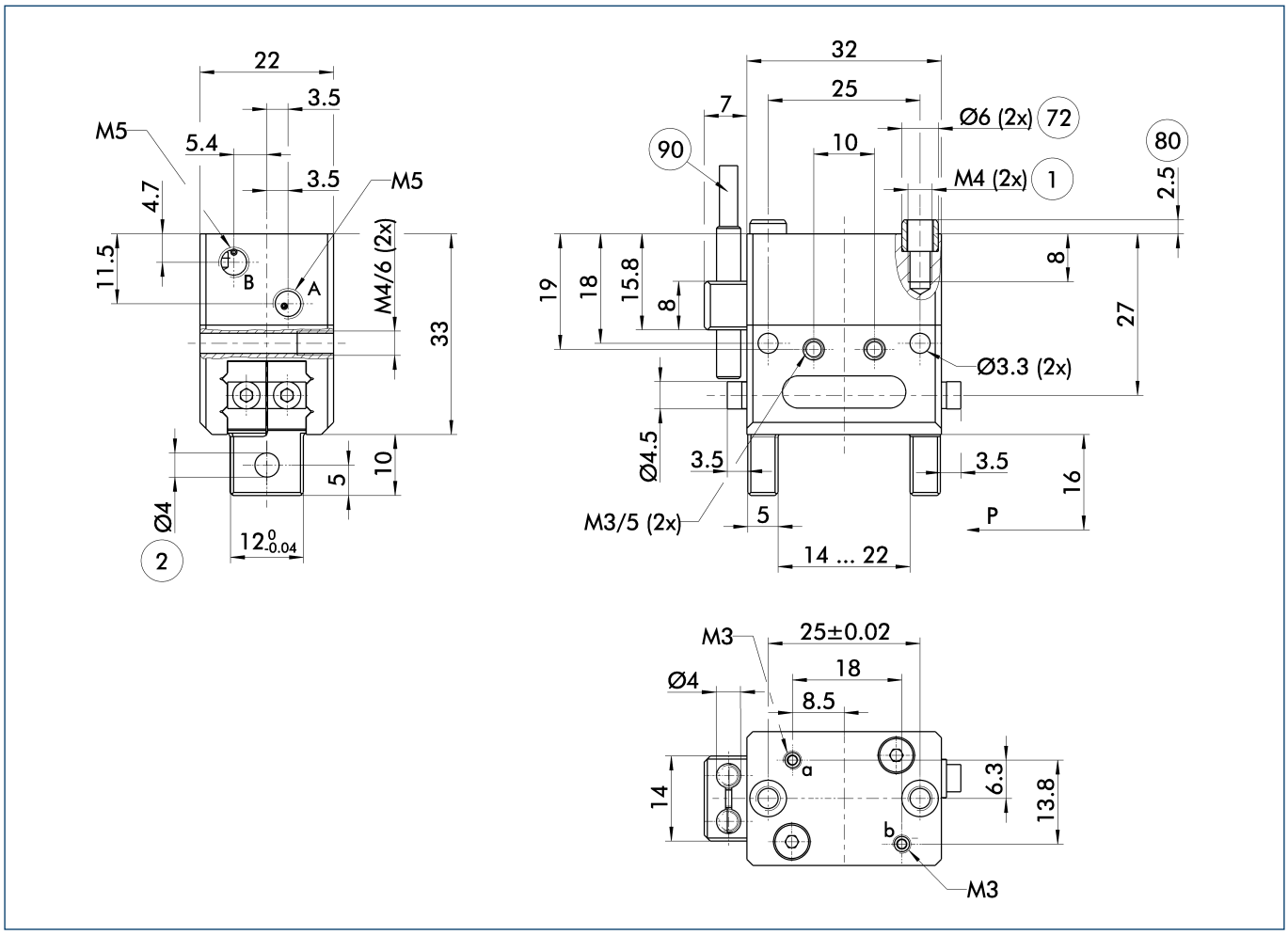

The drawing shows the basic version of the gripper with open jaws, without dimensional consideration of the options described below.

ⓘ The SDV-P pressure maintenance valve can also be used for I.D. or O.D. gripping alternatively or in addition to the spring-loaded, mechanical gripping force maintenance device (see catalog section on "Accessories").

A, a Main / direct connection, gripper opening

B, b Main / direct connection, gripper closing

(1) Gripper connection

(2) Finger connection

(72) Fit for centering sleeves

(80) Depth of the centering sleeve hole in the mating part

(90) IN ... sensor

Maximum permitted finger projection

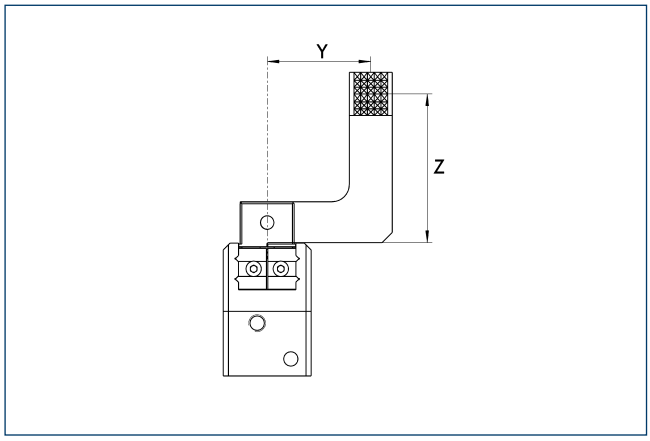

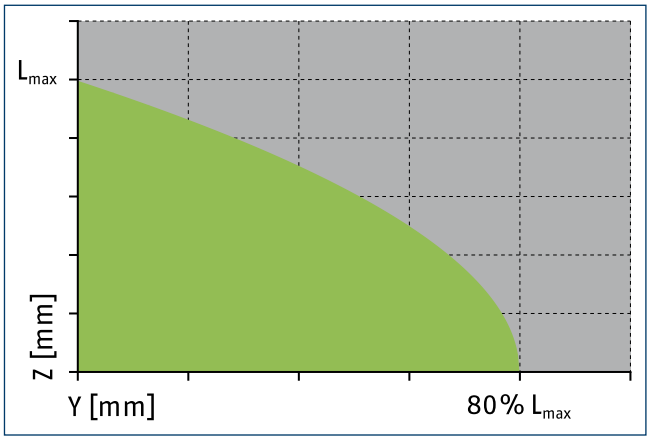

Permitted range

Inadmissible range

L_{max} is equivalent to the maximum permitted finger length, see the chart of technical specifications.

Hose-free direct connection M3

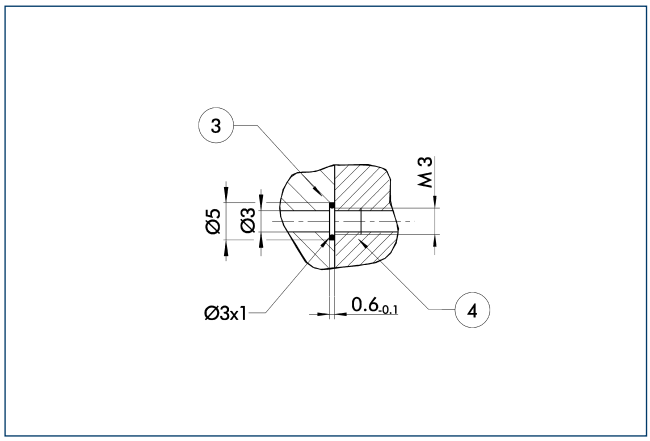

3 Adapter 4 Gripper

The direct connection is used for supplying compressed air without hoses. Instead, the pressure medium is fed through bore-holes in the mounting plate.

Gripping force maintenance device AS / IS

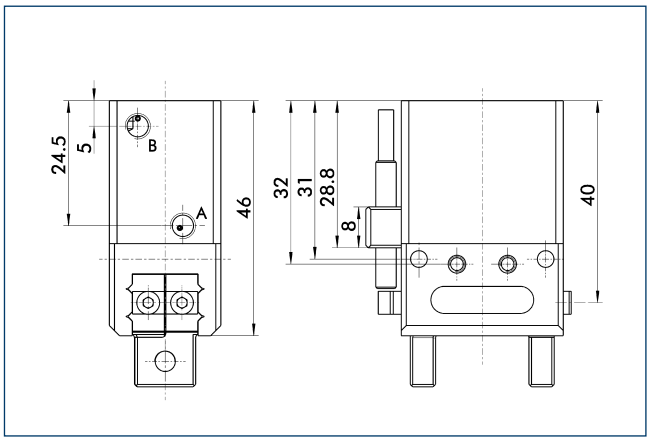

The mechanical maintenance of gripping force also assures a minimum gripping force in the case of a loss of pressure. With the AS / S variant, this acts as a closing force, and as an opening force for the IS variant. The maintenance of gripping force element can also be used as a means for increasing gripping force or for single actuated gripping.

Jaw design

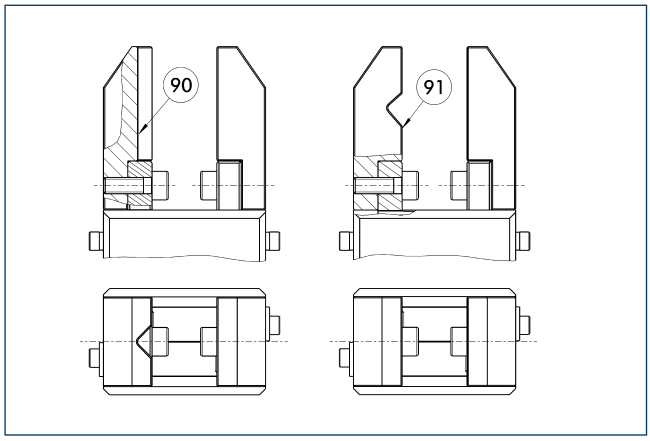

90 Vertical prism 91 Horizontal prism

A three-point support of the gripped workpiece is beneficial for gripping the workpiece with repeat accuracy and process reliability. More than three support points lead to a redundancy of the system. The drawing shows two alternative recommendations for the jaw design for coaxial and radial gripping of a cylindrical part.

Flexible position sensor

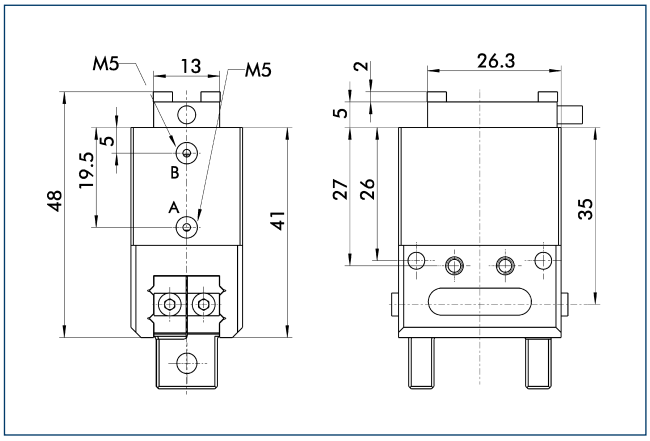

The following FPS position sensor can differentiate between five programmable areas and/or switching points for the stroke of a gripper, and can be used in combination with a PC as a measuring system.

SDV-P pressure maintenance valve

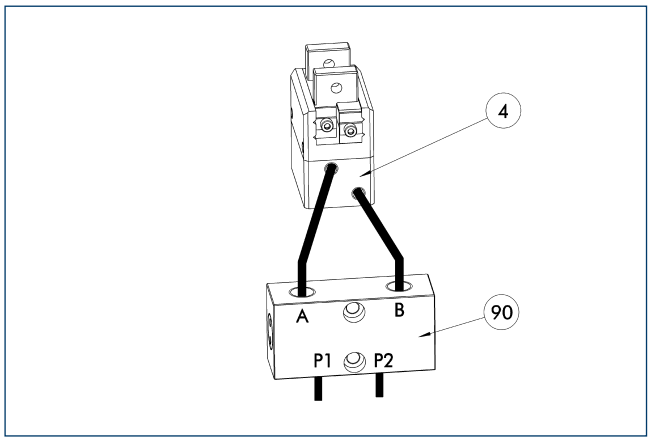

(4) Gripper
(90) SDV-P pressure maintenance valve

The SDV-P pressure maintenance valves ensure that the pressure in the piston chamber of pneumatic gripping, rotary, linear, and quick-change modules is maintained temporarily during an emergency stop.

Description	ID	
Pressure maintenance valve		
SDV-P 04	0403130	

ABR-MPG-plus 32 finger blanks

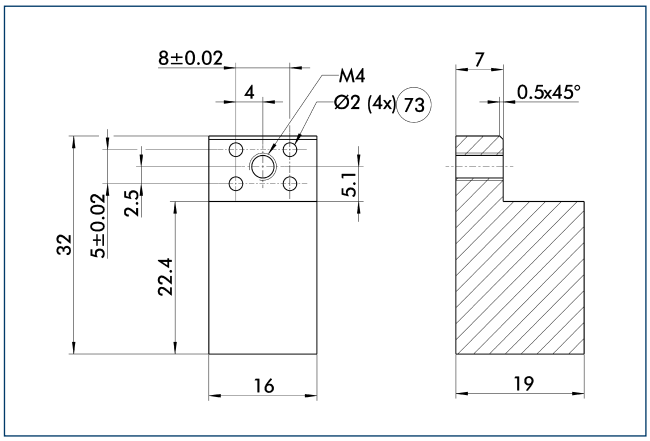

(73) Fit for centering pins

Finger blanks for customized subsequent machining.

Description	ID	Material	Scope of delivery
Finger blanks			
ABR-MPG-plus 32	0340212	Aluminum	2

OAS-MPG-plus 32 object distance sensor

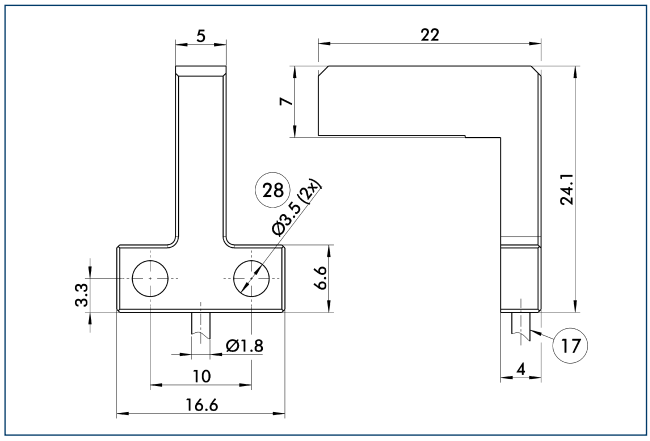

(17) Cable outlet
(28) Through-bore

Description	ID	
Object distance sensor		
OAS-MPG-plus 32	0308892	

Object distance sensor

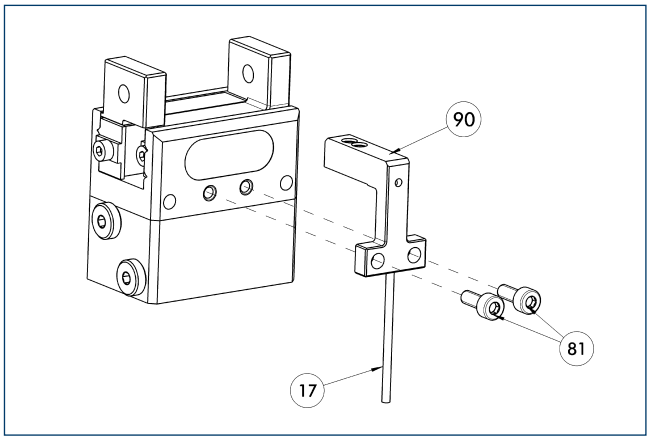

(17) Cable outlet
(90) OAS
(81) Not included in the scope of delivery

Optical distance and presence sensor for direct mounting on the gripper. One OAS sensor per gripper can be assembled.

Description	ID	
Object distance sensor		
OAS-MPG-plus 32	0308892	
Electronic processor		
OAS-V09-D	0308865	
OAS-V10-A	0308867	
OAS-V10-D	0308866	

ⓘ The evaluation of the OAS can be done with either an analog or digital evaluation unit and with or without a display. The states which should be detected can be simply taught.

Attachment valves

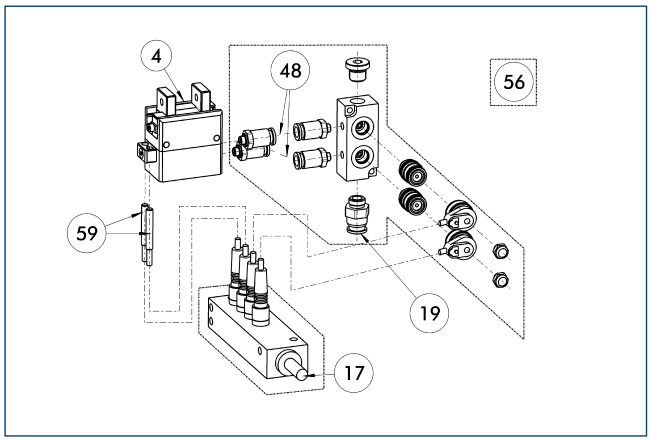

(4) Gripper
(48) Hose
(17) Cable outlet
(56) Included in delivery
(19) Air connection
(59) Monitoring gripping

For each unit one attachment valve ABV is required, optional with distributor for sensors and valves. Attachment valves increase the efficiency, reduce the installation work and air consumption and simplify air supply. For details please refer to the "Accessories" catalog section.

Description	ID	
Attachment valves		
ABV-MV15-S2-M5	0303375	
ABV-MV15-S2-M5-V2-M8	0303376	
ABV-MV15-S2-M5-V4-M8	0303377	
ABV-MV15-S2-M5-V8-M8	0303378	

Modular assembly automation

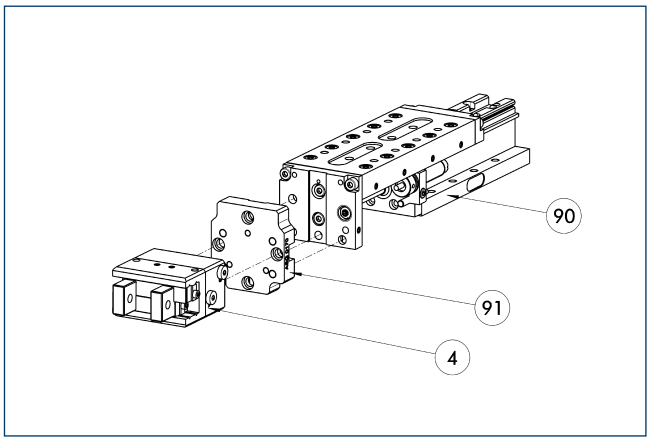

(4) Gripper
(91) ASG adapter plate
(90) CLM / KLM / LM / ELM / ELS / HLM linear module

Gripper and linear modules can be combined with standard adapters out of the modular assembly system. For more information see our catalog "Modular Assembly Automation".

Mounting kit for proximity switch

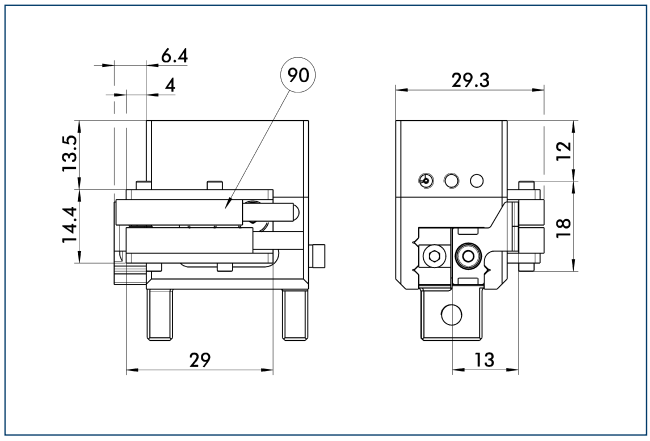

(90) IN ... sensor

The mounting kit comprises mount, switching lug / cam and mounting screws. Proximity switches must be ordered separately.

Description	ID	
Mounting kit for proximity switch		
AS-IN5-MPG-plus 32	0340151	

ⓘ This mounting kit needs to be ordered optionally as an accessory.

Inductive proximity switches

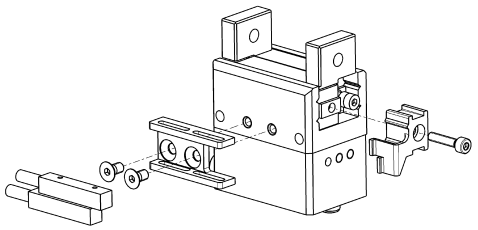

Limit position monitor can be mounted with mounting kit.

Description	ID	Often combined
Mounting kit for proximity switch		
AS-IN5-MPG-plus 32	0340151	
Inductive proximity switches		
IN 5-S-M12	0301569	
IN 5-S-M8	0301469	●
Cable extensions		
KV BG12-SG12 3P-0030-PNP	0301999	
KV BG12-SG12 3P-0060-PNP	0301998	
KV BW08-SG08 3P-0030-PNP	0301495	
KV BW08-SG08 3P-0100-PNP	0301496	
KV BW08-SG08 3P-0200-PNP	0301497	●
KV BW12-SG12 3P-0030-PNP	0301595	
KV BW12-SG12 3P-0100-PNP	0301596	
KV BW12-SG12 3P-0200-PNP	0301597	
Clip for plug / socket		
CLI-M12	0301464	
CLI-M8	0301463	
Connection cables		
KA BG08-L 3P-0300-PNP	0301622	●
KA BG08-L 3P-0500-PNP	0301623	
KA BG12-L 3P-0500-PNP	30016369	
KA BW08-L 3P-0300-PNP	0301594	
KA BW08-L 3P-0500-PNP	0301502	
KA BW12-L 3P-0300-PNP	0301503	
KA BW12-L 3P-0500-PNP	0301507	
Sensor distributor		
V2-M8	0301775	●
V2-M12	0301776	●
V4-M12	0301747	
V4-M8	0301746	
V8-M12	0301752	
V8-M8	0301751	

ⓘ Two sensors (closer/S) are required for each unit, plus extension cables as an option. This mounting kit needs to be ordered optionally as an accessory. Please note the minimum permitted bending radii for the sensor cables, which are generally 35 mm.

Inductive proximity switches

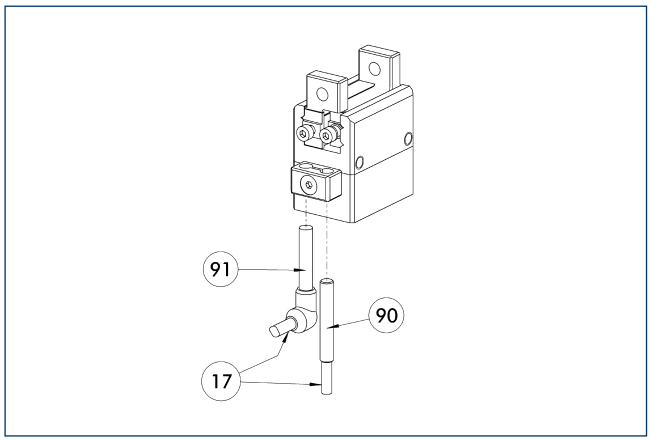

(17) Cable outlet
(91) IN ...-SA sensor
(90) IN ... sensor

Directly mounted limit position monitor.

Description	ID	Often combined
Inductive proximity switches		
IN 40-S-M12	0301574	
IN 40-S-M8	0301474	●
INK 40-S	0301555	
Inductive proximity switches with lateral outlet		
IN 40-S-M12-SA	0301577	
IN 40-S-M8-SA	0301473	●
INK 40-S-SA	0301565	
Connection cables		
KA BG08-L 3P-0300-PNP	0301622	●
KA BG08-L 3P-0500-PNP	0301623	
KA BG12-L 3P-0500-PNP	30016369	
KA BW08-L 3P-0300-PNP	0301594	
KA BW08-L 3P-0500-PNP	0301502	
KA BW12-L 3P-0300-PNP	0301503	
KA BW12-L 3P-0500-PNP	0301507	
Clip for plug / socket		
CLI-M12	0301464	
CLI-M8	0301463	
Cable extensions		
KV BG12-SG12 3P-0030-PNP	0301999	
KV BG12-SG12 3P-0060-PNP	0301998	
KV BW08-SG08 3P-0030-PNP	0301495	
KV BW08-SG08 3P-0100-PNP	0301496	
KV BW08-SG08 3P-0200-PNP	0301497	●
KV BW12-SG12 3P-0030-PNP	0301595	
KV BW12-SG12 3P-0100-PNP	0301596	
KV BW12-SG12 3P-0200-PNP	0301597	
Sensor distributor		
V2-M12	0301776	●
V2-M8	0301775	●
V4-M12	0301747	
V4-M8	0301746	

ⓘ Two sensors (closer/S) are required for each unit, plus extension cables as an option. Please note the minimum permitted bending radii for the sensor cables, which are generally 35 mm.

Flexible position sensor

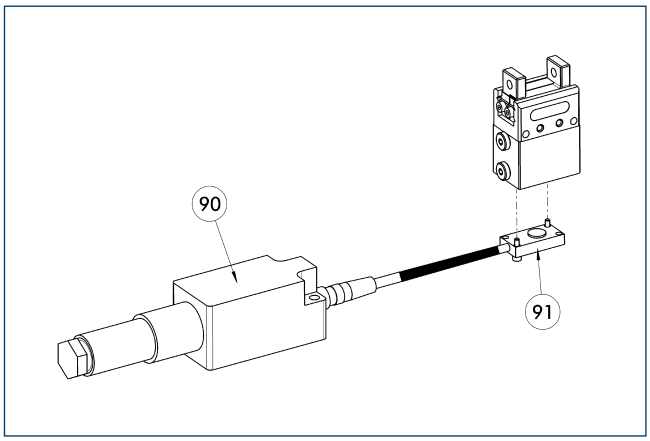

(90) FPS-F5 / -F5 T electronic processor
(91) FPS-S sensor

The FPS monitoring is only possible for this size in combination with the appropriate FPS variant of the gripper.

Description	ID	Often combined
Sensor		
FPS-S 13	0301705	
Electronic processor		
FPS-F5	0301805	●
FPS-F5 T	0301807	

ⓘ When using a FPS system, a FPS sensor (FPS-S) and a control unit (FPS-F5 / F5 T) are required for each gripper as well as a mounting kit (AS), if listed. Cable extensions (KV) are available as options in the "Accessories" catalog section.

MPG 40

SCHUNK Grippers pneumatic | 2-Finger Parallel Grippers | Miniature Parallel Gripper

Gripping force, O.D. gripping

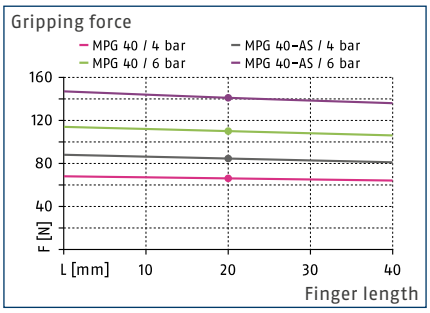

Gripping force, I.D. gripping

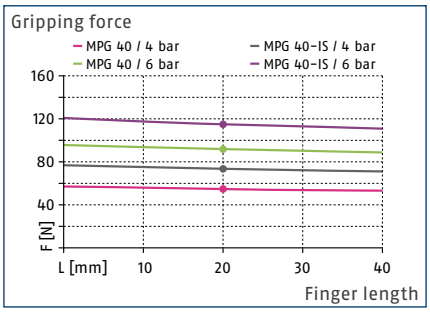

Finger load

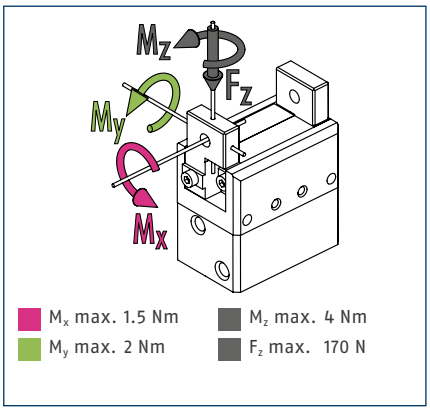

ⓘ The indicated moments and forces are static values, apply per base jaw and may occur simultaneously. M_y may arise in addition to the moment generated by the gripping force itself. If the max. permitted finger weight is exceeded, it is impreative to throttle the air supply so that the jaw movement occurs without any hitting or bouncing. Service life may be reduced.

Technical data

Description		MPG 40	MPG 40-AS	MPG 40-IS
ID		0340012	0340042	0340062
Stroke per jaw	[mm]	6	6	6
Closing- / opening force	[N]	110/90	145/-	-/115
min. spring force	[N]		35	25
Weight	[kg]	0.2	0.26	0.26
Recommended workpiece weight	[kg]	0.55	0.55	0.55
Fluid consumption per double stroke	[cm³]	3.6	10.4	8.5
min. / max. operating pressure	[bar]	2/8	4/6.5	4/6.5
Nominal operating pressure	[bar]	6	6	6
Closing- / opening time	[s]	0.05/0.05	0.055/0.08	0.08/0.055
Closing- / opening time only with spring	[s]		0.20	0.20
max. permitted finger length	[mm]	40	40	40
max. permitted weight per finger	[kg]	0.08	0.08	0.08
IP class		30	30	30
min. / max. ambient temperature	[°C]	5/90	5/90	5/90
Repeat accuracy	[mm]	0.02	0.02	0.02
Cleanroom class ISO 14644-1		5	5	5

Main view

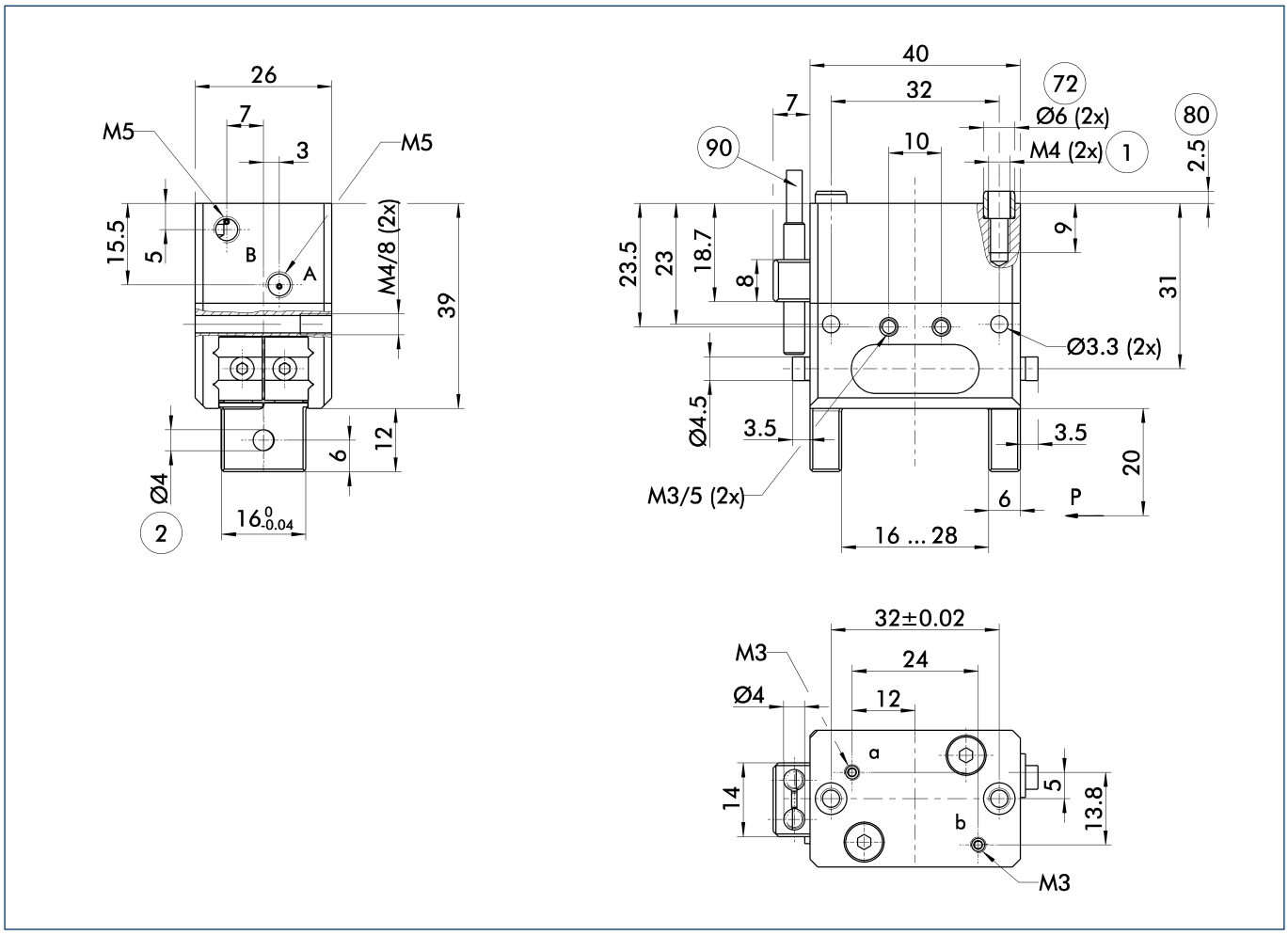

The drawing shows the basic version of the gripper with open jaws, without dimensional consideration of the options described below.

ⓘ The SDV-P pressure maintenance valve can also be used for I.D. or O.D. gripping alternatively or in addition to the spring-loaded, mechanical gripping force maintenance device (see catalog section on "Accessories").

A, a Main / direct connection, gripper opening

B, b Main / direct connection, gripper closing

(1) Gripper connection

(2) Finger connection

(72) Fit for centering sleeves

(80) Depth of the centering sleeve hole in the mating part

(90) IN ... sensor

Maximum permitted finger projection

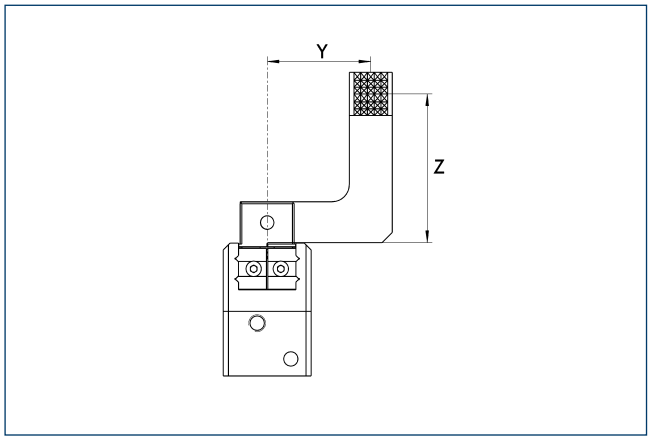

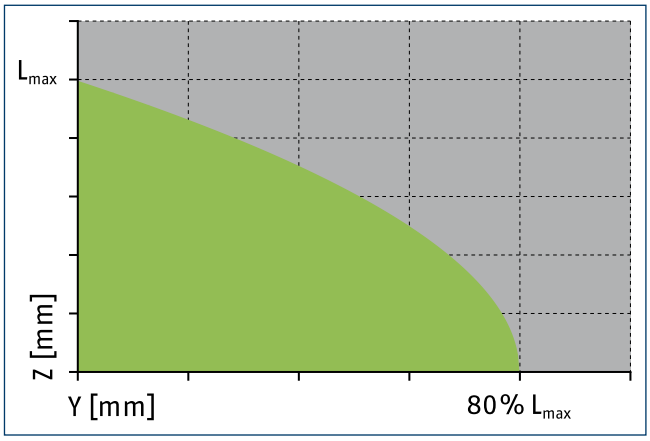

Permitted range

Inadmissible range

L_{max} is equivalent to the maximum permitted finger length, see the chart of technical specifications.

Hose-free direct connection M3

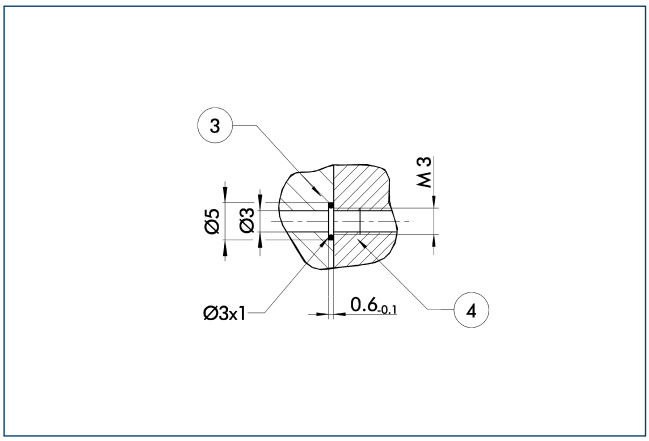

(3) Adapter (4) Gripper

The direct connection is used for supplying compressed air without hoses. Instead, the pressure medium is fed through bore-holes in the mounting plate.

Gripping force maintenance device AS / IS

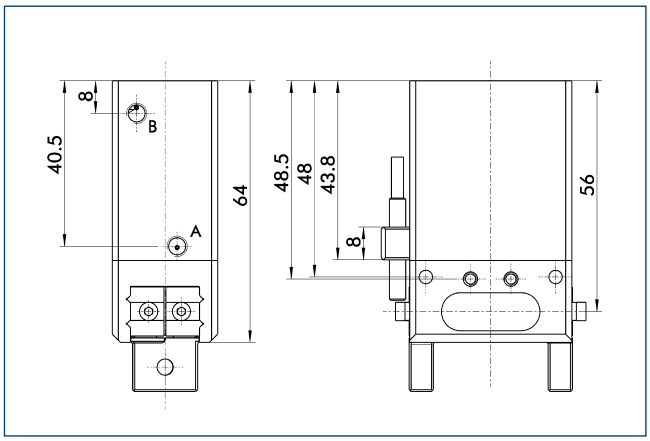

The mechanical maintenance of gripping force also assures a minimum gripping force in the case of a loss of pressure. With the AS / S variant, this acts as a closing force, and as an opening force for the IS variant. The maintenance of gripping force element can also be used as a means for increasing gripping force or for single actuated gripping.

Jaw design

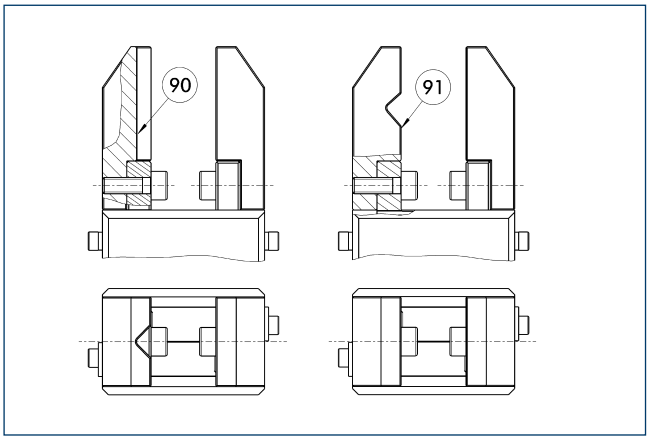

(90) Vertical prism (91) Horizontal prism

A three-point support of the gripped workpiece is beneficial for gripping the workpiece with repeat accuracy and process reliability. More than three support points lead to a redundancy of the system. The drawing shows two alternative recommendations for the jaw design for coaxial and radial gripping of a cylindrical part.

SDV-P pressure maintenance valve

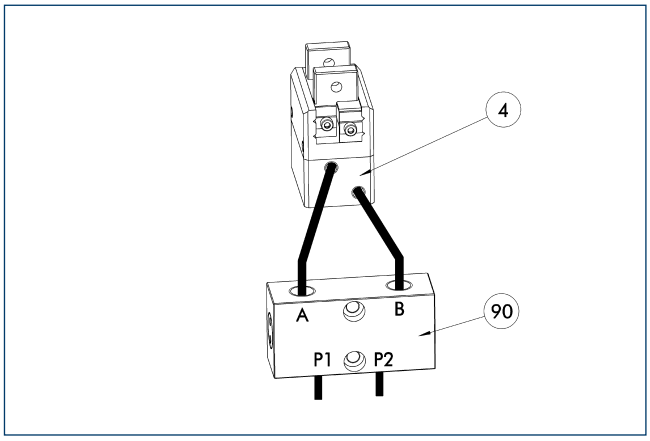

(4) Gripper (90) SDV-P pressure maintenance valve

The SDV-P pressure maintenance valves ensure that the pressure in the piston chamber of pneumatic gripping, rotary, linear, and quick-change modules is maintained temporarily during an emergency stop.

Description	ID	
Pressure maintenance valve		
SDV-P 04	0403130	

ABR-MPG-plus 40 finger blanks

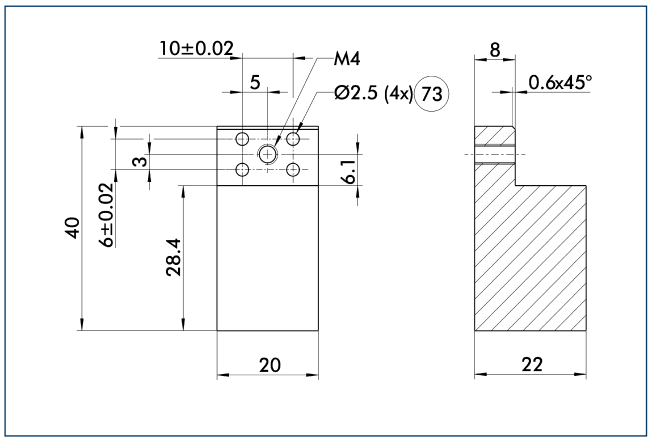

73 Fit for centering pins

Finger blanks for customized subsequent machining.

Description	ID	Material	Scope of delivery
Finger blanks			
ABR-MPG-plus 40	0340213	Aluminum	2

OAS-MPG-plus 40 object distance sensor

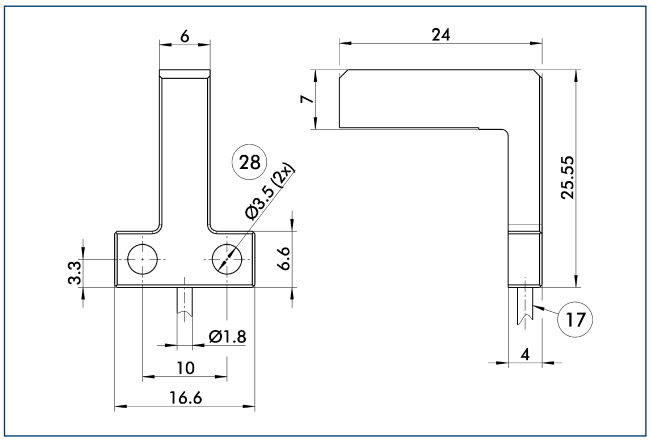

17 Cable outlet
28 Through-bore

Description	ID	
Object distance sensor		
OAS-MPG-plus 40	0308893	

Object distance sensor

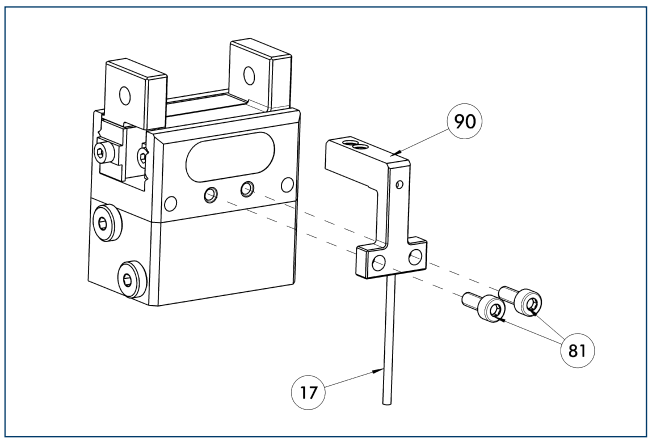

17 Cable outlet
90 OAS
81 Not included in the scope of delivery

Optical distance and presence sensor for direct mounting on the gripper. One OAS sensor per gripper can be assembled.

Description	ID	
Object distance sensor		
OAS-MPG-plus 40	0308893	
Electronic processor		
OAS-V09-D	0308865	
OAS-V10-A	0308867	
OAS-V10-D	0308866	

ⓘ The evaluation of the OAS can be done with either an analog or digital evaluation unit and with or without a display. The states which should be detected can be simply taught.

Attachment valves

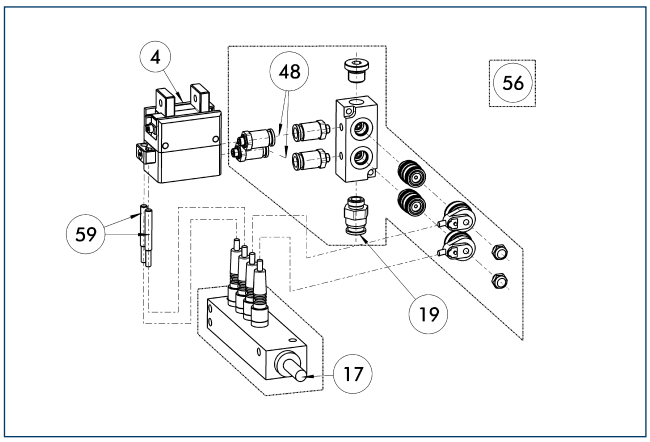

4 Gripper
17 Cable outlet
19 Air connection
48 Hose
56 Included in delivery
59 Monitoring gripping

For each unit one attachment valve ABV is required, optional with distributor for sensors and valves. Attachment valves increase the efficiency, reduce the installation work and air consumption and simplify air supply. For details please refer to the "Accessories" catalog section.

Description	ID	
Attachment valves		
ABV-MV15-S2-M5	0303375	
ABV-MV15-S2-M5-V2-M8	0303376	
ABV-MV15-S2-M5-V4-M8	0303377	
ABV-MV15-S2-M5-V8-M8	0303378	

Modular assembly automation

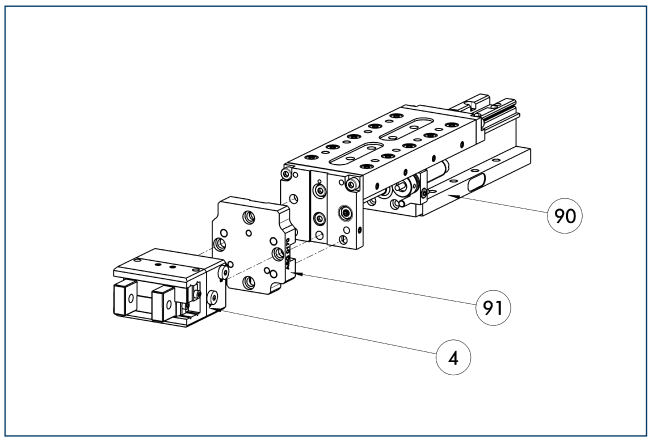

(4) Gripper
(91) ASG adapter plate
(90) CLM / KLM / LM / ELM / ELS / HLM linear module

Gripper and linear modules can be combined with standard adapters out of the modular assembly system. For more information see our catalog "Modular Assembly Automation".

Mounting kit for proximity switch

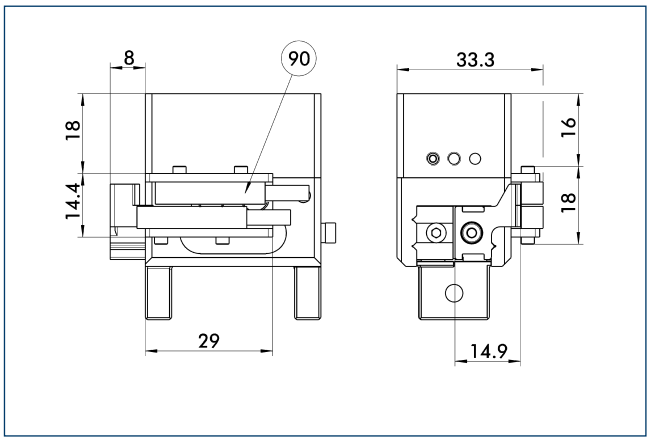

(90) IN ... sensor

The mounting kit comprises mount, switching lug / cam and mounting screws. Proximity switches must be ordered separately.

Description	ID	
Mounting kit for proximity switch		
AS-IN5-MPG-plus 40	0340152	

ⓘ This mounting kit needs to be ordered optionally as an accessory.

Inductive proximity switches

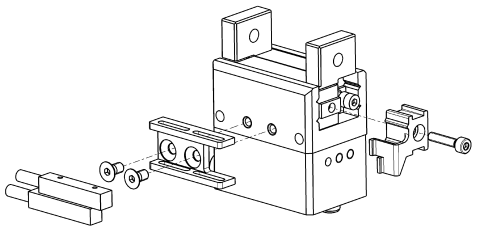

Limit position monitor can be mounted with mounting kit.

Description	ID	Often combined
Mounting kit for proximity switch		
AS-IN5-MPG-plus 40	0340152	
Inductive proximity switches		
IN 5-S-M12	0301569	
IN 5-S-M8	0301469	●
Cable extensions		
KV BG12-SG12 3P-0030-PNP	0301999	
KV BG12-SG12 3P-0060-PNP	0301998	
KV BW08-SG08 3P-0030-PNP	0301495	
KV BW08-SG08 3P-0100-PNP	0301496	
KV BW08-SG08 3P-0200-PNP	0301497	●
KV BW12-SG12 3P-0030-PNP	0301595	
KV BW12-SG12 3P-0100-PNP	0301596	
KV BW12-SG12 3P-0200-PNP	0301597	
Clip for plug / socket		
CLI-M12	0301464	
CLI-M8	0301463	
Connection cables		
KA BG08-L 3P-0300-PNP	0301622	●
KA BG08-L 3P-0500-PNP	0301623	
KA BG12-L 3P-0500-PNP	30016369	
KA BW08-L 3P-0300-PNP	0301594	
KA BW08-L 3P-0500-PNP	0301502	
KA BW12-L 3P-0300-PNP	0301503	
KA BW12-L 3P-0500-PNP	0301507	
Sensor distributor		
V2-M8	0301775	●
V2-M12	0301776	●
V4-M12	0301747	
V4-M8	0301746	
V8-M12	0301752	
V8-M8	0301751	

ⓘ Two sensors (closer/S) are required for each unit, plus extension cables as an option. This mounting kit needs to be ordered optionally as an accessory. Please note the minimum permitted bending radii for the sensor cables, which are generally 35 mm.

Inductive proximity switches

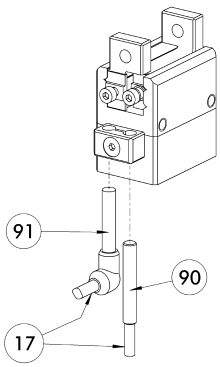

(17) Cable outlet
(91) IN ...-SA sensor
(90) IN ... sensor

Directly mounted limit position monitor.

Description	ID	Often combined
Inductive proximity switches		
IN 40-S-M12	0301574	
IN 40-S-M8	0301474	●
INK 40-S	0301555	
Inductive proximity switches with lateral outlet		
IN 40-S-M12-SA	0301577	
IN 40-S-M8-SA	0301473	●
INK 40-S-SA	0301565	
Connection cables		
KA BG08-L 3P-0300-PNP	0301622	●
KA BG08-L 3P-0500-PNP	0301623	
KA BG12-L 3P-0500-PNP	30016369	
KA BW08-L 3P-0300-PNP	0301594	
KA BW08-L 3P-0500-PNP	0301502	
KA BW12-L 3P-0300-PNP	0301503	
KA BW12-L 3P-0500-PNP	0301507	
Clip for plug / socket		
CLI-M12	0301464	
CLI-M8	0301463	
Cable extensions		
KV BG12-SG12 3P-0030-PNP	0301999	
KV BG12-SG12 3P-0060-PNP	0301998	
KV BW08-SG08 3P-0030-PNP	0301495	
KV BW08-SG08 3P-0100-PNP	0301496	
KV BW08-SG08 3P-0200-PNP	0301497	●
KV BW12-SG12 3P-0030-PNP	0301595	
KV BW12-SG12 3P-0100-PNP	0301596	
KV BW12-SG12 3P-0200-PNP	0301597	
Sensor distributor		
V2-M12	0301776	●
V2-M8	0301775	●
V4-M12	0301747	
V4-M8	0301746	

ⓘ Two sensors (closer/S) are required for each unit, plus extension cables as an option. Please note the minimum permitted bending radii for the sensor cables, which are generally 35 mm.

Mounting kit for FPS

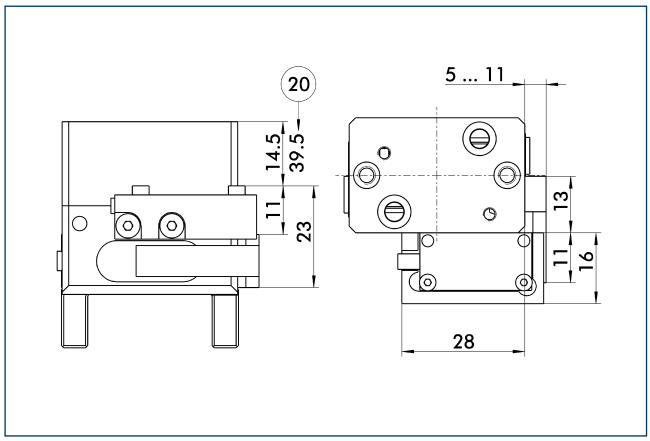

20 For AS / IS version

The following FPS position sensor can differentiate between five programmable areas and/or switching points for the stroke of a gripper, and can be used in combination with a PC as a measuring system.

Description	ID	
Mounting kit for FPS		
AS-FPS-MPG-plus 40	0301762	

ⓘ This mounting kit needs to be ordered optionally as an accessory.

Flexible position sensor

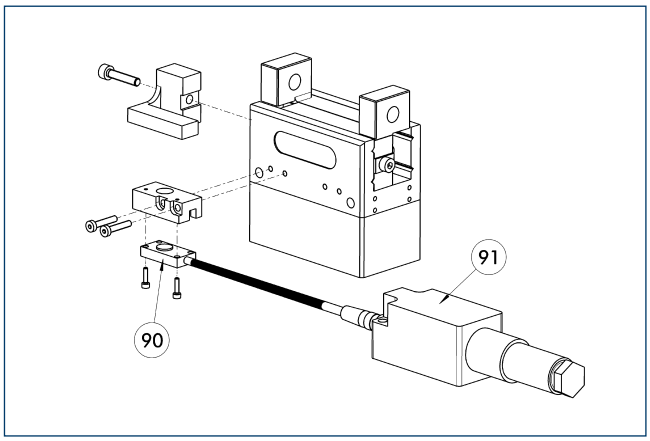

90 FPS-S sensor

91 FPS-F5 / -F5 T electronic processor

Flexible position monitoring of up to five positions.

Description	ID	Often combined
Mounting kit for FPS		
AS-FPS-MPG-plus 40	0301762	
Sensor		
FPS-S 13	0301705	
Electronic processor		
FPS-F5	0301805	●
FPS-F5 T	0301807	

ⓘ When using a FPS system, a FPS sensor (FPS-S) and a control unit (FPS-F5 / F5 T) are required for each gripper as well as a mounting kit (AS), if listed. Cable extensions (KV) are available as options in the "Accessories" catalog section.

MPG 50

SCHUNK Grippers pneumatic | 2-Finger Parallel Grippers | Miniature Parallel Gripper

Gripping force, O.D. gripping

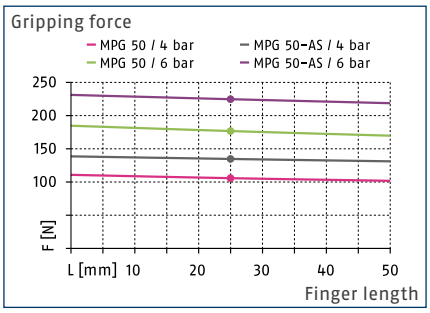

Gripping force, I.D. gripping

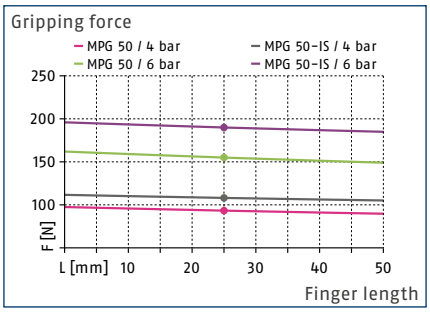

Finger load

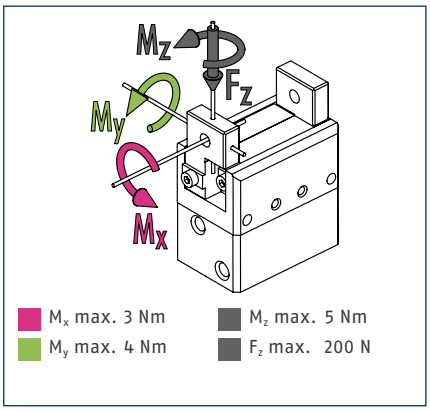

ⓘ The indicated moments and forces are static values, apply per base jaw and may occur simultaneously. M_y may arise in addition to the moment generated by the gripping force itself. If the max. permitted finger weight is exceeded, it is impreative to throttle the air supply so that the jaw movement occurs without any hitting or bouncing. Service life may be reduced.

Technical data

Description		MPG 50	MPG 50-AS	MPG 50-IS
ID		0340013	0340043	0340063
Stroke per jaw	[mm]	8	8	8
Closing- / opening force	[N]	175/155	225/-	-/190
min. spring force	[N]		50	35
Weight	[kg]	0.35	0.4	0.4
Recommended workpiece weight	[kg]	0.9	0.9	0.9
Fluid consumption per double stroke	[cm³]	7.2	15.5	12.1
min. / max. operating pressure	[bar]	2/8	4/6.5	4/6.5
Nominal operating pressure	[bar]	6	6	6
Closing- / opening time	[s]	0.035/0.035	0.035/0.05	0.05/0.035
Closing- / opening time only with spring	[s]		0.30	0.30
max. permitted finger length	[mm]	50	50	50
max. permitted weight per finger	[kg]	0.14	0.14	0.14
IP class		30	30	30
min. / max. ambient temperature	[°C]	5/90	5/90	5/90
Repeat accuracy	[mm]	0.02	0.02	0.02
Cleanroom class ISO 14644-1		5	5	5

Main view

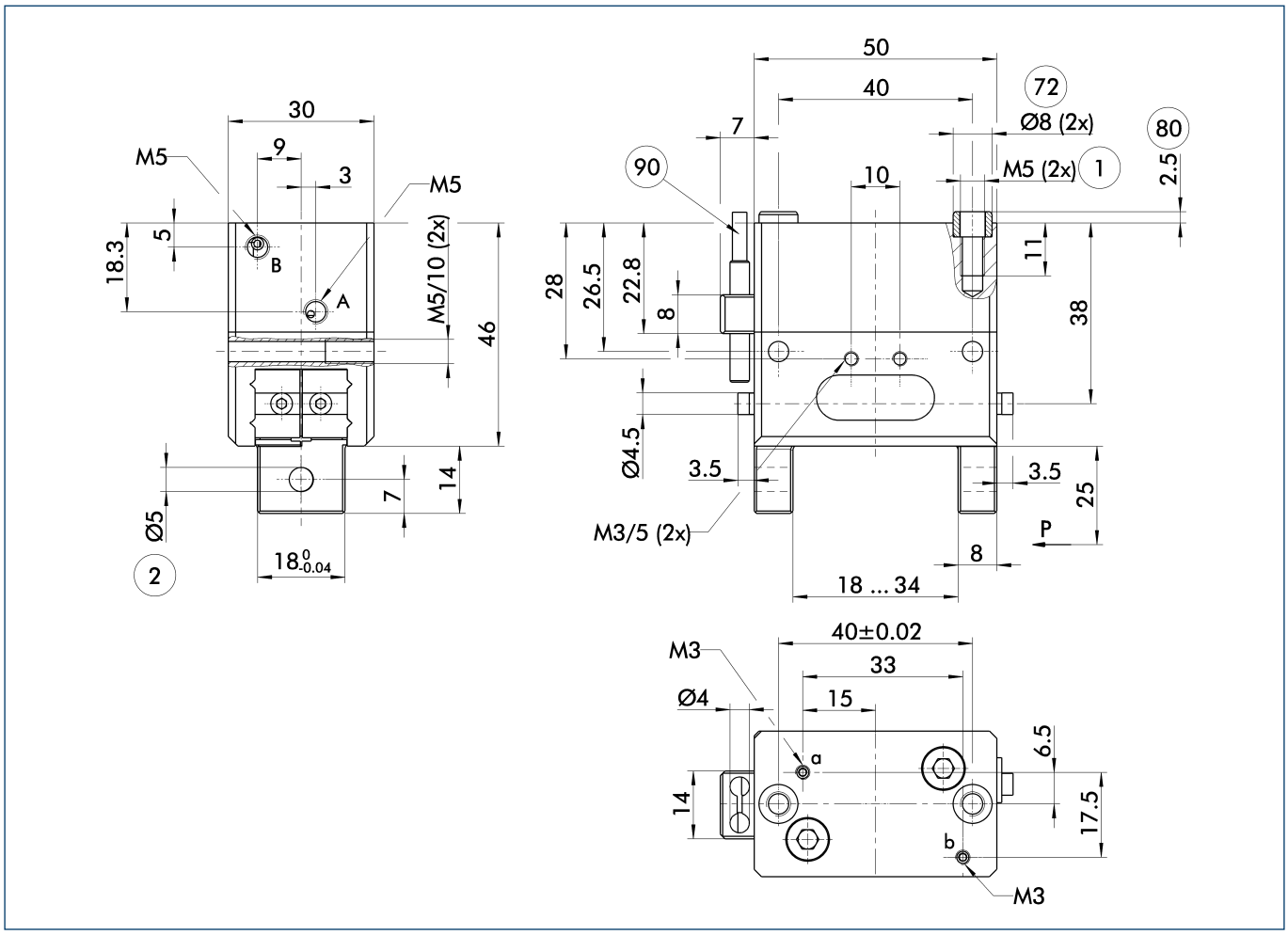

The drawing shows the basic version of the gripper with open jaws, without dimensional consideration of the options described below.

ⓘ The SDV-P pressure maintenance valve can also be used for I.D. or O.D. gripping alternatively or in addition to the spring-loaded, mechanical gripping force maintenance device (see catalog section on "Accessories").

A, a Main / direct connection, gripper opening

B, b Main / direct connection, gripper closing

(1) Gripper connection

(2) Finger connection

(72) Fit for centering sleeves

(80) Depth of the centering sleeve hole in the mating part

(90) IN ... sensor

Maximum permitted finger projection

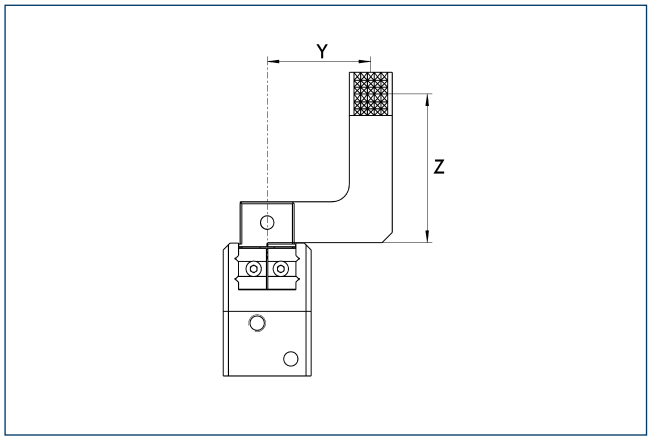

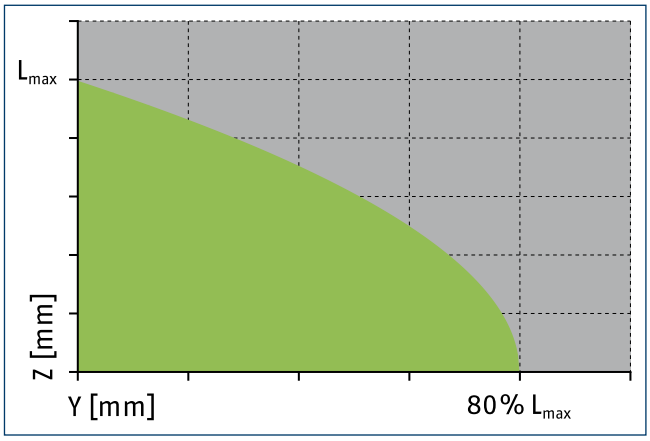

Permitted range

Inadmissible range

L_{max} is equivalent to the maximum permitted finger length, see the chart of technical specifications.

Hose-free direct connection M3

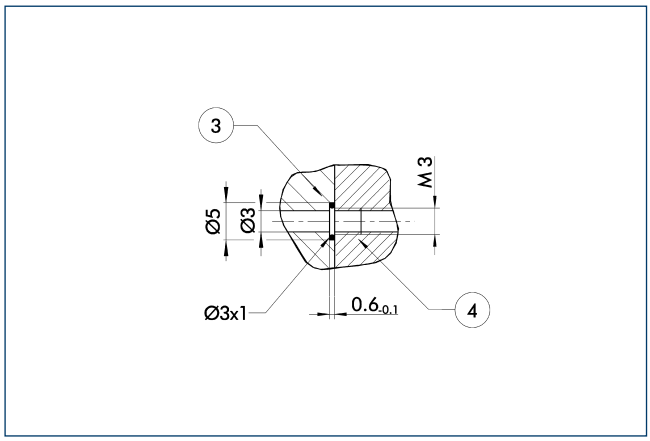

(3) Adapter (4) Gripper

The direct connection is used for supplying compressed air without hoses. Instead, the pressure medium is fed through bore-holes in the mounting plate.

Gripping force maintenance device AS / IS

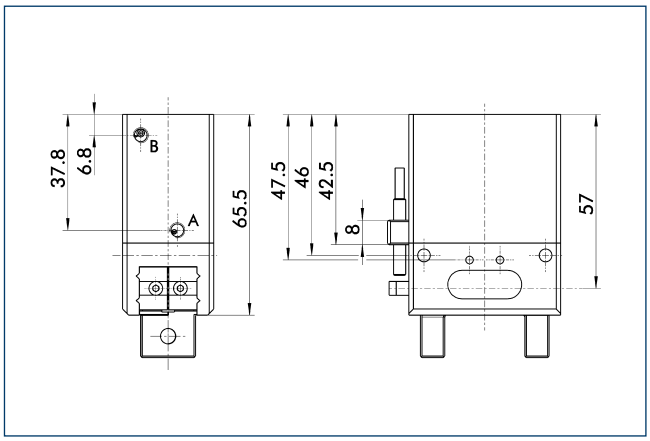

The mechanical maintenance of gripping force also assures a minimum gripping force in the case of a loss of pressure. With the AS / S variant, this acts as a closing force, and as an opening force for the IS variant. The maintenance of gripping force element can also be used as a means for increasing gripping force or for single actuated gripping.

Jaw design

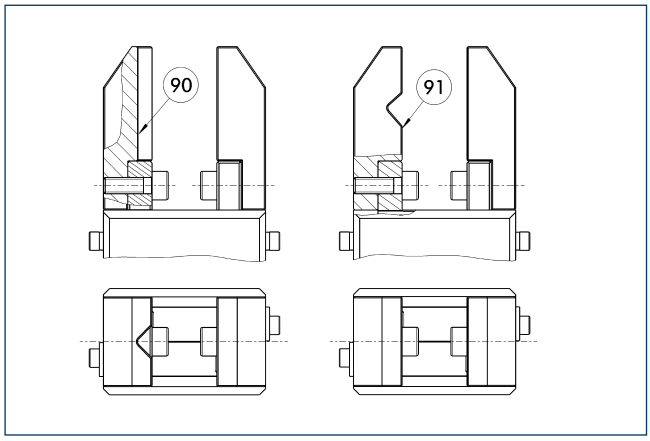

(90) Vertical prism (91) Horizontal prism

A three-point support of the gripped workpiece is beneficial for gripping the workpiece with repeat accuracy and process reliability. More than three support points lead to a redundancy of the system. The drawing shows two alternative recommendations for the jaw design for coaxial and radial gripping of a cylindrical part.

SDV-P pressure maintenance valve

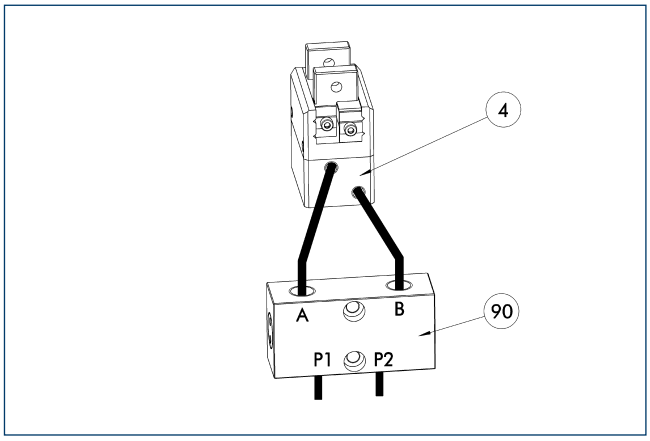

(4) Gripper (90) SDV-P pressure maintenance valve

The SDV-P pressure maintenance valves ensure that the pressure in the piston chamber of pneumatic gripping, rotary, linear, and quick-change modules is maintained temporarily during an emergency stop.

Description	ID	
Pressure maintenance valve		
SDV-P 04	0403130	

ABR-MPG-plus 50 finger blanks

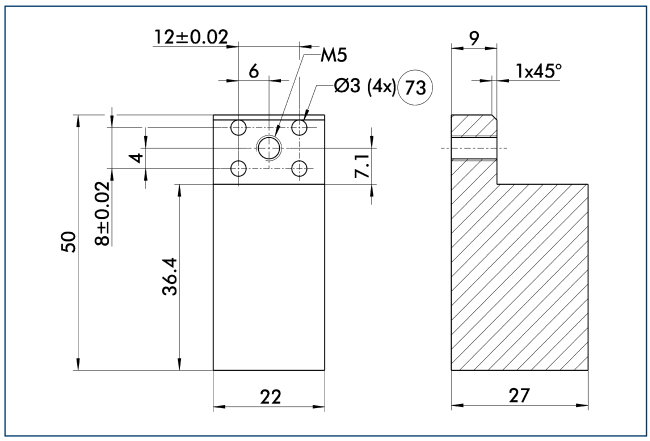

73 Fit for centering pins

Finger blanks for customized subsequent machining.

Description	ID	Material	Scope of delivery
Finger blanks			
ABR-MPG-plus 50	0340214	Aluminum	2

OAS-MPG-plus 50 object distance sensor

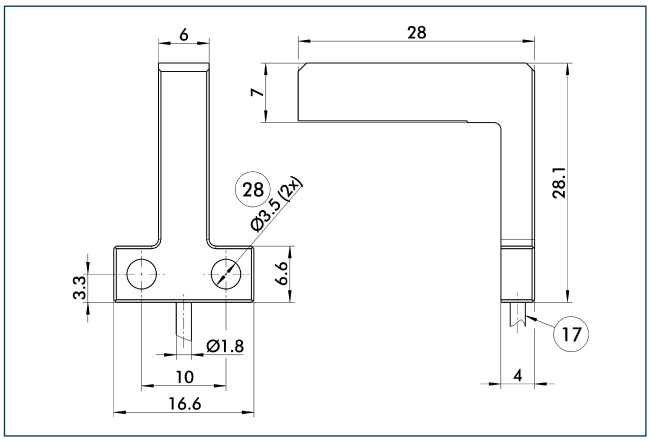

17 Cable outlet
28 Through-bore

Description	ID	
Object distance sensor		
OAS-MPG-plus 50	0308894	

Object distance sensor

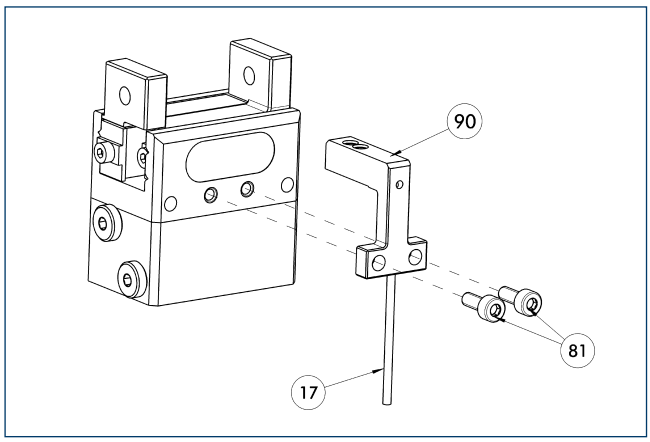

17 Cable outlet
90 OAS
81 Not included in the scope of delivery

Optical distance and presence sensor for direct mounting on the gripper. One OAS sensor per gripper can be assembled.

Description	ID	
Object distance sensor		
OAS-MPG-plus 50	0308894	
Electronic processor		
OAS-V09-D	0308865	
OAS-V10-A	0308867	
OAS-V10-D	0308866	

ⓘ The evaluation of the OAS can be done with either an analog or digital evaluation unit and with or without a display. The states which should be detected can be simply taught.

Attachment valves

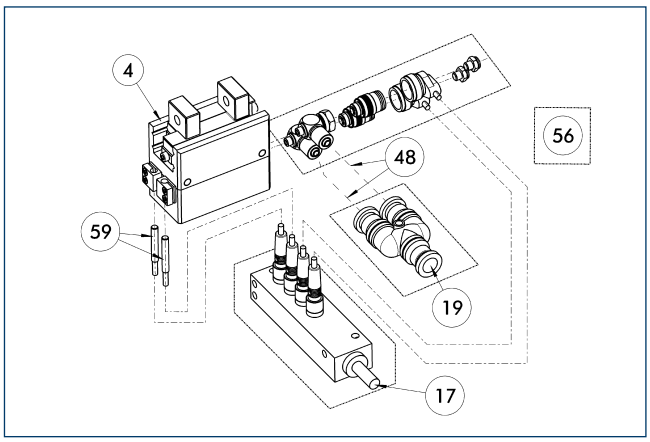

4 Gripper
17 Cable outlet
19 Air connection
48 Hose
56 Included in delivery
59 Monitoring gripping

For each unit one attachment valve ABV is required, optional with distributor for sensors and valves. Attachment valves increase the efficiency, reduce the installation work and air consumption and simplify air supply. For details please refer to the "Accessories" catalog section.

Description	ID	
Attachment valves		
ABV-MV15-M5	0303323	
ABV-MV15-M5-V2-M8	0303386	
ABV-MV15-M5-V4-M8	0303356	
ABV-MV15-M5-V8-M8	0303357	

Modular assembly automation

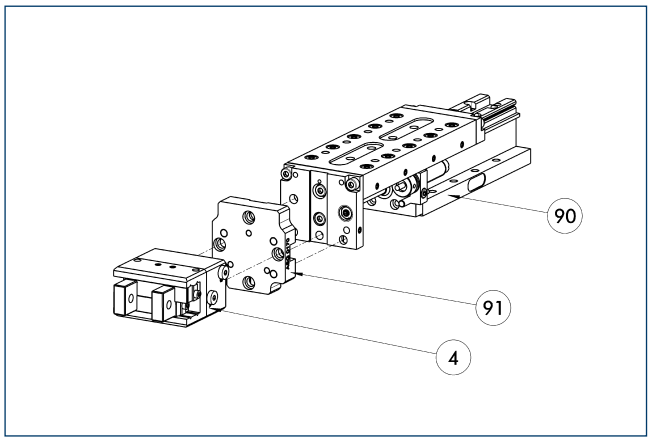

(4) Gripper
(91) ASG adapter plate
(90) CLM / KLM / LM / ELM / ELS / HLM linear module

Gripper and linear modules can be combined with standard adapters out of the modular assembly system. For more information see our catalog "Modular Assembly Automation".

Mounting kit for proximity switch

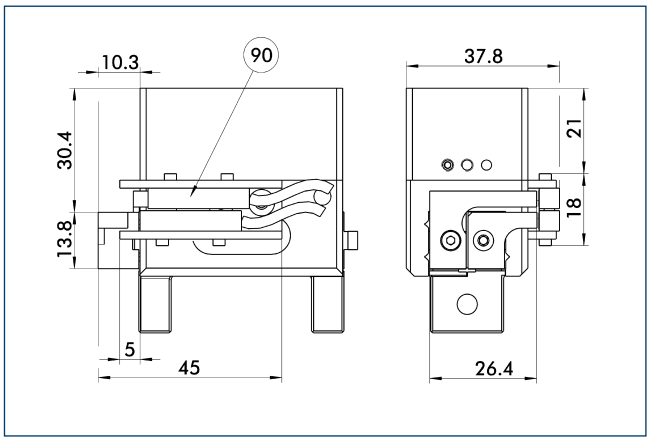

(90) IN ... sensor

Limit position monitor can be mounted with mounting kit.

Description	ID	
Mounting kit for proximity switch		
AS-IN5-MPG-plus 50	0340153	

ⓘ This mounting kit needs to be ordered optionally as an accessory.

Inductive proximity switches

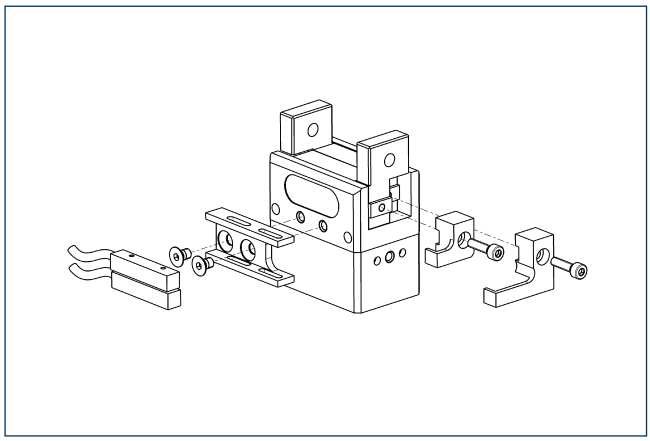

Limit position monitor can be mounted with mounting kit.

Description	ID	Often combined
Mounting kit for proximity switch		
AS-IN5-MPG-plus 50	0340153	
Inductive proximity switches		
IN 5-S-M12	0301569	
IN 5-S-M8	0301469	●
Cable extensions		
KV BG12-SG12 3P-0030-PNP	0301999	
KV BG12-SG12 3P-0060-PNP	0301998	
KV BW08-SG08 3P-0030-PNP	0301495	
KV BW08-SG08 3P-0100-PNP	0301496	
KV BW08-SG08 3P-0200-PNP	0301497	●
KV BW12-SG12 3P-0030-PNP	0301595	
KV BW12-SG12 3P-0100-PNP	0301596	
KV BW12-SG12 3P-0200-PNP	0301597	
Clip for plug / socket		
CLI-M12	0301464	
CLI-M8	0301463	
Connection cables		
KA BG08-L 3P-0300-PNP	0301622	●
KA BG08-L 3P-0500-PNP	0301623	
KA BG12-L 3P-0500-PNP	30016369	
KA BW08-L 3P-0300-PNP	0301594	
KA BW08-L 3P-0500-PNP	0301502	
KA BW12-L 3P-0300-PNP	0301503	
KA BW12-L 3P-0500-PNP	0301507	
Sensor distributor		
V2-M8	0301775	●
V2-M12	0301776	●
V4-M12	0301747	
V4-M8	0301746	
V8-M12	0301752	
V8-M8	0301751	

ⓘ Two sensors (closer/S) are required for each unit, plus extension cables as an option. This mounting kit needs to be ordered optionally as an accessory. Please note the minimum permitted bending radii for the sensor cables, which are generally 35 mm.

Inductive proximity switches

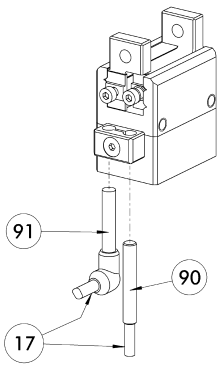

(17) Cable outlet
(91) IN ...-SA sensor
(90) IN ... sensor

Directly mounted limit position monitor.

Description	ID	Often combined
Inductive proximity switches		
IN 40-S-M12	0301574	
IN 40-S-M8	0301474	●
INK 40-S	0301555	
Inductive proximity switches with lateral outlet		
IN 40-S-M12-SA	0301577	
IN 40-S-M8-SA	0301473	●
INK 40-S-SA	0301565	
Connection cables		
KA BG08-L 3P-0300-PNP	0301622	●
KA BG08-L 3P-0500-PNP	0301623	
KA BG12-L 3P-0500-PNP	30016369	
KA BW08-L 3P-0300-PNP	0301594	
KA BW08-L 3P-0500-PNP	0301502	
KA BW12-L 3P-0300-PNP	0301503	
KA BW12-L 3P-0500-PNP	0301507	
Clip for plug / socket		
CLI-M12	0301464	
CLI-M8	0301463	
Cable extensions		
KV BG12-SG12 3P-0030-PNP	0301999	
KV BG12-SG12 3P-0060-PNP	0301998	
KV BW08-SG08 3P-0030-PNP	0301495	
KV BW08-SG08 3P-0100-PNP	0301496	
KV BW08-SG08 3P-0200-PNP	0301497	●
KV BW12-SG12 3P-0030-PNP	0301595	
KV BW12-SG12 3P-0100-PNP	0301596	
KV BW12-SG12 3P-0200-PNP	0301597	
Sensor distributor		
V2-M12	0301776	●
V2-M8	0301775	●
V4-M12	0301747	
V4-M8	0301746	

ⓘ Two sensors (closer/S) are required for each unit, plus extension cables as an option. Please note the minimum permitted bending radii for the sensor cables, which are generally 35 mm.

Mounting kit for FPS

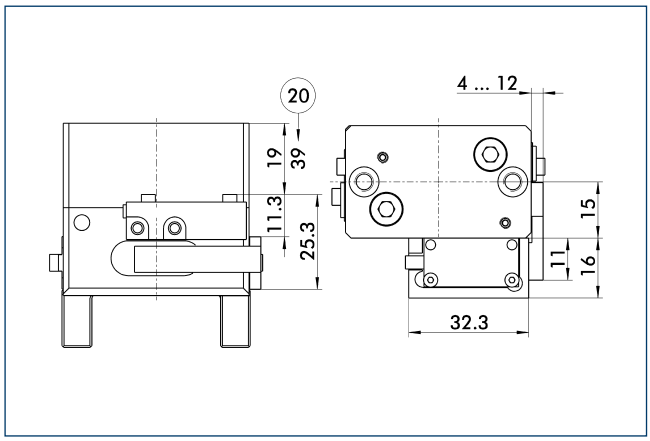

20 For AS / IS version

The following FPS position sensor can differentiate between five programmable areas and/or switching points for the stroke of a gripper, and can be used in combination with a PC as a measuring system.

Description	ID	
Mounting kit for FPS		
AS-FPS-MPG-plus 50	0301763	

ⓘ This mounting kit needs to be ordered optionally as an accessory.

Flexible position sensor

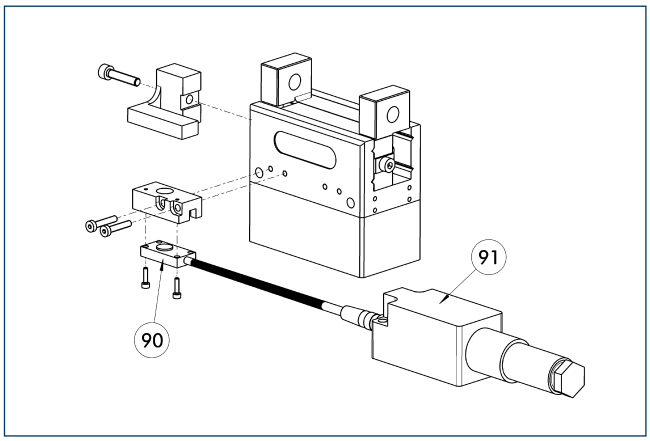

90 FPS-S sensor

91 FPS-F5 / -F5 T electronic processor

Flexible position monitoring of up to five positions.

Description	ID	Often combined
Mounting kit for FPS		
AS-FPS-MPG-plus 50	0301763	
Sensor		
FPS-S 13	0301705	
Electronic processor		
FPS-F5	0301805	●
FPS-F5 T	0301807	

ⓘ When using a FPS system, a FPS sensor (FPS-S) and a control unit (FPS-F5 / F5 T) are required for each gripper as well as a mounting kit (AS), if listed. Cable extensions (KV) are available as options in the "Accessories" catalog section.

MPG 64

SCHUNK Grippers pneumatic | 2-Finger Parallel Grippers | Miniature Parallel Gripper

Gripping force, O.D. gripping

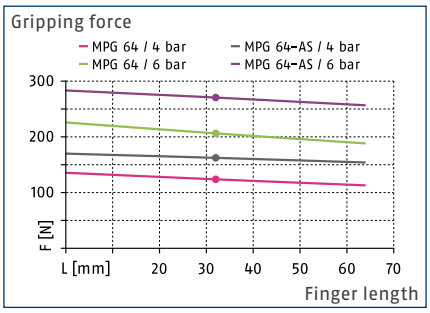

Gripping force, I.D. gripping

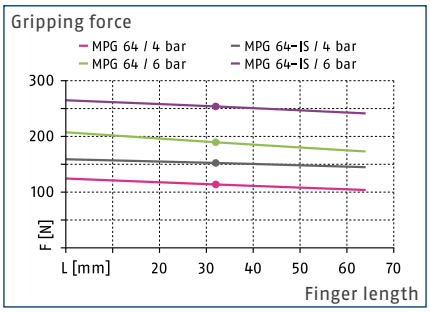

Finger load

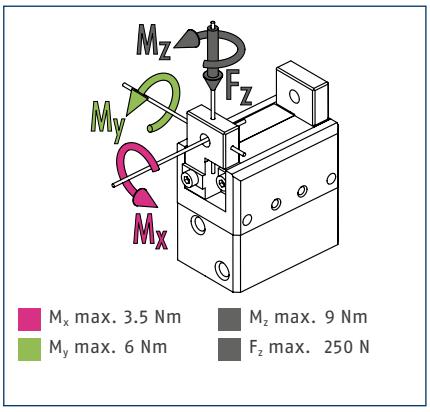

ⓘ The indicated moments and forces are static values, apply per base jaw and may occur simultaneously. M_y may arise in addition to the moment generated by the gripping force itself. If the max. permitted finger weight is exceeded, it is impreative to throttle the air supply so that the jaw movement occurs without any hitting or bouncing. Service life may be reduced.

Technical data

Description		MPG 64	MPG 64-AS	MPG 64-IS
ID		0340014	0340044	0340064
Stroke per jaw	[mm]	10	10	10
Closing- / opening force	[N]	200/190	270/-	-/245
min. spring force	[N]		70	55
Weight	[kg]	0.6	0.7	0.7
Recommended workpiece weight	[kg]	1	1	1
Fluid consumption per double stroke	[cm³]	12	21.5	19.5
min. / max. operating pressure	[bar]	2/8	4/6.5	4/6.5
Nominal operating pressure	[bar]	6	6	6
Closing- / opening time	[s]	0.045/0.045	0.045/0.06	0.06/0.045
Closing- / opening time only with spring	[s]		0.30	0.30
max. permitted finger length	[mm]	64	64	64
max. permitted weight per finger	[kg]	0.24	0.24	0.24
IP class		30	30	30
min. / max. ambient temperature	[°C]	5/90	5/90	5/90
Repeat accuracy	[mm]	0.02	0.02	0.02
Cleanroom class ISO 14644-1		5	5	5

Main view

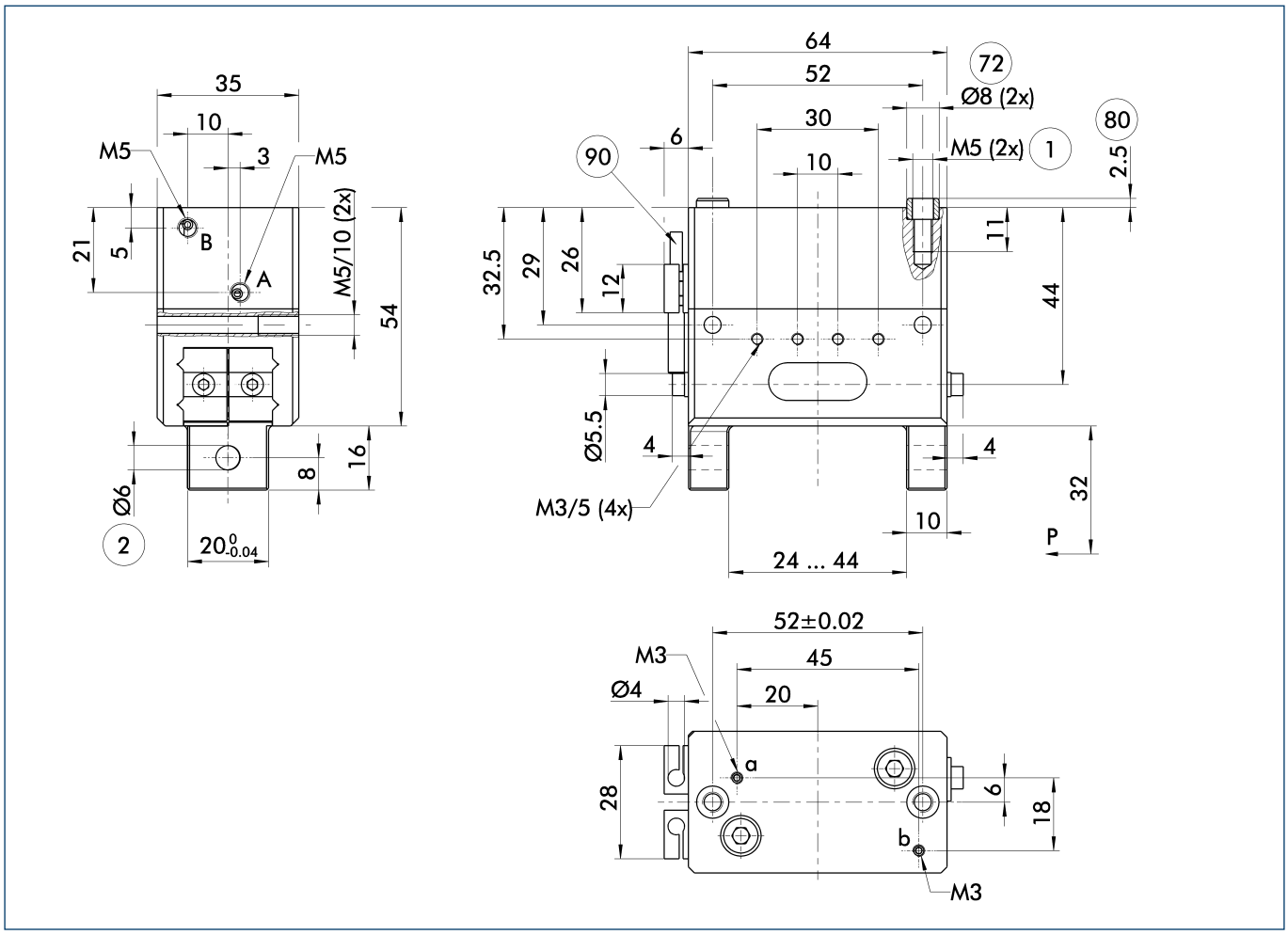

The drawing shows the basic version of the gripper with open jaws, without dimensional consideration of the options described below.

ⓘ The SDV-P pressure maintenance valve can also be used for I.D. or O.D. gripping alternatively or in addition to the spring-loaded, mechanical gripping force maintenance device (see catalog section on "Accessories").

A, a Main / direct connection, gripper opening

B, b Main / direct connection, gripper closing

(1) Gripper connection

(2) Finger connection

(72) Fit for centering sleeves

(80) Depth of the centering sleeve hole in the mating part

(90) IN ... sensor

Maximum permitted finger projection

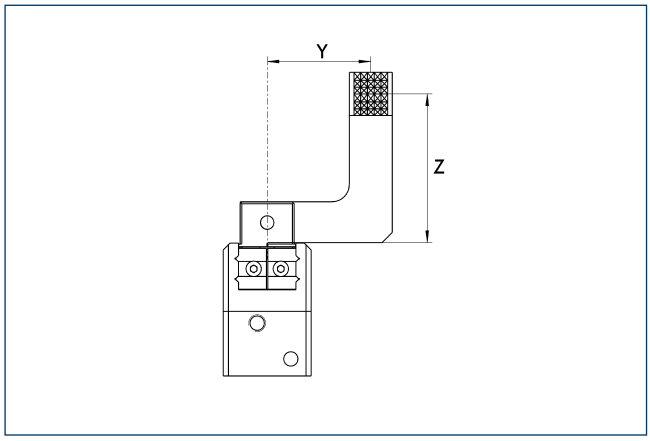

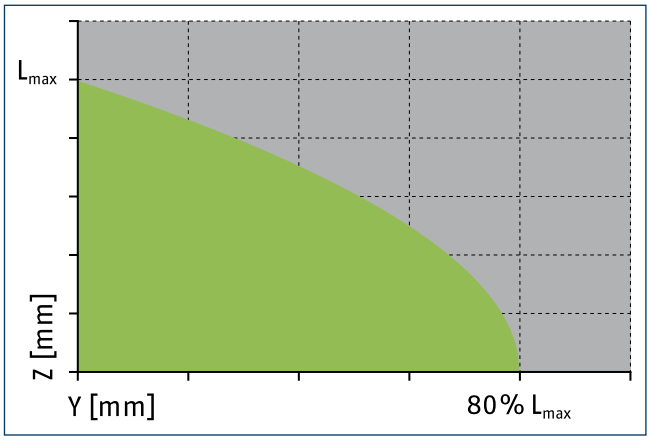

Permitted range

Inadmissible range

L_{max} is equivalent to the maximum permitted finger length, see the chart of technical specifications.

Hose-free direct connection M3

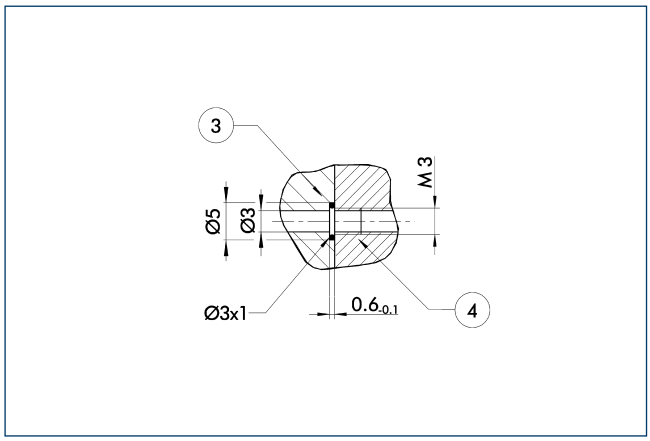

(3) Adapter (4) Gripper

The direct connection is used for supplying compressed air without hoses. Instead, the pressure medium is fed through bore-holes in the mounting plate.

Gripping force maintenance device AS / IS

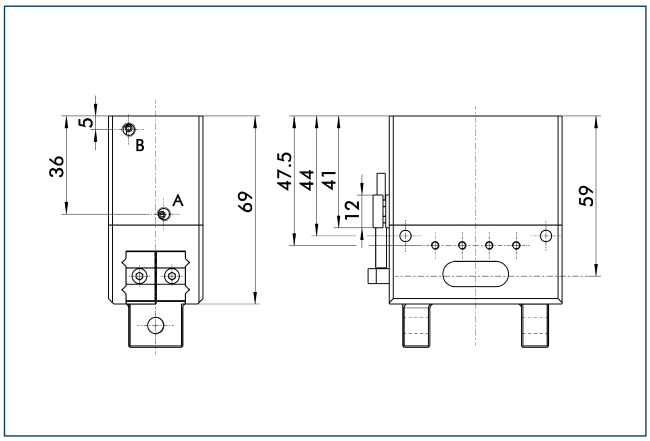

The mechanical maintenance of gripping force also assures a minimum gripping force in the case of a loss of pressure. With the AS / S variant, this acts as a closing force, and as an opening force for the IS variant. The maintenance of gripping force element can also be used as a means for increasing gripping force or for single actuated gripping.

Jaw design

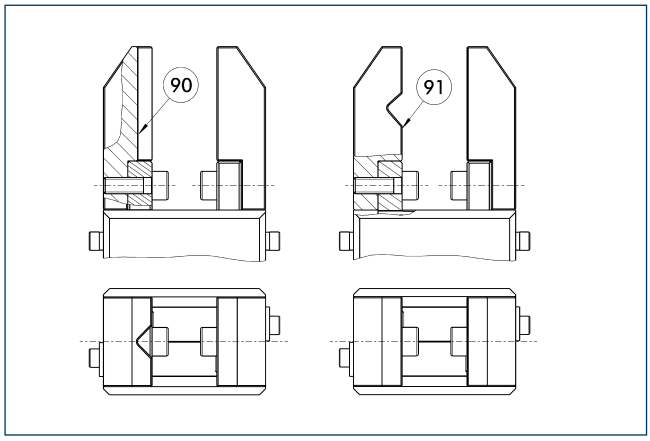

(90) Vertical prism (91) Horizontal prism

A three-point support of the gripped workpiece is beneficial for gripping the workpiece with repeat accuracy and process reliability. More than three support points lead to a redundancy of the system. The drawing shows two alternative recommendations for the jaw design for coaxial and radial gripping of a cylindrical part.

SDV-P pressure maintenance valve

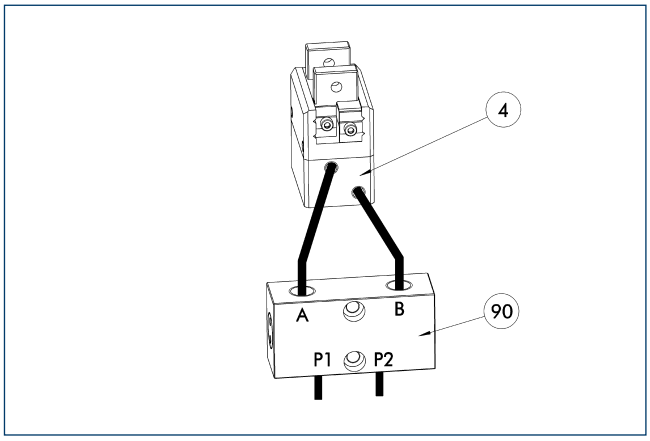

(4) Gripper (90) SDV-P pressure maintenance valve

The SDV-P pressure maintenance valves ensure that the pressure in the piston chamber of pneumatic gripping, rotary, linear, and quick-change modules is maintained temporarily during an emergency stop.

Description	ID	
Pressure maintenance valve		
SDV-P 04	0403130	

ABR-MPG-plus 64 finger blanks

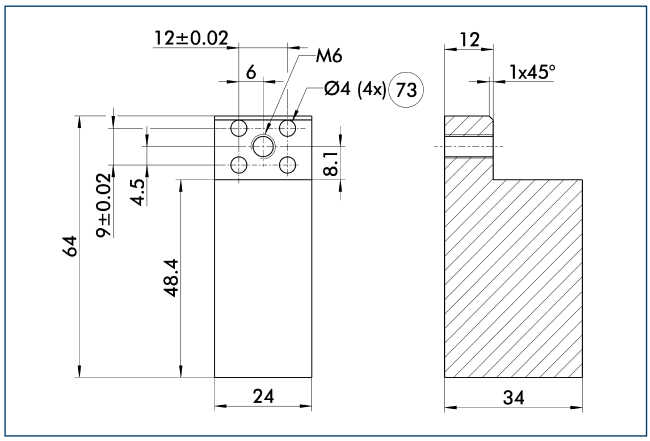

73 Fit for centering pins

Finger blanks for customized subsequent machining.

Description	ID	Material	Scope of delivery
Finger blanks			
ABR-MPG-plus 64	0340215	Aluminum	2

OAS-MPG-plus 64 object distance sensor

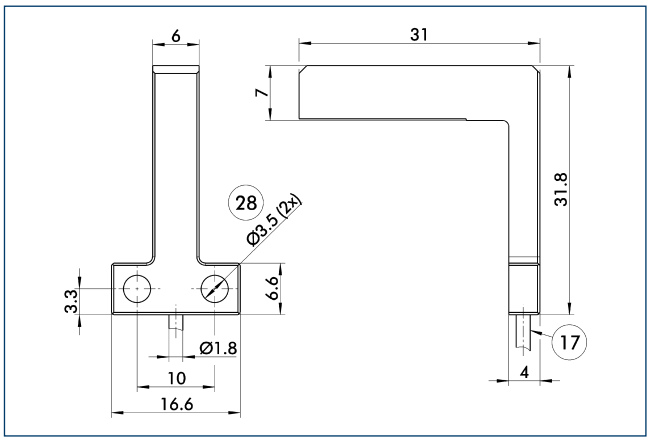

17 Cable outlet
28 Through-bore

Description	ID	
Object distance sensor		
OAS-MPG-plus 64	0308895	

Object distance sensor

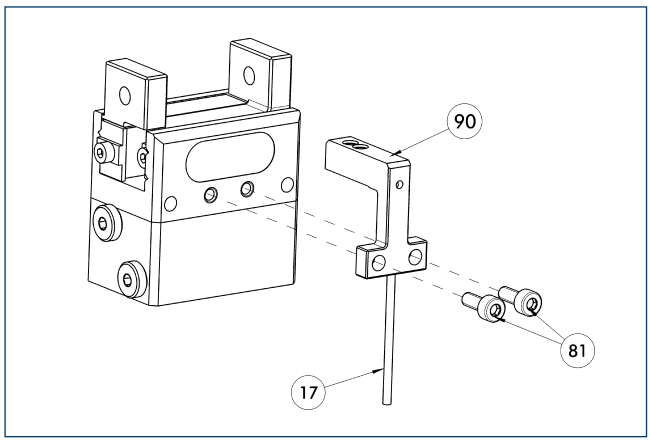

17 Cable outlet
90 OAS
81 Not included in the scope of delivery

Optical distance and presence sensor for direct mounting on the gripper. One OAS sensor per gripper can be assembled.

Description	ID	
Object distance sensor		
OAS-MPG-plus 64	0308895	
Electronic processor		
OAS-V09-D	0308865	
OAS-V10-A	0308867	
OAS-V10-D	0308866	

ⓘ The evaluation of the OAS can be done with either an analog or digital evaluation unit and with or without a display. The states which should be detected can be simply taught.

Attachment valves

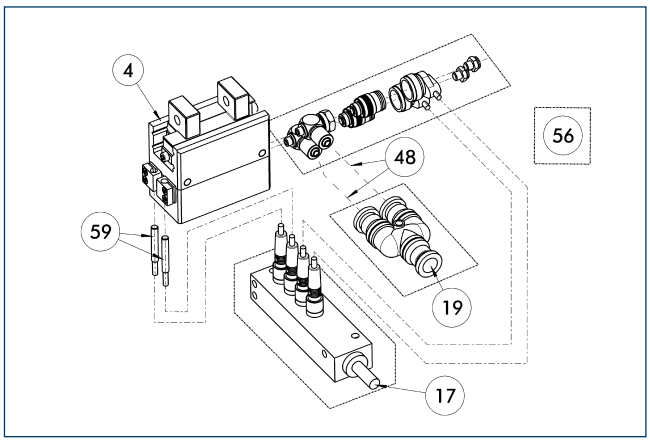

4 Gripper
17 Cable outlet
19 Air connection
48 Hose
56 Included in delivery
59 Monitoring gripping

For each unit one attachment valve ABV is required, optional with distributor for sensors and valves. Attachment valves increase the efficiency, reduce the installation work and air consumption and simplify air supply. For details please refer to the "Accessories" catalog section.

Description	ID	
Attachment valves		
ABV-MV25-M5	0303326	
ABV-MV25-M5-V2-M8	0303392	
ABV-MV25-M5-V4-M8	0303362	
ABV-MV25-M5-V8-M8	0303363	

Modular assembly automation

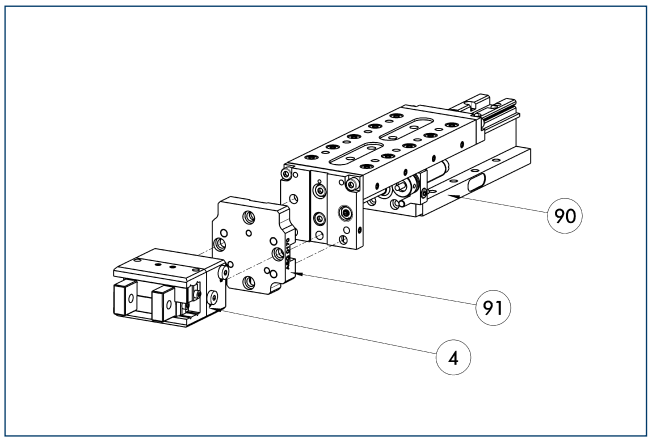

(4) Gripper
(91) ASG adapter plate
(90) CLM / KLM / LM / ELM / ELS / HLM linear module

Gripper and linear modules can be combined with standard adapters out of the modular assembly system. For more information see our catalog "Modular Assembly Automation".

Mounting kit for proximity switch

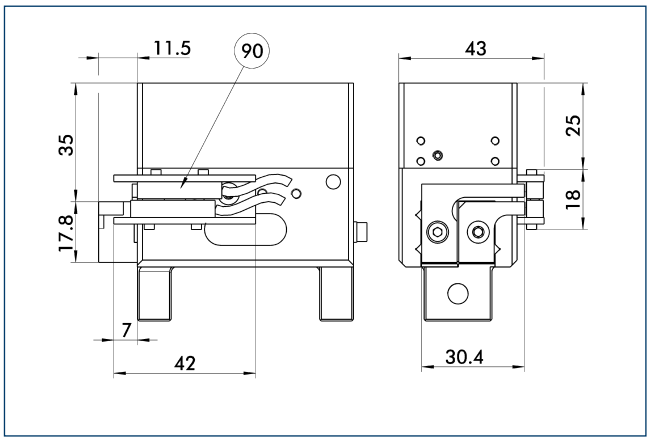

(90) IN ... sensor

Limit position monitor can be mounted with mounting kit.

Description	ID	
Mounting kit for proximity switch		
AS-MPG 64	0340154	

ⓘ This mounting kit needs to be ordered optionally as an accessory.

Inductive proximity switches

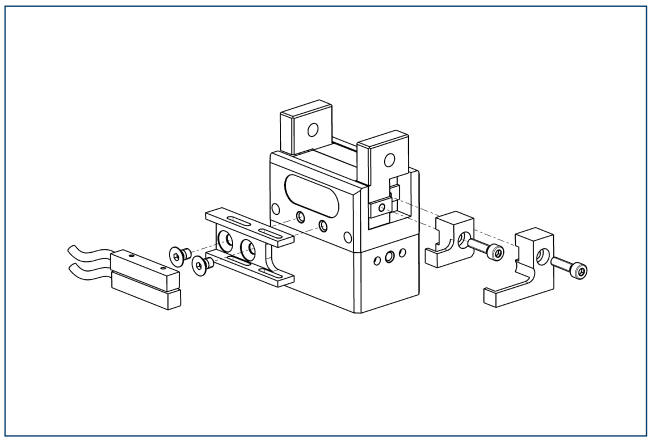

Limit position monitor can be mounted with mounting kit.

Description	ID	Often combined
Mounting kit for proximity switch		
AS-MPG 64	0340154	
Inductive proximity switches		
IN 5-S-M12	0301569	
IN 5-S-M8	0301469	●
Cable extensions		
KV BG12-SG12 3P-0030-PNP	0301999	
KV BG12-SG12 3P-0060-PNP	0301998	
KV BW08-SG08 3P-0030-PNP	0301495	
KV BW08-SG08 3P-0100-PNP	0301496	
KV BW08-SG08 3P-0200-PNP	0301497	●
KV BW12-SG12 3P-0030-PNP	0301595	
KV BW12-SG12 3P-0100-PNP	0301596	
KV BW12-SG12 3P-0200-PNP	0301597	
Clip for plug / socket		
CLI-M12	0301464	
CLI-M8	0301463	
Connection cables		
KA BG08-L 3P-0300-PNP	0301622	●
KA BG08-L 3P-0500-PNP	0301623	
KA BG12-L 3P-0500-PNP	30016369	
KA BW08-L 3P-0300-PNP	0301594	
KA BW08-L 3P-0500-PNP	0301502	
KA BW12-L 3P-0300-PNP	0301503	
KA BW12-L 3P-0500-PNP	0301507	
Sensor distributor		
V2-M8	0301775	●
V2-M12	0301776	●
V4-M12	0301747	
V4-M8	0301746	
V8-M12	0301752	
V8-M8	0301751	

ⓘ Two sensors (closer/S) are required for each unit, plus extension cables as an option. This mounting kit needs to be ordered optionally as an accessory. Please note the minimum permitted bending radii for the sensor cables, which are generally 35 mm.

Inductive proximity switches

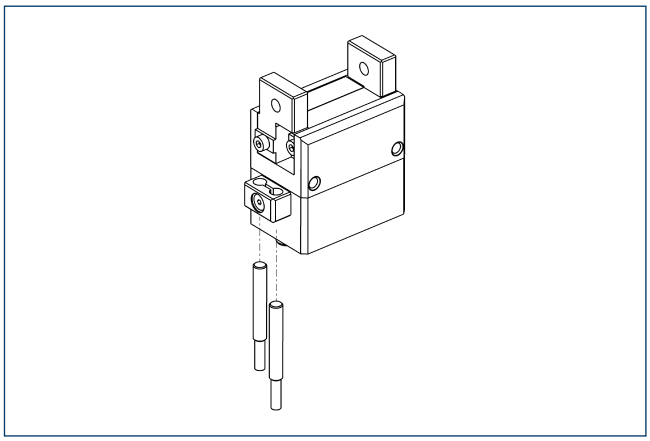

Directly mounted limit position monitor.

Description	ID	Often combined
Inductive proximity switches		
IN 40-S-M12	0301574	
IN 40-S-M8	0301474	●
INK 40-S	0301555	
Inductive proximity switches with lateral outlet		
IN 40-S-M12-SA	0301577	
IN 40-S-M8-SA	0301473	●
INK 40-S-SA	0301565	
Connection cables		
KA BG08-L 3P-0300-PNP	0301622	●
KA BG08-L 3P-0500-PNP	0301623	
KA BG12-L 3P-0500-PNP	30016369	
KA BW08-L 3P-0300-PNP	0301594	
KA BW08-L 3P-0500-PNP	0301502	
KA BW12-L 3P-0300-PNP	0301503	
KA BW12-L 3P-0500-PNP	0301507	
Clip for plug / socket		
CLI-M12	0301464	
CLI-M8	0301463	
Cable extensions		
KV BG12-SG12 3P-0030-PNP	0301999	
KV BG12-SG12 3P-0060-PNP	0301998	
KV BW08-SG08 3P-0030-PNP	0301495	
KV BW08-SG08 3P-0100-PNP	0301496	
KV BW08-SG08 3P-0200-PNP	0301497	●
KV BW12-SG12 3P-0030-PNP	0301595	
KV BW12-SG12 3P-0100-PNP	0301596	
KV BW12-SG12 3P-0200-PNP	0301597	
Sensor distributor		
V2-M12	0301776	●
V2-M8	0301775	●
V4-M12	0301747	
V4-M8	0301746	

ⓘ Two sensors (closer/S) are required for each unit, plus extension cables as an option. Please note the minimum permitted bending radii for the sensor cables, which are generally 35 mm.

Mounting kit for FPS

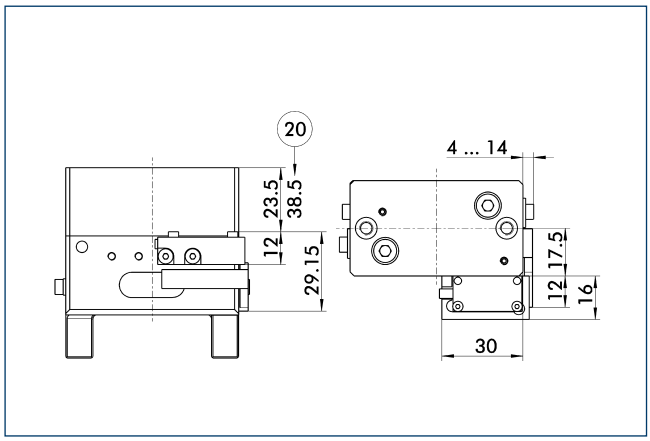

20 For AS / IS version

The following FPS position sensor can differentiate between five programmable areas and/or switching points for the stroke of a gripper, and can be used in combination with a PC as a measuring system.

Description	ID	
Mounting kit for FPS		
AS-FPS-MPG 64	0301764	

ⓘ This mounting kit needs to be ordered optionally as an accessory.

Flexible position sensor

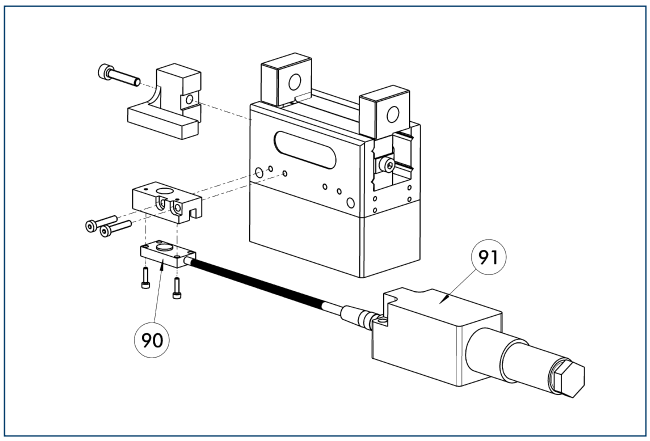

90 FPS-S sensor

91 FPS-F5 / -F5 T electronic processor

Flexible position monitoring of up to five positions.

Description	ID	Often combined
Mounting kit for FPS		
AS-FPS-MPG 64	0301764	
Sensor		
FPS-S 13	0301705	
Electronic processor		
FPS-F5	0301805	●
FPS-F5 T	0301807	

ⓘ When using a FPS system, a FPS sensor (FPS-S) and a control unit (FPS-F5 / F5 T) are required for each gripper as well as a mounting kit (AS), if listed. Cable extensions (KV) are available as options in the "Accessories" catalog section.

Compact. Cost effective. Flexible.
KTG Small Components Gripper

2-finger parallel gripper with center bore

Field of Application

Gripping and moving of small to medium-sized workpieces in low contaminated environments, equipped with end-to-end center bore for workpiece feeding, sensor systems or actuators

Advantages – Your benefit

Low weight for weight-optimized handling solutions

Large stroke in proportion to size

Base jaws guided on roller bearings for precise gripping

Center through-hole for workpiece feeding, sensor systems or actuators

Air supply via hose-free direct connection or screw connections for flexible pressure supply in all automated systems

Sizes	Weight	Gripping force	Stroke per jaw	Workpiece weight
Quantity: 1	0.08 kg	13 N	4.5 mm	0.07 kg

Functional Description

By pressurizing the first or second piston, the base jaws which are individually guided by a carrier on the piston, are moved.

The movement is synchronized by means of lever kinematics.

① **Kinematics**
Synchronization using lever principle for centric clamping

② **Center bore**
for workpiece feeding, for sensor systems, actuators (ejectors) or optical workpiece recognition

③ **Drive**
through pneumatic double piston system

④ **Profiled rail guide**
Precise gripping through base jaw guide with minimum play

⑤ **Housing**
Weight-optimized through application of high-strength aluminum alloy

CAD data, operating manuals and other current product documents are available at **www.schunk.com**

General Notes about the Series

Operating principle: synchronized double piston

Housing material: Aluminum alloy, anodized

Base jaw material: Aluminum alloy, anodized

Actuation: pneumatic, with filtered compressed air as per DIN ISO 8573-1: 7 4 4

Warranty: 24 months (details, general terms and conditions and operating manuals can be downloaded at www.schunk.com)

Scope of delivery: Mount for proximity switch, centering sleeves, O-rings for direct connection, assembly and operating manual with declaration of incorporation.

Gripping force maintenance device: possible with SDV-P pressure maintenance valve

Gripping force: is the arithmetic total of the gripping force applied to each gripper jaw at distance P (see illustration).

Finger length: is measured from the upper edge of the gripper housing in the direction of the main axis. The breach of the max. permitted finger length can bring higher abrasion. The maximum permissible finger length applies up to the nominal operating pressure. With higher pressures, the finger length must be reduced proportionally to the nominal operating pressure.

Repeat accuracy: is defined as the spread of the limit position after 100 consecutive strokes.

Workpiece weight: is calculated for a force-fit connection with a coefficient of friction of 0.1 and a safety factor of 2 against slippage of the workpiece on acceleration due to gravity g. Considerably heavier workpiece weights are permitted with form-fit gripping.

Closing and opening times: are purely the times that the base jaws or fingers are in motion. Valve switching times, hose filling times or PLC reaction times are not included in the above times and must be taken into consideration when determining cycle times.

Application example

Rotary Gripper Module for small components

1. KTG 2-Finger Parallel Gripper with workpiece-specific fingers
2. SRU-mini Miniature Rotary Unit

SCHUNK offers more ...

The following components make the product KTG even more productive – the suitable addition for the highest functionality, flexibility, reliability, and controlled production.

Centering Sleeves

Fittings

Sensor System

Sensor Cables

Finger Blanks

Plastic Inserts

Sensor Distributor

Carbide Clamping Inserts

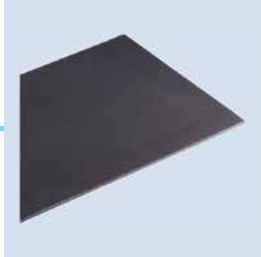

Gripper Pads

SDV-P Pressure Maintenance Valve

ⓘ Further information regarding the products can be found on the following product pages or at www.schunk.com. Please contact us for further information: SCHUNK technical hotline +49-7133-103-2696

Options and special Information

Available with reinforced jaw guidances on request. Gripping force can be maintained by the SDV-P pressure maintenance valve.

KTG 50

SCHUNK Grippers pneumatic | 2-Finger Parallel Grippers | Small Components Gripper

Gripping force

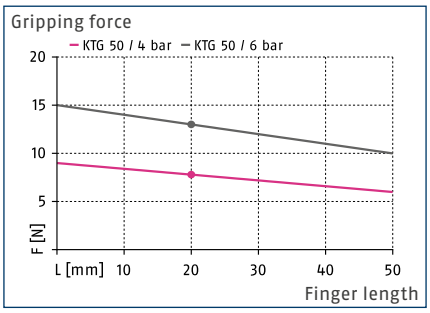

The gripping force diagram for inside and outside gripping.

Finger load

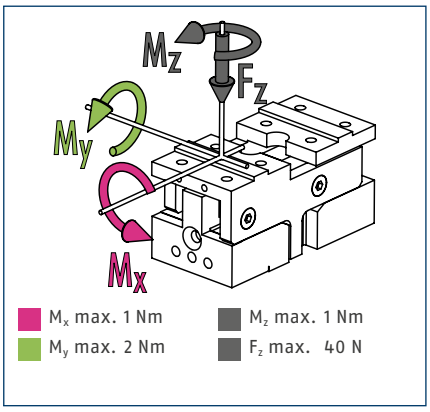

ⓘ The indicated moments and forces are static values, apply per base jaw and may occur simultaneously. M_y may arise in addition to the moment generated by the gripping force itself. If the max. permitted finger weight is exceeded, it is impreative to throttle the air supply so that the jaw movement occurs without any hitting or bouncing. Service life may be reduced.

Technical data

Description		KTG 50
ID		0300275
Stroke per jaw	[mm]	4.5
Closing- / opening force	[N]	13/13
Weight	[kg]	0.08
Recommended workpiece weight	[kg]	0.07
Fluid consumption per double stroke	[cm³]	0.23
min. / max. operating pressure	[bar]	1/7
Nominal operating pressure	[bar]	6
Closing- / opening time	[s]	0.05/0.05
max. permitted finger length	[mm]	50
max. permitted weight per finger	[kg]	0.04
IP class		20
min. / max. ambient temperature	[°C]	5/90
Repeat accuracy	[mm]	0.02
Diameter of center bore	[mm]	5

Main view

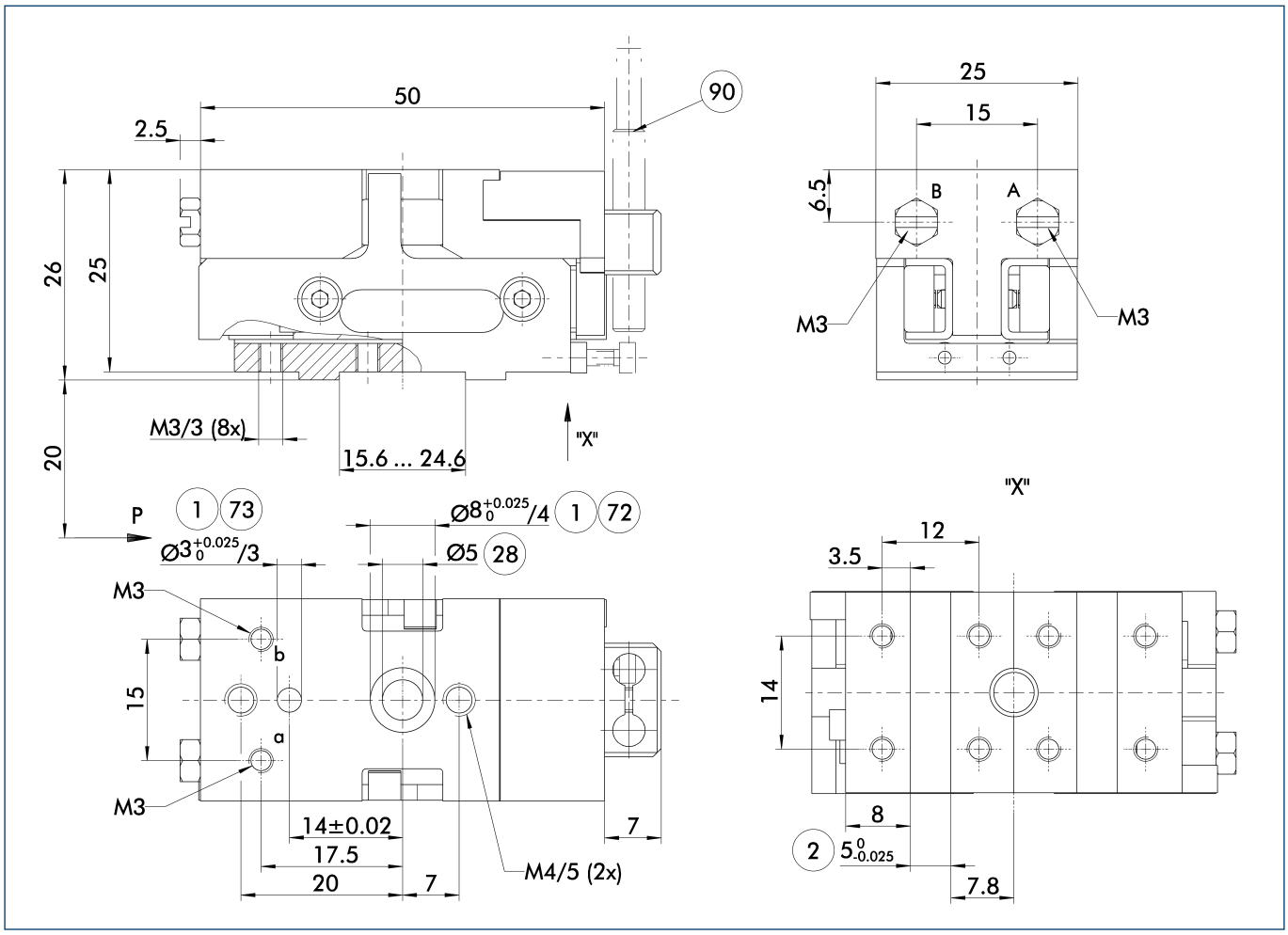

The drawing shows the gripper in the basic version with closed jaws, without dimensional consideration of the options described below.

ⓘ The SDV-P pressure maintenance valve can be used as a gripping force maintenance device (see catalog section on "Accessories").

A, a Main / direct connection, gripper opening

B, b Main / direct connection, gripper closing

(1) Gripper connection

(2) Finger connection

(28) Through-bore

(72) Fit for centering sleeves

(73) Fit for centering pins

(90) IN ... sensor

Maximum permitted finger projection

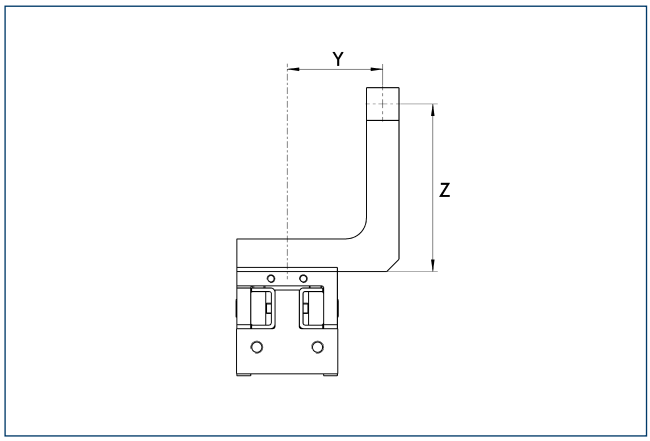

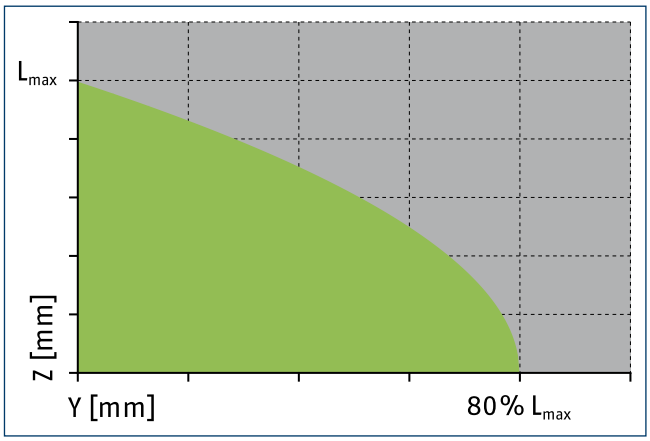

Permitted range

Inadmissible range

L_{max} is equivalent to the maximum permitted finger length, see the chart of technical specifications.

Hose-free direct connection M3

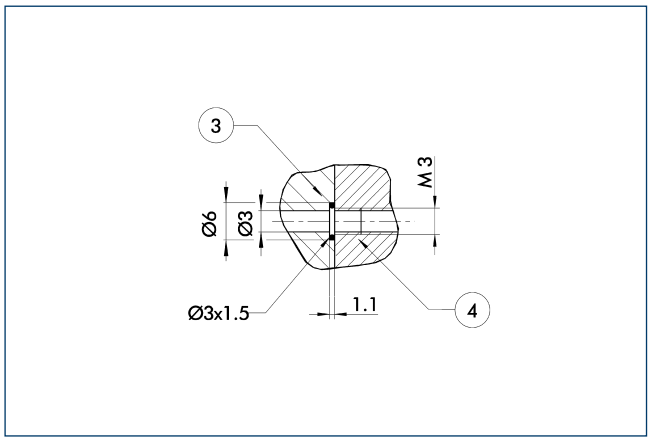

3 Adapter

4 Gripper

The direct connection is used for supplying compressed air without hoses. Instead, the pressure medium is fed through bore-holes in the mounting plate.

RB 50 finger blanks

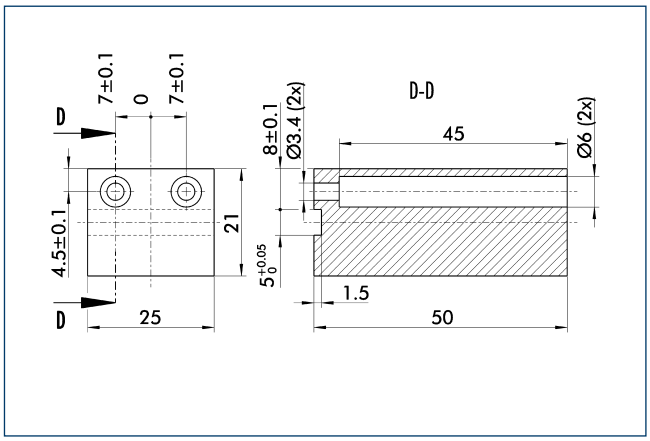

Finger blanks for customized subsequent machining.

Description	ID	Material	Scope of delivery
Finger blanks			
RB 50	0300280	Aluminum	2

Inductive proximity switches

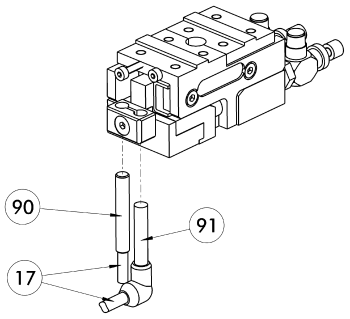

17 Cable outlet
91 IN ...-SA sensor
90 IN ... sensor

Directly mounted limit position monitor.

Description	ID	Often combined
Inductive proximity switches		
IN 40-S-M12	0301574	
IN 40-S-M8	0301474	●
INK 40-S	0301555	
Inductive proximity switch with lateral outlet		
IN 40-S-M12-SA	0301577	
IN 40-S-M8-SA	0301473	●
INK 40-S-SA	0301565	
Cable extensions		
KV BG12-SG12 3P-0030-PNP	0301999	
KV BG12-SG12 3P-0060-PNP	0301998	
KV BW08-SG08 3P-0030-PNP	0301495	
KV BW08-SG08 3P-0100-PNP	0301496	
KV BW08-SG08 3P-0200-PNP	0301497	●
KV BW12-SG12 3P-0030-PNP	0301595	
KV BW12-SG12 3P-0100-PNP	0301596	
KV BW12-SG12 3P-0200-PNP	0301597	
Clip for plug / socket		
CLI-M12	0301464	
CLI-M8	0301463	
Connection cables		
KA BG08-L 3P-0300-PNP	0301622	●
KA BG08-L 3P-0500-PNP	0301623	
KA BG12-L 3P-0500-PNP	30016369	
KA BW08-L 3P-0300-PNP	0301594	
KA BW08-L 3P-0500-PNP	0301502	
KA BW12-L 3P-0300-PNP	0301503	
KA BW12-L 3P-0500-PNP	0301507	
Sensor distributor		
V2-M8	0301775	●
V2-M12	0301776	●
V4-M12	0301747	
V4-M8	0301746	

ⓘ Two sensors (closer/S) are required for each unit, plus extension cables as an option. Please note the minimum permitted bending radii for the sensor cables, which are generally 35 mm.

Compact. Flexible. Narrow.
KGG Small Components Gripper

Narrow 2-finger parallel gripper with long stroke

Field of Application

For universal use in clean environments with light to medium workpiece weights and a large stroke range

Advantages – Your benefit

Robust T-slot guidance for high maximum moments

Pneumatic 2-piston drive design for direct power transmission and high efficiency

Rack and pinion principle for centric clamping

Mounting from two sides in three screw directions for universal and flexible gripper assembly

Air supply via hose-free direct connection or screw connections for flexible pressure supply in all automated systems

Sizes	Weight	Gripping force	Stroke per jaw	Workpiece weight
Quantity: 7	0.09 .. 4.2 kg	45 .. 540 N	10 .. 60 mm	0.23 .. 2.7 kg

Functional Description

The aligned base jaws are actuated with compressed air directly by the fixed piston, which opens and closes them.

The base jaws are synchronized by the internal rack and pinion arrangement.

① **Housing**
Weight-optimized through application of high-strength aluminum alloy

② **Base jaw**
for the connection of workpiece-specific gripper fingers

③ **Drive**
Pneumatic 2-piston system

④ **Sliding guide**
High maximum moments due to the robust T-slot guidance

⑤ **Kinematics**
Pinion and rack principle for centric clamping, even at large strokes

⑥ **Centering and mounting possibilities**
for assembly of the gripper to a base area and at the long side

CAD data, operating manuals and other current product documents are available at **www.schunk.com**

General Notes about the Series

Operating principle: Directly driven base jaws, synchronized by rack and pinion

Housing material: Aluminum alloy, anodized

Base jaw material: Aluminum alloy, anodized

Actuation: pneumatic, with filtered compressed air as per DIN ISO 8573-1: 7 4 4

Warranty: 24 months (details, general terms and conditions and operating manuals can be downloaded at www.schunk.com)

Scope of delivery: Mount for proximity switch, centering sleeves, O-rings for direct connection, assembly and operating manual with declaration of incorporation.

Gripping force maintenance device: possible with SDV-P pressure maintenance valve

Gripping force: is the arithmetic total of the gripping force applied to each gripper jaw at distance P (see illustration).

Finger length: is measured from the upper edge of the gripper housing in the direction of the main axis. The breach of the max. permitted finger length can bring higher abrasion. The maximum permissible finger length applies up to the nominal operating pressure. With higher pressures, the finger length must be reduced proportionally to the nominal operating pressure.

Repeat accuracy: is defined as the spread of the limit position after 100 consecutive strokes.

Workpiece weight: is calculated for a force-fit connection with a coefficient of friction of 0.1 and a safety factor of 2 against slippage of the workpiece on acceleration due to gravity g. Considerably heavier workpiece weights are permitted with form-fit gripping.

Closing and opening times: are purely the times that the base jaws or fingers are in motion. Valve switching times, hose filling times or PLC reaction times are not included in the above times and must be taken into consideration when determining cycle times.

Application example

Sorting unit for small components which require an especially large gripper stroke due to their variation in size.

1. KGG 2-Finger Parallel Gripper with workpiece-specific fingers
2. KLM Linear Module for vertical movement
3. KLM Linear Module for horizontal movement

SCHUNK offers more ...

The following components make the product KGG even more productive – the suitable addition for the highest functionality, flexibility, reliability, and controlled production.

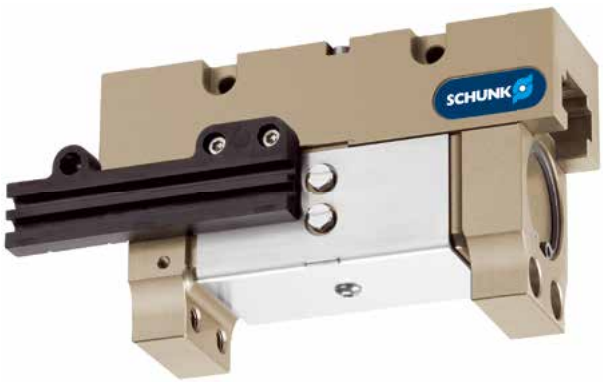

Centering Sleeves

Fittings

Inductive Proximity Switches

Magnetic Switches

Sensor Distributor

Plastic Inserts

Sensor Cables

Carbide Clamping Inserts

Gripper Pads

SDV-P Pressure Maintenance Valve

Finger Blanks

Flexible Position Sensor

ⓘ Further information regarding the products can be found on the following product pages or at www.schunk.com. Please contact us for further information: SCHUNK technical hotline +49-7133-103-2696

Options and special Information

Please note that the weight of the gripper fingers should be as low as possible for long-stroke grippers.

KGG 60

SCHUNK Grippers pneumatic | 2-Finger Parallel Grippers | Small Components Gripper

Gripping force, O.D. gripping

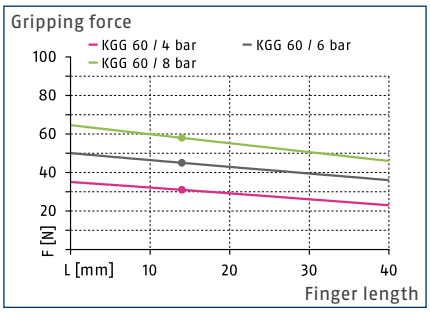

Gripping force, I.D. gripping

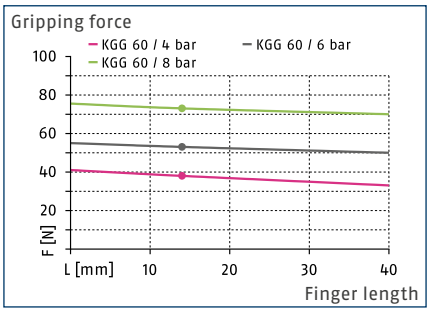

Finger load

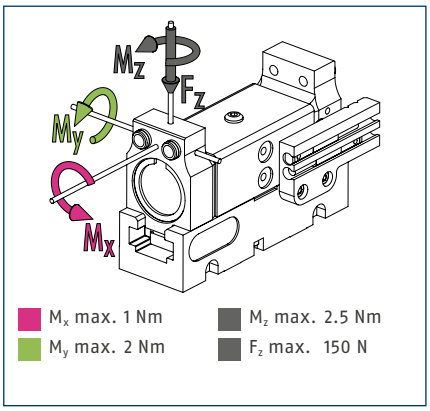

ⓘ The indicated moments and forces are static values, apply per base jaw and may occur simultaneously. M_y may arise in addition to the moment generated by the gripping force itself. If the max. permitted finger weight is exceeded, it is impreative to throttle the air supply so that the jaw movement occurs without any hitting or bouncing. Service life may be reduced.

Technical data

Description		KGG 60-20	KGG 60-40
ID		0303075	0303076
Stroke per jaw	[mm]	10	20
Closing- / opening force	[N]	45/53	45/53
Weight	[kg]	0.09	0.11
Recommended workpiece weight	[kg]	0.23	0.23
Fluid consumption per double stroke	[cm³]	3	6
min. / max. operating pressure	[bar]	2.5/8	2.5/8
Nominal operating pressure	[bar]	6	6
Closing- / opening time	[s]	0.03/0.03	0.04/0.04
max. permitted finger length	[mm]	42	42
max. permitted weight per finger	[kg]	0.04	0.04
IP class		40	40
min. / max. ambient temperature	[°C]	5/90	5/90
Repeat accuracy	[mm]	0.02	0.02

ⓘ Requirements on the levelness of the bolting surface (in relation to the entire bolting surface for the gripper):
- < 0.02 mm with an edge length of up to 100 mm
- < 0.05 mm with an edge length of 100 mm or longer

Main view

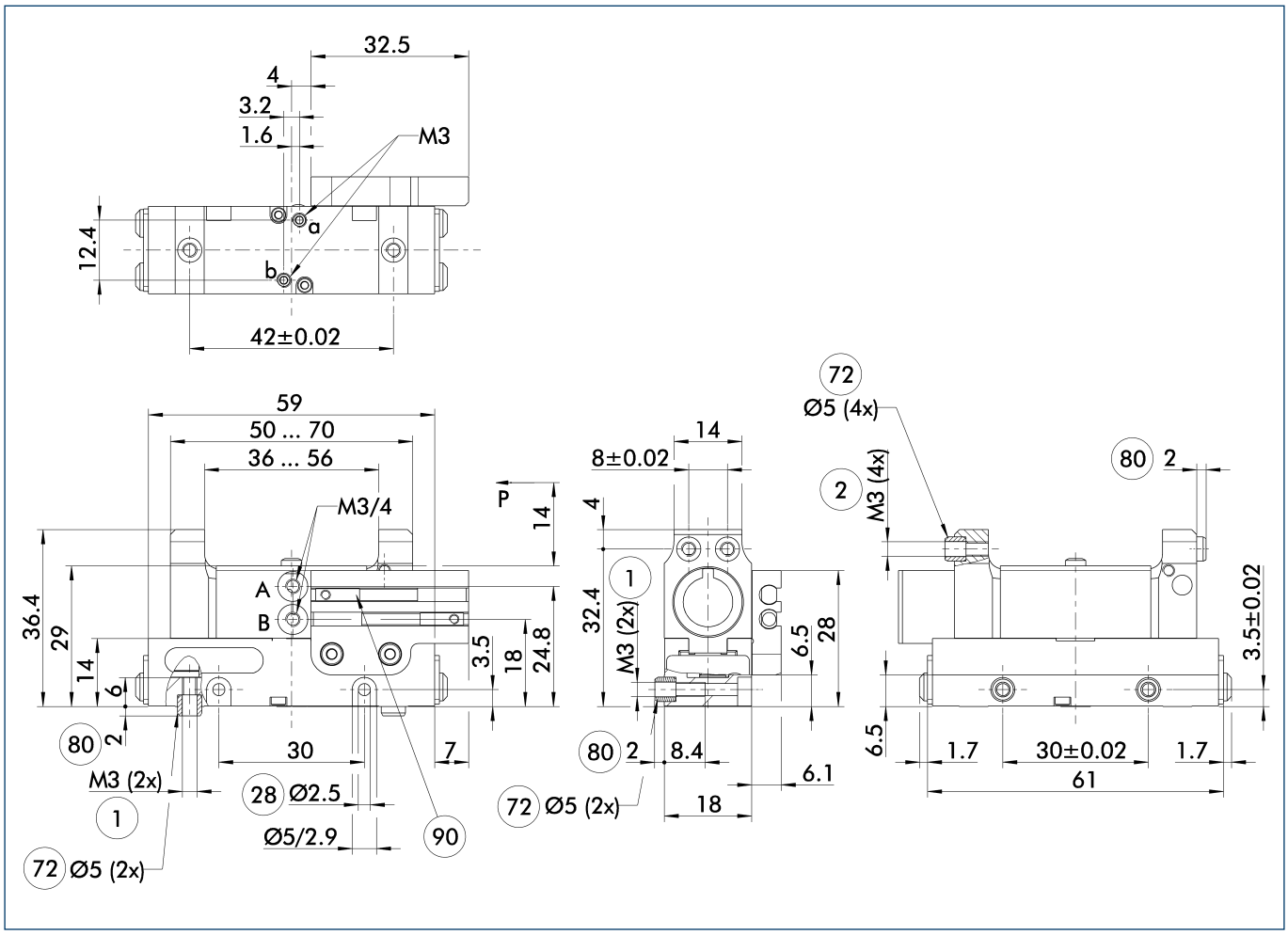

The drawing shows the gripper in the basic version with closed jaws, without dimensional consideration of the options described below.

ⓘ The SDV-P pressure maintenance valve can be used as a gripping force maintenance device (see catalog section on "Accessories").

A, a Main / direct connection, gripper opening

B, b Main / direct connection, gripper closing

(1) Gripper connection

(2) Finger connection

(28) Through-bore

(72) Fit for centering sleeves

(80) Depth of the centering sleeve hole in the mating part

(90) MMS 22... sensor

Maximum permitted finger projection

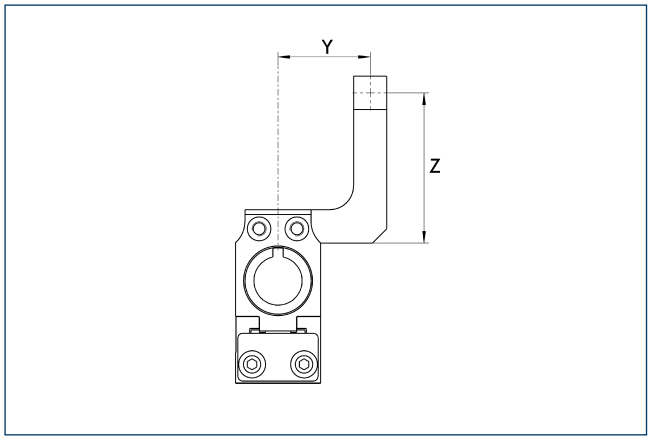

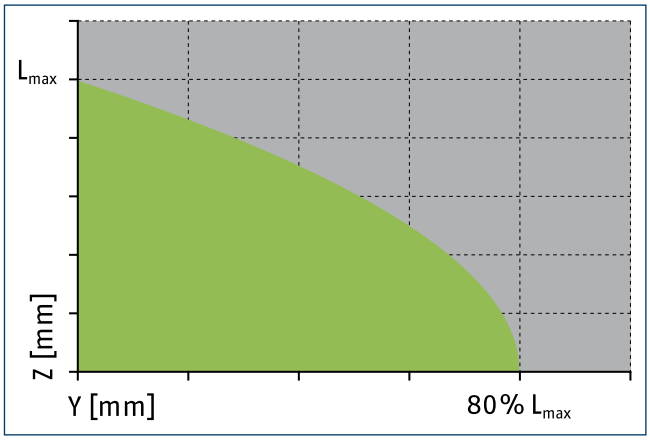

Permitted range

Inadmissible range

L_{max} is equivalent to the maximum permitted finger length, see the chart of technical specifications.

Hose-free direct connection M3

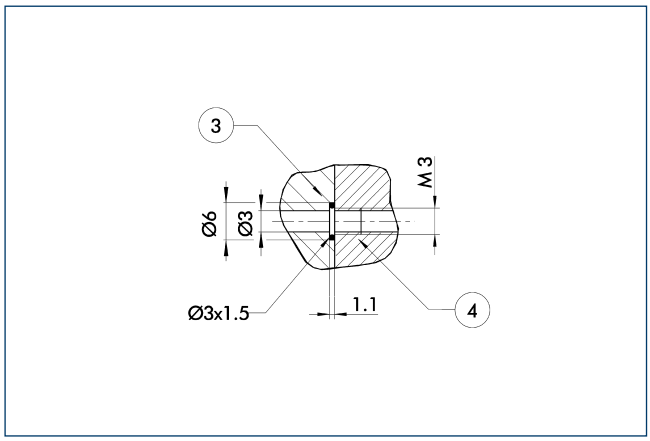

(3) Adapter (4) Gripper

The direct connection is used for supplying compressed air without hoses. Instead, the pressure medium is fed through bore-holes in the mounting plate.

Stroke versions

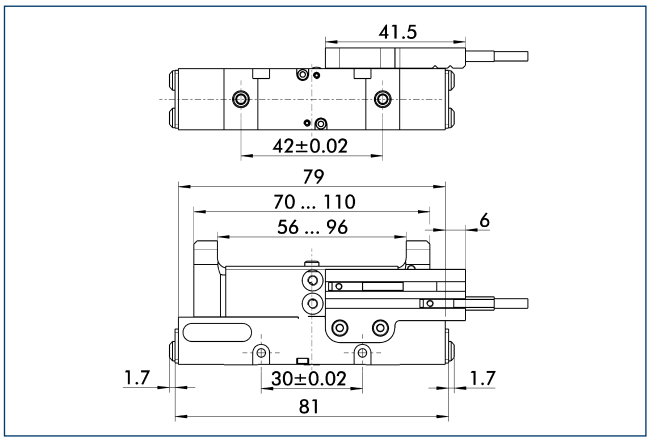

The drawing shows changes in dimensions of the versions with a differing stroke compared to the main view of the shown version.

Jaw design O.D. gripping

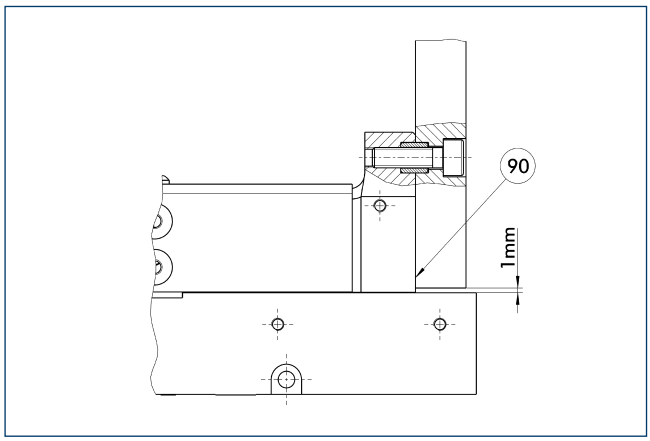

(90) Support top jaws at the base jaw

Jaw design I.D. gripping

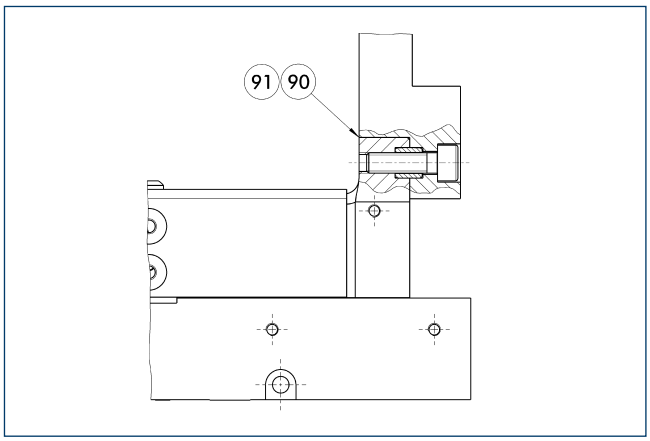

(90) Support top jaws at the base jaw

(91) For dimensions of steps at the top jaw see drawings of finger blanks

SDV-P pressure maintenance valve

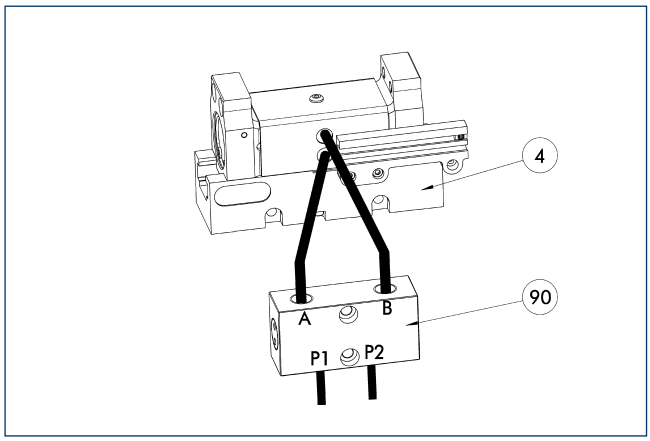

(4) Gripper
(90) SDV-P pressure maintenance valve

The SDV-P pressure maintenance valves ensure that the pressure in the piston chamber of pneumatic gripping, rotary, linear, and quick-change modules is maintained temporarily during an emergency stop.

Description	ID	
Pressure maintenance valve		
SDV-P 04	0403130	

RB 60 finger blanks

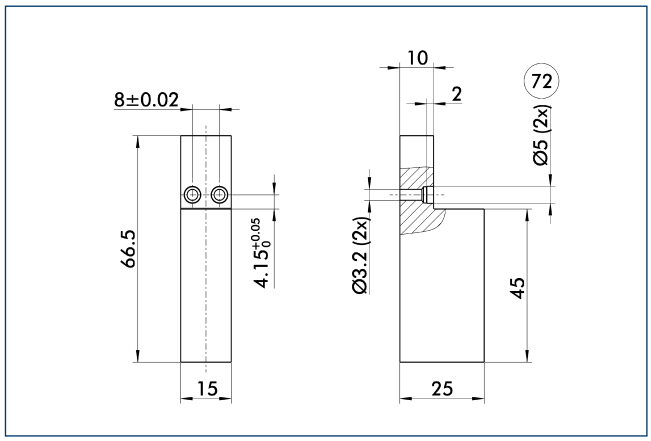

(72) Fit for centering sleeves

Finger blanks for customized subsequent machining.

Description	ID	Material	Scope of delivery
Finger blanks			
RB 60	0303087	Aluminum	2

Modular assembly automation

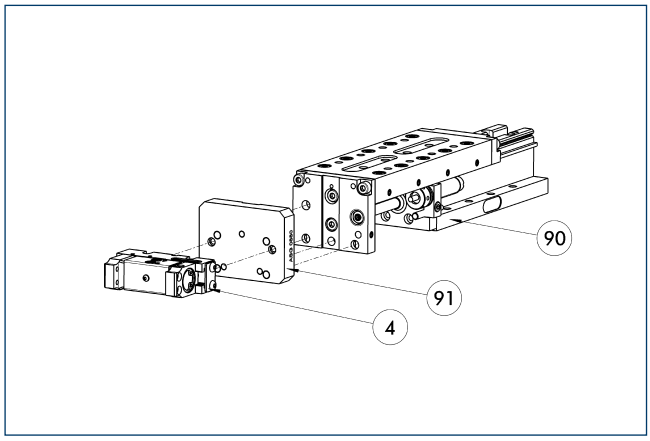

(4) Gripper
(91) ASG adapter plate
(90) CLM / KLM / LM / ELM / ELS / HLM linear module

Gripper and linear modules can be combined with standard adapters out of the modular assembly system. For more information see our catalog "Modular Assembly Automation".

Mounting kit for proximity switch

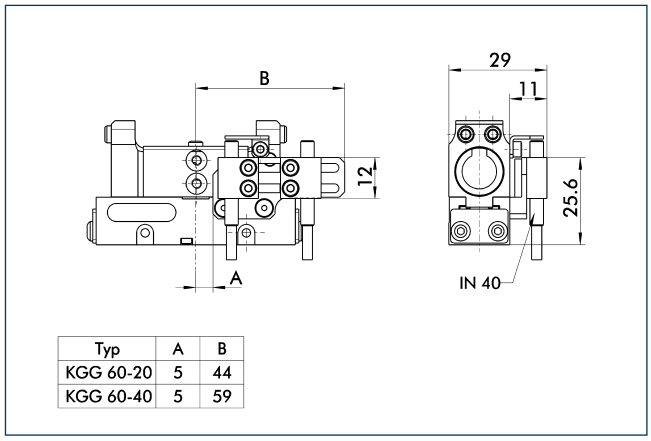

Typ	A	B
KGG 60-20	5	44
KGG 60-40	5	59

The mounting kit comprises mount, switching lug / cam and mounting screws. Proximity switches must be ordered separately.

Description	ID	
Mounting kit for proximity switch		
AS-KGG 60-20 / 70-24	0303081	
AS-KGG 60-40 / 70-48	0303080	

ⓘ This mounting kit needs to be ordered optionally as an accessory.

Inductive proximity switches

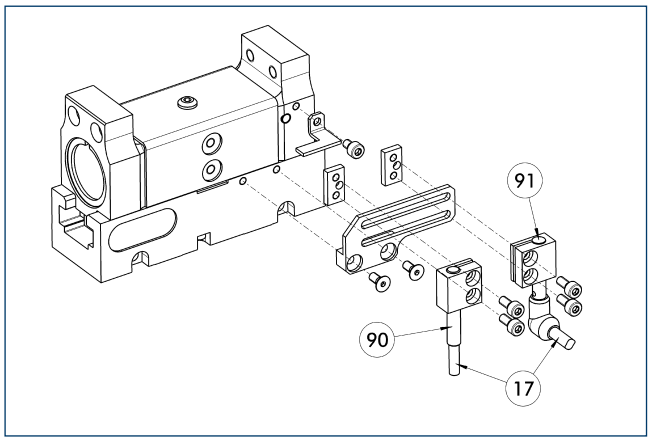

(17) Cable outlet
(91) IN ...-SA sensor
(90) IN ... sensor

Limit position monitor can be mounted with mounting kit.

Description	ID	Often combined
Mounting kit for proximity switch		
AS-KGG 60-20 / 70-24	0303081	
AS-KGG 60-40 / 70-48	0303080	
Inductive proximity switches		
IN 40-S-M12	0301574	
IN 40-S-M8	0301474	●
INK 40-S	0301555	
Inductive proximity switches with lateral outlet		
IN 40-S-M12-SA	0301577	
IN 40-S-M8-SA	0301473	●
INK 40-S-SA	0301565	
Cable extensions		
KV BG12-SG12 3P-0030-PNP	0301999	
KV BG12-SG12 3P-0060-PNP	0301998	
KV BW08-SG08 3P-0030-PNP	0301495	
KV BW08-SG08 3P-0100-PNP	0301496	
KV BW08-SG08 3P-0200-PNP	0301497	●
KV BW12-SG12 3P-0030-PNP	0301595	
KV BW12-SG12 3P-0100-PNP	0301596	
KV BW12-SG12 3P-0200-PNP	0301597	
Clip for plug / socket		
CLI-M12	0301464	
CLI-M8	0301463	
Connection cables		
KA BG08-L 3P-0300-PNP	0301622	●
KA BG08-L 3P-0500-PNP	0301623	
KA BG12-L 3P-0500-PNP	30016369	
KA BW08-L 3P-0300-PNP	0301594	
KA BW08-L 3P-0500-PNP	0301502	
KA BW12-L 3P-0300-PNP	0301503	
KA BW12-L 3P-0500-PNP	0301507	
Sensor distributor		
V2-M12	0301776	●

ⓘ Two sensors (closer/S) are required for each unit, plus extension cables as an option. This mounting kit needs to be ordered optionally as an accessory. Please note the minimum permitted bending radii for the sensor cables, which are generally 35 mm.

MMS electronic magnetic switches

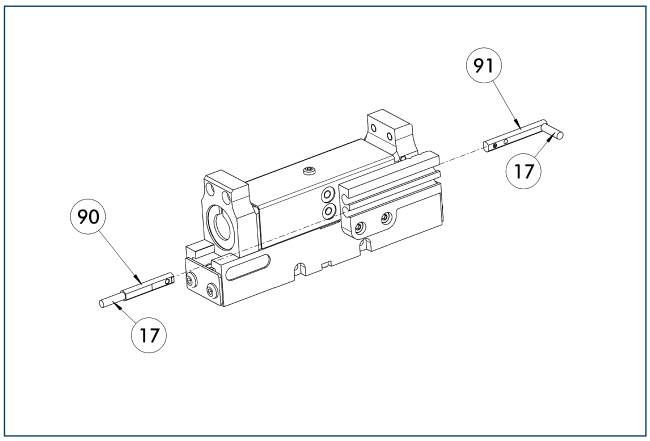

(17) Cable outlet
(91) MMS 22...-SA sensor
(90) MMS 22... sensor

End position monitoring for mounting in the C-slot.

Description	ID	Often combined
MMS electronic magnetic switches		
MMS 22-S-M8-PNP	0301032	●
MMSK 22-S-PNP	0301034	
MMS electronic magnetic switches with lateral cable outlet		
MMS 22-S-M8-PNP-SA	0301042	●
MMSK 22-S-PNP-SA	0301044	
Reed switches		
RMS 22-S-M8	0377720	●
Cable extensions		
KV BW08-SG08 3P-0030-PNP	0301495	
KV BW08-SG08 3P-0100-PNP	0301496	
KV BW08-SG08 3P-0200-PNP	0301497	●
Clip for plug / socket		
CLI-M8	0301463	
Connection cables		
KA BG08-L 3P-0300-PNP	0301622	●
KA BG08-L 3P-0500-PNP	0301623	
KA BW08-L 3P-0300-PNP	0301594	
KA BW08-L 3P-0500-PNP	0301502	
RSS radio sensor system		
RSS-T2	0377710	
Sensor distributor		
V2-M8	0301775	●
V4-M8	0301746	
V8-M8	0301751	

ⓘ Two sensors (closer/S) are required for each unit, plus extension cables as an option. Please note the minimum permitted bending radii for the sensor cables, which are generally 35 mm.

MMS PI1 programmable magnetic switches

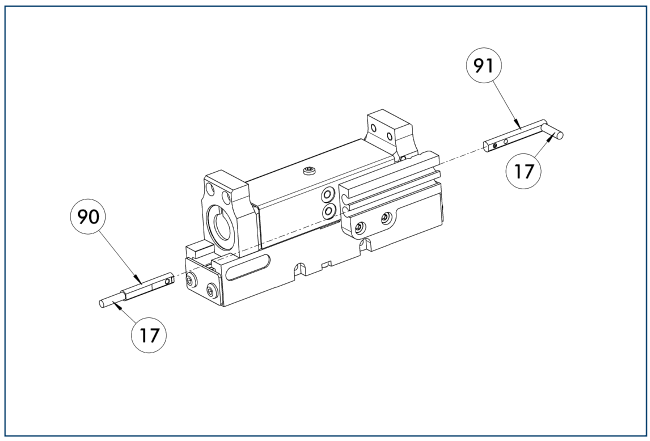

(17) Cable outlet
(91) MMS 22...-PI1-...-SA sensor
(90) MMS 22...-PI1-... sensor

Position query with one programmable position per sensor and electronics integrated in sensor. Programmable via MT magnet teaching tool (included in the scope of delivery) or ST plug teaching tool (optional). Limit position query mounted in C-groove. If the ST plug teaching tools are listed in the table, teaching can only take place with the ST plug teaching tools.

Description	ID	Often combined
MMS PI1 programmable magnetic switches		
MMS 22-PI1-S-M8-PNP	0301160	●
MMSK 22-PI1-S-PNP	0301162	
MMS PI1-HD programmable magnetic switches with stainless steel housing		
MMS 22-PI1-S-M8-PNP-HD	0301110	●
MMSK 22-PI1-S-PNP-HD	0301112	
MMS PI1 programmable magnetic switches with lateral cable outlet		
MMS 22-PI1-S-M8-PNP-SA	0301166	●
MMSK 22-PI1-S-PNP-SA	0301168	

ⓘ Two sensors (closer/S) are required for each unit, plus extension cables as an option. Please note the minimum permitted bending radii for the sensor cables, which are generally 35 mm. Connection cable, cable extensions, and sensor distributors can be found in the table for the MMS 22.

MMS PI2 programmable magnetic switches

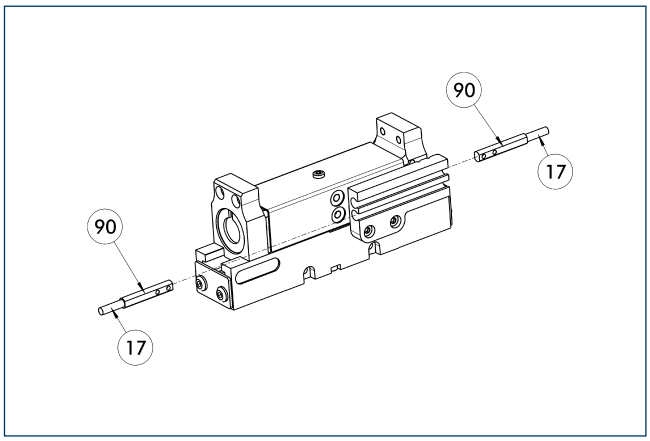

(17) Cable outlet
(90) MMS 22...-PI2-... sensor

Position query with two programmable positions per sensor and electronics integrated in sensor. Programmable via MT magnet teaching tool (included in the scope of delivery) or ST plug teaching tool (optional). Limit position query mounted in C-groove. If the ST plug teaching tools are listed in the table, teaching can only take place with the ST plug teaching tools.

Description	ID	Often combined
MMS PI2 programmable magnetic switches		
MMS 22-PI2-S-M8-PNP	0301180	●
MMSK 22-PI2-S-PNP	0301182	
MMS PI2-HD programmable magnetic switches with stainless steel housing		
MMS 22-PI2-S-M8-PNP-HD	0301130	●
MMSK 22-PI2-S-PNP-HD	0301132	

ⓘ Per unit one sensor (closer/NO) is required, optionally a cable extension. Please note the minimum permitted bending radii for the sensor cables, which are generally 35 mm. With the KGG-series, the MMS-P could just cover the whole stroke range of KGG 60-20 / 70-24 / 80-30.

MMS-P programmable magnetic switches

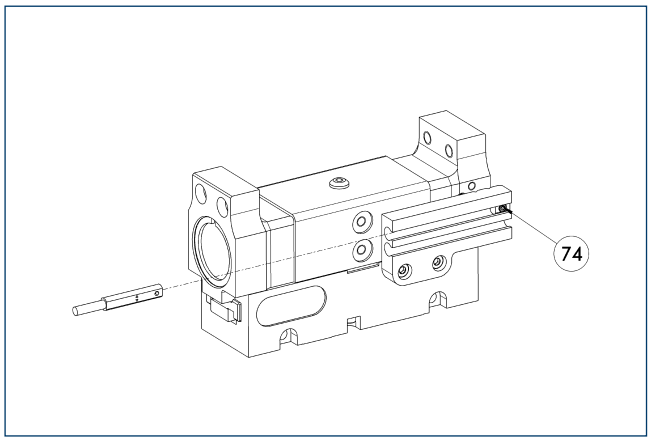

74 Stop for MMS-P

Position monitoring with two programmable positions per sensor. The end position monitoring is mounted in the C-slot.

Description	ID	Often combined
MMS-P programmable magnetic switches		
MMSK-P 22-S-PNP	0301371	
MMS-P 22-S-M8-PNP	0301370	●
Clip for plug / socket		
CLI-M8	0301463	
Connection cables		
KA BG08-L 4P-0500	0307767	●
KA BG08-L 4P-1000	0307768	
KA BW08-L 4P-0500	0307765	
KA BW08-L 4P-1000	0307766	
Sensor distributor		
V2-M8-4P-2XM8-3P	0301380	

ⓘ Per unit one sensor (closer/NO) is required, optionally a cable extension. Please note the minimum permitted bending radii for the sensor cables, which are generally 35 mm. With the KGG-series, the MMS-P could just cover the whole stroke range of KGG 60-20 / 70-24 / 80-30.

KGG 70

SCHUNK Grippers pneumatic | 2-Finger Parallel Grippers | Small Components Gripper

Gripping force, O.D. gripping

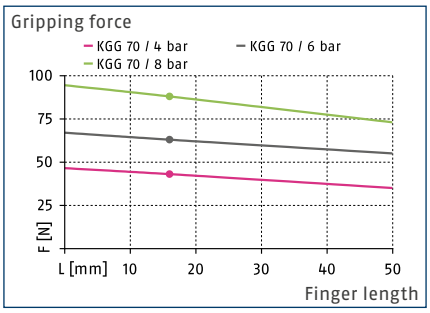

Gripping force, I.D. gripping

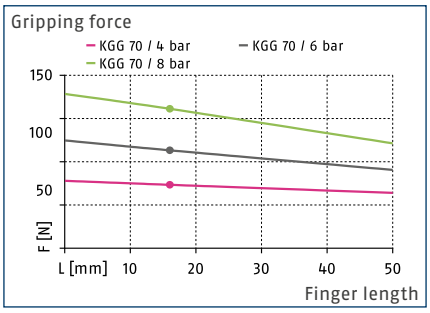

Finger load

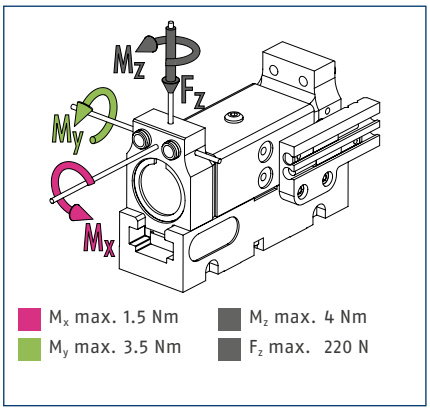

ⓘ The indicated moments and forces are static values, apply per base jaw and may occur simultaneously. M_y may arise in addition to the moment generated by the gripping force itself. If the max. permitted finger weight is exceeded, it is impreative to throttle the air supply so that the jaw movement occurs without any hitting or bouncing. Service life may be reduced.

Technical data

Description		KGG 70-24	KGG 70-48
ID		0303055	0303056
Stroke per jaw	[mm]	12	24
Closing- / opening force	[N]	62/85	62/85
Weight	[kg]	0.15	0.19
Recommended workpiece weight	[kg]	0.32	0.32
Fluid consumption per double stroke	[cm³]	5	10
min. / max. operating pressure	[bar]	2.5/8	2.5/8
Nominal operating pressure	[bar]	6	6
Closing- / opening time	[s]	0.04/0.04	0.05/0.05
max. permitted finger length	[mm]	50	50
max. permitted weight per finger	[kg]	0.06	0.06
IP class		40	40
min. / max. ambient temperature	[°C]	5/90	5/90
Repeat accuracy	[mm]	0.02	0.02

ⓘ Requirements on the levelness of the bolting surface (in relation to the entire bolting surface for the gripper):
- < 0.02 mm with an edge length of up to 100 mm
- < 0.05 mm with an edge length of 100 mm or longer

Main view

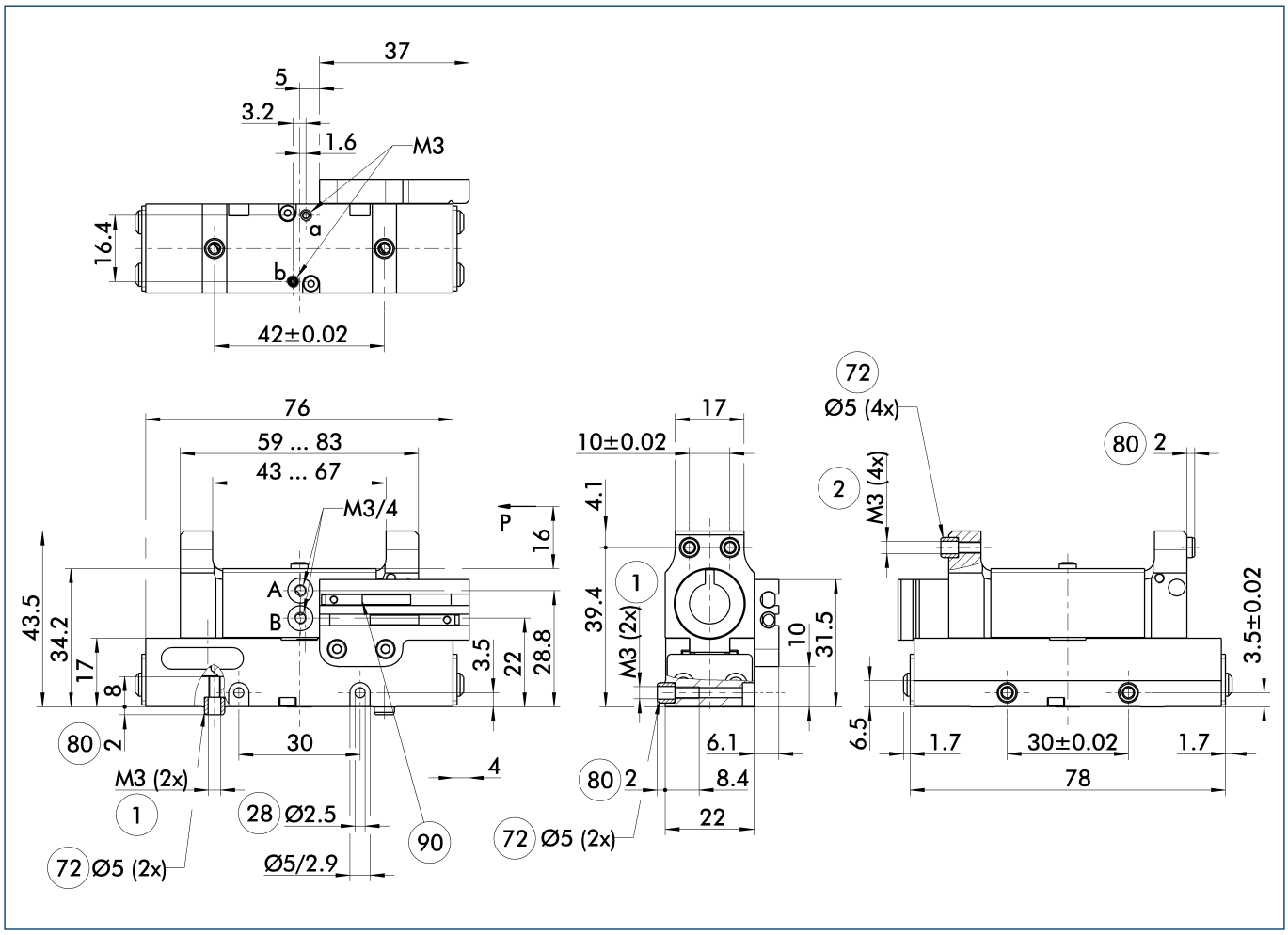

The drawing shows the gripper in the basic version with closed jaws, without dimensional consideration of the options described below.

ⓘ The SDV-P pressure maintenance valve can be used as a gripping force maintenance device (see catalog section on "Accessories").

A, a Main / direct connection, gripper opening

B, b Main / direct connection, gripper closing

(1) Gripper connection

(2) Finger connection

(28) Through-bore

(72) Fit for centering sleeves

(80) Depth of the centering sleeve hole in the mating part

(90) MMS 22... sensor

Maximum permitted finger projection

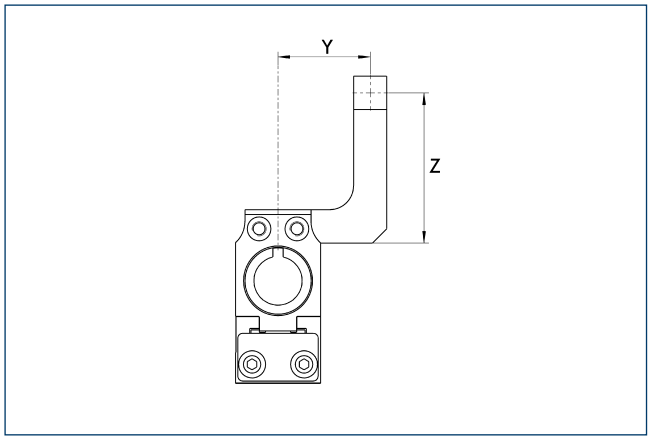

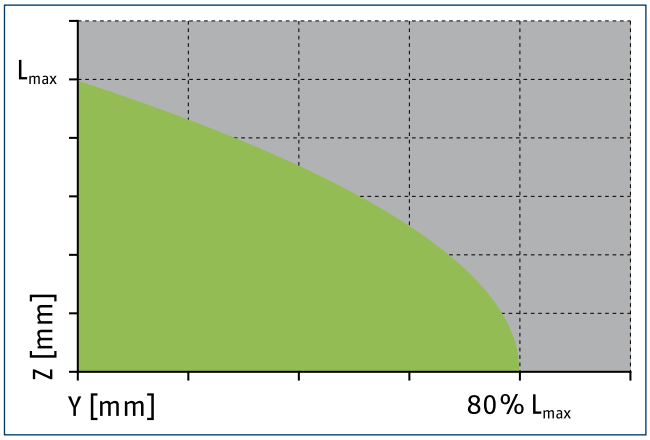

Permitted range

Inadmissible range

L_{max} is equivalent to the maximum permitted finger length, see the chart of technical specifications.

Hose-free direct connection M3

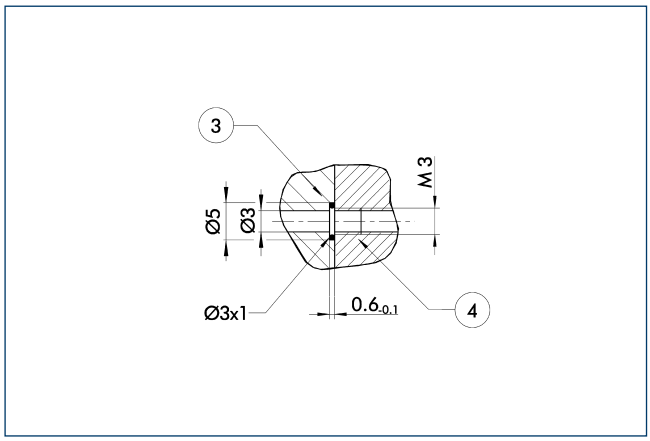

(3) Adapter (4) Gripper

The direct connection is used for supplying compressed air without hoses. Instead, the pressure medium is fed through bore-holes in the mounting plate.

Stroke versions

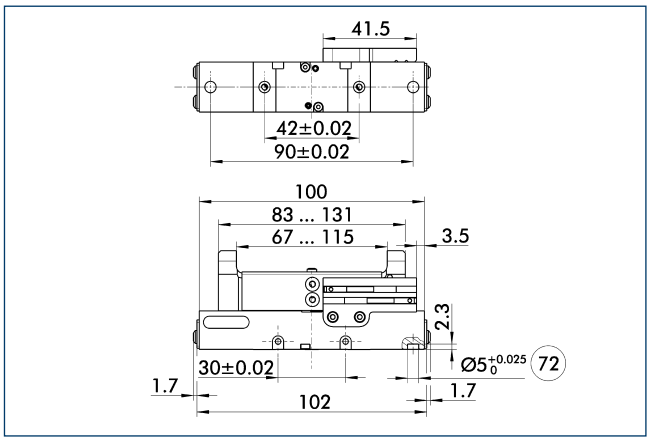

(72) Fit for centering sleeves

The drawing shows changes in dimensions of the versions with a differing stroke compared to the main view of the shown version.

Jaw design O.D. gripping

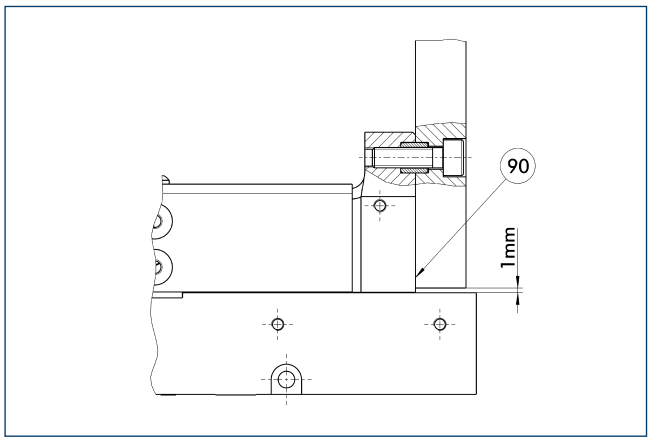

(90) Support top jaws at the base jaw

Jaw design I.D. gripping

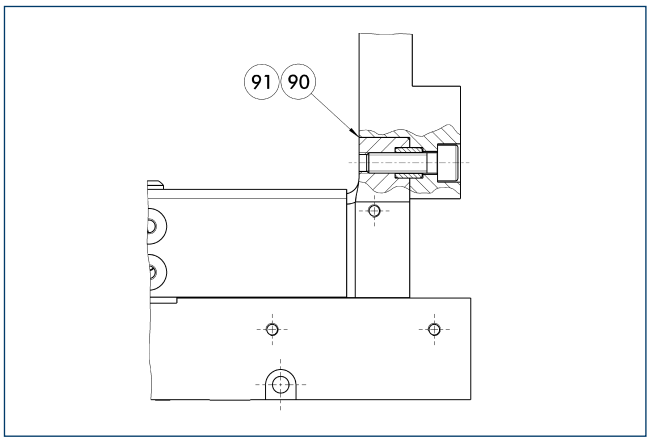

(90) Support top jaws at the base jaw

(91) For dimensions of steps at the top jaw see drawings of finger blanks

SDV-P pressure maintenance valve

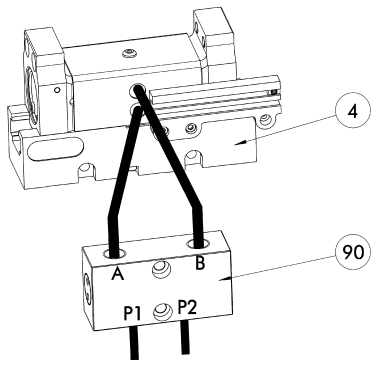

(4) Gripper
(90) SDV-P pressure maintenance valve

The SDV-P pressure maintenance valves ensure that the pressure in the piston chamber of pneumatic gripping, rotary, linear, and quick-change modules is maintained temporarily during an emergency stop.

Description	ID	
Pressure maintenance valve		
SDV-P 04	0403130	

RB 70 finger blanks

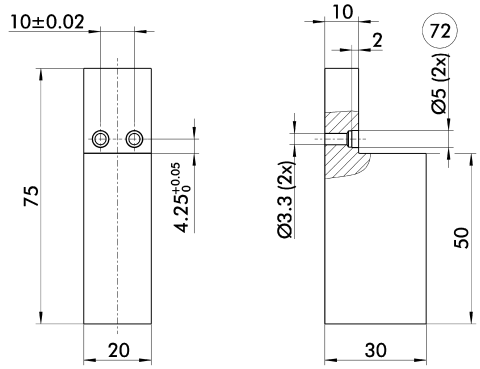

(72) Fit for centering sleeves

Finger blanks for customized subsequent machining.

Description	ID	Material	Scope of delivery
Finger blanks			
RB 70	0303088	Aluminum	2

Modular assembly automation

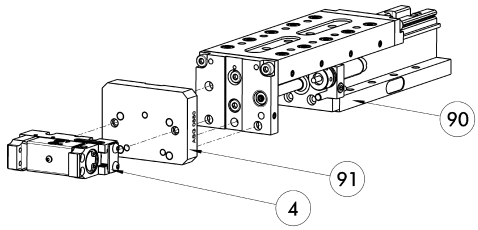

(4) Gripper
(91) ASG adapter plate
(90) CLM / KLM / LM / ELM / ELS / HLM linear module

Gripper and linear modules can be combined with standard adapters out of the modular assembly system. For more information see our catalog "Modular Assembly Automation".

Mounting kit for proximity switch

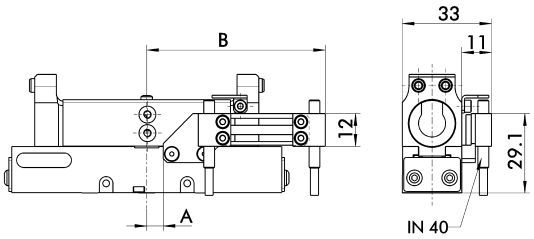

Typ	A	B
KGG 70-24	6	45
KGG 70-48	6	66

Limit position monitor can be mounted with mounting kit.

Description	ID	
Mounting kit for proximity switch		
AS-KGG 60-20 / 70-24	0303081	
AS-KGG 60-40 / 70-48	0303080	

ⓘ This mounting kit needs to be ordered optionally as an accessory.

Inductive proximity switches

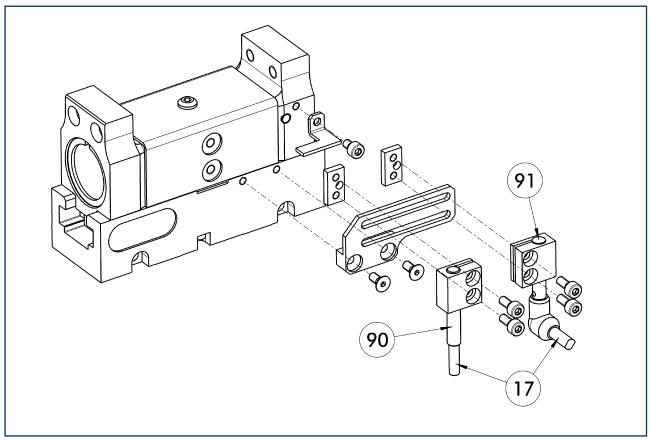

(17) Cable outlet
(91) IN ...-SA sensor
(90) IN ... sensor

Limit position monitor can be mounted with mounting kit.

Description	ID	Often combined
Mounting kit for proximity switch		
AS-KGG 60-20 / 70-24	0303081	
AS-KGG 60-40 / 70-48	0303080	
Inductive proximity switches		
IN 40-S-M12	0301574	
IN 40-S-M8	0301474	●
INK 40-S	0301555	
Inductive proximity switches with lateral outlet		
IN 40-S-M12-SA	0301577	
IN 40-S-M8-SA	0301473	●
INK 40-S-SA	0301565	
Cable extensions		
KV BG12-SG12 3P-0030-PNP	0301999	
KV BG12-SG12 3P-0060-PNP	0301998	
KV BW08-SG08 3P-0030-PNP	0301495	
KV BW08-SG08 3P-0100-PNP	0301496	
KV BW08-SG08 3P-0200-PNP	0301497	●
KV BW12-SG12 3P-0030-PNP	0301595	
KV BW12-SG12 3P-0100-PNP	0301596	
KV BW12-SG12 3P-0200-PNP	0301597	
Clip for plug / socket		
CLI-M12	0301464	
CLI-M8	0301463	
Connection cables		
KA BG08-L 3P-0300-PNP	0301622	●
KA BG08-L 3P-0500-PNP	0301623	
KA BG12-L 3P-0500-PNP	30016369	
KA BW08-L 3P-0300-PNP	0301594	
KA BW08-L 3P-0500-PNP	0301502	
KA BW12-L 3P-0300-PNP	0301503	
KA BW12-L 3P-0500-PNP	0301507	
Sensor distributor		
V2-M12	0301776	●

ⓘ Two sensors (closer/S) are required for each unit, plus extension cables as an option. This mounting kit needs to be ordered optionally as an accessory. Please note the minimum permitted bending radii for the sensor cables, which are generally 35 mm.

MMS electronic magnetic switches

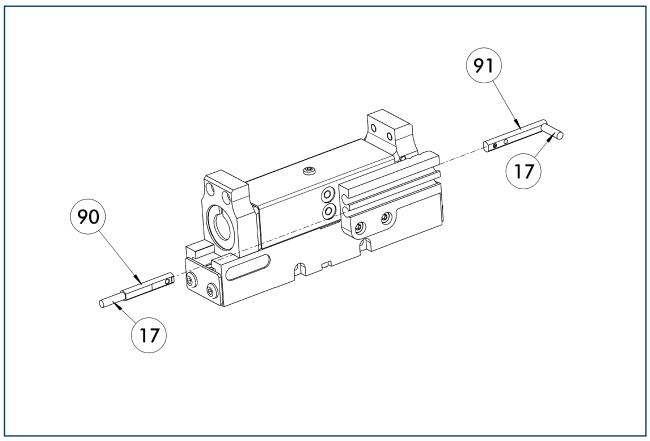

(17) Cable outlet
(91) MMS 22...-SA sensor
(90) MMS 22... sensor

End position monitoring for mounting in the C-slot.

Description	ID	Often combined
MMS electronic magnetic switches		
MMS 22-S-M8-PNP	0301032	●
MMSK 22-S-PNP	0301034	
MMS electronic magnetic switches with lateral cable outlet		
MMS 22-S-M8-PNP-SA	0301042	●
MMSK 22-S-PNP-SA	0301044	
Reed switches		
RMS 22-S-M8	0377720	●
Cable extensions		
KV BW08-SG08 3P-0030-PNP	0301495	
KV BW08-SG08 3P-0100-PNP	0301496	
KV BW08-SG08 3P-0200-PNP	0301497	●
Clip for plug / socket		
CLI-M8	0301463	
Connection cables		
KA BG08-L 3P-0300-PNP	0301622	●
KA BG08-L 3P-0500-PNP	0301623	
KA BW08-L 3P-0300-PNP	0301594	
KA BW08-L 3P-0500-PNP	0301502	
RSS radio sensor system		
RSS-T2	0377710	
Sensor distributor		
V2-M8	0301775	●
V4-M8	0301746	
V8-M8	0301751	

ⓘ Two sensors (closer/S) are required for each unit, plus extension cables as an option. Please note the minimum permitted bending radii for the sensor cables, which are generally 35 mm.

MMS PI1 programmable magnetic switches

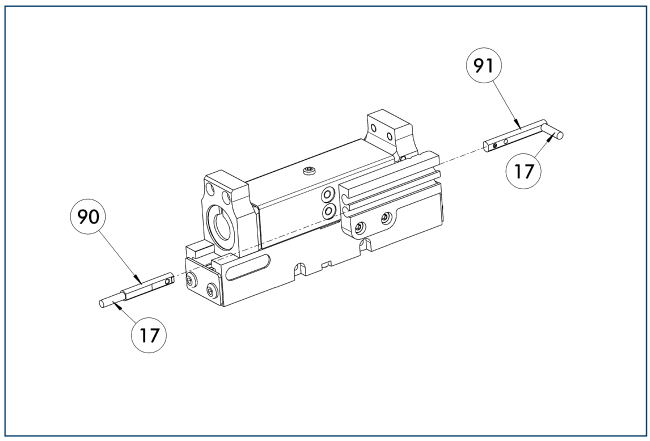

(17) Cable outlet
(91) MMS 22...-PI1-...-SA sensor
(90) MMS 22...-PI1-... sensor

Position query with one programmable position per sensor and electronics integrated in sensor. Programmable via MT magnet teaching tool (included in the scope of delivery) or ST plug teaching tool (optional). Limit position query mounted in C-groove. If the ST plug teaching tools are listed in the table, teaching can only take place with the ST plug teaching tools.

Description	ID	Often combined
MMS PI1 programmable magnetic switches		
MMS 22-PI1-S-M8-PNP	0301160	●
MMSK 22-PI1-S-PNP	0301162	
MMS PI1-HD programmable magnetic switches with stainless steel housing		
MMS 22-PI1-S-M8-PNP-HD	0301110	●
MMSK 22-PI1-S-PNP-HD	0301112	
MMS PI1 programmable magnetic switches with lateral cable outlet		
MMS 22-PI1-S-M8-PNP-SA	0301166	●
MMSK 22-PI1-S-PNP-SA	0301168	

ⓘ Two sensors (closer/S) are required for each unit, plus extension cables as an option. Please note the minimum permitted bending radii for the sensor cables, which are generally 35 mm. Connection cable, cable extensions, and sensor distributors can be found in the table for the MMS 22.

MMS PI2 programmable magnetic switches

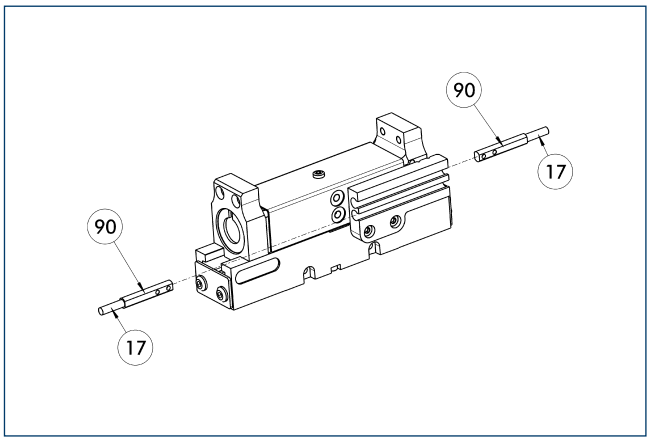

(17) Cable outlet
(90) MMS 22...-PI2-... sensor

Position query with two programmable positions per sensor and electronics integrated in sensor. Programmable via MT magnet teaching tool (included in the scope of delivery) or ST plug teaching tool (optional). Limit position query mounted in C-groove. If the ST plug teaching tools are listed in the table, teaching can only take place with the ST plug teaching tools.

Description	ID	Often combined
MMS PI2 programmable magnetic switches		
MMS 22-PI2-S-M8-PNP	0301180	●
MMSK 22-PI2-S-PNP	0301182	
MMS PI2-HD programmable magnetic switches with stainless steel housing		
MMS 22-PI2-S-M8-PNP-HD	0301130	●
MMSK 22-PI2-S-PNP-HD	0301132	

ⓘ Per unit one sensor (closer/NO) is required, optionally a cable extension. Please note the minimum permitted bending radii for the sensor cables, which are generally 35 mm. With the KGG-series, the MMS-P could just cover the whole stroke range of KGG 60-20 / 70-24 / 80-30.

MMS-P programmable magnetic switches

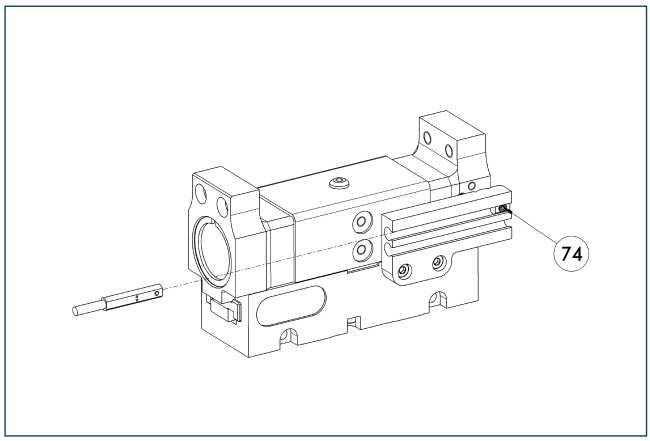

74 Stop for MMS-P

Position monitoring with two programmable positions per sensor. The end position monitoring is mounted in the C-slot.

Description	ID	Often combined
MMS-P programmable magnetic switches		
MMSK-P 22-S-PNP	0301371	
MMS-P 22-S-M8-PNP	0301370	●
Clip for plug / socket		
CLI-M8	0301463	
Connection cables		
KA BG08-L 4P-0500	0307767	●
KA BG08-L 4P-1000	0307768	
KA BW08-L 4P-0500	0307765	
KA BW08-L 4P-1000	0307766	
Sensor distributor		
V2-M8-4P-2XM8-3P	0301380	

ⓘ Per unit one sensor (closer/NO) is required, optionally a cable extension. Please note the minimum permitted bending radii for the sensor cables, which are generally 35 mm. With the KGG-series, the MMS-P could just cover the whole stroke range of KGG 60-20 / 70-24 / 80-30.

KGG 80

SCHUNK Grippers pneumatic | 2-Finger Parallel Grippers | Small Components Gripper

Gripping force, O.D. gripping

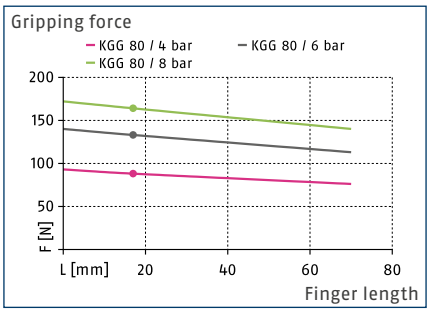

Gripping force, I.D. gripping

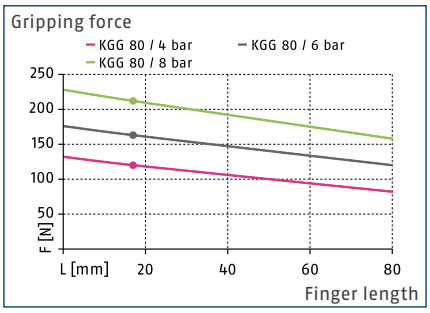

Finger load

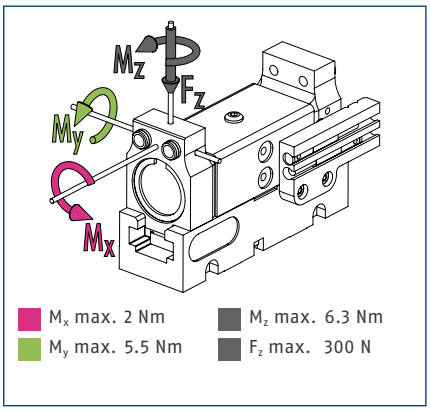

ⓘ The indicated moments and forces are static values, apply per base jaw and may occur simultaneously. M_y may arise in addition to the moment generated by the gripping force itself. If the max. permitted finger weight is exceeded, it is impreative to throttle the air supply so that the jaw movement occurs without any hitting or bouncing. Service life may be reduced.

Technical data

Description		KGG 80-30	KGG 80-60
ID		0303060	0303061
Stroke per jaw	[mm]	15	30
Closing- / opening force	[N]	130/165	130/165
Weight	[kg]	0.25	0.33
Recommended workpiece weight	[kg]	0.66	0.66
Fluid consumption per double stroke	[cm³]	12	24
min. / max. operating pressure	[bar]	2.5/8	2.5/8
Nominal operating pressure	[bar]	6	6
Closing- / opening time	[s]	0.05/0.05	0.08/0.07
max. permitted finger length	[mm]	80	80
max. permitted weight per finger	[kg]	0.15	0.15
IP class		40	40
min. / max. ambient temperature	[°C]	5/90	5/90
Repeat accuracy	[mm]	0.02	0.02

ⓘ Requirements on the levelness of the bolting surface (in relation to the entire bolting surface for the gripper):
- < 0.02 mm with an edge length of up to 100 mm
- < 0.05 mm with an edge length of 100 mm or longer

Main view

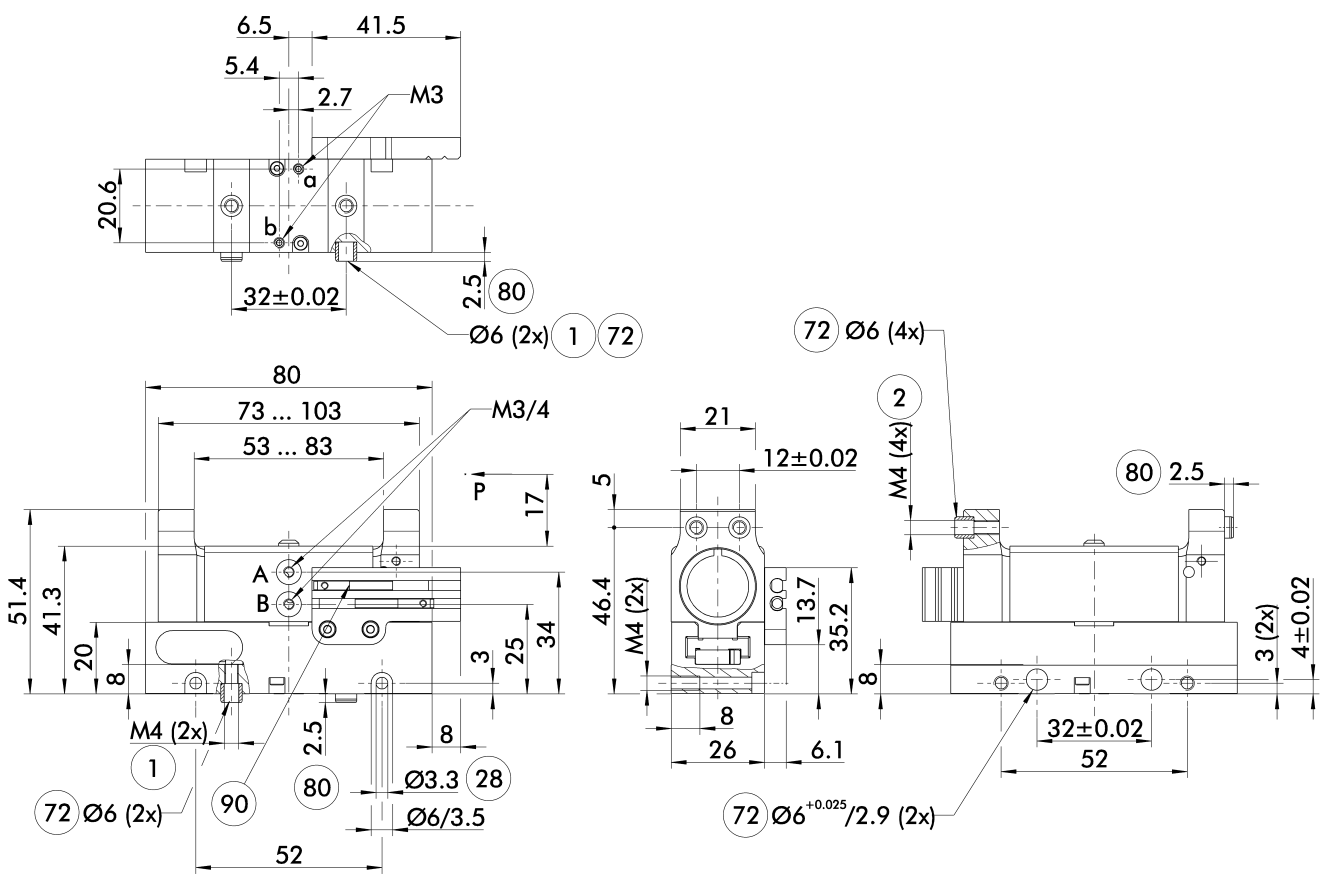

The drawing shows the gripper in the basic version with closed jaws, without dimensional consideration of the options described below.

ⓘ The SDV-P pressure maintenance valve can be used as a gripping force maintenance device (see catalog section on "Accessories").

A, a Main / direct connection, gripper opening

B, b Main / direct connection, gripper closing

(1) Gripper connection

(2) Finger connection

(28) Through-bore

(72) Fit for centering sleeves

(80) Depth of the centering sleeve hole in the mating part

(90) MMS 22... sensor

Maximum permitted finger projection

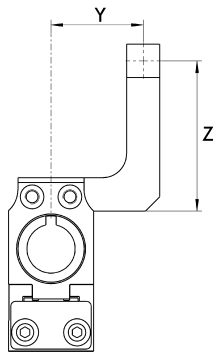

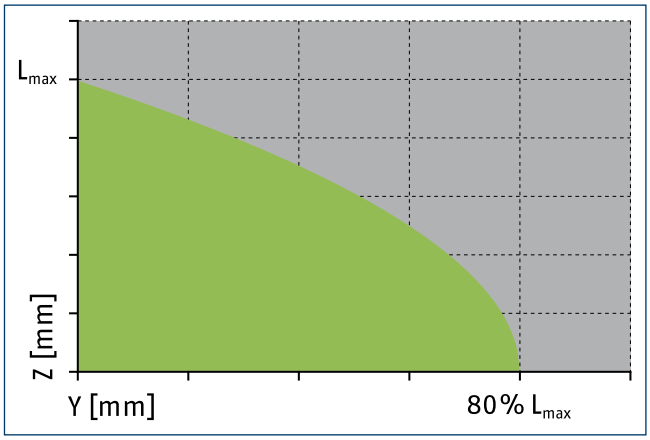

Permitted range

Inadmissible range

L_{max} is equivalent to the maximum permitted finger length, see the chart of technical specifications.

Hose-free direct connection M3

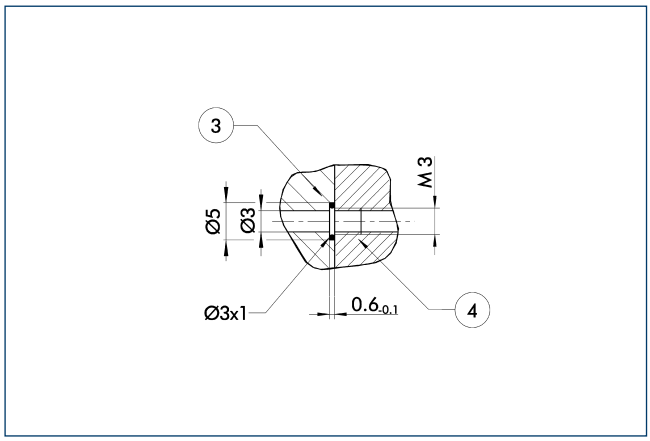

(3) Adapter (4) Gripper

The direct connection is used for supplying compressed air without hoses. Instead, the pressure medium is fed through bore-holes in the mounting plate.

Stroke versions

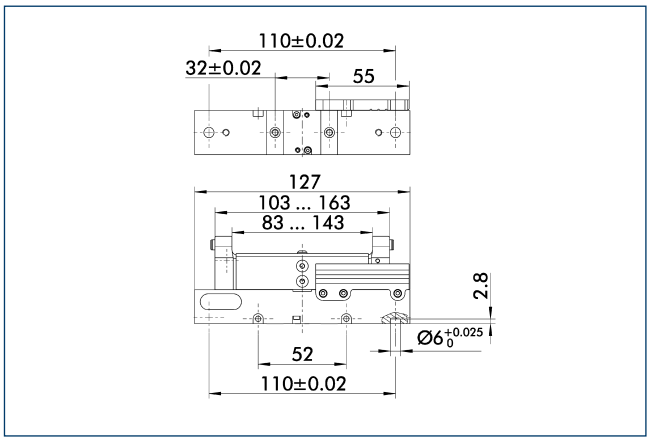

(72) Fit for centering sleeves

The drawing shows changes in dimensions of the versions with a differing stroke compared to the main view of the shown version.

Jaw design O.D. gripping

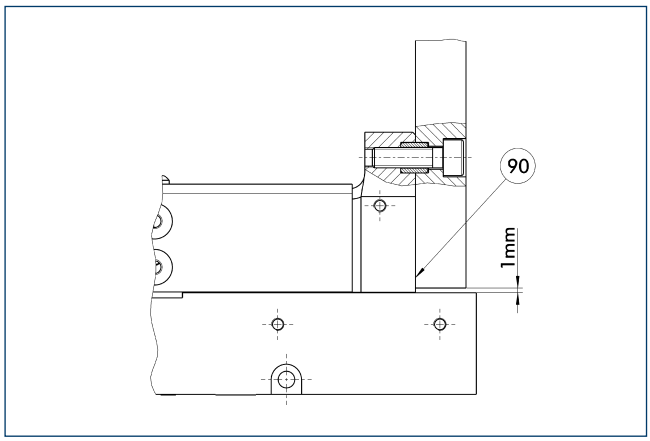

(90) Support top jaws at the base jaw

Jaw design I.D. gripping

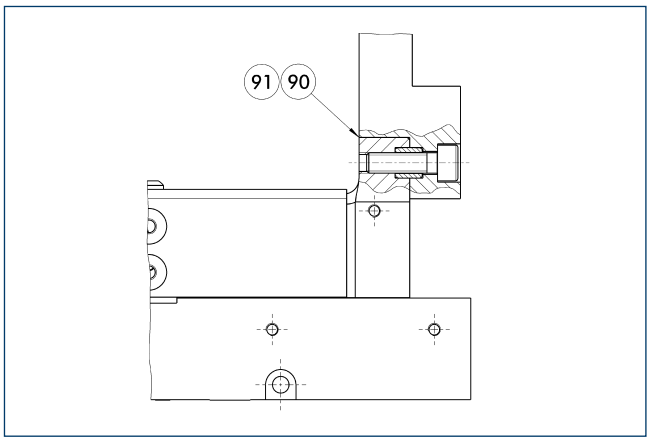

(90) Support top jaws at the base jaw

(91) For dimensions of steps at the top jaw see drawings of finger blanks

SDV-P pressure maintenance valve

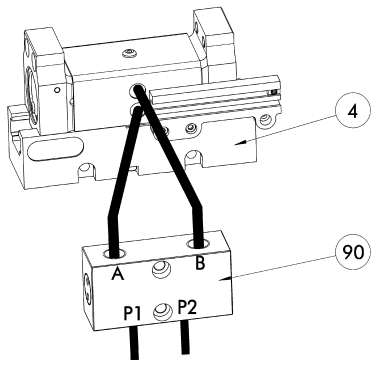

(4) Gripper
(90) SDV-P pressure maintenance valve

The SDV-P pressure maintenance valves ensure that the pressure in the piston chamber of pneumatic gripping, rotary, linear, and quick-change modules is maintained temporarily during an emergency stop.

Description	ID	
Pressure maintenance valve		
SDV-P 04	0403130	

RB 80 finger blanks

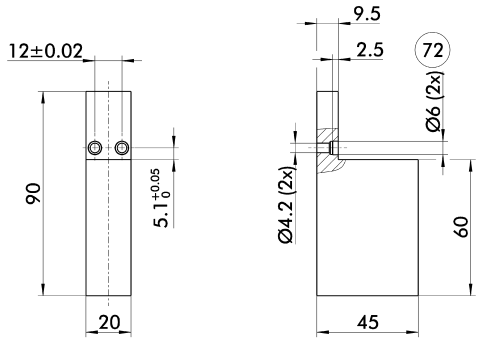

(72) Fit for centering sleeves

Finger blanks for customized subsequent machining.

Description	ID	Material	Scope of delivery
Finger blanks			
RB 80	0303089	Aluminum	2

Modular assembly automation

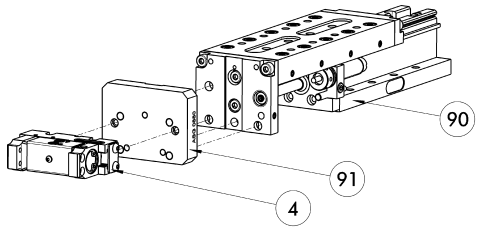

(4) Gripper
(91) ASG adapter plate
(90) CLM / KLM / LM / ELM / ELS / HLM linear module

Gripper and linear modules can be combined with standard adapters out of the modular assembly system. For more information see our catalog "Modular Assembly Automation".

Mounting kit for proximity switch

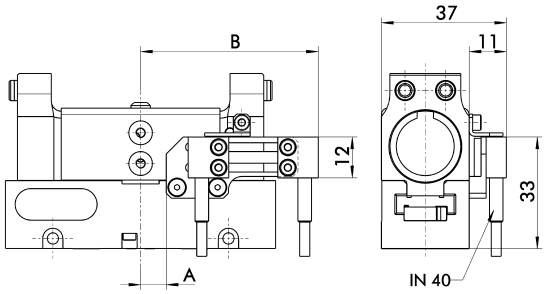

Typ	A	B
KGG 80-30	5	51
KGG 80-60	21	90

Limit position monitor can be mounted with mounting kit.

Description	ID	
Mounting kit for proximity switch		
AS-KGG 80-30	0303083	
AS-KGG 80-60 / 100-80 / 140-60	0303084	

ⓘ This mounting kit needs to be ordered optionally as an accessory.

Inductive proximity switches

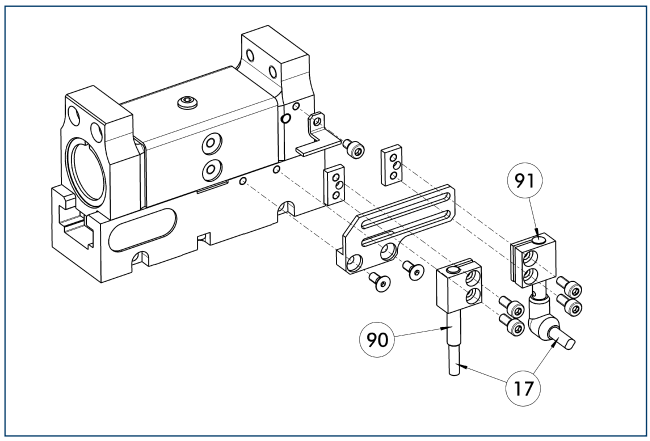

(17) Cable outlet
(91) IN ...-SA sensor
(90) IN ... sensor

Limit position monitor can be mounted with mounting kit.

Description	ID	Often combined
Mounting kit for proximity switch		
AS-KGG 80-30	0303083	
AS-KGG 80-60 / 100-80 / 140-60	0303084	
Inductive proximity switches		
IN 40-S-M12	0301574	
IN 40-S-M8	0301474	●
INK 40-S	0301555	
Inductive proximity switches with lateral outlet		
IN 40-S-M12-SA	0301577	
IN 40-S-M8-SA	0301473	●
INK 40-S-SA	0301565	
Cable extensions		
KV BG12-SG12 3P-0030-PNP	0301999	
KV BG12-SG12 3P-0060-PNP	0301998	
KV BW08-SG08 3P-0030-PNP	0301495	
KV BW08-SG08 3P-0100-PNP	0301496	
KV BW08-SG08 3P-0200-PNP	0301497	●
KV BW12-SG12 3P-0030-PNP	0301595	
KV BW12-SG12 3P-0100-PNP	0301596	
KV BW12-SG12 3P-0200-PNP	0301597	
Clip for plug / socket		
CLI-M12	0301464	
CLI-M8	0301463	
Connection cables		
KA BG08-L 3P-0300-PNP	0301622	●
KA BG08-L 3P-0500-PNP	0301623	
KA BG12-L 3P-0500-PNP	30016369	
KA BW08-L 3P-0300-PNP	0301594	
KA BW08-L 3P-0500-PNP	0301502	
KA BW12-L 3P-0300-PNP	0301503	
KA BW12-L 3P-0500-PNP	0301507	
Sensor distributor		
V2-M12	0301776	●

ⓘ Two sensors (closer/S) are required for each unit, plus extension cables as an option. This mounting kit needs to be ordered optionally as an accessory. Please note the minimum permitted bending radii for the sensor cables, which are generally 35 mm.

MMS electronic magnetic switches

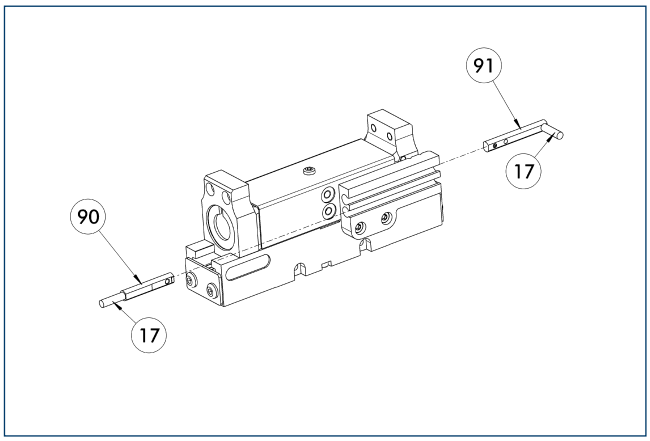

(17) Cable outlet
(91) MMS 22...-SA sensor
(90) MMS 22... sensor

End position monitoring for mounting in the C-slot.

Description	ID	Often combined
MMS electronic magnetic switches		
MMS 22-S-M8-PNP	0301032	●
MMSK 22-S-PNP	0301034	
MMS electronic magnetic switches with lateral cable outlet		
MMS 22-S-M8-PNP-SA	0301042	●
MMSK 22-S-PNP-SA	0301044	
Reed switches		
RMS 22-S-M8	0377720	●
Cable extensions		
KV BW08-SG08 3P-0030-PNP	0301495	
KV BW08-SG08 3P-0100-PNP	0301496	
KV BW08-SG08 3P-0200-PNP	0301497	●
Clip for plug / socket		
CLI-M8	0301463	
Connection cables		
KA BG08-L 3P-0300-PNP	0301622	●
KA BG08-L 3P-0500-PNP	0301623	
KA BW08-L 3P-0300-PNP	0301594	
KA BW08-L 3P-0500-PNP	0301502	
RSS radio sensor system		
RSS-T2	0377710	
Sensor distributor		
V2-M8	0301775	●
V4-M8	0301746	
V8-M8	0301751	

ⓘ Two sensors (closer/S) are required for each unit, plus extension cables as an option. Please note the minimum permitted bending radii for the sensor cables, which are generally 35 mm.

MMS PI1 programmable magnetic switches

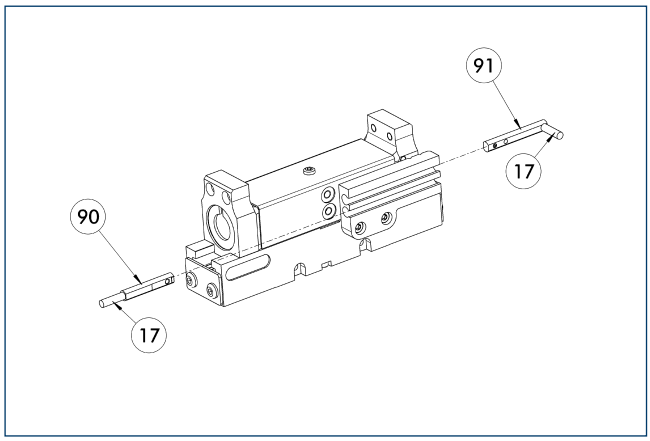

(17) Cable outlet
(91) MMS 22...-PI1-...-SA sensor
(90) MMS 22...-PI1-... sensor

Position query with one programmable position per sensor and electronics integrated in sensor. Programmable via MT magnet teaching tool (included in the scope of delivery) or ST plug teaching tool (optional). Limit position query mounted in C-groove. If the ST plug teaching tools are listed in the table, teaching can only take place with the ST plug teaching tools.

Description	ID	Often combined
MMS PI1 programmable magnetic switches		
MMS 22-PI1-S-M8-PNP	0301160	●
MMSK 22-PI1-S-PNP	0301162	
MMS PI1-HD programmable magnetic switches with stainless steel housing		
MMS 22-PI1-S-M8-PNP-HD	0301110	●
MMSK 22-PI1-S-PNP-HD	0301112	
MMS PI1 programmable magnetic switches with lateral cable outlet		
MMS 22-PI1-S-M8-PNP-SA	0301166	●
MMSK 22-PI1-S-PNP-SA	0301168	

ⓘ Two sensors (closer/S) are required for each unit, plus extension cables as an option. Please note the minimum permitted bending radii for the sensor cables, which are generally 35 mm. Connection cable, cable extensions, and sensor distributors can be found in the table for the MMS 22.

MMS PI2 programmable magnetic switches

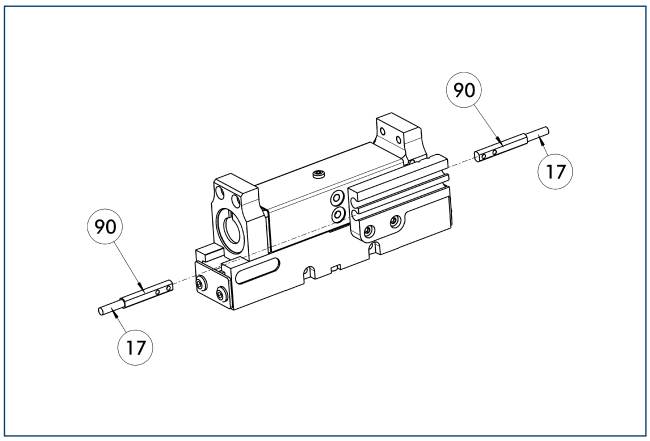

(17) Cable outlet
(90) MMS 22...-PI2-... sensor

Position query with two programmable positions per sensor and electronics integrated in sensor. Programmable via MT magnet teaching tool (included in the scope of delivery) or ST plug teaching tool (optional). Limit position query mounted in C-groove. If the ST plug teaching tools are listed in the table, teaching can only take place with the ST plug teaching tools.

Description	ID	Often combined
MMS PI2 programmable magnetic switches		
MMS 22-PI2-S-M8-PNP	0301180	●
MMSK 22-PI2-S-PNP	0301182	
MMS PI2-HD programmable magnetic switches with stainless steel housing		
MMS 22-PI2-S-M8-PNP-HD	0301130	●
MMSK 22-PI2-S-PNP-HD	0301132	

ⓘ Per unit one sensor (closer/NO) is required, optionally a cable extension. Please note the minimum permitted bending radii for the sensor cables, which are generally 35 mm. With the KGG-series, the MMS-P could just cover the whole stroke range of KGG 60-20 / 70-24 / 80-30.

MMS-P programmable magnetic switches

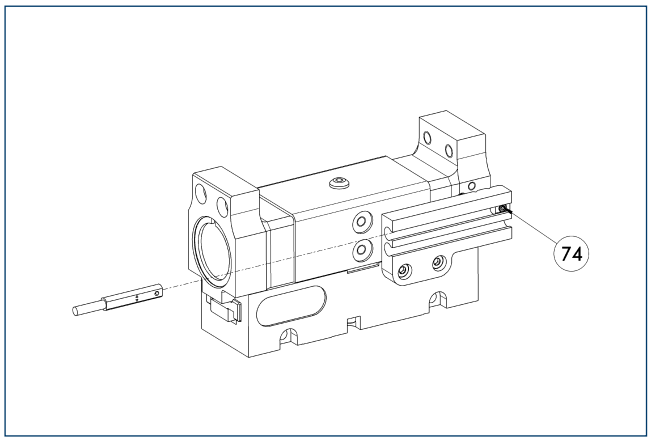

74 Stop for MMS-P

Position monitoring with two programmable positions per sensor. The end position monitoring is mounted in the C-slot.

Description	ID	Often combined
MMS-P programmable magnetic switches		
MMSK-P 22-S-PNP	0301371	
MMS-P 22-S-M8-PNP	0301370	●
Clip for plug / socket		
CLI-M8	0301463	
Connection cables		
KA BG08-L 4P-0500	0307767	●
KA BG08-L 4P-1000	0307768	
KA BW08-L 4P-0500	0307765	
KA BW08-L 4P-1000	0307766	
Sensor distributor		
V2-M8-4P-2XM8-3P	0301380	

ⓘ Per unit one sensor (closer/NO) is required, optionally a cable extension. Please note the minimum permitted bending radii for the sensor cables, which are generally 35 mm. With the KGG-series, the MMS-P could just cover the whole stroke range of KGG 60-20 / 70-24 / 80-30.

KGG 100

SCHUNK Grippers pneumatic | 2-Finger Parallel Grippers | Small Components Gripper

Gripping force, O.D. gripping

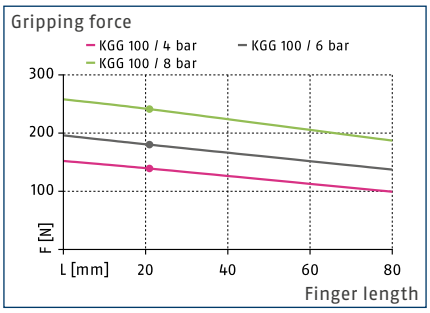

Gripping force, I.D. gripping

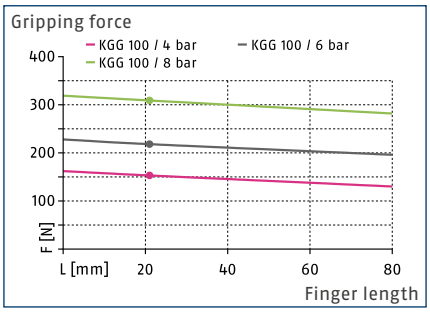

Finger load

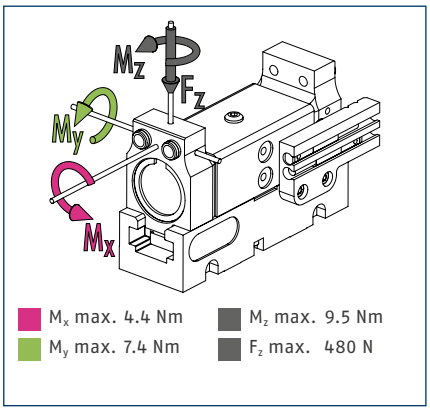

ⓘ The indicated moments and forces are static values, apply per base jaw and may occur simultaneously. M_y may arise in addition to the moment generated by the gripping force itself. If the max. permitted finger weight is exceeded, it is impreative to throttle the air supply so that the jaw movement occurs without any hitting or bouncing. Service life may be reduced.

Technical data

Description		KGG 100-40	KGG 100-80
ID		0303065	0303066
Stroke per jaw	[mm]	20	40
Closing- / opening force	[N]	175/220	175/220
Weight	[kg]	0.37	0.5
Recommended workpiece weight	[kg]	0.9	0.9
Fluid consumption per double stroke	[cm³]	22.5	45
min. / max. operating pressure	[bar]	2.5/8	2.5/8
Nominal operating pressure	[bar]	6	6
Closing- / opening time	[s]	0.09/0.07	0.19/0.15
max. permitted finger length	[mm]	80	80
max. permitted weight per finger	[kg]	0.3	0.3
IP class		40	40
min. / max. ambient temperature	[°C]	5/90	5/90
Repeat accuracy	[mm]	0.02	0.02

ⓘ Requirements on the levelness of the bolting surface (in relation to the entire bolting surface for the gripper):
- < 0.02 mm with an edge length of up to 100 mm
- < 0.05 mm with an edge length of 100 mm or longer

Main view

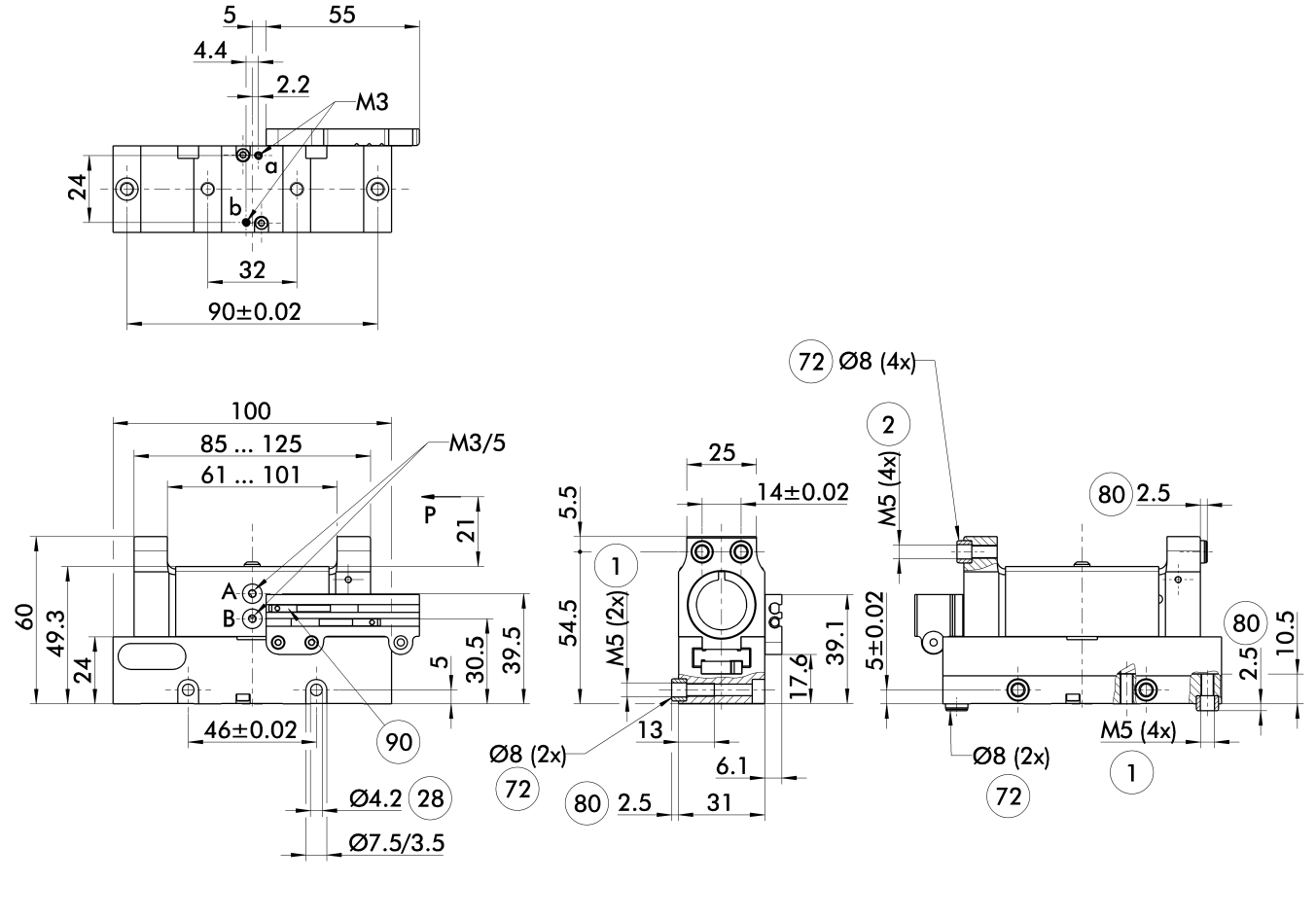

The drawing shows the gripper in the basic version with closed jaws, without dimensional consideration of the options described below.

ⓘ The SDV-P pressure maintenance valve can be used as a gripping force maintenance device (see catalog section on "Accessories").

A, a Main / direct connection, gripper opening

B, b Main / direct connection, gripper closing

(1) Gripper connection

(2) Finger connection

(28) Through-bore

(72) Fit for centering sleeves

(80) Depth of the centering sleeve hole in the mating part

(90) MMS 22... sensor

Maximum permitted finger projection

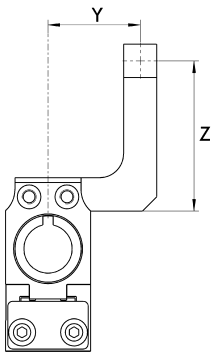

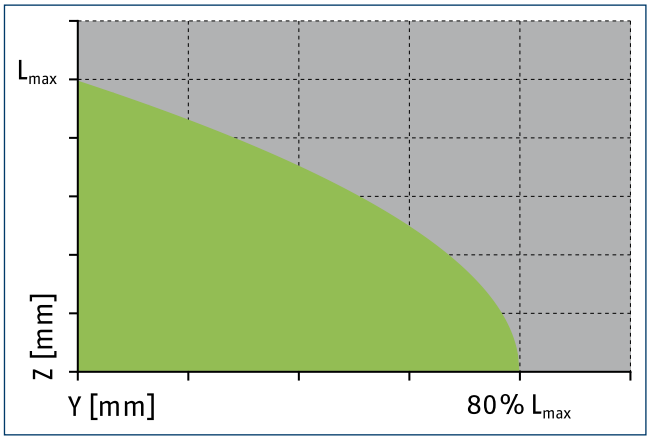

Permitted range

Inadmissible range

L_{max} is equivalent to the maximum permitted finger length, see the chart of technical specifications.

Hose-free direct connection M3

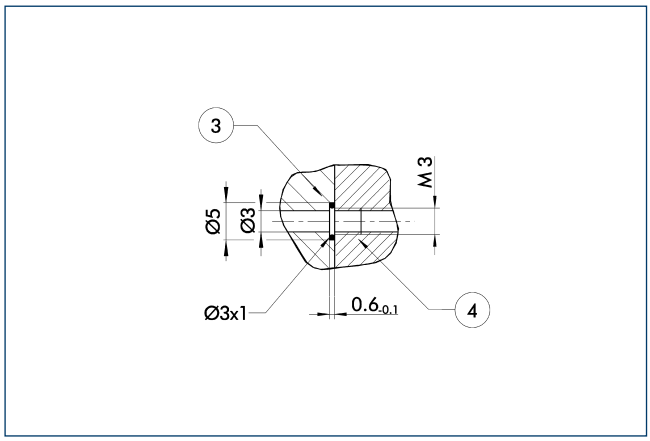

3 Adapter

4 Gripper

The direct connection is used for supplying compressed air without hoses. Instead, the pressure medium is fed through bore-holes in the mounting plate.

Stroke versions

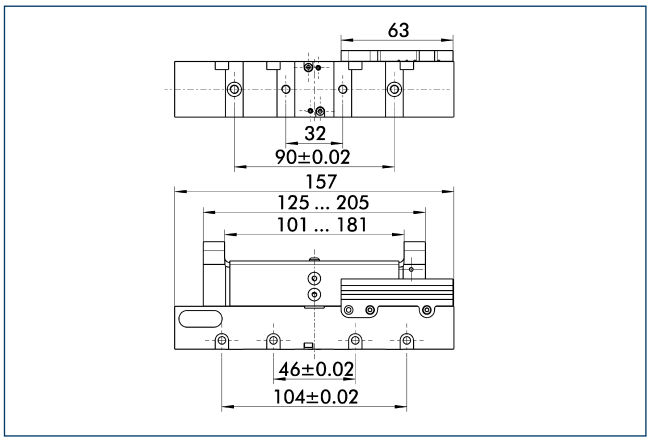

The drawing shows changes in dimensions of the versions with a differing stroke compared to the main view of the shown version.

Jaw design O.D. gripping

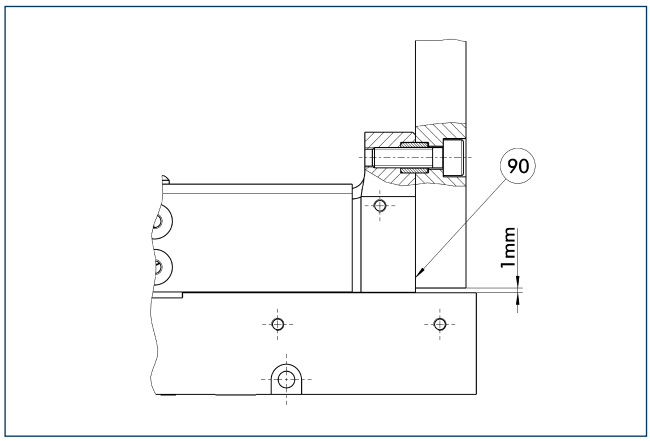

90 Support top jaws at the base jaw

Jaw design I.D. gripping

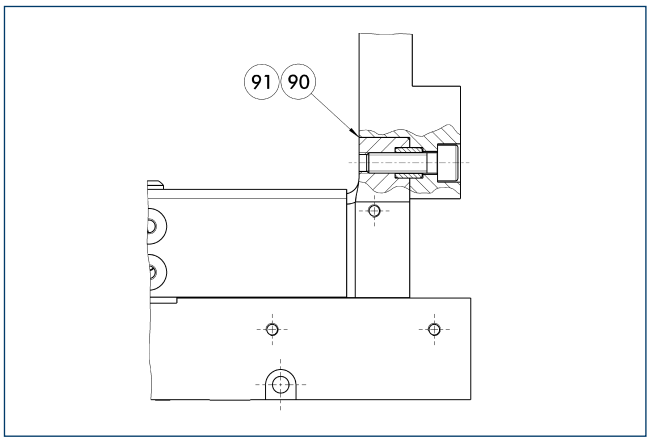

90 Support top jaws at the base jaw

91 For dimensions of steps at the top jaw see drawings of finger blanks

SDV-P pressure maintenance valve

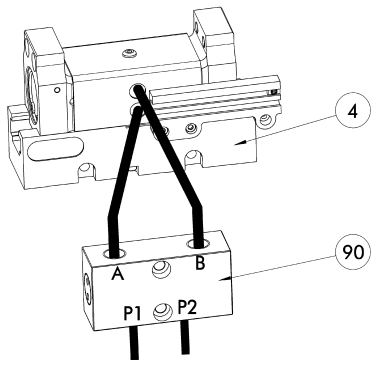

(4) Gripper
(90) SDV-P pressure maintenance valve

The SDV-P pressure maintenance valves ensure that the pressure in the piston chamber of pneumatic gripping, rotary, linear, and quick-change modules is maintained temporarily during an emergency stop.

Description	ID	
Pressure maintenance valve		
SDV-P 04	0403130	

RB 100 finger blanks

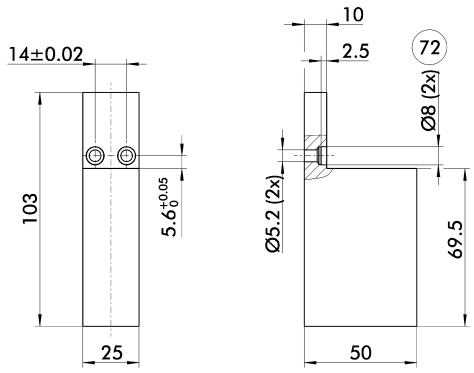

(72) Fit for centering sleeves

Finger blanks for customized subsequent machining.

Description	ID	Material	Scope of delivery
Finger blanks			
RB 100	0303090	Aluminum	2

Modular assembly automation

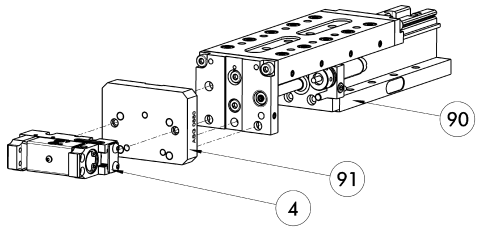

(4) Gripper
(91) ASG adapter plate
(90) CLM / KLM / LM / ELM / ELS / HLM linear module

Gripper and linear modules can be combined with standard adapters out of the modular assembly system. For more information see our catalog "Modular Assembly Automation".

Mounting kit for proximity switch

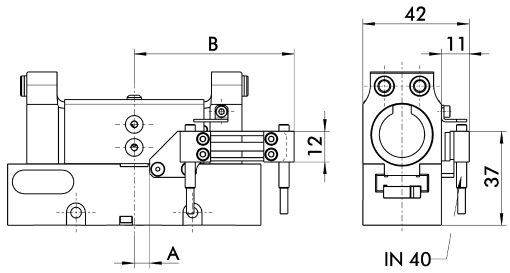

Typ	A	B
KGG 100-40	6	63
KGG 100-80	28	102

Limit position monitor can be mounted with mounting kit.

Description	ID	
Mounting kit for proximity switch		
AS-KGG 100-40	0303082	
AS-KGG 80-60 / 100-80 / 140-60	0303084	

ⓘ This mounting kit needs to be ordered optionally as an accessory.

Inductive proximity switches

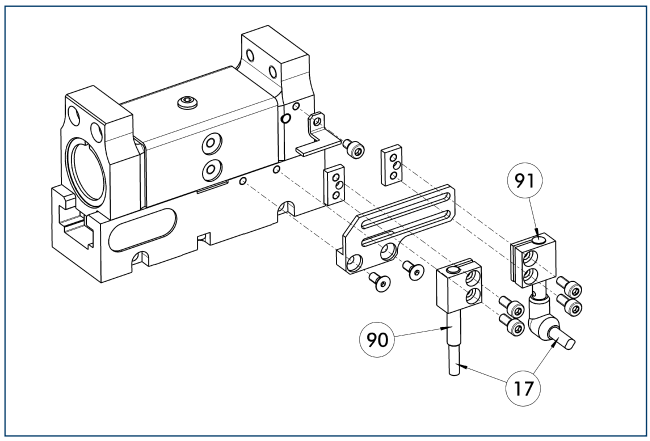

(17) Cable outlet
(91) IN ...-SA sensor
(90) IN ... sensor

Limit position monitor can be mounted with mounting kit.

Description	ID	Often combined
Mounting kit for proximity switch		
AS-KGG 100-40	0303082	
AS-KGG 80-60 / 100-80 / 140-60	0303084	
Inductive proximity switches		
IN 40-S-M12	0301574	
IN 40-S-M8	0301474	●
INK 40-S	0301555	
Inductive proximity switches with lateral outlet		
IN 40-S-M12-SA	0301577	
IN 40-S-M8-SA	0301473	●
INK 40-S-SA	0301565	
Cable extensions		
KV BG12-SG12 3P-0030-PNP	0301999	
KV BG12-SG12 3P-0060-PNP	0301998	
KV BW08-SG08 3P-0030-PNP	0301495	
KV BW08-SG08 3P-0100-PNP	0301496	
KV BW08-SG08 3P-0200-PNP	0301497	●
KV BW12-SG12 3P-0030-PNP	0301595	
KV BW12-SG12 3P-0100-PNP	0301596	
KV BW12-SG12 3P-0200-PNP	0301597	
Clip for plug / socket		
CLI-M12	0301464	
CLI-M8	0301463	
Connection cables		
KA BG08-L 3P-0300-PNP	0301622	●
KA BG08-L 3P-0500-PNP	0301623	
KA BG12-L 3P-0500-PNP	30016369	
KA BW08-L 3P-0300-PNP	0301594	
KA BW08-L 3P-0500-PNP	0301502	
KA BW12-L 3P-0300-PNP	0301503	
KA BW12-L 3P-0500-PNP	0301507	
Sensor distributor		
V2-M12	0301776	●

ⓘ Two sensors (closer/S) are required for each unit, plus extension cables as an option. This mounting kit needs to be ordered optionally as an accessory. Please note the minimum permitted bending radii for the sensor cables, which are generally 35 mm.

MMS electronic magnetic switches

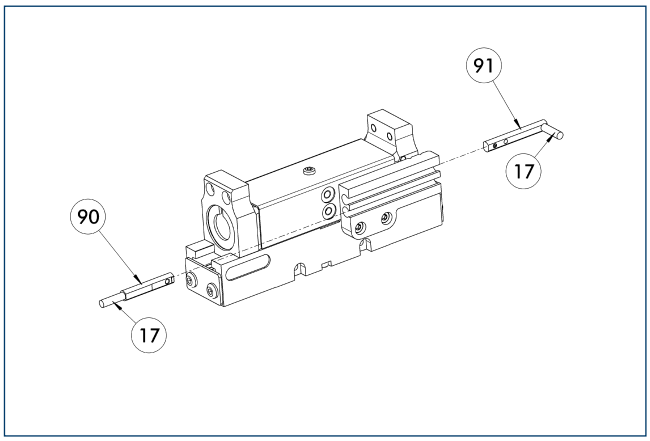

(17) Cable outlet
(91) MMS 22...-SA sensor
(90) MMS 22... sensor

End position monitoring for mounting in the C-slot.

Description	ID	Often combined
MMS electronic magnetic switches		
MMS 22-S-M8-PNP	0301032	●
MMSK 22-S-PNP	0301034	
MMS electronic magnetic switches with lateral cable outlet		
MMS 22-S-M8-PNP-SA	0301042	●
MMSK 22-S-PNP-SA	0301044	
Reed switches		
RMS 22-S-M8	0377720	●
Cable extensions		
KV BW08-SG08 3P-0030-PNP	0301495	
KV BW08-SG08 3P-0100-PNP	0301496	
KV BW08-SG08 3P-0200-PNP	0301497	●
Clip for plug / socket		
CLI-M8	0301463	
Connection cables		
KA BG08-L 3P-0300-PNP	0301622	●
KA BG08-L 3P-0500-PNP	0301623	
KA BW08-L 3P-0300-PNP	0301594	
KA BW08-L 3P-0500-PNP	0301502	
RSS radio sensor system		
RSS-T2	0377710	
Sensor distributor		
V2-M8	0301775	●
V4-M8	0301746	
V8-M8	0301751	

ⓘ Two sensors (closer/S) are required for each unit, plus extension cables as an option. Please note the minimum permitted bending radii for the sensor cables, which are generally 35 mm.

MMS PI1 programmable magnetic switches

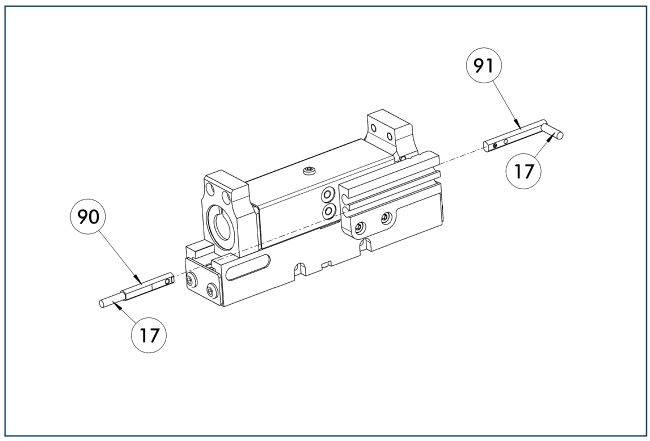

(17) Cable outlet
(91) MMS 22...-PI1-...-SA sensor
(90) MMS 22...-PI1-... sensor

Position query with one programmable position per sensor and electronics integrated in sensor. Programmable via MT magnet teaching tool (included in the scope of delivery) or ST plug teaching tool (optional). Limit position query mounted in C-groove. If the ST plug teaching tools are listed in the table, teaching can only take place with the ST plug teaching tools.

Description	ID	Often combined
MMS PI1 programmable magnetic switches		
MMS 22-PI1-S-M8-PNP	0301160	●
MMSK 22-PI1-S-PNP	0301162	
MMS PI1-HD programmable magnetic switches with stainless steel housing		
MMS 22-PI1-S-M8-PNP-HD	0301110	●
MMSK 22-PI1-S-PNP-HD	0301112	
MMS PI1 programmable magnetic switches with lateral cable outlet		
MMS 22-PI1-S-M8-PNP-SA	0301166	●
MMSK 22-PI1-S-PNP-SA	0301168	

ⓘ Two sensors (closer/S) are required for each unit, plus extension cables as an option. Please note the minimum permitted bending radii for the sensor cables, which are generally 35 mm. Connection cable, cable extensions, and sensor distributors can be found in the table for the MMS 22.

KGG 140

SCHUNK Grippers pneumatic | 2-Finger Parallel Grippers | Small Components Gripper

Gripping force, O.D. gripping

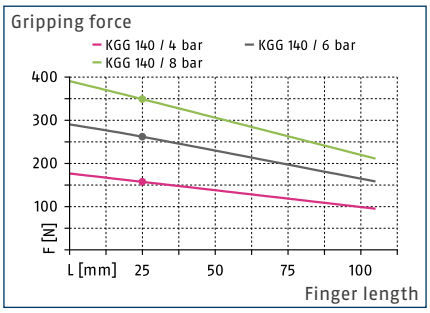

Gripping force, I.D. gripping

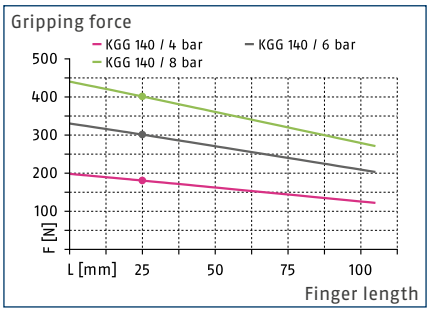

Finger load

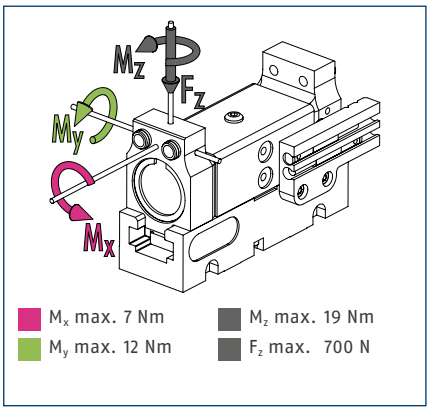

ⓘ The indicated moments and forces are static values, apply per base jaw and may occur simultaneously. M_y may arise in addition to the moment generated by the gripping force itself. If the max. permitted finger weight is exceeded, it is impreative to throttle the air supply so that the jaw movement occurs without any hitting or bouncing. Service life may be reduced.

Technical data

Description		KGG 140-60
ID		0303070
Stroke per jaw	[mm]	30
Closing- / opening force	[N]	260/300
Weight	[kg]	0.77
Recommended workpiece weight	[kg]	1.3
Fluid consumption per double stroke	[cm³]	42
min. / max. operating pressure	[bar]	2.5/8
Nominal operating pressure	[bar]	6
Closing- / opening time	[s]	0.17/0.17
max. permitted finger length	[mm]	100
max. permitted weight per finger	[kg]	0.5
IP class		40
min. / max. ambient temperature	[°C]	5/90
Repeat accuracy	[mm]	0.02

ⓘ Requirements on the levelness of the bolting surface (in relation to the entire bolting surface for the gripper):
- < 0.02 mm with an edge length of up to 100 mm
- < 0.05 mm with an edge length of 100 mm or longer

Main view

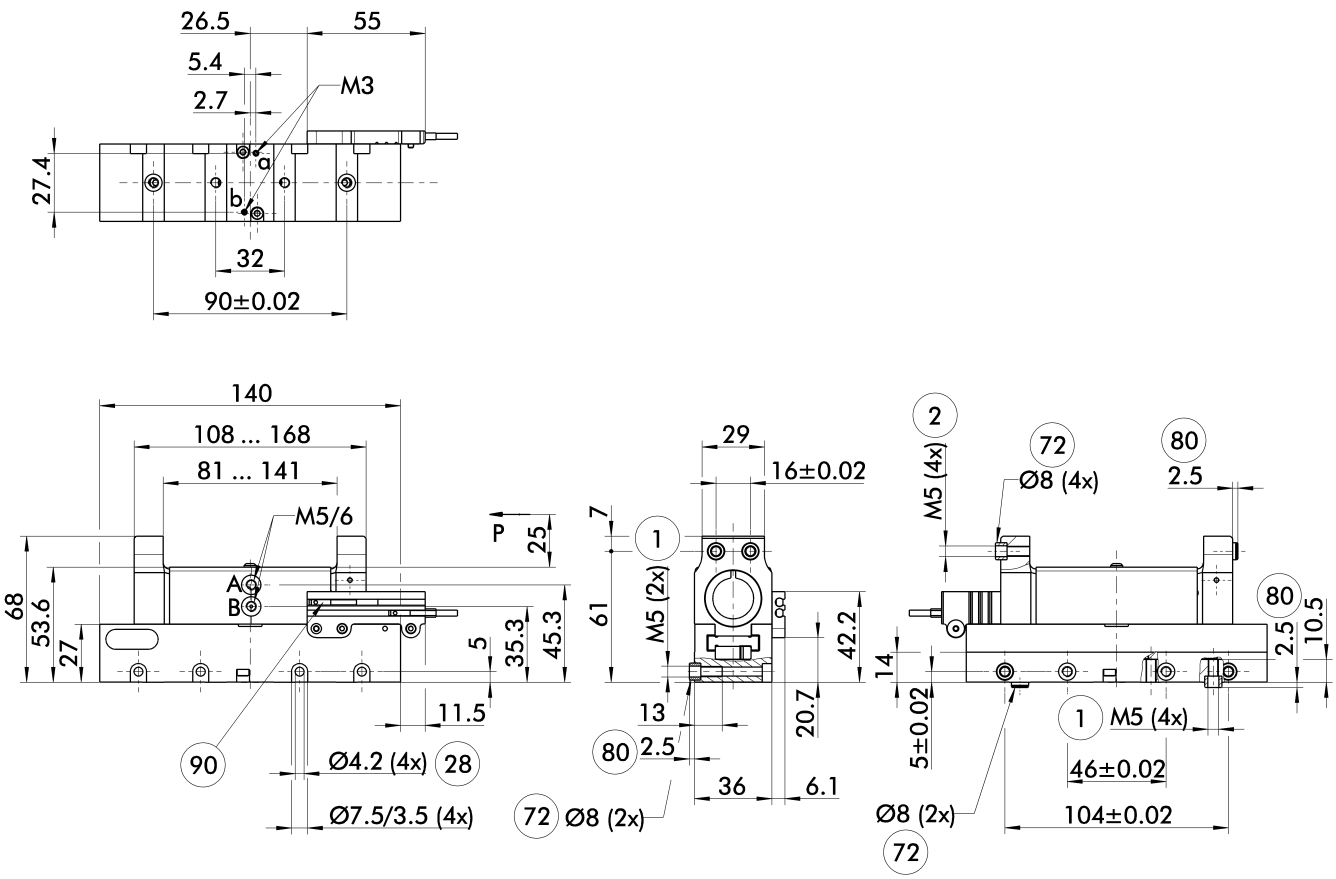

The drawing shows the gripper in the basic version with closed jaws, without dimensional consideration of the options described below.

ⓘ The SDV-P pressure maintenance valve can be used as a gripping force maintenance device (see catalog section on "Accessories").

A, a Main / direct connection, gripper opening

B, b Main / direct connection, gripper closing

(1) Gripper connection

(2) Finger connection

(28) Through-bore

(72) Fit for centering sleeves

(80) Depth of the centering sleeve hole in the mating part

(90) MMS 22... sensor

Maximum permitted finger projection

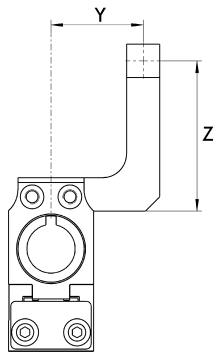

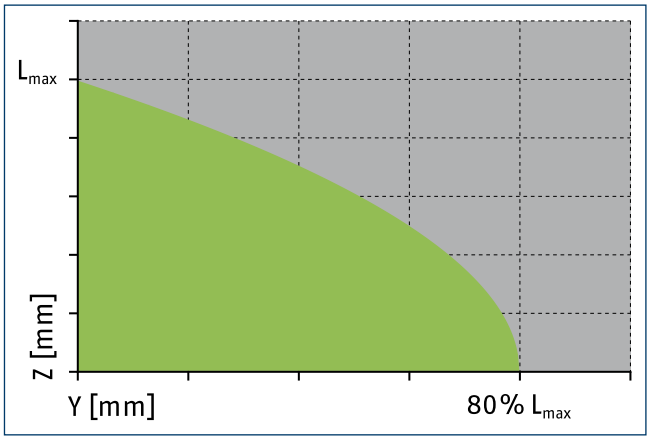

Permitted range

Inadmissible range

L_{max} is equivalent to the maximum permitted finger length, see the chart of technical specifications.

Hose-free direct connection M3

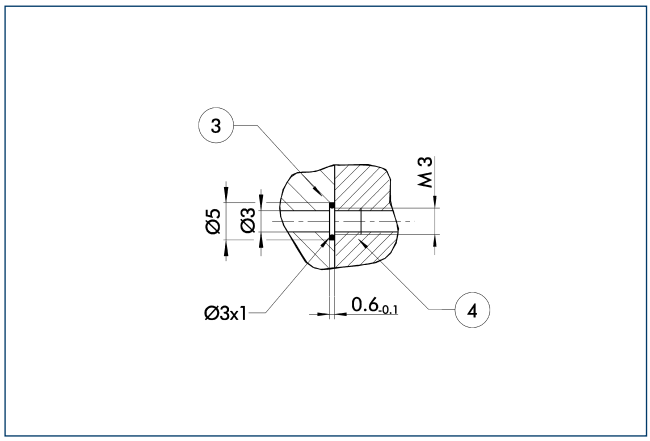

(3) Adapter (4) Gripper

The direct connection is used for supplying compressed air without hoses. Instead, the pressure medium is fed through bore-holes in the mounting plate.

Jaw design O.D. gripping

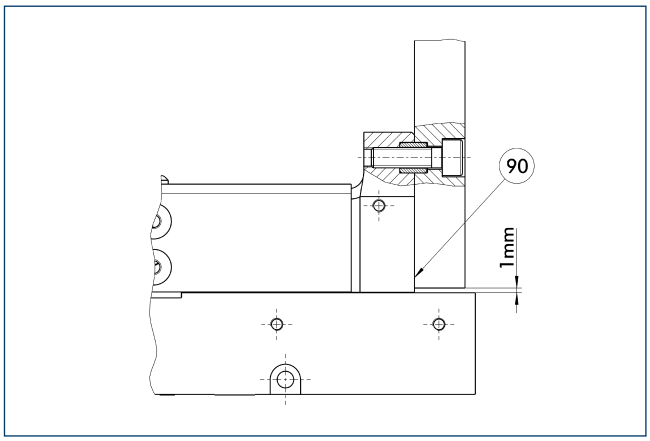

(90) Support top jaws at the base jaw

Jaw design I.D. gripping

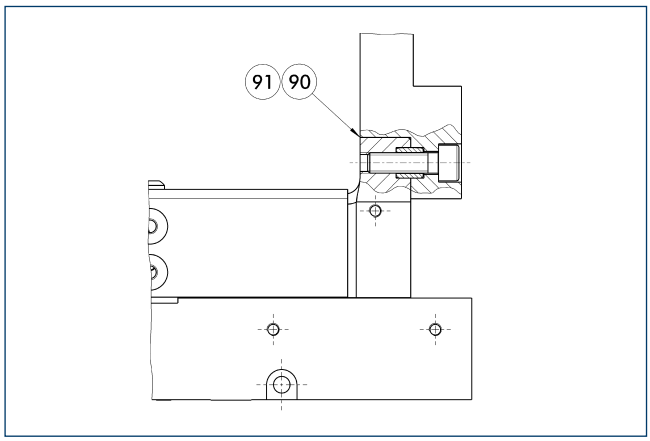

(90) Support top jaws at the base jaw (91) For dimensions of steps at the top jaw see drawings of finger blanks

SDV-P pressure maintenance valve

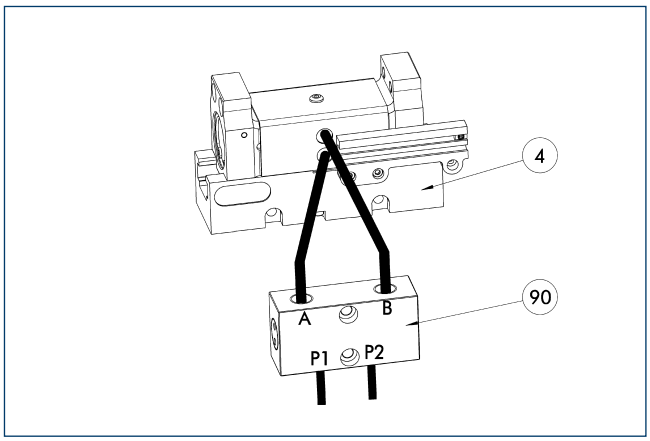

(4) Gripper (90) SDV-P pressure maintenance valve

The SDV-P pressure maintenance valves ensure that the pressure in the piston chamber of pneumatic gripping, rotary, linear, and quick-change modules is maintained temporarily during an emergency stop.

Description	ID	
Pressure maintenance valve		
SDV-P 04	0403130	

RB 140 finger blanks

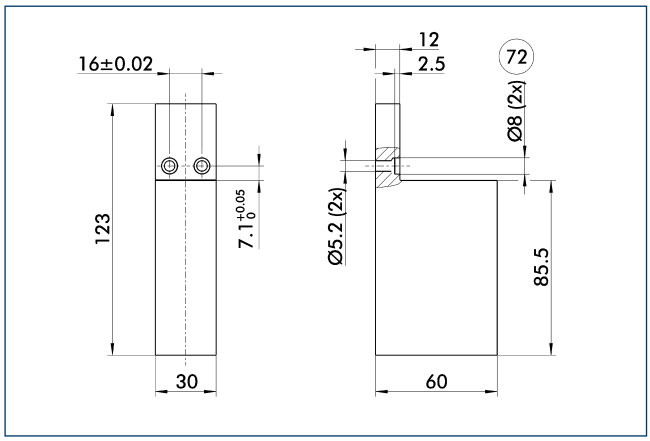

72 Fit for centering sleeves

Finger blanks for customized subsequent machining.

Description	ID	Material	Scope of delivery
Finger blanks			
RB 140	0303091	Aluminum	2

Modular assembly automation

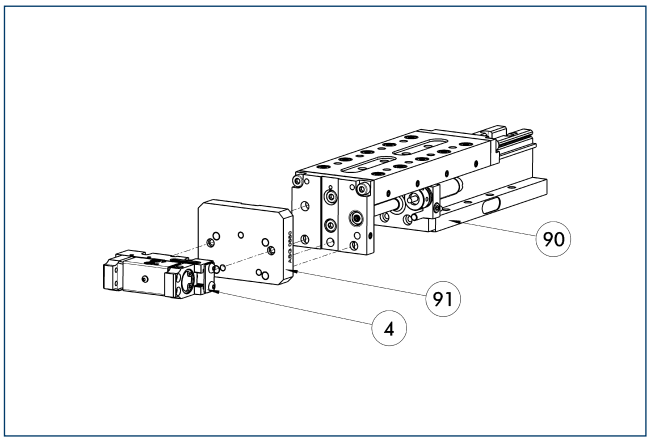

4 Gripper
91 ASG adapter plate
90 CLM / KLM / LM / ELM / ELS / HLM linear module

Gripper and linear modules can be combined with standard adapters out of the modular assembly system. For more information see our catalog "Modular Assembly Automation".

Mounting kit for proximity switch

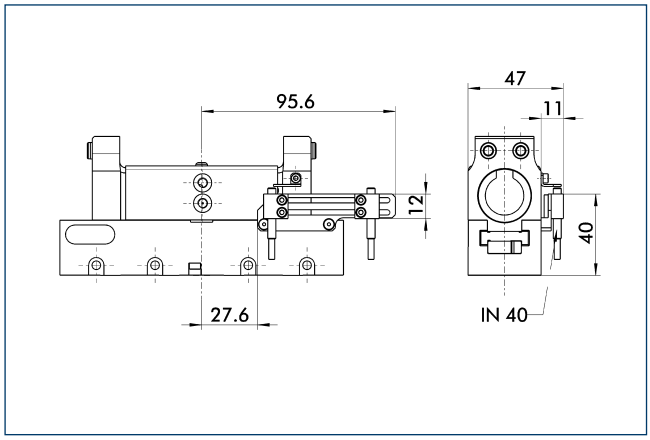

Limit position monitor can be mounted with mounting kit.

Description	ID	
Mounting kit for proximity switch		
AS-KGG 80-60 / 100-80 / 140-60	0303084	

ⓘ This mounting kit needs to be ordered optionally as an accessory.

Inductive proximity switches

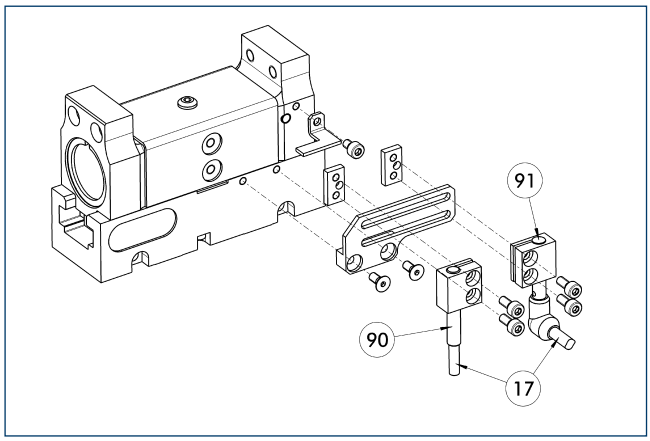

17 Cable outlet
91 IN ...-SA sensor
90 IN ... sensor

Limit position monitor can be mounted with mounting kit.

Description	ID	Often combined
Mounting kit for proximity switch		
AS-KGG 80-60 / 100-80 / 140-60	0303084	
Inductive proximity switches		
IN 40-S-M12	0301574	
IN 40-S-M8	0301474	●
INK 40-S	0301555	
Inductive proximity switches with lateral outlet		
IN 40-S-M12-SA	0301577	
IN 40-S-M8-SA	0301473	●
INK 40-S-SA	0301565	
Cable extensions		
KV BG12-SG12 3P-0030-PNP	0301999	
KV BG12-SG12 3P-0060-PNP	0301998	
KV BW08-SG08 3P-0030-PNP	0301495	
KV BW08-SG08 3P-0100-PNP	0301496	
KV BW08-SG08 3P-0200-PNP	0301497	●
KV BW12-SG12 3P-0030-PNP	0301595	
KV BW12-SG12 3P-0100-PNP	0301596	
KV BW12-SG12 3P-0200-PNP	0301597	
Clip for plug / socket		
CLI-M12	0301464	
CLI-M8	0301463	
Connection cables		
KA BG08-L 3P-0300-PNP	0301622	●
KA BG08-L 3P-0500-PNP	0301623	
KA BG12-L 3P-0500-PNP	30016369	
KA BW08-L 3P-0300-PNP	0301594	
KA BW08-L 3P-0500-PNP	0301502	
KA BW12-L 3P-0300-PNP	0301503	
KA BW12-L 3P-0500-PNP	0301507	
Sensor distributor		
V2-M8	0301775	●
V2-M12	0301776	●

ⓘ Two sensors (closer/S) are required for each unit, plus extension cables as an option. This mounting kit needs to be ordered optionally as an accessory. Please note the minimum permitted bending radii for the sensor cables, which are generally 35 mm.

MMS electronic magnetic switches

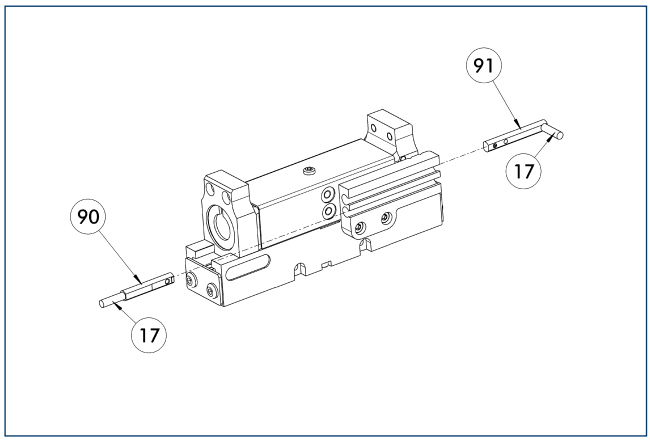

(17) Cable outlet
(91) MMS 22...-SA sensor
(90) MMS 22... sensor

End position monitoring for mounting in the C-slot.

Description	ID	Often combined
MMS electronic magnetic switches		
MMS 22-S-M8-PNP	0301032	●
MMSK 22-S-PNP	0301034	
MMS electronic magnetic switches with lateral cable outlet		
MMS 22-S-M8-PNP-SA	0301042	●
MMSK 22-S-PNP-SA	0301044	
Reed switches		
RMS 22-S-M8	0377720	●
Cable extensions		
KV BW08-SG08 3P-0030-PNP	0301495	
KV BW08-SG08 3P-0100-PNP	0301496	
KV BW08-SG08 3P-0200-PNP	0301497	●
Clip for plug / socket		
CLI-M8	0301463	
Connection cables		
KA BG08-L 3P-0300-PNP	0301622	●
KA BG08-L 3P-0500-PNP	0301623	
KA BW08-L 3P-0300-PNP	0301594	
KA BW08-L 3P-0500-PNP	0301502	
RSS radio sensor system		
RSS-T2	0377710	
Sensor distributor		
V2-M8	0301775	●
V4-M8	0301746	
V8-M8	0301751	

ⓘ Two sensors (closer/S) are required for each unit, plus extension cables as an option. Please note the minimum permitted bending radii for the sensor cables, which are generally 35 mm.

MMS PI1 programmable magnetic switches

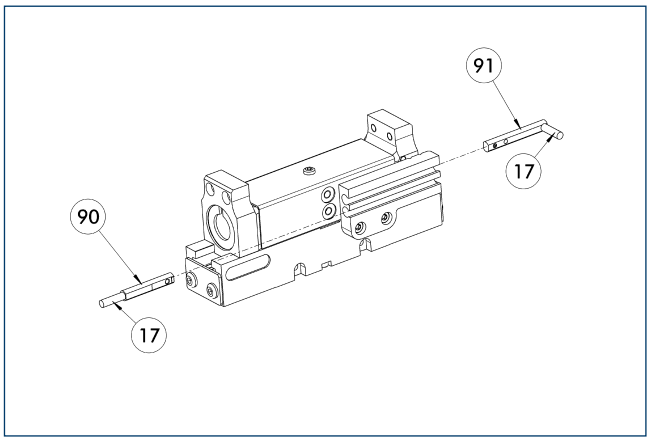

(17) Cable outlet
(91) MMS 22...-PI1-...-SA sensor
(90) MMS 22...-PI1-... sensor

Position query with one programmable position per sensor and electronics integrated in sensor. Programmable via MT magnet teaching tool (included in the scope of delivery) or ST plug teaching tool (optional). Limit position query mounted in C-groove. If the ST plug teaching tools are listed in the table, teaching can only take place with the ST plug teaching tools.

Description	ID	Often combined
MMS PI1 programmable magnetic switches		
MMS 22-PI1-S-M8-PNP	0301160	●
MMSK 22-PI1-S-PNP	0301162	
MMS PI1-HD programmable magnetic switches with stainless steel housing		
MMS 22-PI1-S-M8-PNP-HD	0301110	●
MMSK 22-PI1-S-PNP-HD	0301112	
MMS PI1 programmable magnetic switches with lateral cable outlet		
MMS 22-PI1-S-M8-PNP-SA	0301166	●
MMSK 22-PI1-S-PNP-SA	0301168	

ⓘ Two sensors (closer/S) are required for each unit, plus extension cables as an option. Please note the minimum permitted bending radii for the sensor cables, which are generally 35 mm. Connection cable, cable extensions, and sensor distributors can be found in the table for the MMS 22.

KGG 220

SCHUNK Grippers pneumatic | 2-Finger Parallel Grippers | Small Components Gripper

Gripping force, O.D. gripping

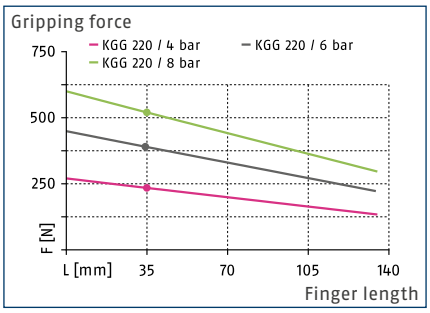

Gripping force, I.D. gripping

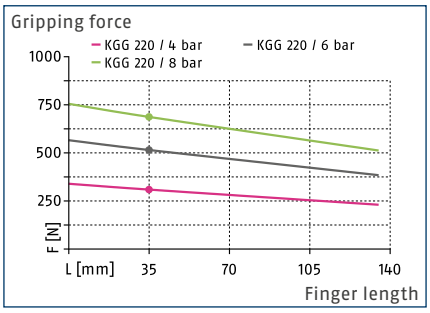

Finger load

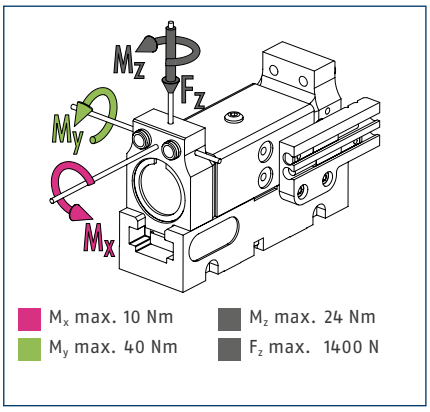

ⓘ The indicated moments and forces are static values, apply per base jaw and may occur simultaneously. M_y may arise in addition to the moment generated by the gripping force itself. If the max. permitted finger weight is exceeded, it is impreative to throttle the air supply so that the jaw movement occurs without any hitting or bouncing. Service life may be reduced.

Technical data

Description		KGG 220
ID		0340312
Stroke per jaw	[mm]	45
Closing- / opening force	[N]	390/515
Weight	[kg]	2
Recommended workpiece weight	[kg]	1.95
Fluid consumption per double stroke	[cm³]	98
min. / max. operating pressure	[bar]	2.5/8
Nominal operating pressure	[bar]	6
Closing- / opening time	[s]	0.25/0.25
max. permitted finger length	[mm]	130
max. permitted weight per finger	[kg]	1
IP class		30
min. / max. ambient temperature	[°C]	5/90
Repeat accuracy	[mm]	0.05

ⓘ Requirements on the levelness of the bolting surface (in relation to the entire bolting surface for the gripper):
- < 0.02 mm with an edge length of up to 100 mm
- < 0.05 mm with an edge length of 100 mm or longer

Main view

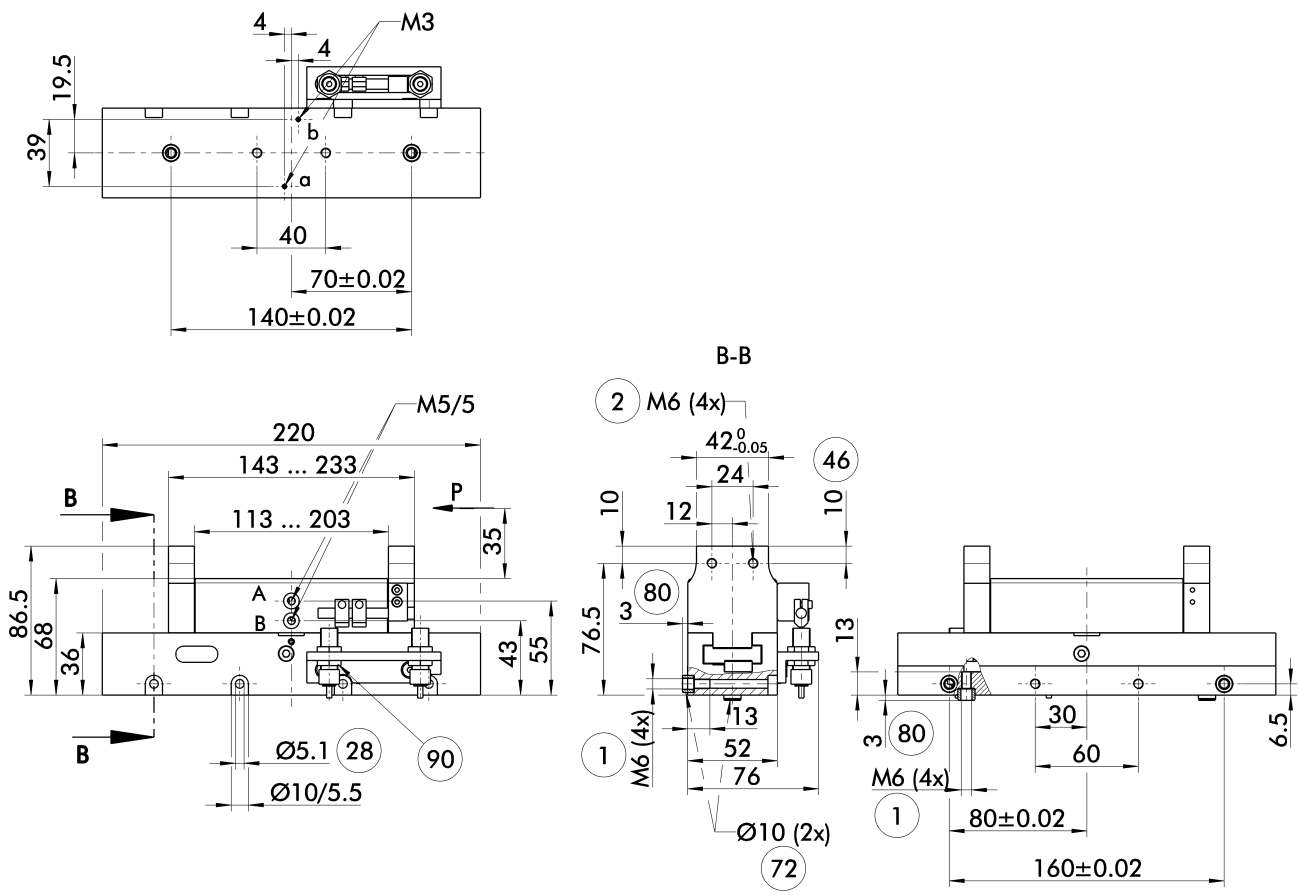

The drawing shows the gripper in the basic version with closed jaws, without dimensional consideration of the options described below.

ⓘ The SDV-P pressure maintenance valve can be used as a gripping force maintenance device (see catalog section on "Accessories").

A, a Main / direct connection, gripper opening

B, b Main / direct connection, gripper closing

(1) Gripper connection

(2) Finger connection

(28) Through-bore

(46) Fitting length

(72) Fit for centering sleeves

(80) Depth of the centering sleeve hole in the mating part

(90) IN ... sensor

Maximum permitted finger projection

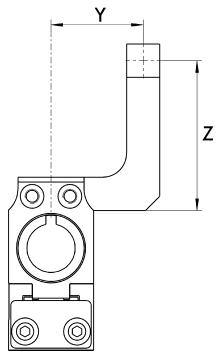

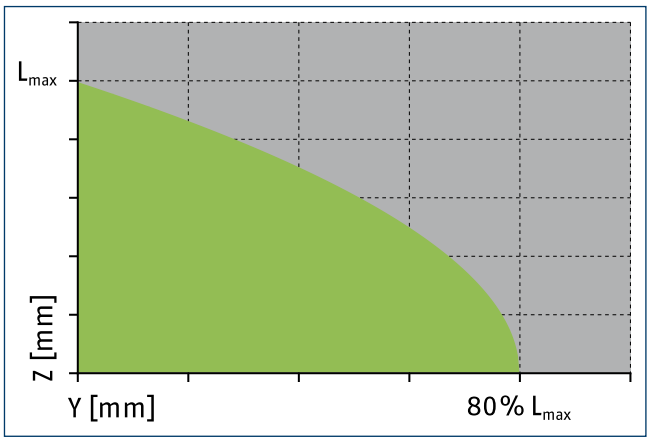

Permitted range

Inadmissible range

L_{max} is equivalent to the maximum permitted finger length, see the chart of technical specifications.

Hose-free direct connection M3

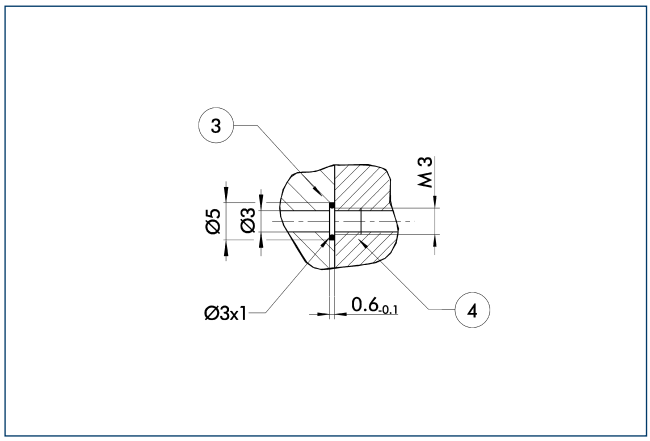

3 Adapter

4 Gripper

The direct connection is used for supplying compressed air without hoses. Instead, the pressure medium is fed through bore-holes in the mounting plate.

Jaw design

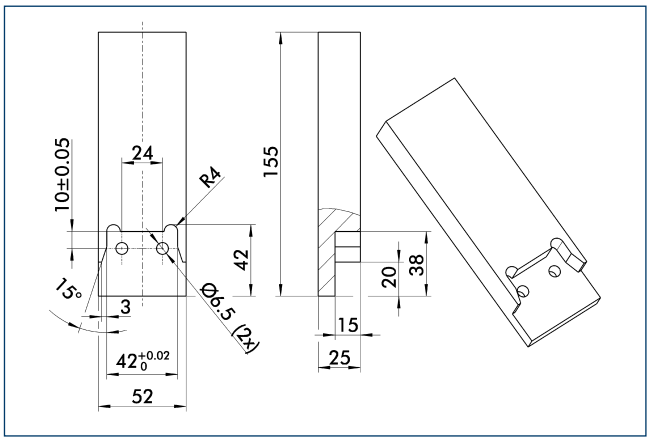

Suggestion for connection dimensions of the gripper fingers.

SDV-P pressure maintenance valve

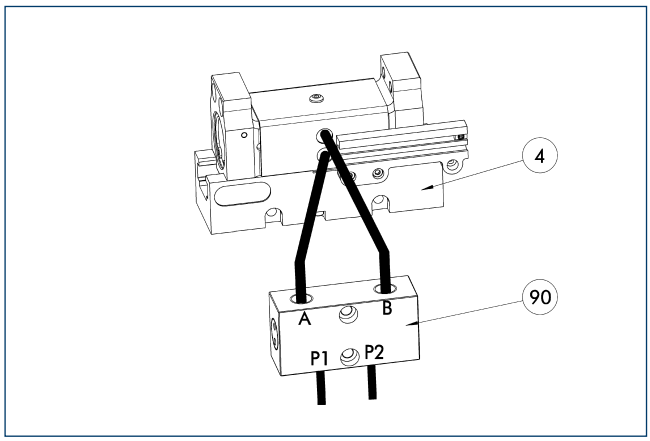

4 Gripper

90 SDV-P pressure maintenance valve

The SDV-P pressure maintenance valves ensure that the pressure in the piston chamber of pneumatic gripping, rotary, linear, and quick-change modules is maintained temporarily during an emergency stop.

Description	ID	
Pressure maintenance valve		
SDV-P 04	0403130	

RB 220 finger blanks

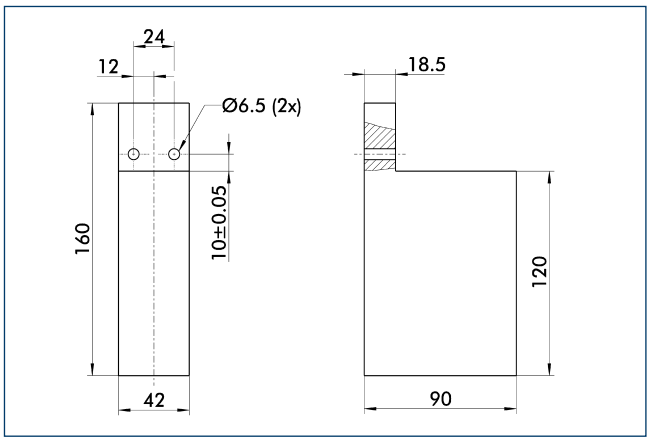

Finger blanks for customized subsequent machining.

Description	ID	Material	Scope of delivery
Finger blanks			
RB 220	0300286	Aluminum	2

Inductive proximity switches

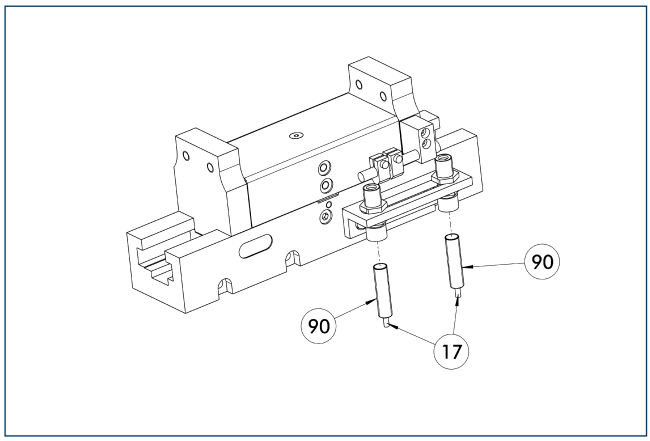

17 Cable outlet
90 IN ... sensor

Directly mounted limit position monitor.

Description	ID	Often combined
Inductive proximity switches		
IN 80-S-M12	0301578	
IN 80-S-M8	0301478	●
INK 80-S	0301550	
Cable extensions		
KV BG12-SG12 3P-0030-PNP	0301999	
KV BG12-SG12 3P-0060-PNP	0301998	
KV BW08-SG08 3P-0030-PNP	0301495	
KV BW08-SG08 3P-0100-PNP	0301496	
KV BW08-SG08 3P-0200-PNP	0301497	●
KV BW12-SG12 3P-0030-PNP	0301595	
KV BW12-SG12 3P-0100-PNP	0301596	
KV BW12-SG12 3P-0200-PNP	0301597	
Clip for plug / socket		
CLI-M12	0301464	
CLI-M8	0301463	
Connection cables		
KA BG08-L 3P-0300-PNP	0301622	●
KA BG08-L 3P-0500-PNP	0301623	
KA BG12-L 3P-0500-PNP	30016369	
KA BW08-L 3P-0300-PNP	0301594	
KA BW08-L 3P-0500-PNP	0301502	
KA BW12-L 3P-0300-PNP	0301503	
KA BW12-L 3P-0500-PNP	0301507	
Sensor distributor		
V2-M8	0301775	●
V2-M12	0301776	●
V4-M12	0301747	
V4-M8	0301746	
V8-M12	0301752	
V8-M8	0301751	

ⓘ Two sensors (closer/S) are required for each unit, plus extension cables as an option. Please note the minimum permitted bending radii for the sensor cables, which are generally 35 mm.

KGG 280

SCHUNK Grippers pneumatic | 2-Finger Parallel Grippers | Small Components Gripper

Gripping force, O.D. gripping

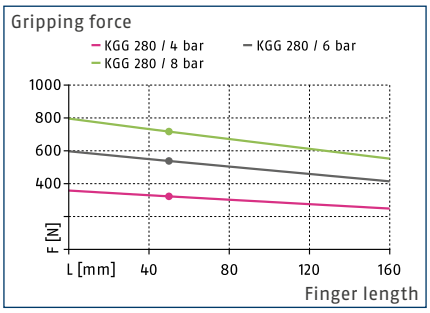

Gripping force, I.D. gripping

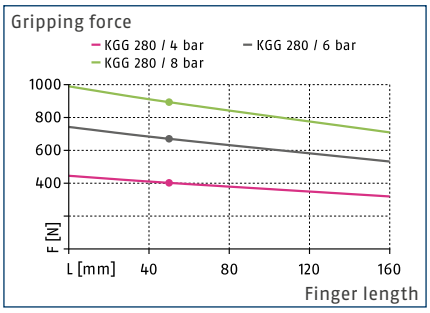

Finger load

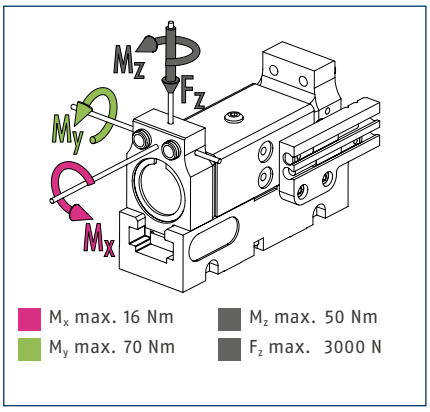

ⓘ The indicated moments and forces are static values, apply per base jaw and may occur simultaneously. M_y may arise in addition to the moment generated by the gripping force itself. If the max. permitted finger weight is exceeded, it is impreative to throttle the air supply so that the jaw movement occurs without any hitting or bouncing. Service life may be reduced.

Technical data

Description		KGG 280
ID		0340313
Stroke per jaw	[mm]	60
Closing- / opening force	[N]	540/670
Weight	[kg]	4.2
Recommended workpiece weight	[kg]	2.7
Fluid consumption per double stroke	[cm³]	170
min. / max. operating pressure	[bar]	2.5/8
Nominal operating pressure	[bar]	6
Closing- / opening time	[s]	0.29/0.25
max. permitted finger length	[mm]	160
max. permitted weight per finger	[kg]	2
IP class		30
min. / max. ambient temperature	[°C]	5/90
Repeat accuracy	[mm]	0.1

ⓘ Requirements on the levelness of the bolting surface (in relation to the entire bolting surface for the gripper):
- < 0.02 mm with an edge length of up to 100 mm
- < 0.05 mm with an edge length of 100 mm or longer

Main view

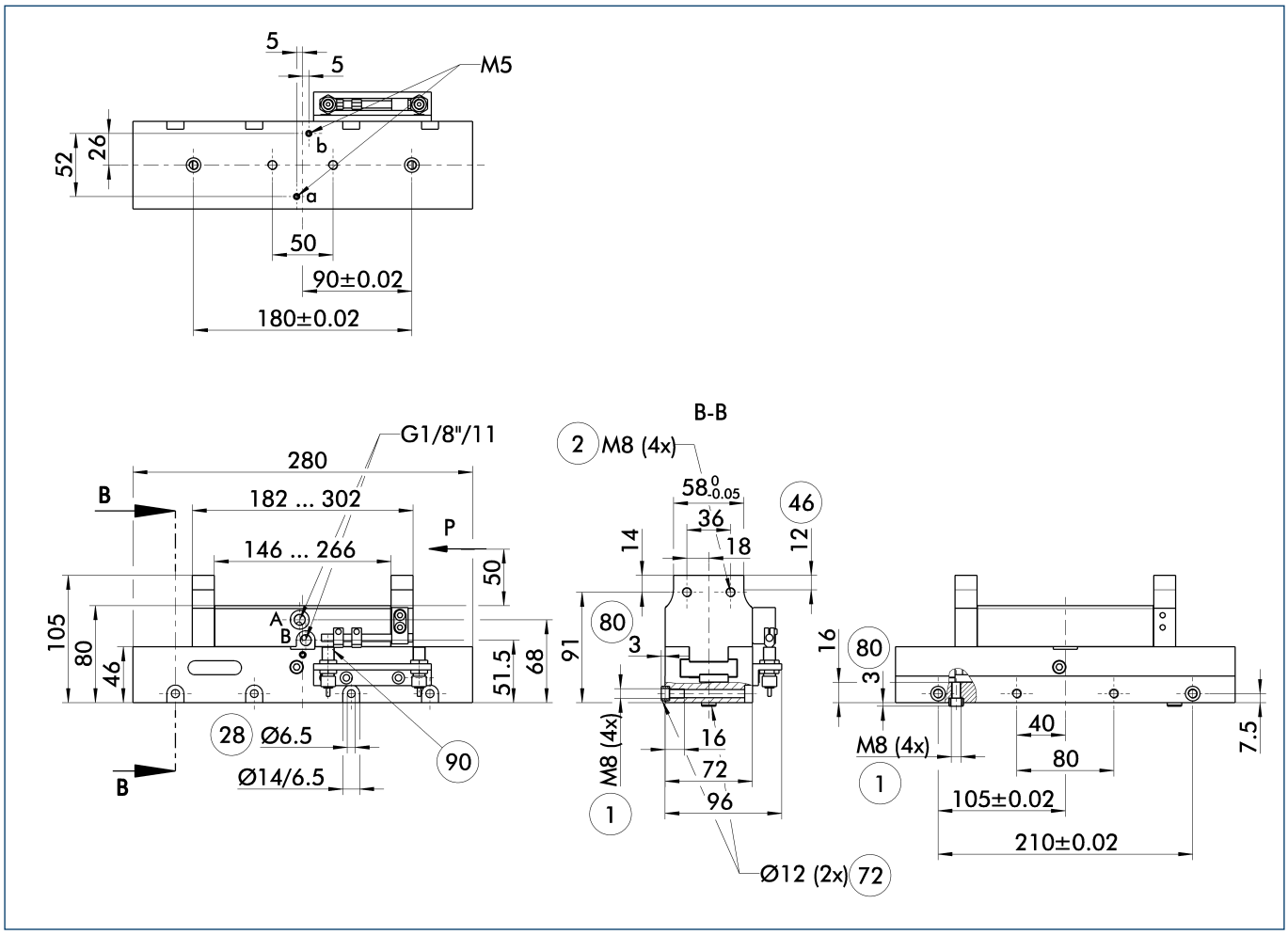

The drawing shows the gripper in the basic version with closed jaws, without dimensional consideration of the options described below.

ⓘ The SDV-P pressure maintenance valve can be used as a gripping force maintenance device (see catalog section on "Accessories").

A, a Main / direct connection, gripper opening

B, b Main / direct connection, gripper closing

(1) Gripper connection

(2) Finger connection

(28) Through-bore

(46) Fitting length

(72) Fit for centering sleeves

(80) Depth of the centering sleeve hole in the mating part

(90) IN ... sensor

Maximum permitted finger projection

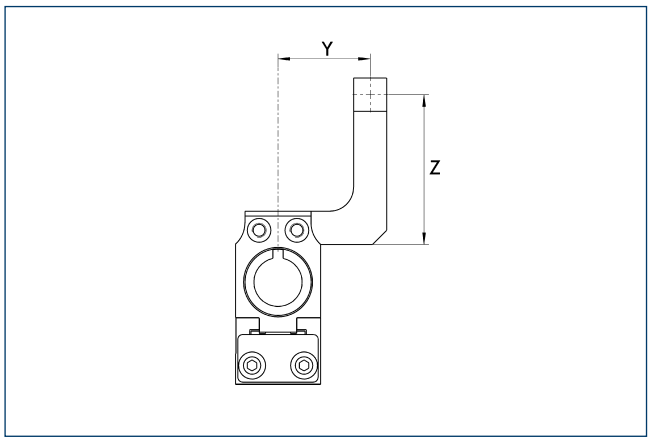

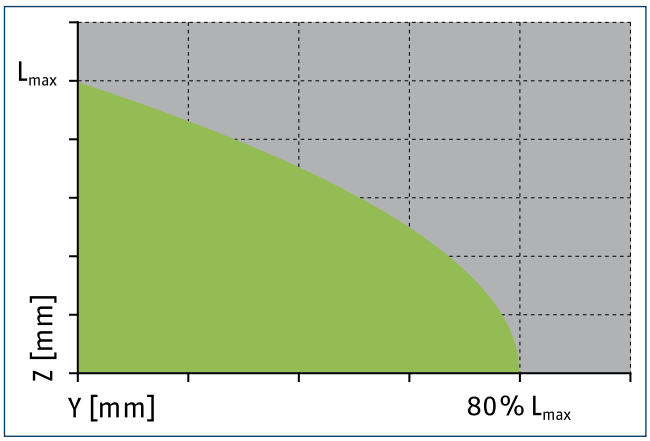

Permitted range

Inadmissible range

L_{max} is equivalent to the maximum permitted finger length, see the chart of technical specifications.

Hose-free direct connection M5

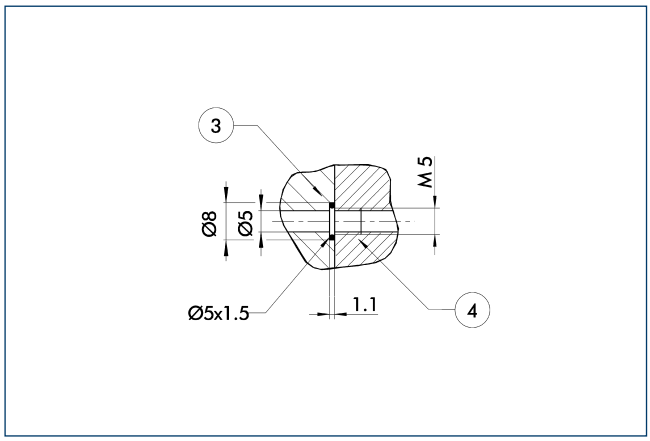

(3) Adapter (4) Gripper

The direct connection is used for supplying compressed air without hoses. Instead, the pressure medium is fed through bore-holes in the mounting plate.

Jaw design

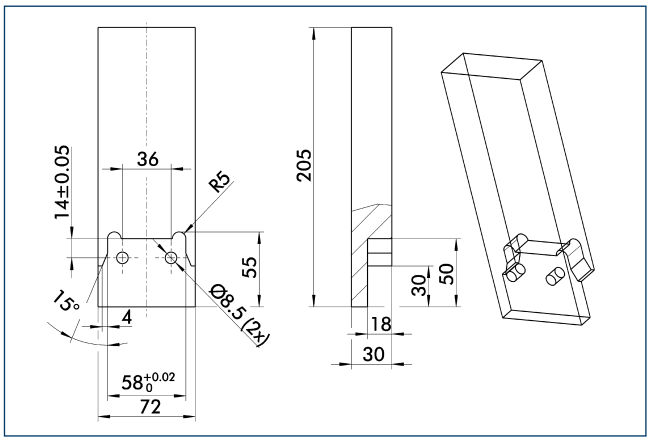

Suggestion for connection dimensions of the gripper fingers.

SDV-P pressure maintenance valve

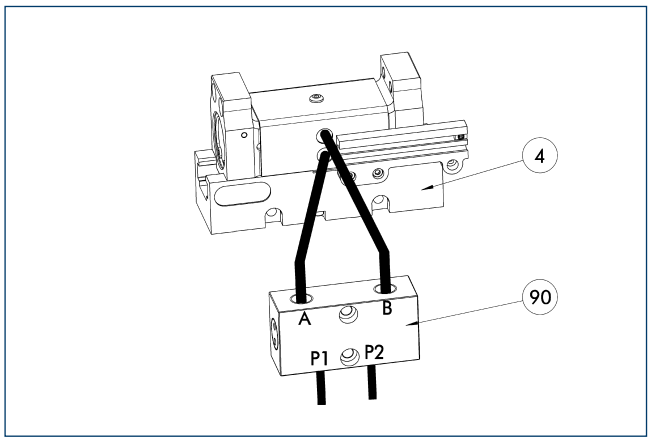

(4) Gripper (90) SDV-P pressure maintenance valve

The SDV-P pressure maintenance valves ensure that the pressure in the piston chamber of pneumatic gripping, rotary, linear, and quick-change modules is maintained temporarily during an emergency stop.

Description	ID	
Pressure maintenance valve		
SDV-P 04	0403130	

RB 280 finger blanks

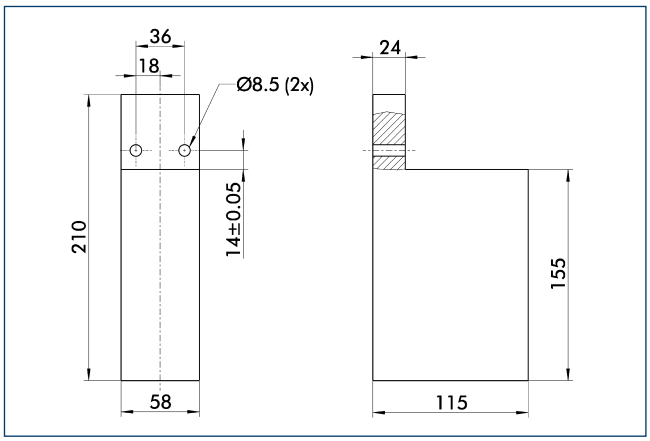

Finger blanks for customized subsequent machining.

Description	ID	Material	Scope of delivery
Finger blanks			
RB 280	0300287	Aluminum	2

Inductive proximity switches

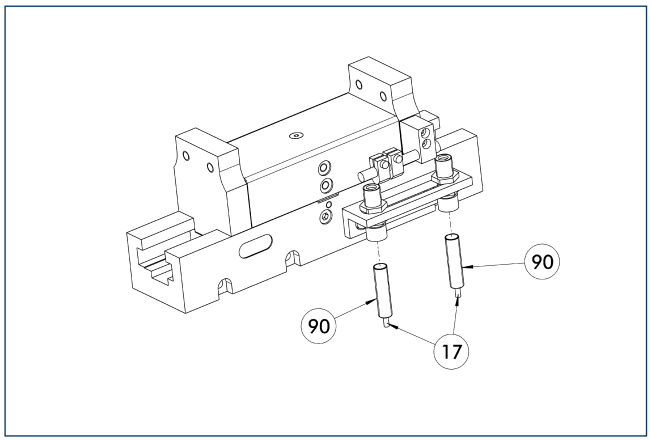

17 Cable outlet
90 IN ... sensor

Directly mounted limit position monitor.

Description	ID	Often combined
Inductive proximity switches		
IN 80-S-M12	0301578	
IN 80-S-M8	0301478	●
INK 80-S	0301550	
Cable extensions		
KV BG12-SG12 3P-0030-PNP	0301999	
KV BG12-SG12 3P-0060-PNP	0301998	
KV BW08-SG08 3P-0030-PNP	0301495	
KV BW08-SG08 3P-0100-PNP	0301496	
KV BW08-SG08 3P-0200-PNP	0301497	●
KV BW12-SG12 3P-0030-PNP	0301595	
KV BW12-SG12 3P-0100-PNP	0301596	
KV BW12-SG12 3P-0200-PNP	0301597	
Clip for plug / socket		
CLI-M12	0301464	
CLI-M8	0301463	
Connection cables		
KA BG08-L 3P-0300-PNP	0301622	●
KA BG08-L 3P-0500-PNP	0301623	
KA BG12-L 3P-0500-PNP	30016369	
KA BW08-L 3P-0300-PNP	0301594	
KA BW08-L 3P-0500-PNP	0301502	
KA BW12-L 3P-0300-PNP	0301503	
KA BW12-L 3P-0500-PNP	0301507	
Sensor distributor		
V2-M8	0301775	●
V2-M12	0301776	●
V4-M12	0301747	
V4-M8	0301746	
V8-M12	0301752	
V8-M8	0301751	

ⓘ Two sensors (closer/S) are required for each unit, plus extension cables as an option. Please note the minimum permitted bending radii for the sensor cables, which are generally 35 mm.

Compact. Flexible. Simple.
RH Small Components Gripper

The RH series is a cost-efficient gripping system, which is particularly suitable for light applications.

Field of Application

Use in clean environmental conditions (e.g. assembly or packaging areas) with low process forces.

Advantages – Your benefit

Economical gripper series for simple applications with low loads in clean environments, particularly recommended for low-budget gripping applications

Maintenance-free with low weight

Sizes	Weight	Gripping force	Stroke per jaw	Workpiece weight
Quantity: 10	0.04 .. 1.1 kg	13 .. 460 N	2.5 .. 40 mm	0.065 .. 2.3 kg

Functional Description

RH grippers work with pneumatic pistons, which produce a synchronized motion due to kinematics that vary depending on the type.

① **RH 901**
2-Finger Small Components Grippers

② **RH 905**
2-Finger Small Components Gripper

③ **RH 806**
Parallel Gripper with dirt cover

④ **RH 9010**
2-Finger Long-Stroke Gripper

⑤ **RH 925**
2-Finger Universal Gripper

CAD data, operating manuals and other current product documents are available at **www.schunk.com**

General Notes about the Series

Operating principle: Wedge-hook kinematics

Actuation: pneumatic, with filtered compressed air as per DIN ISO 8573-1: 7 4 4

Warranty: 24 months (details, general terms and conditions and operating manuals can be downloaded at www.schunk.com)

Scope of delivery: Centering elements, assembly and operating instruction with manufacturer's declaration.

Gripping force: is the arithmetic total of the gripping force applied to each gripper jaw at distance P (see illustration).

Finger length: is measured from the upper edge of the gripper housing in the direction of the main axis. The breach of the max. permitted finger length can bring higher abrasion. The maximum permissible finger length applies up to the nominal operating pressure. With higher pressures, the finger length must be reduced proportionally to the nominal operating pressure.

Repeat accuracy: is defined as the spread of the limit position after 100 consecutive strokes.

Workpiece weight: is calculated for a force-fit connection with a coefficient of friction of 0.1 and a safety factor of 2 against slippage of the workpiece on acceleration due to gravity g. Considerably heavier workpiece weights are permitted with form-fit gripping.

Closing and opening times: are purely the times that the base jaws or fingers are in motion. Valve switching times, hose filling times or PLC reaction times are not included in the above times and must be taken into consideration when determining cycle times.

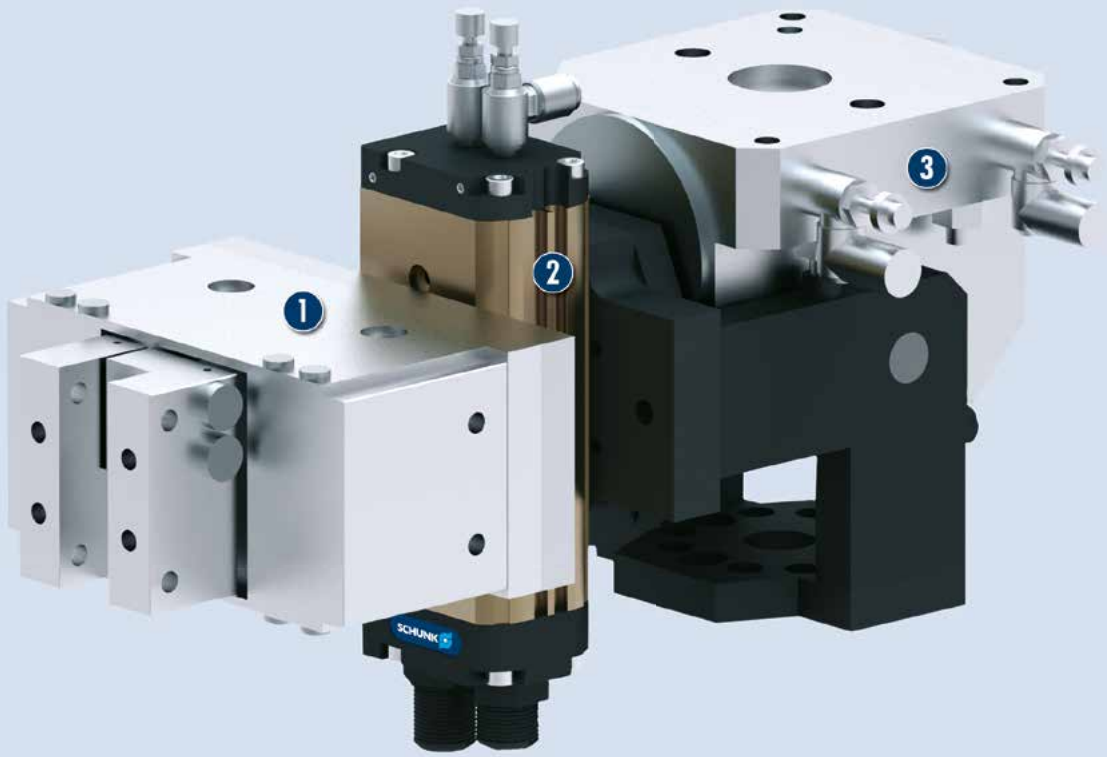

Application example

Transfer station with simultaneous 90° reorientation of the workpiece in two axes

1. RH Small Components Gripper
2. SRU-mini Miniature Rotary Unit
3. SKE Rotary Actuator

SCHUNK offers more ...

The following components make the product RH even more productive – the suitable addition for the highest functionality, flexibility, reliability, and controlled production.

Fittings

Sensor System

Sensor Cables

SDV-P Pressure Maintenance Valve

Gripper Pads

Plastic Inserts

ⓘ Further information regarding the products can be found on the following product pages or at www.schunk.com. Please contact us for further information: SCHUNK technical hotline +49-7133-103-2696

Options and special Information

In order to keep the manufacturing costs and thus the sales prices low, the RH series is designed for low-cost production. Therefore repair works are generally not economically feasible.
Anti-corrosion version K: for use in corrosion-inducing atmospheres
Precision version P: for the highest accuracy

RH 901 K

SCHUNK Grippers pneumatic | 2-Finger Parallel Grippers | Small Components Gripper

Sensor switching characteristics

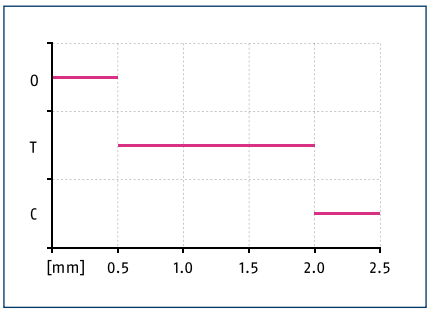

Grippers with an integrated photo sensor indicate two of three positions. (O = open, T = gripped, C = closed)

Finger load

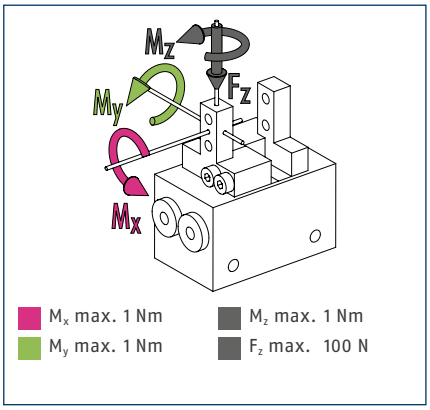

ⓘ The indicated moments and forces are static values, apply per base jaw and may occur simultaneously. M_y may arise in addition to the moment generated by the gripping force itself. If the max. permitted finger weight is exceeded, it is impreative to throttle the air supply so that the jaw movement occurs without any hitting or bouncing. Service life may be reduced.

Technical data

Description		RH 901 K	RH 901 K-FS OC 5	RH 901 K-FS OT 5	RH 901K-FS TC 5
ID		0360131	0360132	0360133	0360134
Stroke per jaw	[mm]	2.5	2.5	2.5	2.5
Closing- / opening force	[N]	13/13	13/13	13/13	13/13
Integrated monitoring		0	1	1	1
Weight	[kg]	0.04	0.04	0.04	0.04
Recommended workpiece weight	[kg]	0.065	0.065	0.065	0.065
Fluid consumption per double stroke	[cm³]	1	1	1	1
min. / max. operating pressure	[bar]	2/7	2/7	2/7	2/7
Nominal operating pressure	[bar]	6	6	6	6
Closing- / opening time	[s]	0.06/0.06	0.06/0.06	0.06/0.06	0.06/0.06
max. permitted finger length	[mm]	35	35	35	35
max. permitted weight per finger	[kg]	0.02	0.02	0.02	0.02
IP class		30	30	30	30
min. / max. ambient temperature	[°C]	5/60	5/60	5/60	5/60
Repeat accuracy	[mm]	0.01	0.01	0.01	0.01

Main view

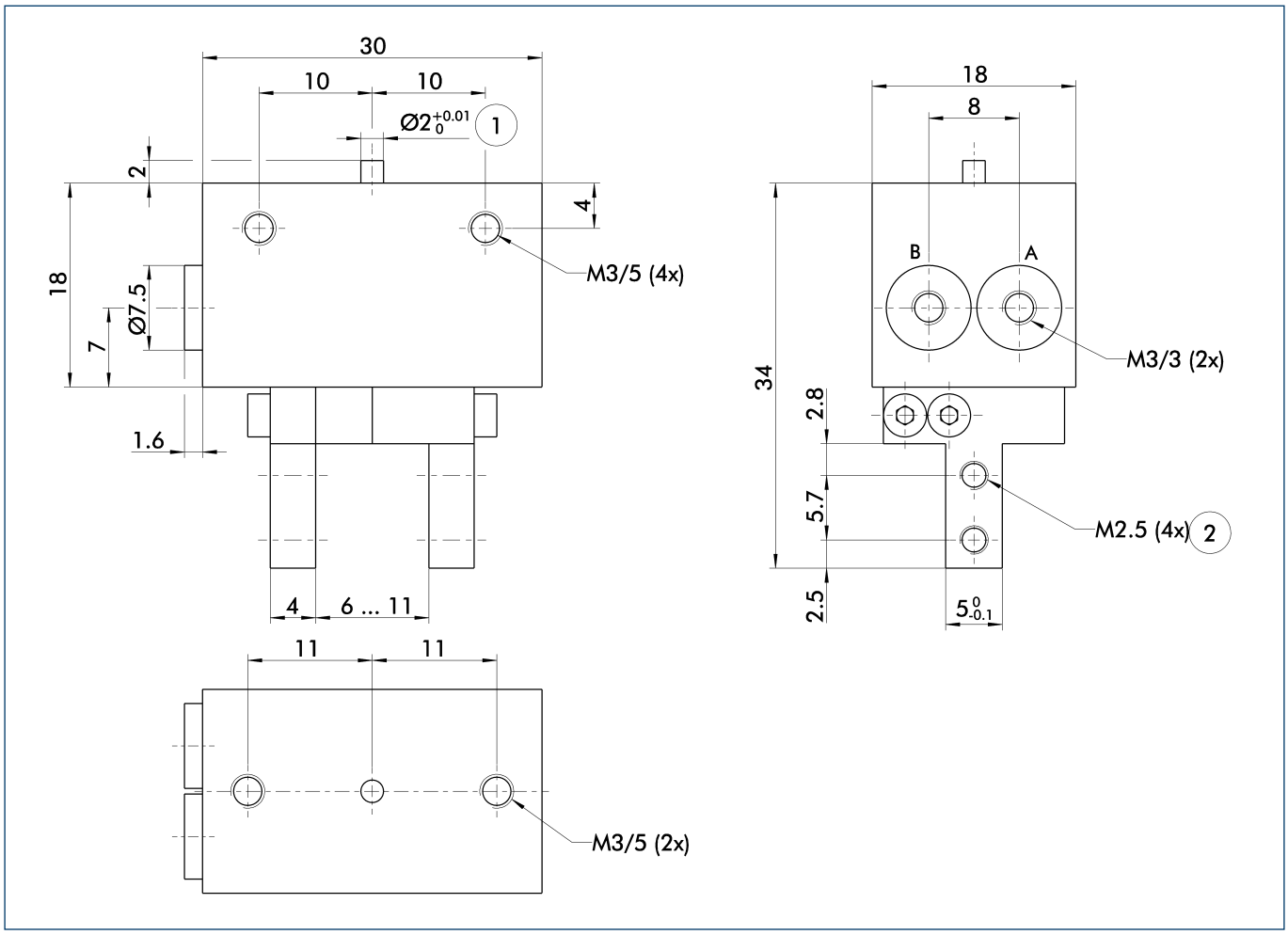

The drawing shows the gripper in the basic version with closed jaws, without dimensional consideration of the options described below.

ⓘ The SDV-P pressure maintenance valve can be used as a gripping force maintenance device (see catalog section on "Accessories").

A, a Main / direct connection, gripper opening

B, b Main / direct connection, gripper closing

(1) Gripper connection

(2) Finger connection

Micro photo sensor

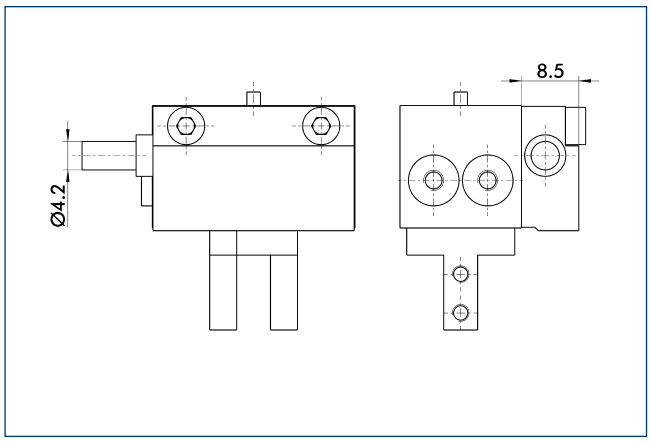

Grippers with an integrated photo sensor indicate two of three positions. (O = open, T = gripped, C = closed)

Amplifier

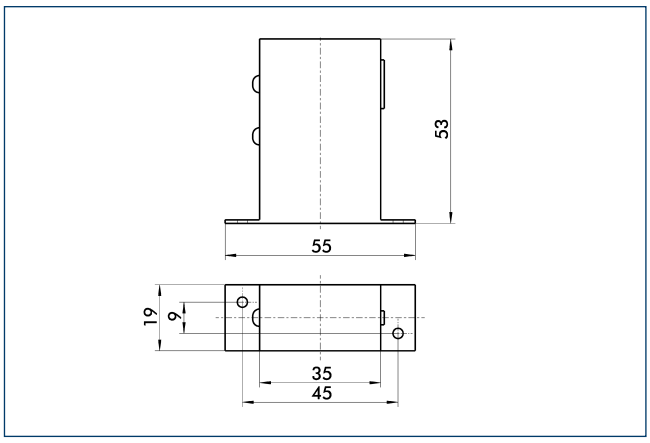

Dimensions of the amplifier for the photo sensor (FS). The amplifier is included in the scope of delivery of grippers in FS version.

RH 901 K-ST10

SCHUNK Grippers pneumatic | 2-Finger Parallel Grippers | Small Components Gripper

Sensor switching characteristics

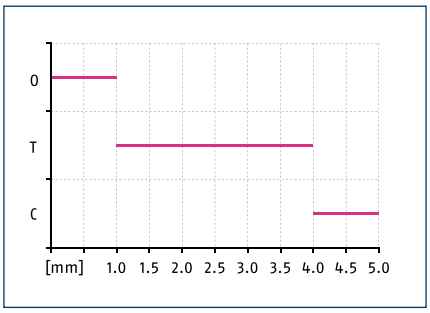

Grippers with an integrated photo sensor indicate two of three positions. (O = open, T = gripped, C = closed)

Finger load

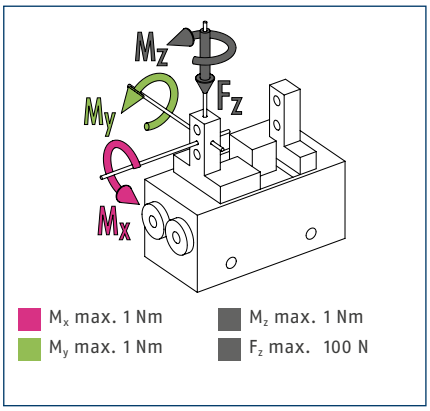

ⓘ The indicated moments and forces are static values, apply per base jaw and may occur simultaneously. M_y may arise in addition to the moment generated by the gripping force itself. If the max. permitted finger weight is exceeded, it is impreative to throttle the air supply so that the jaw movement occurs without any hitting or bouncing. Service life may be reduced.

Technical data

Description		RH 901 K-ST10	RH 901 K-ST10-FS OC 5	RH 901 K-ST10-FS OT 5	RH 901 K-ST10-FS TC 5
ID		0360164	0360166	0360167	0360168
Stroke per jaw	[mm]	5	5	5	5
Closing- / opening force	[N]	13/13	13/13	13/13	13/13
Integrated monitoring		0	1	1	1
Weight	[kg]	0.04	0.04	0.04	0.04
Recommended workpiece weight	[kg]	0.065	0.065	0.065	0.065
Fluid consumption per double stroke	[cm³]	1	1	1	1
min. / max. operating pressure	[bar]	2/7	2/7	2/7	2/7
Nominal operating pressure	[bar]	6	6	6	6
Closing- / opening time	[s]	0.13/0.13	0.13/0.13	0.13/0.13	0.13/0.13
max. permitted finger length	[mm]	35	35	35	35
max. permitted weight per finger	[kg]	0.02	0.02	0.02	0.02
IP class		30	30	30	30
min. / max. ambient temperature	[°C]	5/60	5/60	5/60	5/60
Repeat accuracy	[mm]	0.01	0.01	0.01	0.01

Main view

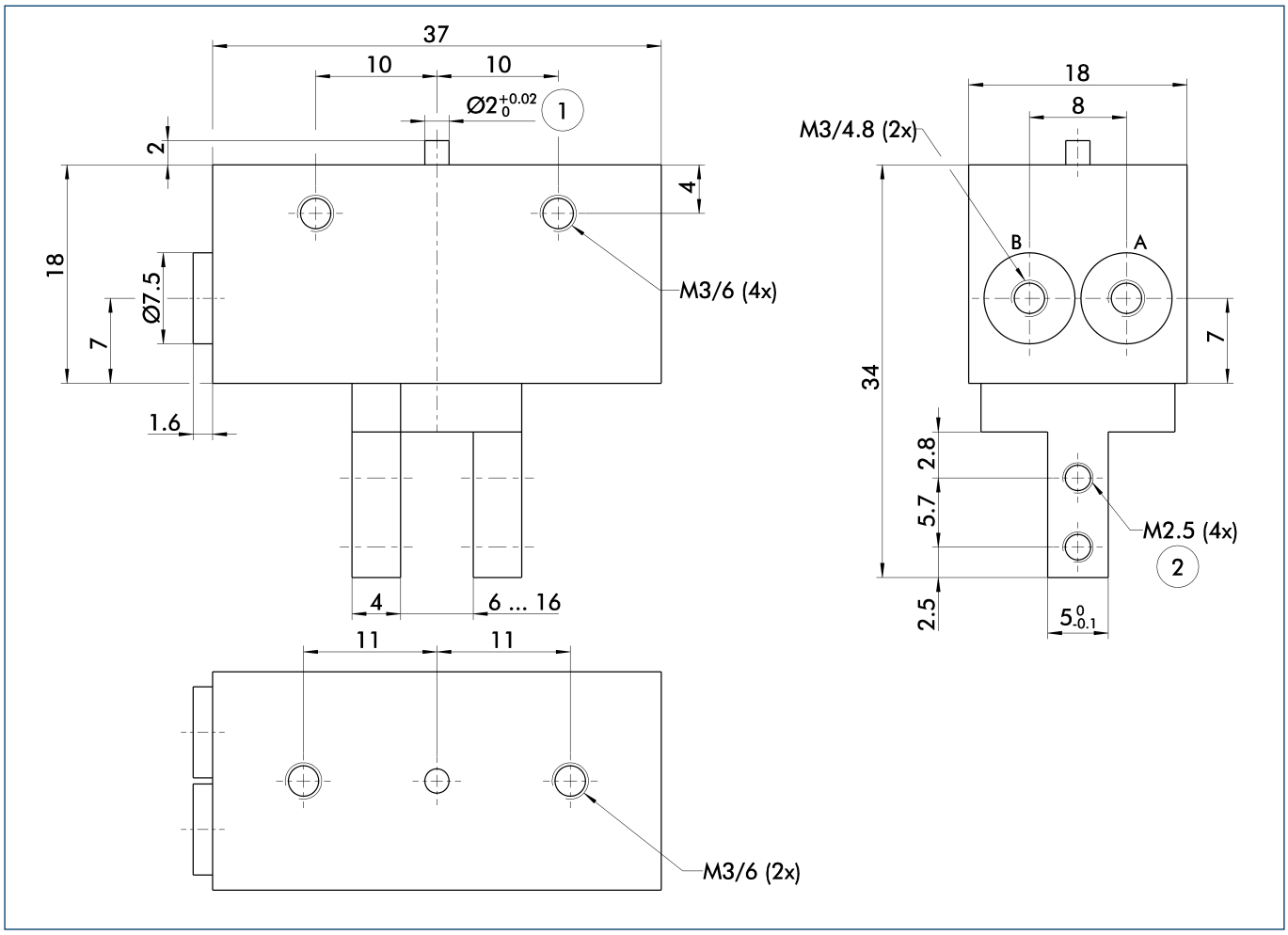

The drawing shows the gripper in the basic version with closed jaws, without dimensional consideration of the options described below.

ⓘ The SDV-P pressure maintenance valve can be used as a gripping force maintenance device (see catalog section on "Accessories").

A, a Main / direct connection, gripper opening

B, b Main / direct connection, gripper closing

① Gripper connection
② Finger connection

Micro photo sensor

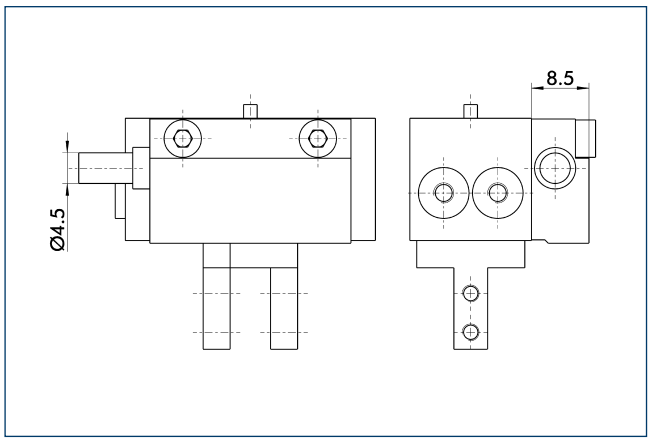

Grippers with an integrated photo sensor indicate two of three positions. (O = open, T = gripped, C = closed)

Amplifier

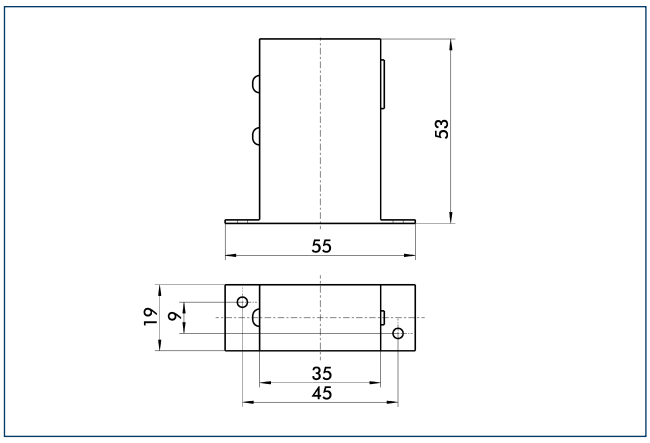

Dimensions of the amplifier for the photo sensor (FS). The amplifier is included in the scope of delivery of grippers in FS version.

RH 905

SCHUNK Grippers pneumatic | 2-Finger Parallel Grippers | Small Components Gripper

Sensor switching characteristics

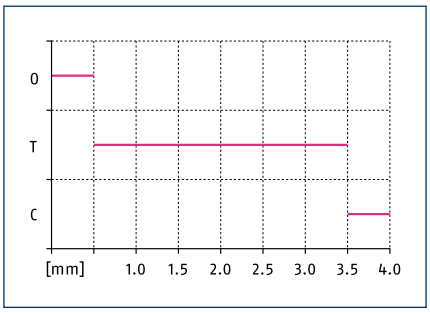

Grippers with an integrated photo sensor indicate two of three positions. (O = open, T = gripped, C = closed)

Finger load

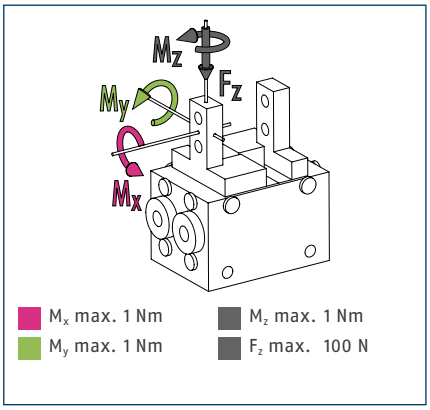

ⓘ The indicated moments and forces are static values, apply per base jaw and may occur simultaneously. M_y may arise in addition to the moment generated by the gripping force itself. If the max. permitted finger weight is exceeded, it is impreative to throttle the air supply so that the jaw movement occurs without any hitting or bouncing. Service life may be reduced.

Technical data

Description		RH 905	RH 905-FS OC 5	RH 905-FS OT 5	RH 905-FS TC 5
ID		0360110	0360257	0360258	0360259
Stroke per jaw	[mm]	4	4	4	4
Closing- / opening force	[N]	44/44	44/44	44/44	44/44
Integrated monitoring		0	1	1	1
Weight	[kg]	0.09	0.09	0.09	0.09
Recommended workpiece weight	[kg]	0.22	0.22	0.22	0.22
Fluid consumption per double stroke	[cm³]	1	1	1	1
min. / max. operating pressure	[bar]	2/7	2/7	2/7	2/7
Nominal operating pressure	[bar]	6	6	6	6
Closing- / opening time	[s]	0.13/0.13	0.13/0.13	0.13/0.13	0.13/0.13
max. permitted finger length	[mm]	35	35	35	35
max. permitted weight per finger	[kg]	0.04	0.04	0.04	0.04
IP class		30	30	30	30
min. / max. ambient temperature	[°C]	5/60	5/60	5/60	5/60
Repeat accuracy	[mm]	0.01	0.01	0.01	0.01

Main view

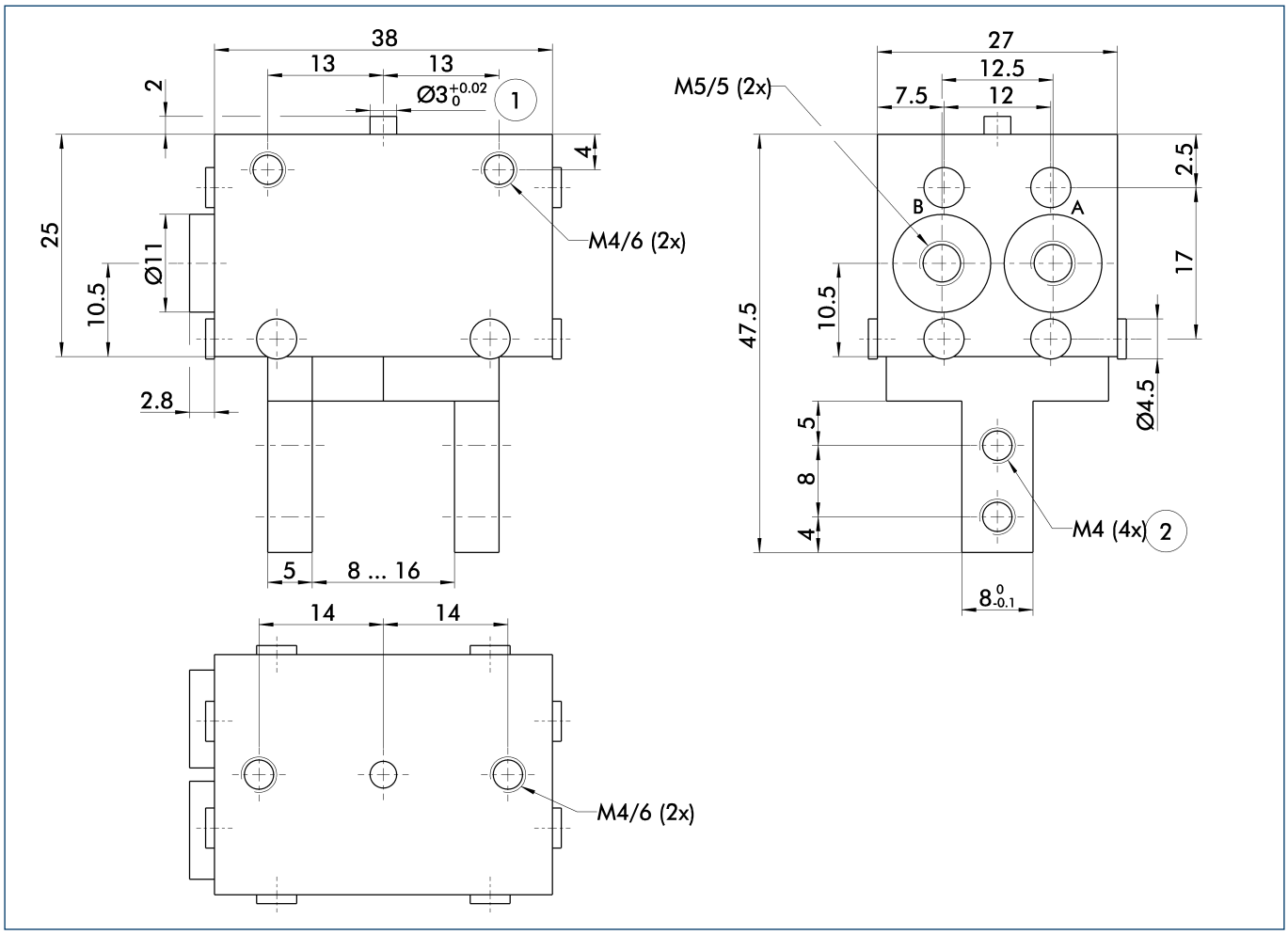

The drawing shows the gripper in the basic version with closed jaws, without dimensional consideration of the options described below.

ⓘ The SDV-P pressure maintenance valve can be used as a gripping force maintenance device (see catalog section on "Accessories").

A, a Main / direct connection, gripper opening

B, b Main / direct connection, gripper closing

(1) Gripper connection
(2) Finger connection

Micro photo sensor

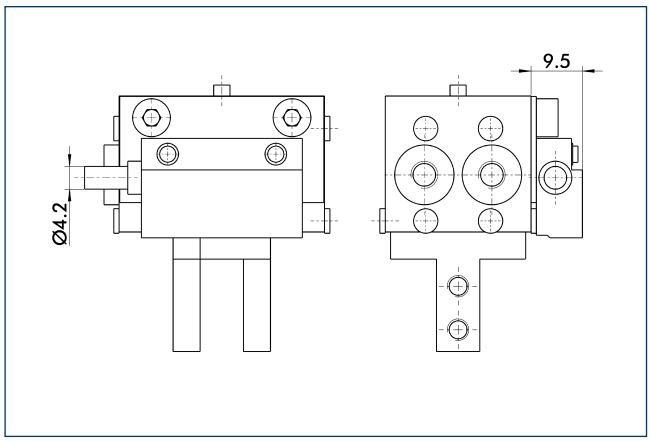

Grippers with an integrated photo sensor indicate two of three positions. (O = open, T = gripped, C = closed)

Amplifier

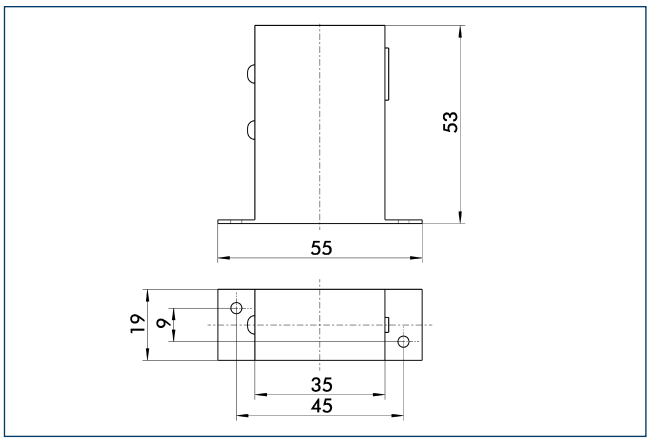

Dimensions of the amplifier for the photo sensor (FS). The amplifier is included in the scope of delivery of grippers in FS version.

Finger load

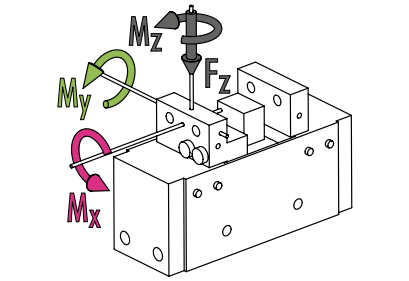

M_x max. 1.5 Nm
M_y max. 1.5 Nm
M_z max. 1.5 Nm
F_z max. 200 N

ⓘ The indicated moments and forces are static values, apply per base jaw and may occur simultaneously. M_y may arise in addition to the moment generated by the gripping force itself. If the max. permitted finger weight is exceeded, it is impreative to throttle the air supply so that the jaw movement occurs without any hitting or bouncing. Service life may be reduced.

Technical data

Description		RH 907
ID		0360200
Stroke per jaw	[mm]	8
Closing- / opening force	[N]	80/80
Integrated monitoring		0
Weight	[kg]	0.17
Recommended workpiece weight	[kg]	0.4
Fluid consumption per double stroke	[cm³]	2
min. / max. operating pressure	[bar]	2/7
Nominal operating pressure	[bar]	6
Closing- / opening time	[s]	0.17/0.17
max. permitted finger length	[mm]	20
max. permitted weight per finger	[kg]	0.05
IP class		30
min. / max. ambient temperature	[°C]	5/60
Repeat accuracy	[mm]	0.01

Main view

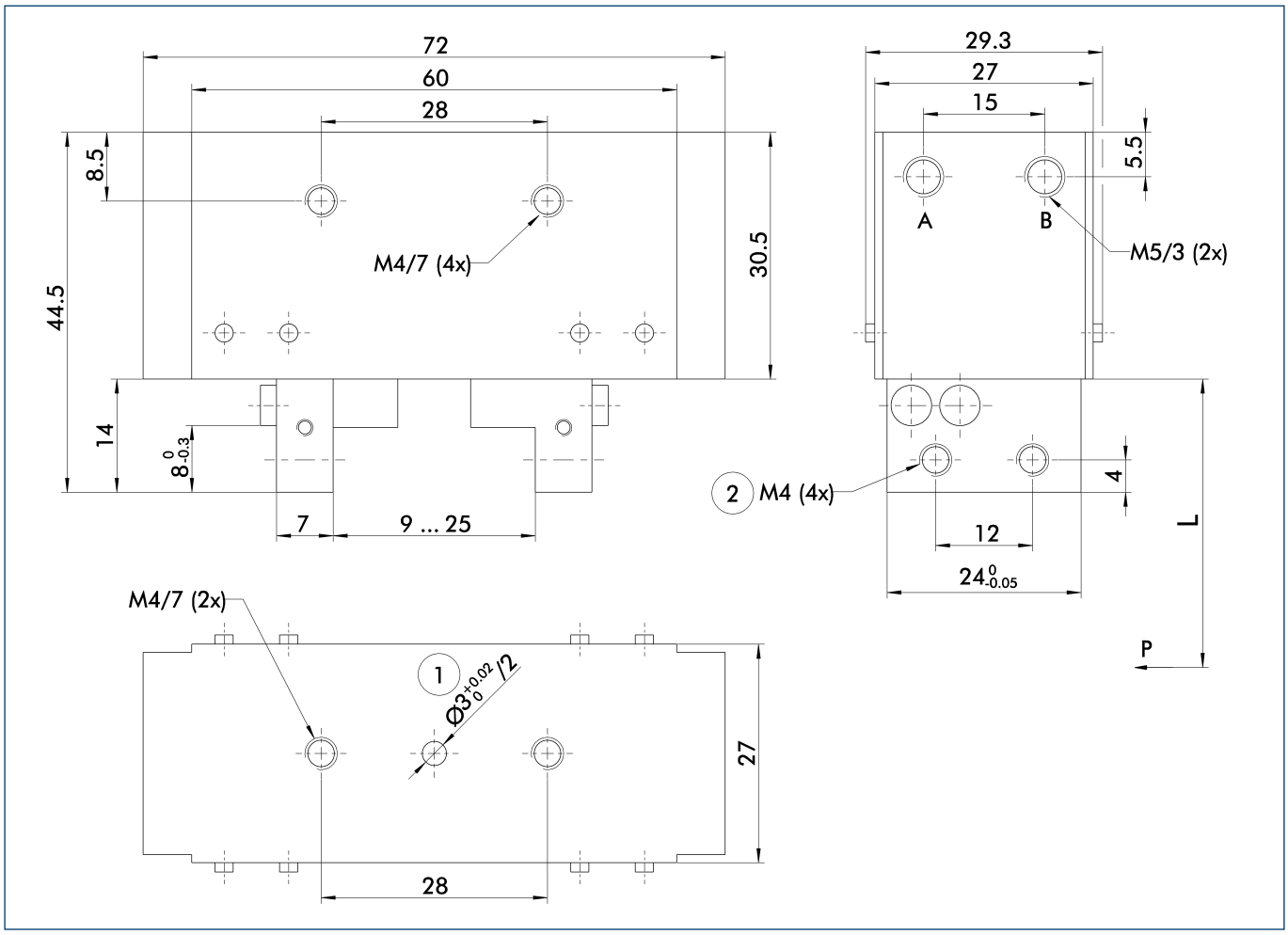

The drawing shows the gripper in the basic version with closed jaws, without dimensional consideration of the options described below.

ⓘ The SDV-P pressure maintenance valve can be used as a gripping force maintenance device (see catalog section on "Accessories").

A, a Main / direct connection, gripper opening

B, b Main / direct connection, gripper closing

(1) Gripper connection
(2) Finger connection

Mounting kit for proximity switch

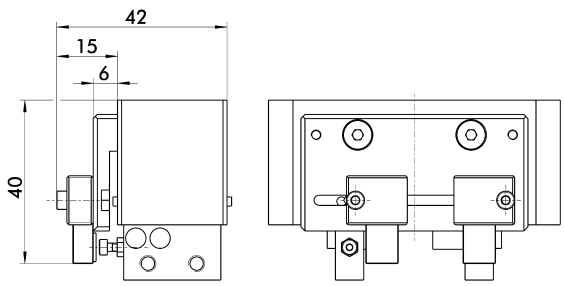

Limit position monitor can be mounted with mounting kit.

Description	ID	
Mounting kit for proximity switch		
AS-RH 907	0360206	

ⓘ This mounting kit needs to be ordered optionally as an accessory.

Inductive proximity switches

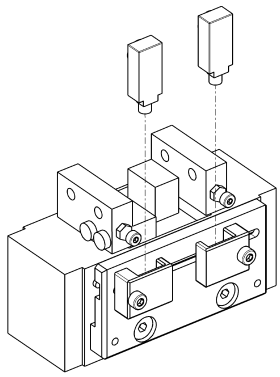

Directly mounted limit position monitor.

Description	ID	Often combined
Inductive proximity switches		
IN 8-S-M12	0301581	
IN 8-S-M8	0301481	
INK 8-S	9700052	
Cable extensions		
KV BG12-SG12 3P-0030-PNP	0301999	
KV BG12-SG12 3P-0060-PNP	0301998	
KV BW08-SG08 3P-0030-PNP	0301495	
KV BW08-SG08 3P-0100-PNP	0301496	
KV BW08-SG08 3P-0200-PNP	0301497	●
KV BW12-SG12 3P-0030-PNP	0301595	
KV BW12-SG12 3P-0100-PNP	0301596	
KV BW12-SG12 3P-0200-PNP	0301597	
Clip for plug / socket		
CLI-M12	0301464	
CLI-M8	0301463	
Connection cables		
KA BG08-L 3P-0300-PNP	0301622	●
KA BG08-L 3P-0500-PNP	0301623	
KA BG12-L 3P-0500-PNP	30016369	
KA BW08-L 3P-0300-PNP	0301594	
KA BW08-L 3P-0500-PNP	0301502	
KA BW12-L 3P-0300-PNP	0301503	
KA BW12-L 3P-0500-PNP	0301507	
Sensor distributor		
V2-M8	0301775	●
V2-M12	0301776	●
V4-M12	0301747	
V4-M8	0301746	
V8-M12	0301752	
V8-M8	0301751	

ⓘ Two sensors (closer/S) are required for each unit, plus extension cables as an option. Please note the minimum permitted bending radii for the sensor cables, which are generally 35 mm.

RH 925

SCHUNK Grippers pneumatic | 2-Finger Parallel Grippers | Small Components Gripper

Finger load

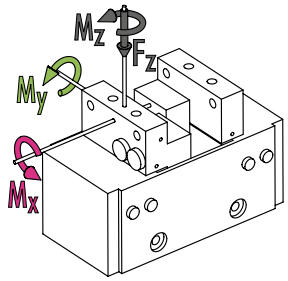

M_x max. 19 Nm
M_y max. 19 Nm
M_z max. 19 Nm
F_z max. 390 N

ⓘ The indicated moments and forces are static values, apply per base jaw and may occur simultaneously. M_y may arise in addition to the moment generated by the gripping force itself. If the max. permitted finger weight is exceeded, it is impreative to throttle the air supply so that the jaw movement occurs without any hitting or bouncing. Service life may be reduced.

Technical data

Description		RH 925	RH 925 PX
ID		0360300	0360301
Stroke per jaw	[mm]	12	12
Closing- / opening force	[N]	270/270	270/270
Integrated monitoring		0	0
Weight	[kg]	0.55	0.55
Recommended workpiece weight	[kg]	1.3	1.3
Fluid consumption per double stroke	[cm³]	8	8
min. / max. operating pressure	[bar]	2/7	2/7
Nominal operating pressure	[bar]	6	6
Closing- / opening time	[s]	0.5/0.5	0.5/0.5
max. permitted finger length	[mm]	30	30
max. permitted weight per finger	[kg]	0.08	0.08
IP class		30	30
min. / max. ambient temperature	[°C]	5/60	5/60
Repeat accuracy	[mm]	0.02	0.02

Main view

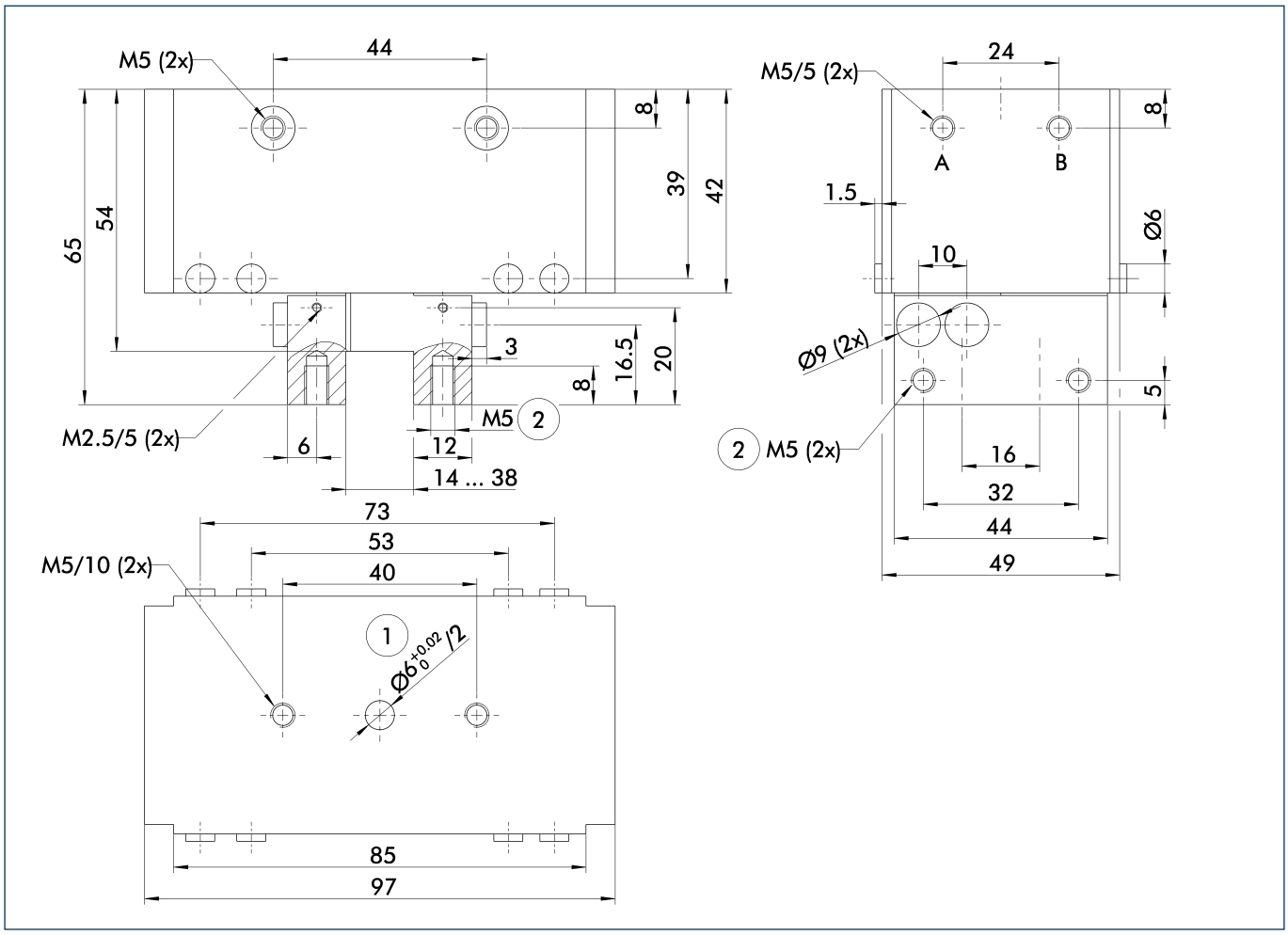

The drawing shows the gripper in the basic version with closed jaws, without dimensional consideration of the options described below.

ⓘ The SDV-P pressure maintenance valve can be used as a gripping force maintenance device (see catalog section on "Accessories").

A, a Main / direct connection, gripper opening

B, b Main / direct connection, gripper closing

(1) Gripper connection

(2) Finger connection

Attachment to the proximity switch

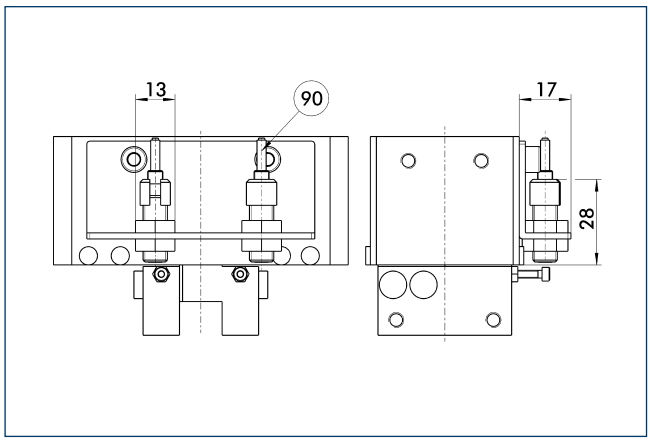

(90) IN ... sensor

For PX versions, the mounting kit for attachment is delivered with the proximity switch.

Inductive proximity switches

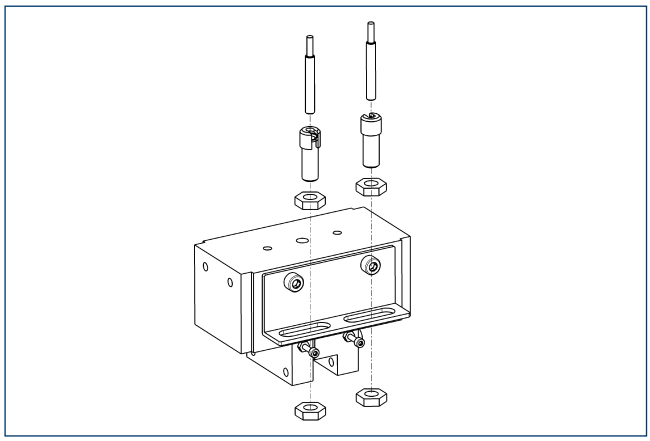

Limit position monitors can only be mounted directly with “PX Version”.

Description	ID	Often combined
Inductive proximity switches		
IN 50-S-M12	0301575	●
INK 50-S	0301560	
Cable extensions		
KV BG12-SG12 3P-0030-PNP	0301999	
KV BG12-SG12 3P-0060-PNP	0301998	
KV BW12-SG12 3P-0030-PNP	0301595	
KV BW12-SG12 3P-0100-PNP	0301596	
KV BW12-SG12 3P-0200-PNP	0301597	
Clip for plug / socket		
CLI-M12	0301464	
Connection cables		
KA BG12-L 3P-0500-PNP	30016369	
KA BW12-L 3P-0300-PNP	0301503	
KA BW12-L 3P-0500-PNP	0301507	
Sensor distributor		
V2-M12	0301776	●
V4-M12	0301747	
V8-M12	0301752	

ⓘ Two sensors (closer/S) are required for each unit, plus extension cables as an option. Please note the minimum permitted bending radii for the sensor cables, which are generally 35 mm.

RH 940

SCHUNK Grippers pneumatic | 2-Finger Parallel Grippers | Small Components Gripper

Finger load

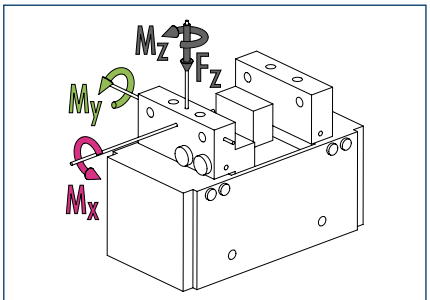

M_x max. 39.2 Nm
M_z max. 39.2 Nm
M_y max. 39.2 Nm
F_z max. 780 N

ⓘ The indicated moments and forces are static values, apply per base jaw and may occur simultaneously. M_y may arise in addition to the moment generated by the gripping force itself. If the max. permitted finger weight is exceeded, it is impreative to throttle the air supply so that the jaw movement occurs without any hitting or bouncing. Service life may be reduced.

Technical data

Description		RH 940	RH 940 PX
ID		0360310	0360311
Stroke per jaw	[mm]	15	15
Closing- / opening force	[N]	460/460	460/460
Integrated monitoring		0	0
Weight	[kg]	1.1	1.1
Recommended workpiece weight	[kg]	2.3	2.3
Fluid consumption per double stroke	[cm³]	14	14
min. / max. operating pressure	[bar]	2/7	2/7
Nominal operating pressure	[bar]	6	6
Closing- / opening time	[s]	0.5/0.5	0.5/0.5
max. permitted finger length	[mm]	50	50
max. permitted weight per finger	[kg]	0.13	0.13
IP class		30	30
min. / max. ambient temperature	[°C]	5/60	5/60
Repeat accuracy	[mm]	0.02	0.02

Main view

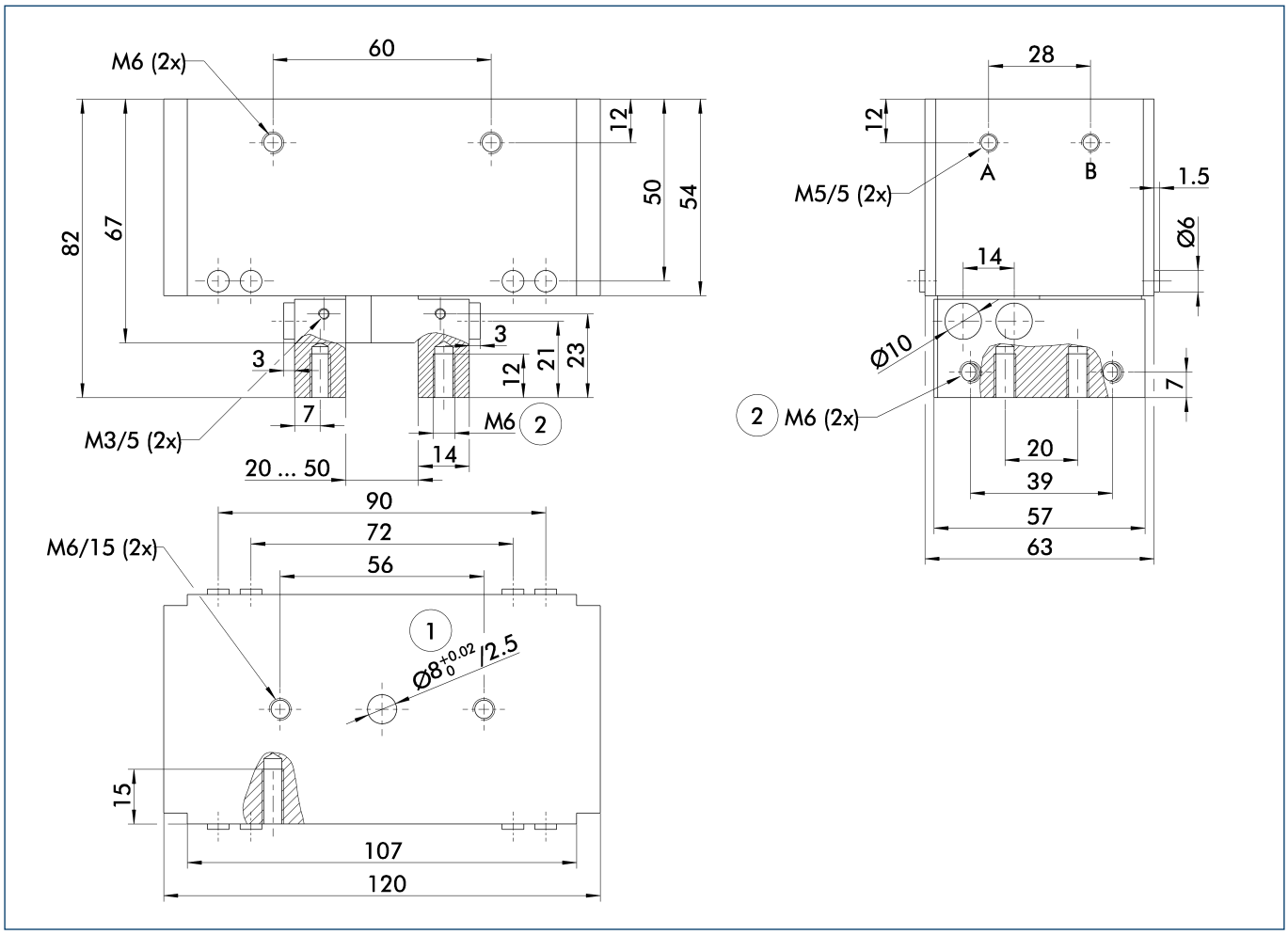

The drawing shows the gripper in the basic version with closed jaws, without dimensional consideration of the options described below.

ⓘ The SDV-P pressure maintenance valve can be used as a gripping force maintenance device (see catalog section on "Accessories").

A, a Main / direct connection, gripper opening

B, b Main / direct connection, gripper closing

(1) Gripper connection

(2) Finger connection

Attachment to the proximity switch

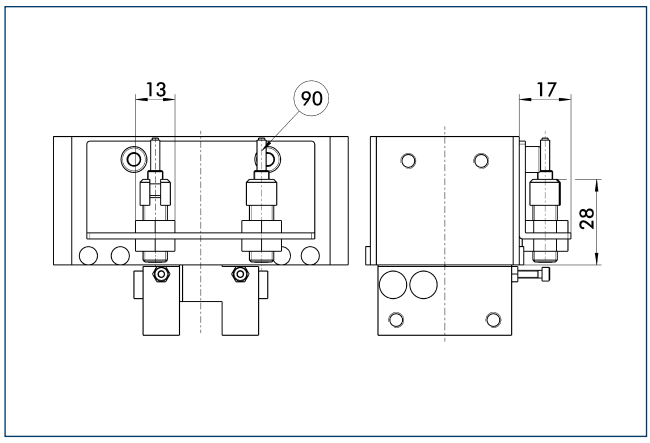

(90) IN ... sensor

For PX versions, the mounting kit for attachment is delivered with the proximity switch.

Inductive proximity switches

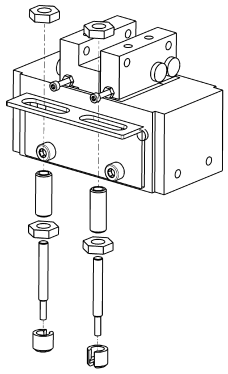

Limit position monitors can only be mounted directly with “PX Version”.

Description	ID	Often combined
Inductive proximity switches		
IN 50-S-M12	0301575	●
INK 50-S	0301560	
Cable extensions		
KV BG12-SG12 3P-0030-PNP	0301999	
KV BG12-SG12 3P-0060-PNP	0301998	
KV BW12-SG12 3P-0030-PNP	0301595	
KV BW12-SG12 3P-0100-PNP	0301596	
KV BW12-SG12 3P-0200-PNP	0301597	
Clip for plug / socket		
CLI-M12	0301464	
Connection cables		
KA BG12-L 3P-0500-PNP	30016369	
KA BW12-L 3P-0300-PNP	0301503	
KA BW12-L 3P-0500-PNP	0301507	
Sensor distributor		
V2-M12	0301776	●
V4-M12	0301747	
V8-M12	0301752	

ⓘ Two sensors (closer/S) are required for each unit, plus extension cables as an option. Please note the minimum permitted bending radii for the sensor cables, which are generally 35 mm.

RH 9010

SCHUNK Grippers pneumatic | 2-Finger Parallel Grippers | Small Components Gripper

Finger load

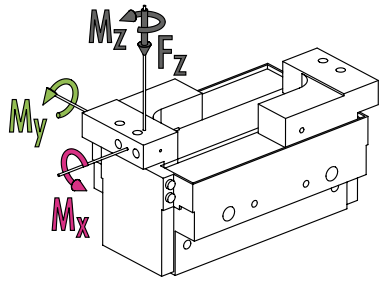

M_x max. 14 Nm
M_y max. 27 Nm
M_z max. 22 Nm
F_z max. 600 N

ⓘ The indicated moments and forces are static values, apply per base jaw and may occur simultaneously. M_y may arise in addition to the moment generated by the gripping force itself. If the max. permitted finger weight is exceeded, it is impreative to throttle the air supply so that the jaw movement occurs without any hitting or bouncing. Service life may be reduced.

Technical data

Description		RH 9010
ID		0360141
Stroke per jaw	[mm]	40
Closing- / opening force	[N]	150/150
Integrated monitoring		0
Weight	[kg]	0.89
Recommended workpiece weight	[kg]	0.75
Fluid consumption per double stroke	[cm³]	8
min. / max. operating pressure	[bar]	2/7
Nominal operating pressure	[bar]	6
Closing- / opening time	[s]	0.5/0.5
max. permitted finger length	[mm]	100
max. permitted weight per finger	[kg]	0.15
IP class		30
min. / max. ambient temperature	[°C]	5/60
Repeat accuracy	[mm]	0.02

Main view

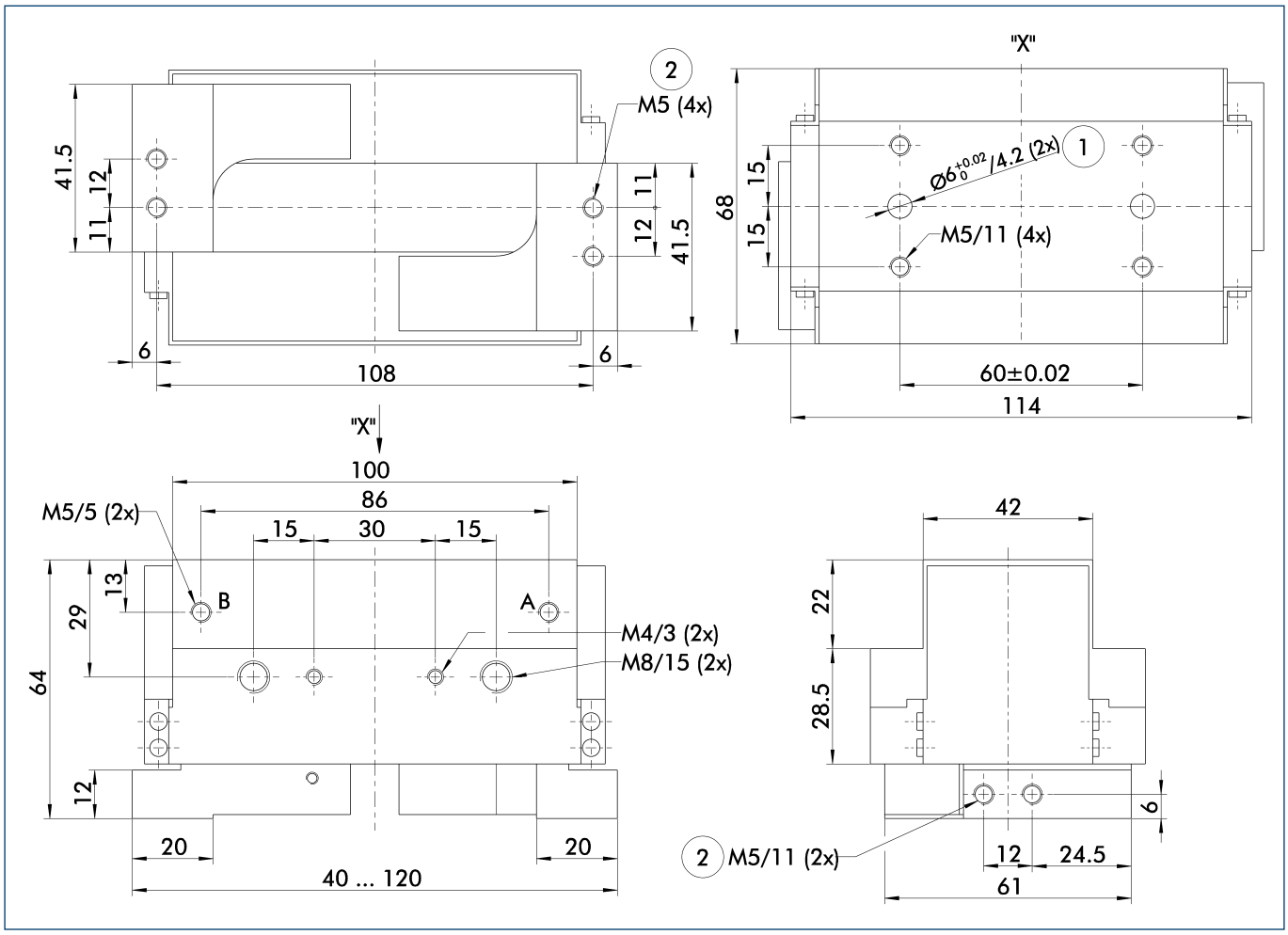

The drawing shows the gripper in the basic version with closed jaws, without dimensional consideration of the options described below.

ⓘ The SDV-P pressure maintenance valve can be used as a gripping force maintenance device (see catalog section on "Accessories").

A, a Main / direct connection, gripper opening

B, b Main / direct connection, gripper closing

(1) Gripper connection

(2) Finger connection

Mounting kit for proximity switch

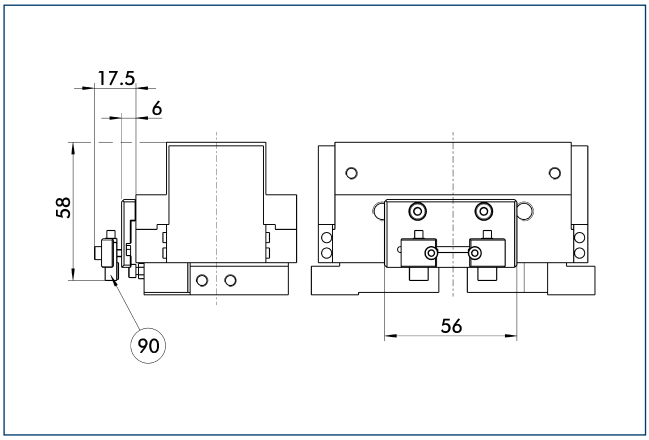

(90) IN ... sensor

Limit position monitor can be mounted with mounting kit.

Description	ID	
Mounting kit for proximity switch		
AS-RH 9010	0360207	

ⓘ This mounting kit needs to be ordered optionally as an accessory.

Inductive proximity switches

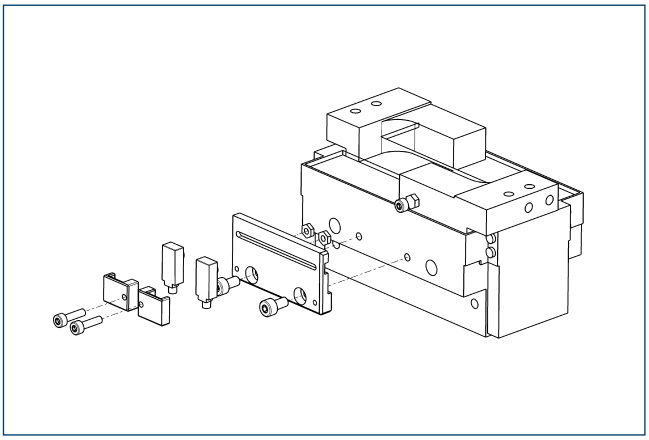

Limit position monitor can be mounted with mounting kit.

Description	ID	Often combined
Inductive proximity switches		
IN 8-S-M12	0301581	
IN 8-S-M8	0301481	●
INK 8-S	9700052	
Cable extensions		
KV BG12-SG12 3P-0030-PNP	0301999	
KV BG12-SG12 3P-0060-PNP	0301998	
KV BW08-SG08 3P-0030-PNP	0301495	
KV BW08-SG08 3P-0100-PNP	0301496	
KV BW08-SG08 3P-0200-PNP	0301497	●
KV BW12-SG12 3P-0030-PNP	0301595	
KV BW12-SG12 3P-0100-PNP	0301596	
KV BW12-SG12 3P-0200-PNP	0301597	
Clip for plug / socket		
CLI-M12	0301464	
CLI-M8	0301463	
Connection cables		
KA BG08-L 3P-0300-PNP	0301622	●
KA BG08-L 3P-0500-PNP	0301623	
KA BG12-L 3P-0500-PNP	30016369	
KA BW08-L 3P-0300-PNP	0301594	
KA BW08-L 3P-0500-PNP	0301502	
KA BW12-L 3P-0300-PNP	0301503	
KA BW12-L 3P-0500-PNP	0301507	
Sensor distributor		
V2-M8	0301775	●
V2-M12	0301776	●
V4-M12	0301747	
V4-M8	0301746	
V8-M12	0301752	
V8-M8	0301751	

ⓘ Two sensors (closer/S) are required for each unit, plus extension cables as an option. Please note the minimum permitted bending radii for the sensor cables, which are generally 35 mm.

RH 918

SCHUNK Grippers pneumatic | 2-Finger Parallel Grippers | Small Components Gripper

Finger load

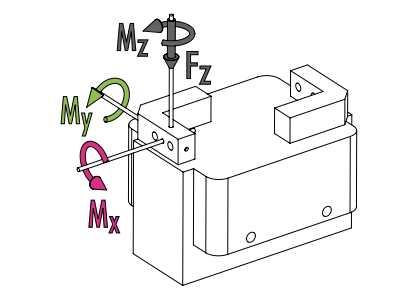

M_x max. 7 Nm
M_z max. 7 Nm
M_y max. 12 Nm
F_z max. 1150 N

ⓘ The indicated moments and forces are static values, apply per base jaw and may occur simultaneously. M_y may arise in addition to the moment generated by the gripping force itself. If the max. permitted finger weight is exceeded, it is impreative to throttle the air supply so that the jaw movement occurs without any hitting or bouncing. Service life may be reduced.

Technical data

Description		RH 918
ID		0360140
Stroke per jaw	[mm]	30
Closing- / opening force	[N]	100/100
Integrated monitoring		0
Weight	[kg]	0.48
Recommended workpiece weight	[kg]	0.5
Fluid consumption per double stroke	[cm³]	16
min. / max. operating pressure	[bar]	2/7
Nominal operating pressure	[bar]	6
Closing- / opening time	[s]	0.4/0.4
max. permitted finger length	[mm]	65
max. permitted weight per finger	[kg]	0.12
IP class		30
min. / max. ambient temperature	[°C]	5/60
Repeat accuracy	[mm]	0.02

Main view

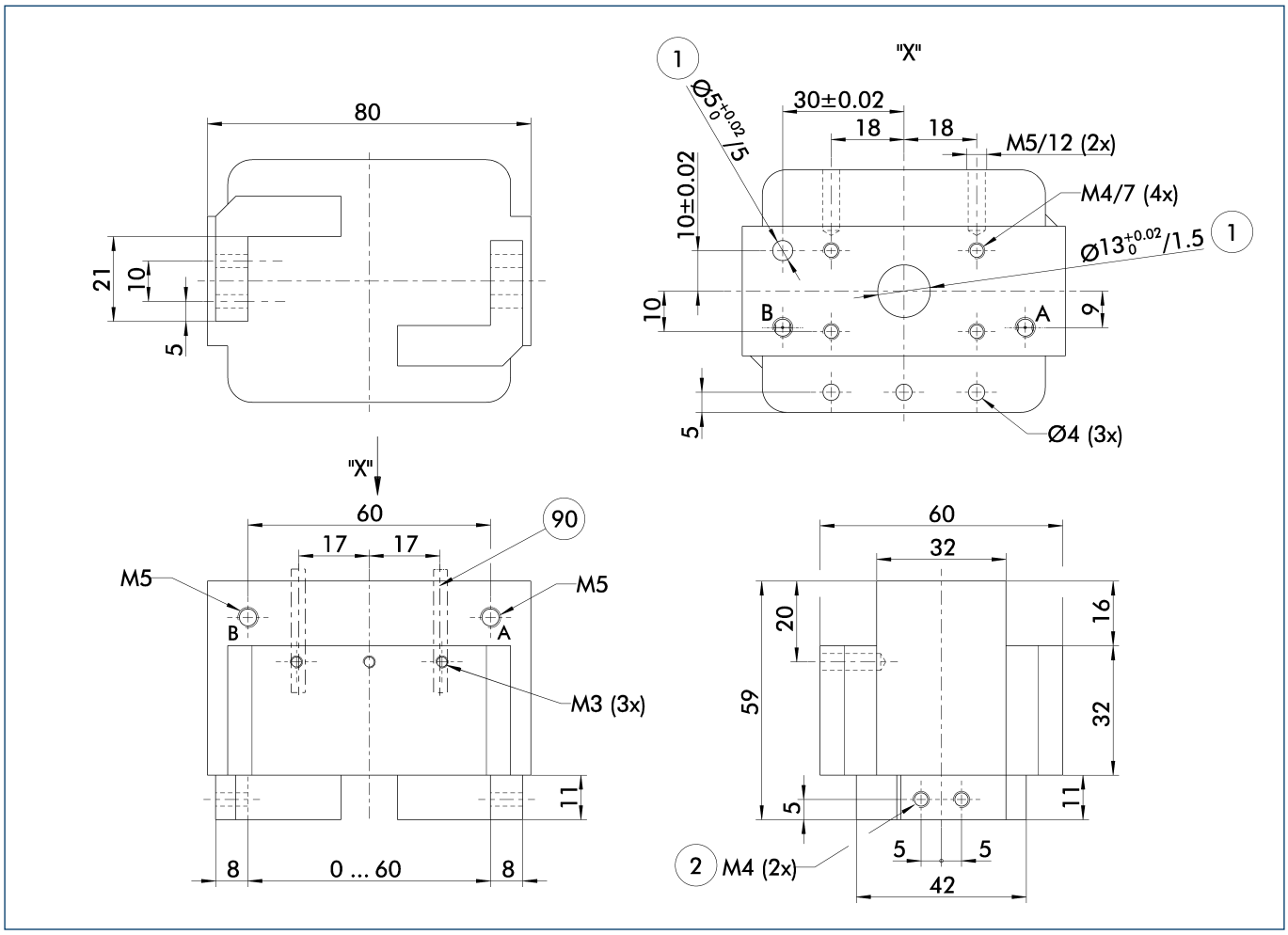

The drawing shows the gripper in the basic version with closed jaws, without dimensional consideration of the options described below.

ⓘ The SDV-P pressure maintenance valve can be used as a gripping force maintenance device (see catalog section on "Accessories").

A, a Main / direct connection, gripper opening

B, b Main / direct connection, gripper closing

(1) Gripper connection
(2) Finger connection
(90) IN ... sensor

Inductive proximity switches

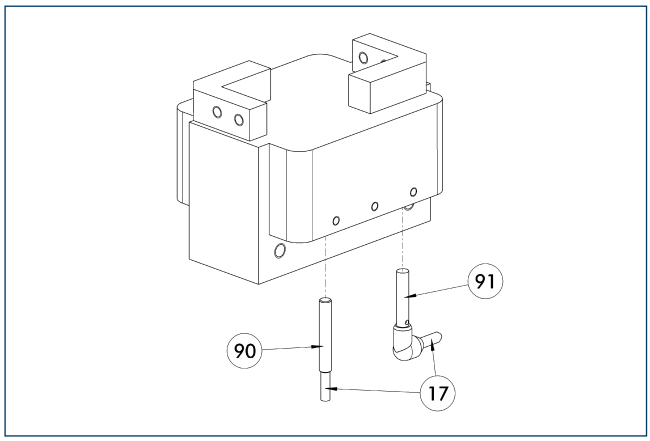

(17) Cable outlet
(91) IN ...-SA sensor
(90) IN ... sensor

Directly mounted limit position monitor.

Description	ID	Often combined
Inductive proximity switches		
IN 40-S-M12	0301574	
IN 40-S-M8	0301474	●
INK 40-S	0301555	
Inductive proximity switches with lateral outlet		
IN 40-S-M12-SA	0301577	
IN 40-S-M8-SA	0301473	●
INK 40-S-SA	0301565	
Cable extensions		
KV BG12-SG12 3P-0030-PNP	0301999	
KV BG12-SG12 3P-0060-PNP	0301998	
KV BW08-SG08 3P-0030-PNP	0301495	
KV BW08-SG08 3P-0100-PNP	0301496	
KV BW08-SG08 3P-0200-PNP	0301497	●
KV BW12-SG12 3P-0030-PNP	0301595	
KV BW12-SG12 3P-0100-PNP	0301596	
KV BW12-SG12 3P-0200-PNP	0301597	
Clip for plug / socket		
CLI-M12	0301464	
CLI-M8	0301463	
Connection cables		
KA BG08-L 3P-0300-PNP	0301622	●
KA BG08-L 3P-0500-PNP	0301623	
KA BG12-L 3P-0500-PNP	30016369	
KA BW08-L 3P-0300-PNP	0301594	
KA BW08-L 3P-0500-PNP	0301502	
KA BW12-L 3P-0300-PNP	0301503	
KA BW12-L 3P-0500-PNP	0301507	
Sensor distributor		
V2-M8	0301775	●
V2-M12	0301776	●
V4-M12	0301747	
V4-M8	0301746	

ⓘ Two sensors (closer/S) are required for each unit, plus extension cables as an option. Please note the minimum permitted bending radii for the sensor cables, which are generally 35 mm.

Mounting kit for FPS

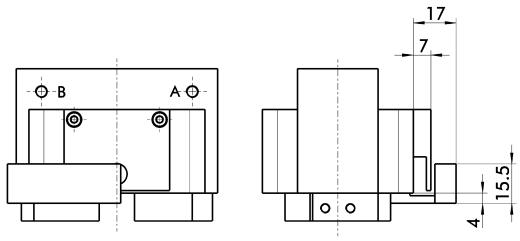

The following FPS position sensor can differentiate between five programmable areas and/or switching points for the stroke of a gripper, and can be used in combination with a PC as a measuring system.

Description	ID	
Mounting kit for FPS		
AS-FPS-RH 918	0301718	

ⓘ This mounting kit needs to be ordered optionally as an accessory.

Flexible position sensor

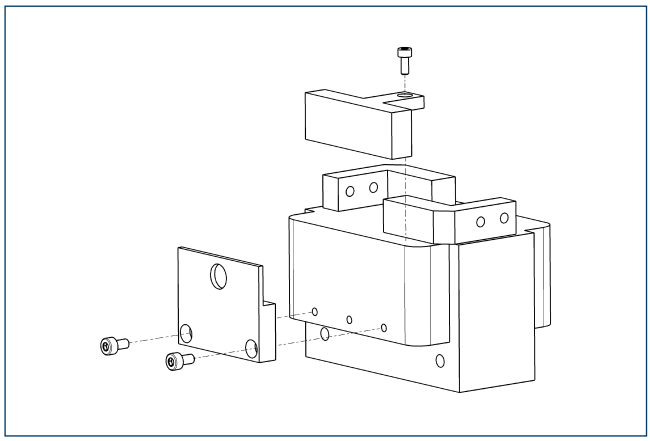

Flexible position monitoring of up to five positions.

Description	ID	Often combined
Mounting kit for FPS		
AS-FPS-RH 918	0301718	
Electronic processor		
FPS-F5 T	0301807	
FPS-F5	0301805	●
Sensor		
FPS-S 13	0301705	

ⓘ When using a FPS system, a FPS sensor (FPS-S) and a control unit (FPS-F5 / F5 T) are required for each gripper as well as a mounting kit (AS), if listed. Cable extensions (KV) are available as options in the "Accessories" catalog section.

RH 806

SCHUNK Grippers pneumatic | 2-Finger Parallel Grippers | Small Components Gripper

Sensor switching characteristics

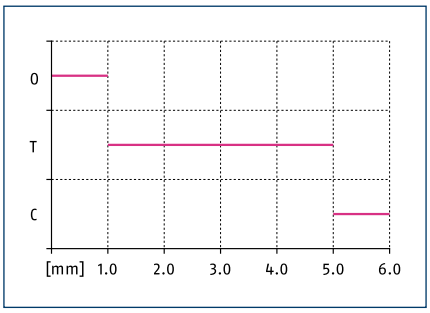

Grippers with an integrated photo sensor indicate two of three positions. (0 = open, T = gripped, C = closed)

Finger load

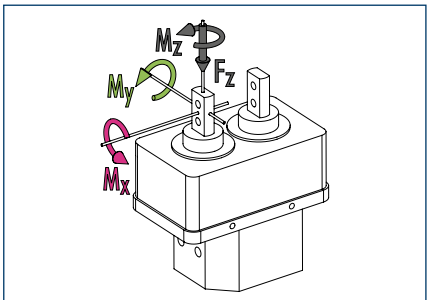

M_x max. 4 Nm
M_y max. 6 Nm
M_z max. 9 Nm
F_z max. 1500 N

ⓘ The indicated moments and forces are static values, apply per base jaw and may occur simultaneously. M_y may arise in addition to the moment generated by the gripping force itself. If the max. permitted finger weight is exceeded, it is impreative to throttle the air supply so that the jaw movement occurs without any hitting or bouncing. Service life may be reduced.

Technical data

Description		RH 806 KP	RH 806 KP PX 0T5	RH 806 KP PX 0C5	RH 806 KP PX TC5
ID		0360178	0360179	0360180	0360181
Stroke per jaw	[mm]	6	6	6	6
Closing- / opening force	[N]	65/65	65/65	65/65	65/65
Integrated monitoring		0	1	1	1
Weight	[kg]	0.36	0.36	0.36	0.36
Recommended workpiece weight	[kg]	0.325	0.325	0.325	0.325
Fluid consumption per double stroke	[cm³]	10	10	10	10
min. / max. operating pressure	[bar]	2/7	2/7	2/7	2/7
Nominal operating pressure	[bar]	6	6	6	6
Closing- / opening time	[s]	0.13/0.1	0.13/0.1	0.13/0.1	0.13/0.1
max. permitted finger length	[mm]	50	50	50	50
max. permitted weight per finger	[kg]	0.07	0.07	0.07	0.07
IP class		30	30	30	30
min. / max. ambient temperature	[°C]	5/60	5/60	5/60	5/60
Repeat accuracy	[mm]	0.02	0.02	0.02	0.02

Main view

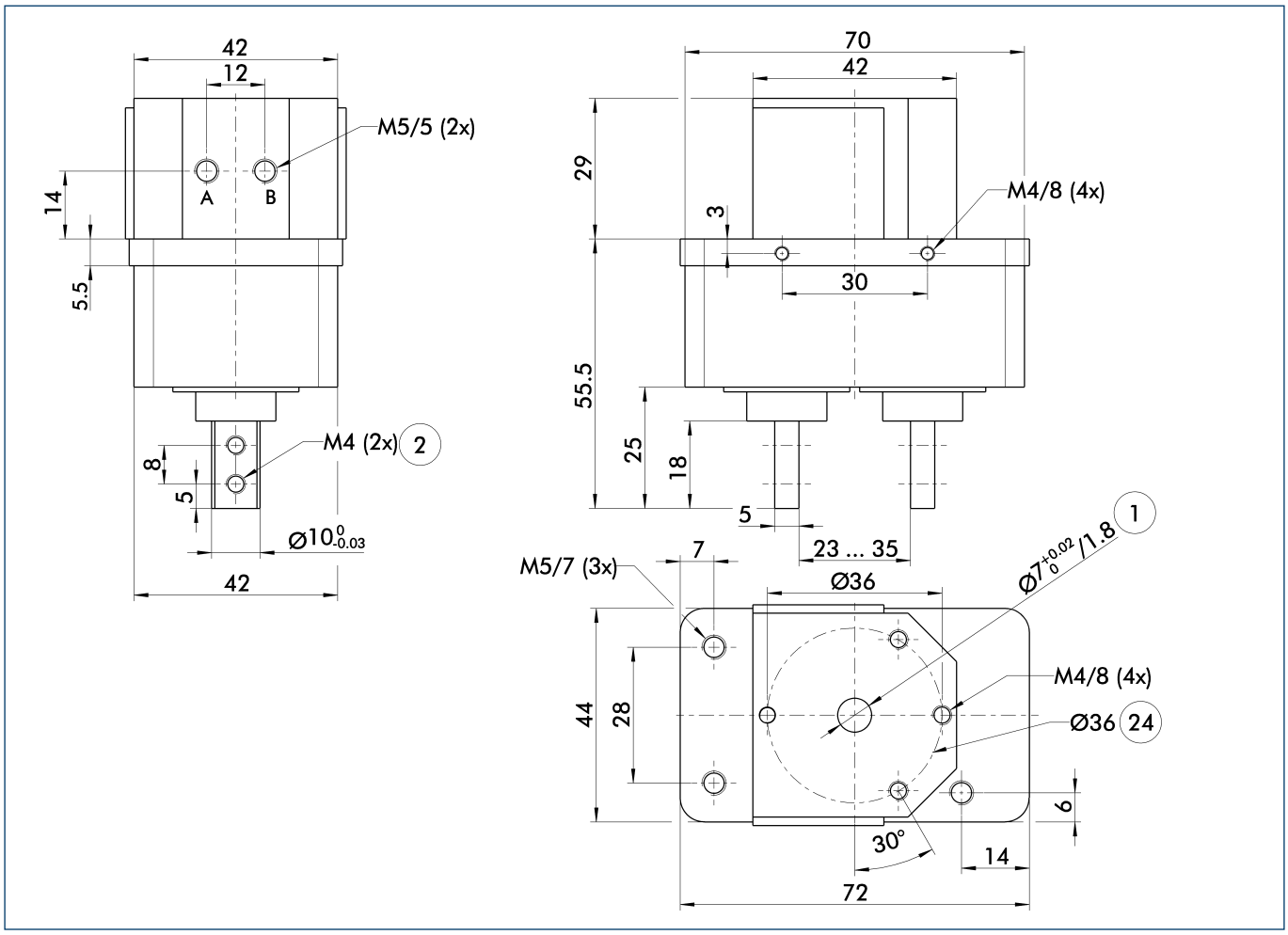

The drawing shows the gripper in the basic version with closed jaws, without dimensional consideration of the options described below.

ⓘ The SDV-P pressure maintenance valve can be used as a gripping force maintenance device (see catalog section on "Accessories").

A, a Main / direct connection, gripper opening

B, b Main / direct connection, gripper closing

(1) Gripper connection
(2) Finger connection
(24) Bolt circle

Attachment to the proximity switch

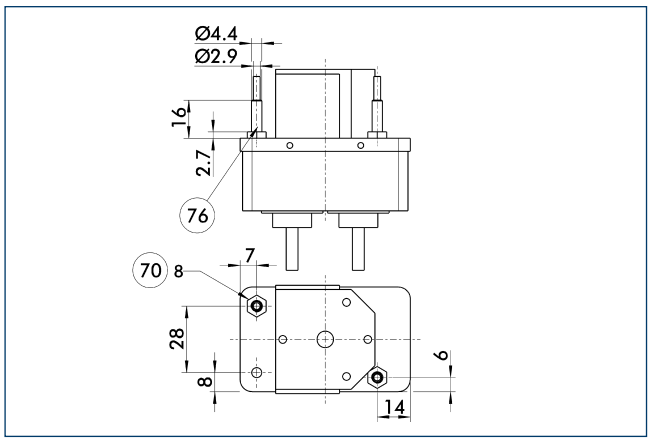

(70) Wrench size (76) LED

For PX versions, the scope of delivery comprises the sensor and installation material.

RH 801

SCHUNK Grippers pneumatic | 2-Finger Parallel Grippers | Small Components Gripper

Sensor switching characteristics

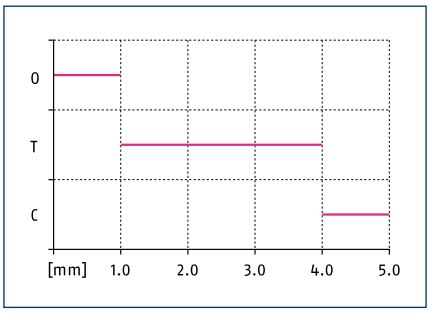

Grippers with an integrated photo sensor indicate two of three positions. (0 = open, T = gripped, C = closed)

Finger load

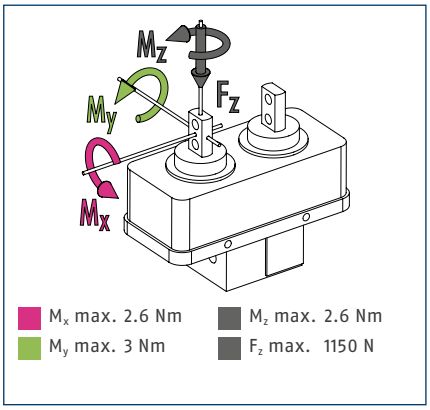

ⓘ The indicated moments and forces are static values, apply per base jaw and may occur simultaneously. M_y may arise in addition to the moment generated by the gripping force itself. If the max. permitted finger weight is exceeded, it is impreative to throttle the air supply so that the jaw movement occurs without any hitting or bouncing. Service life may be reduced.

Technical data

Description		RH 801 KP	RH 801 KP PX C5	RH 801 KP PX 05	RH 801 KP PX T5
ID		0360174	0360177	0360175	0360176
Stroke per jaw	[mm]	5	5	5	5
Closing- / opening force	[N]	23/23	23/23	23/23	23/23
Integrated monitoring		0	1	1	1
Weight	[kg]	0.15	0.15	0.15	0.15
Recommended workpiece weight	[kg]	0.115	0.115	0.115	0.115
Fluid consumption per double stroke	[cm³]	2	2	2	2
min. / max. operating pressure	[bar]	2/7	2/7	2/7	2/7
Nominal operating pressure	[bar]	6	6	6	6
Closing- / opening time	[s]	0.13/0.1	0.13/0.1	0.13/0.1	0.13/0.1
max. permitted finger length	[mm]	25	25	25	25
max. permitted weight per finger	[kg]	0.05	0.05	0.05	0.05
IP class		30	30	30	30
min. / max. ambient temperature	[°C]	5/60	5/60	5/60	5/60
Repeat accuracy	[mm]	0.02	0.02	0.02	0.02

Main view

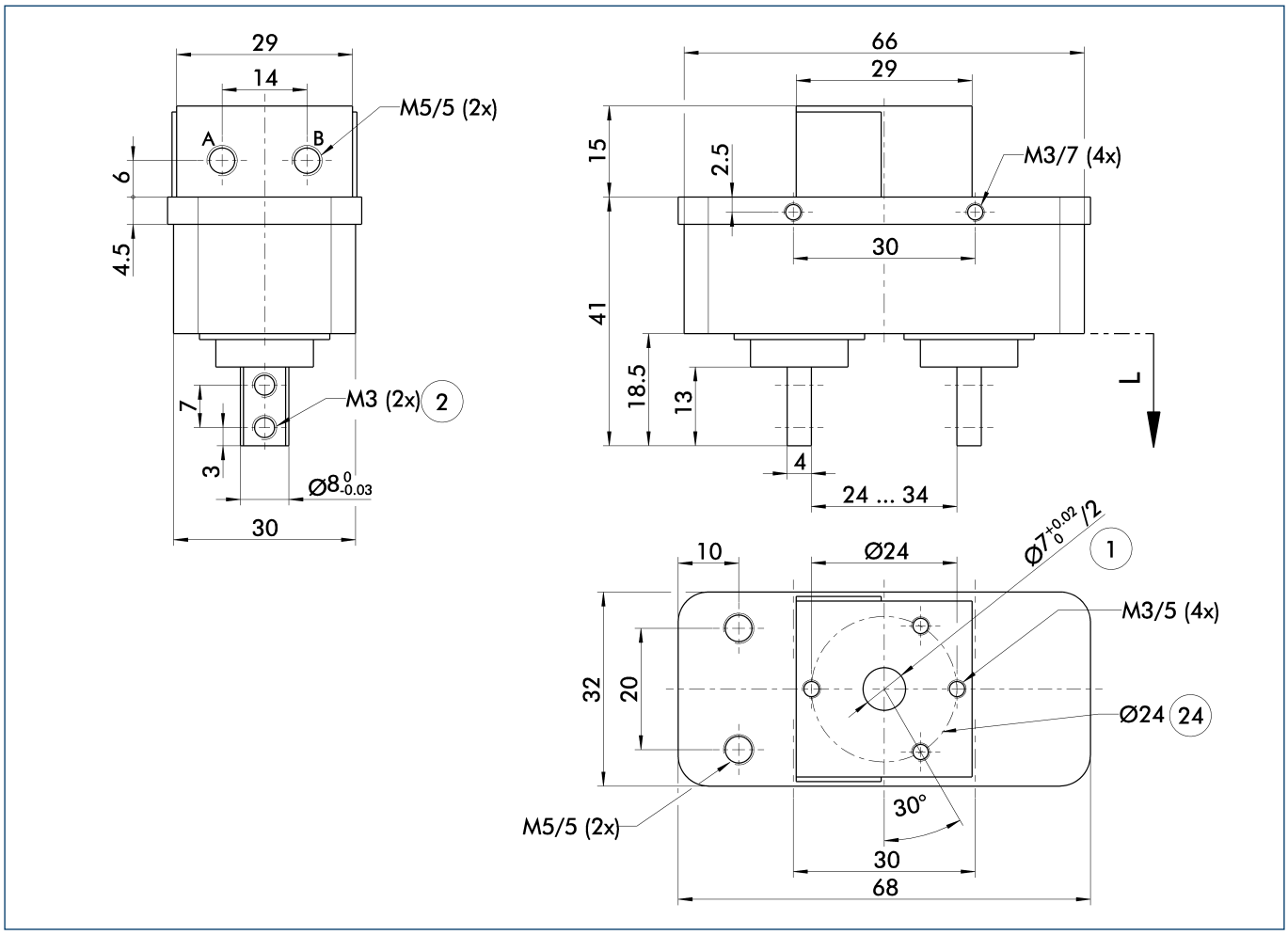

The drawing shows the gripper in the basic version with closed jaws, without dimensional consideration of the options described below.

ⓘ The SDV-P pressure maintenance valve can be used as a gripping force maintenance device (see catalog section on "Accessories").

A, a Main / direct connection, gripper opening

B, b Main / direct connection, gripper closing

(1) Gripper connection
(2) Finger connection
(24) Bolt circle

Attachment to the proximity switch

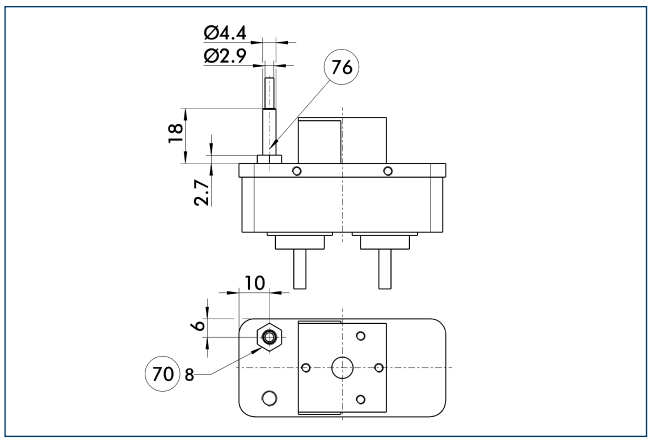

(70) Wrench size (76) LED

For PX versions, the scope of delivery comprises the sensor and installation material.

Reliable. Robust. Flexible.
PGN-plus Universal Gripper

Universal 2-finger parallel gripper with large gripping force and high maximum moments thanks to multi-tooth guidance

Field of Application

Optimal standard solution for numerous fields of application. For universal use in clean to slightly dirty environments. Special versions available for dirty environments.

Advantages – Your benefit

Robust multi-tooth guidance for precise handling

High maximum moments possible suitable for using long gripper fingers

Drive concept oval piston for maximum gripping forces

Mounting from two sides in three screw directions for universal and flexible gripper assembly

Air supply via hose-free direct connection or screw connections for universal and flexible gripper assembly

Comprehensive sensor accessory program for versatile interrogation possibilities and control of stroke position

Compact dimensions for minimal interfering contours in handling

Manifold options for special optimisation to your specific application (dust-tight, high-temperature, corrosion-protected, etc.)

Sizes	Weight	Gripping force	Stroke per jaw	Workpiece weight
Quantity: 11	0.08 .. 39.5 kg	123 .. 21150 N	2 .. 45 mm	0.62 .. 80.5 kg

Functional Description

The oval piston is moved up or down by compressed air.
The angled active surfaces of the wedge-hook produce a synchronized, parallel jaw motion.

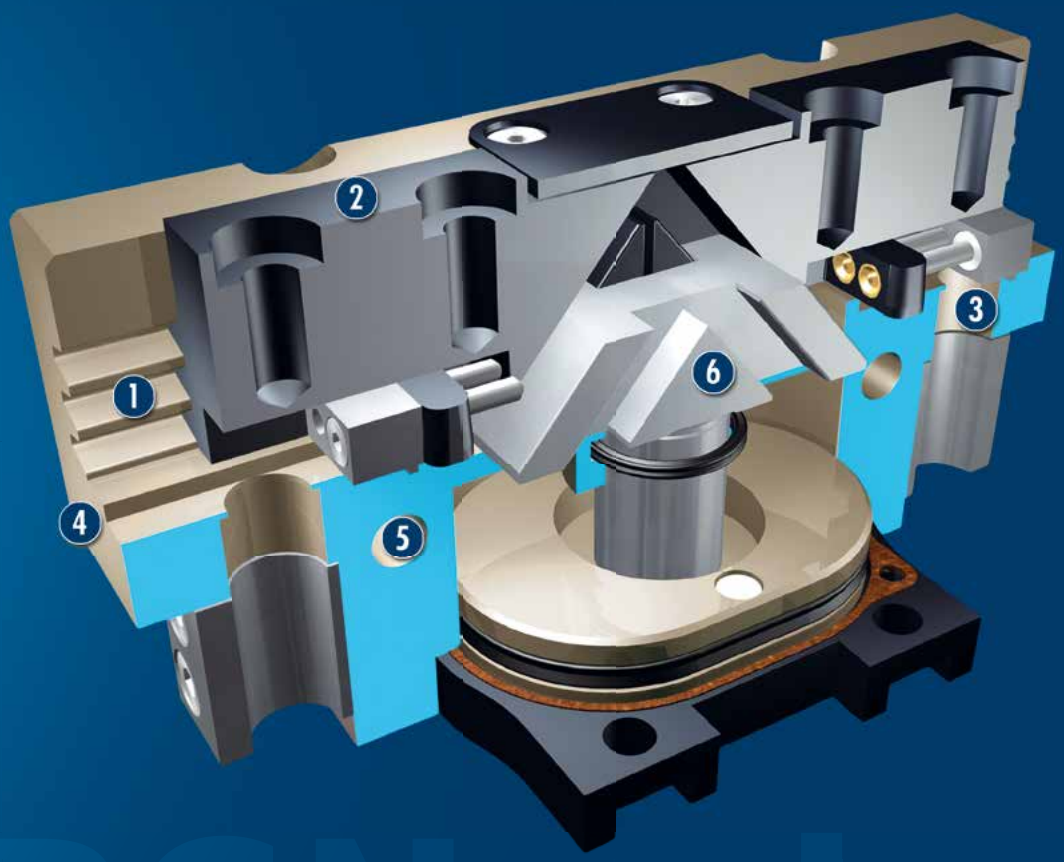

① **Multiple-tooth guidance**
High-loadable base jaw guidance with minimum play for long fingers

② **Base jaw**
for the connection of workpiece-specific gripper fingers

③ **Sensor system**
Brackets for proximity switches and adjustable control cams in the housing

④ **Housing**
Weight-optimized through application of high-strength aluminum alloy

⑤ **Centering and mounting possibilities**
for universal assembly of the gripper

⑥ **Wedge-hook design**
for high power transmission and centric gripping

CAD data, operating manuals and other current product documents are available at **www.schunk.com**

General Notes about the Series

Operating principle: Wedge-hook kinematics

Housing material: Aluminum

Base jaw material: Steel

Actuation: pneumatic, with filtered compressed air as per DIN ISO 8573-1: 7 4 4

Warranty: 36 months (for details, GTCs, and operating manuals, visit www.schunk.com)

Scope of delivery: Mount for proximity switch, centering sleeves, O-rings for direct connection, assembly and operating manual with declaration of incorporation.

Gripping force maintenance device: possible with variants with mechanical maintenance of gripping force or SDV-P pressure maintenance valve

Gripping force: is the arithmetic total of the gripping force applied to each gripper jaw at distance P (see illustration).

Finger length: is measured from the upper edge of the gripper housing in the direction of the main axis. The breach of the max. permitted finger length can bring higher abrasion. The maximum permissible finger length applies up to the nominal operating pressure. With higher pressures, the finger length must be reduced proportionally to the nominal operating pressure.

Repeat accuracy: is defined as the spread of the limit position after 100 consecutive strokes.

Workpiece weight: is calculated for a force-fit connection with a coefficient of friction of 0.1 and a safety factor of 2 against slippage of the workpiece on acceleration due to gravity g. Considerably heavier workpiece weights are permitted with form-fit gripping.

Closing and opening times: are purely the times that the base jaws or fingers are in motion. Valve switching times, hose filling times or PLC reaction times are not included in the above times and must be taken into consideration when determining cycle times.

Application example

Pick & place unit for light to medium-weight components

1. PGN-plus 2-Finger Parallel Gripper
2. LM Linear Module
3. LM Linear Module

SCHUNK offers more ...

The following components make the product PGN-plus even more productive – the suitable addition for the highest functionality, flexibility, reliability, and controlled production.

SRU-plus Rotary Actuator

SWS Quick-change System

AGE-F Compensation Unit

ELB Linear Module

SDV-P Pressure Maintenance Valve

Fittings

Jaw Quick-change System

Flexible Position Sensor

Finger Blanks with Jaw Quick-change System

Force Measuring Jaws

Sensor System

Analog Position Sensor

ⓘ Further information regarding the products can be found on the following product pages or at www.schunk.com. Please contact us for further information: SCHUNK technical hotline +49-7133-103-2696

Options and special Information

Gripping force maintenance version AS / IS: The mechanical gripping force maintenance version ensures a minimum gripping force also in the case of a drop in pressure. In the AS / S version this has the effect of a closing force, in the IS version of an opening force.
Anti-corrosion version K: for use in corrosion-inducing atmospheres
High-temperature version V/HT: for use in hot environments
Force intensified version KVZ: if higher gripping forces are required
Precision version P: for the highest accuracy
ATEX version EX: for explosive environments
Dust-tight version SD: absolutely sealed, increased degree of protection against the ingress of materials.
Additional versions: Various options can be combined.

SCHUNK PGN-plus grippers

Accessories at a glance

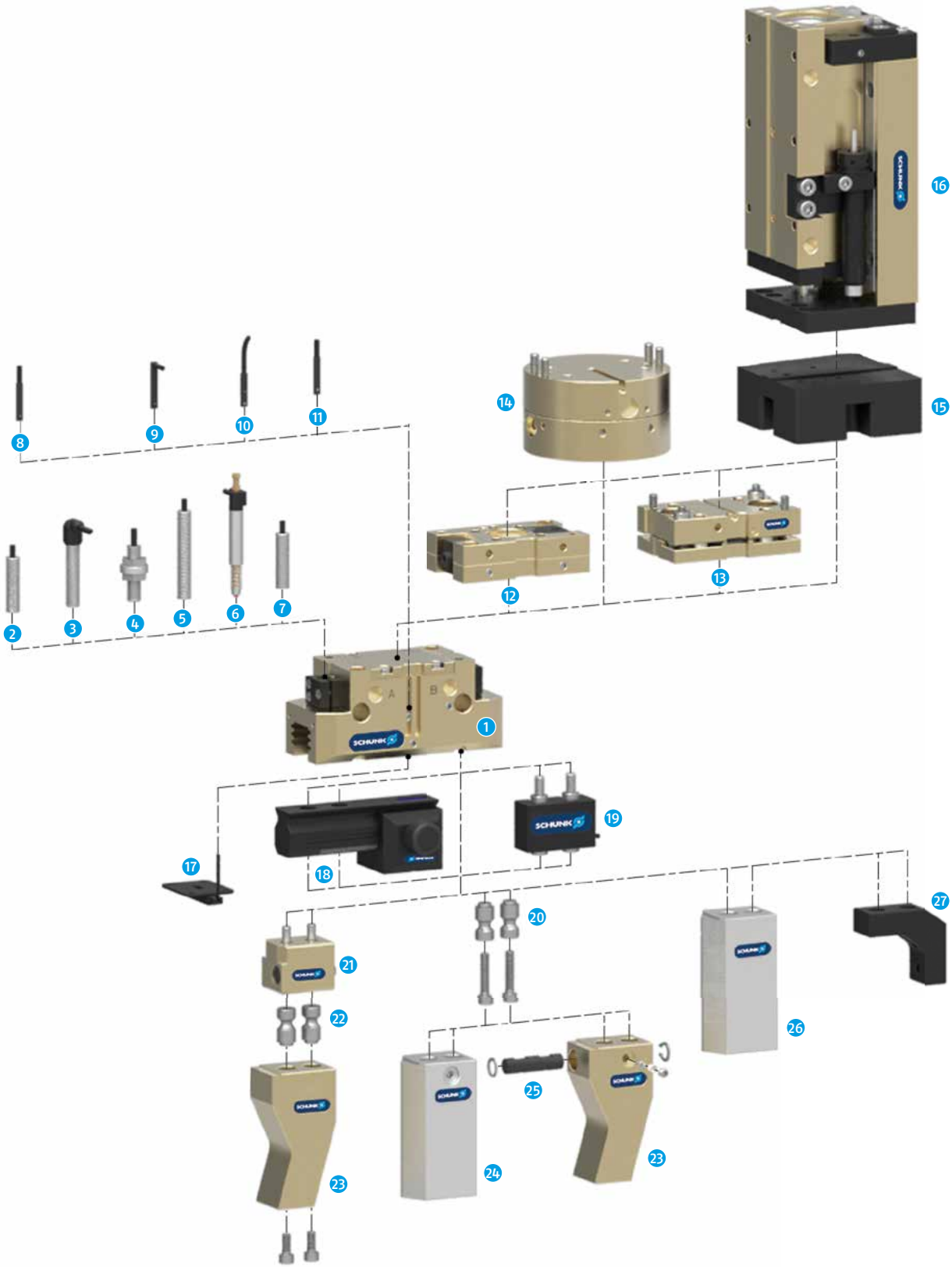

1. **PGN-plus**
   Universal servo-electric 2-finger parallel gripper with high gripping force and high maximum moment due to multi-tooth guidance
2. **IN ...**
   Inductive proximity switch with integrated cable and axial cable outlet
3. **IN ...-SA**
   Inductive proximity switch with integrated cable and side cable outlet
4. **FPS**
   Digital measuring system for monitoring up to five different freely selectable positions
5. **APS-Z80**
   Inductive measuring system for precise monitoring of the gripper jaw position with analog output
6. **APS-M1S**
   Mechanical measuring system for precise monitoring of the gripper jaw position with analog output
7. **RMS**
   Reed switch, in round version
8. **MMS 22**
   Magnetic switch with axial cable outlet for monitoring one position
8. **MMS 22-PI1**
   Magnetic switch with axial cable outlet for monitoring one freely programmable position
8. **MMS 22-PI2**
   Magnetic switch with axial cable outlet for monitoring two freely programmable positions
9. **MMS 22-SA**
   Magnetic switch with side cable outlet for monitoring one position
9. **MMS 22-PI1-SA**
   Magnetic switch with side cable outlet for monitoring one freely programmable position
10. **MMS-P**
    Magnetic switch with axial cable outlet for monitoring two freely programmable positions, with integrated teach function
11. **RMS 22**
    Reed switch for direct mounting in the C slot
12. **CWS**
    Manual changing system with integrated air feed-through for easy changing of the handling components
13. **TCU**
    Tolerance compensation unit for compensating smaller tolerances in the plane
14. **AGE**
    Compensation unit for compensating larger tolerances in the X and Y axis
15. **ASG**
    Adapter plate for combining many different automation components in a modular system
16. **CLM**
    Linear module with pneumatic drive and pre-loaded junction rollers with zero play
17. **OAS**
    Optical clearance and presence sensor for detecting the presence of a workpiece and its clearance
18. **UZB**
    The universal intermediate jaw allow fast and safe adjustment of top jaws on the gripper, without the use of tools
19. **FMS**
    Power measurement jaws for measuring gripping forces, workpiece weights or dimensional deviations
20. **BSWS-AR**
    Adapter coupling of the jaw quick-change system for fast, manual changing of top jaws
21. **BSWS-B**
    Locking mechanism of the jaw quick-change system for fast, manual changing of top jaws
22. **BSWS-A**
    Adapter coupling of the jaw quick-change system for adaptation to the customized finger
23. **Customized finger**
24. **BSWS-ABR**
    Aluminum finger blank with interface of the jaw quick-change system
24. **BSWS-SBR**
    Steel finger blank with interface of the quick-change jaw system
25. **BSWS-UR**
    Locking mechanism for integration of the jaw quick-change system in customized fingers
26. **ABR / SBR**
    Steel or aluminum finger blanks with standardized screw connection pattern
27. **ZBA**
    Intermediate jaws for reorientation of the bolt-on surface

PGN-plus 40

SCHUNK Grippers pneumatic | 2-Finger Parallel Grippers | Universal Gripper

Gripping force, O.D. gripping

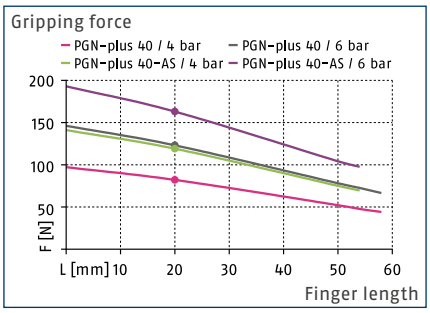

Gripping force, I.D. gripping

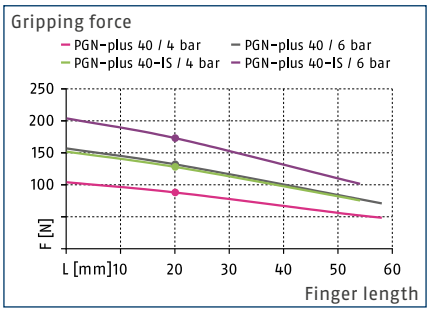

Finger load

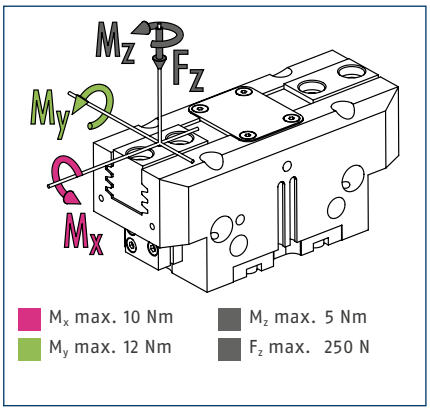

ⓘ The indicated moments and forces are static values, apply per base jaw and may occur simultaneously. M_y may arise in addition to the moment generated by the gripping force itself. If the max. permitted finger weight is exceeded, it is impreative to throttle the air supply so that the jaw movement occurs without any hitting or bouncing. Service life may be reduced.

Technical data

Description		PGN-plus 40	PGN-plus 40-AS	PGN-plus 40-IS
ID		0371080	0371082	0371084
Stroke per jaw	[mm]	2.5	2.5	2.5
Closing- / opening force	[N]	123/132	163/-	-/182
min. spring force	[N]		40	50
Weight	[kg]	0.08	0.1	0.1
Recommended workpiece weight	[kg]	0.62	0.62	0.62
Fluid consumption per double stroke	[cm³]	2.5	4.5	5.5
min. / max. operating pressure	[bar]	2.5/8	4/6.5	4/6.5
Nominal operating pressure	[bar]	6	6	6
Closing- / opening time	[s]	0.02/0.02	0.02/0.03	0.03/0.02
Closing- / opening time only with spring	[s]		0.05	0.05
max. permitted finger length	[mm]	58	54	54
max. permitted weight per finger	[kg]	0.1	0.1	0.1
IP class		40	40	40
min. / max. ambient temperature	[°C]	5/90	5/90	5/90
Repeat accuracy	[mm]	0.01	0.01	0.01
Cleanroom class ISO 14644-1		5	5	5
Options and their characteristics				
Dust-tight version		37371080	37371082	37371084
IP class		64	64	64
Weight	[kg]	0.1	0.12	0.12
Anti-corrosion version		38371080	38371082	38371084
High-temperature version		39371080	39371082	39371084
min. / max. ambient temperature	[°C]	5/130	5/130	5/130
Force intensified version		0372098	0372398	0372458
Closing- / opening force	[N]	225/235	265/-	-/285
Weight	[kg]	0.11	0.13	0.13
Maximum pressure	[bar]	6	6	6
max. permitted finger length	[mm]	50	50	50
Precision version		0371120	0371420	

ⓘ The full gripping force according to the data table is only realised after around 100 gripping cycles.

Main view

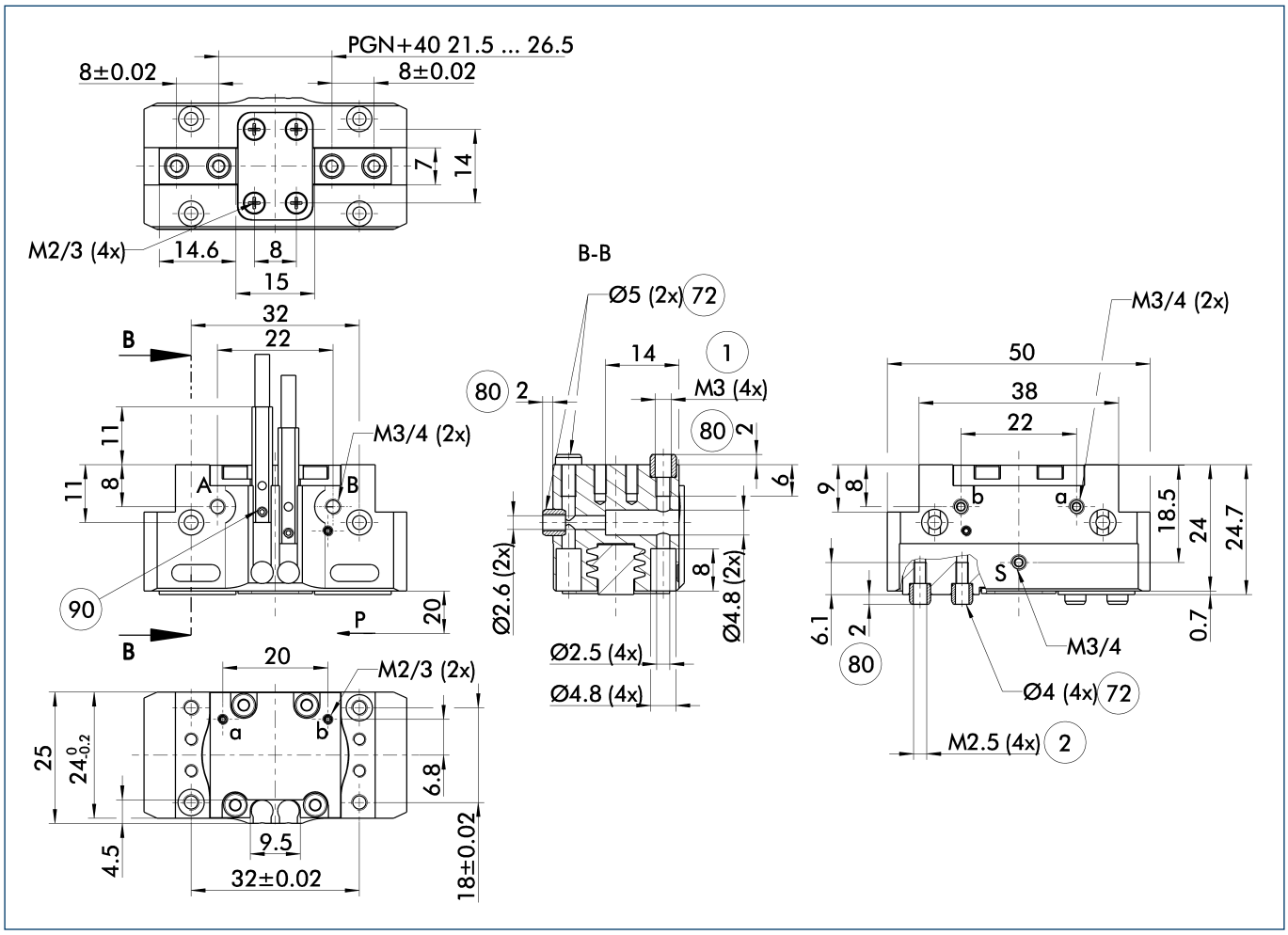

The drawing shows the gripper in the basic version with closed jaws, without dimensional consideration of the options described below.

ⓘ The SDV-P pressure maintenance valve can also be used for I.D. or O.D. gripping alternatively or in addition to the spring-loaded, mechanical gripping force maintenance device (see catalog section on "Accessories").

A, a Main / direct connection, gripper opening

B, b Main / direct connection, gripper closing

S Air purge connection (0.5 ... 1 bar)

(1) Gripper connection

(2) Finger connection

(72) Fit for centering sleeves

(80) Depth of the centering sleeve hole in the mating part

(90) MMS 22... sensor

Maximum permitted finger projection

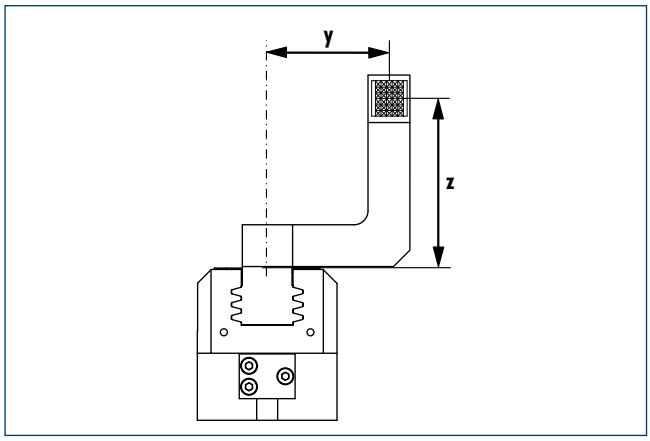

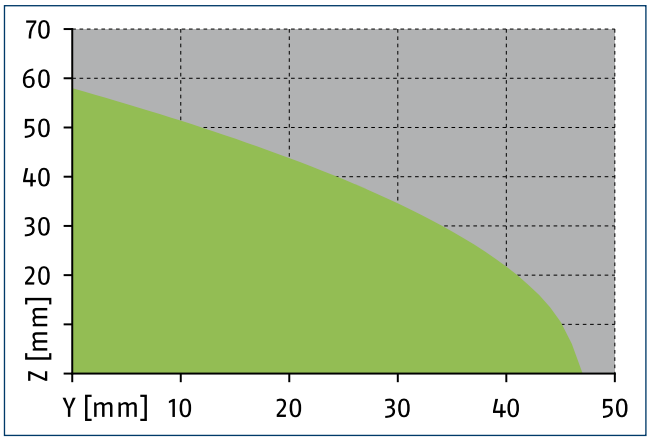

Permitted range

Inadmissible range

The curve applies for the base version (Stroke -1). For other versions, the curve must be offset in parallel corresponding to the max. permissible finger length.

Hose-free direct connection M2

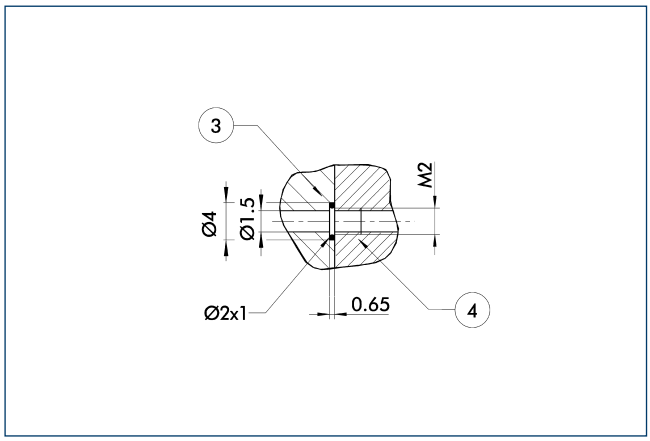

3 Adapter

4 Gripper

The direct connection is used for supplying compressed air without hoses. Instead, the pressure medium is fed through bore-holes in the mounting plate.

Gripping force maintenance device AS / IS

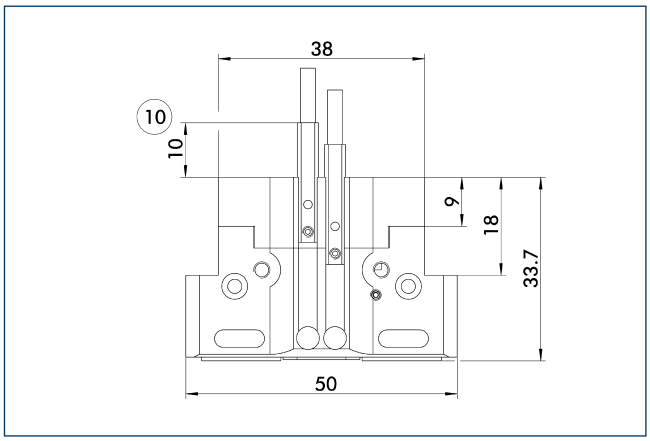

10 Projection applies only for AS version

The mechanical maintenance of gripping force also assures a minimum gripping force in the case of a loss of pressure. With the AS / S variant, this acts as a closing force, and as an opening force for the IS variant. The maintenance of gripping force element can also be used as a means for increasing gripping force or for single actuated gripping.

Dust-tight version

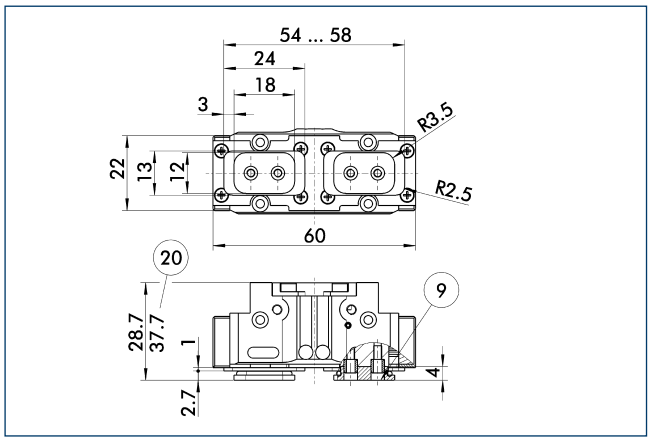

(9) For mounting screw connection diagram, see basic version
(20) For AS / IS version

The "dust-protection" option increases the degree of protection against penetrating substances. The screw connection diagram shifts by the height of the intermediate jaw. The finger length is still measured from the upper edge of the gripper housing.

Force intensified version

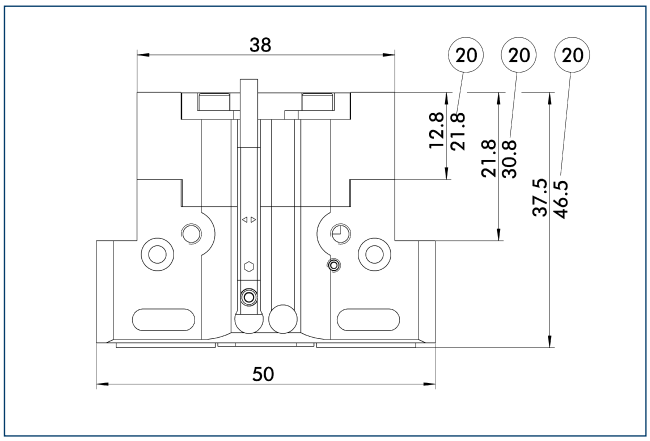

(20) For AS / IS version

The KVZ power booster cylinder increases gripping forces for opening and closing. A second piston connected in a series increases the force on the diagonal pull for this purpose. If applicable, observe the additional installation height for combination with an element for maintenance of gripping force.

Precision version

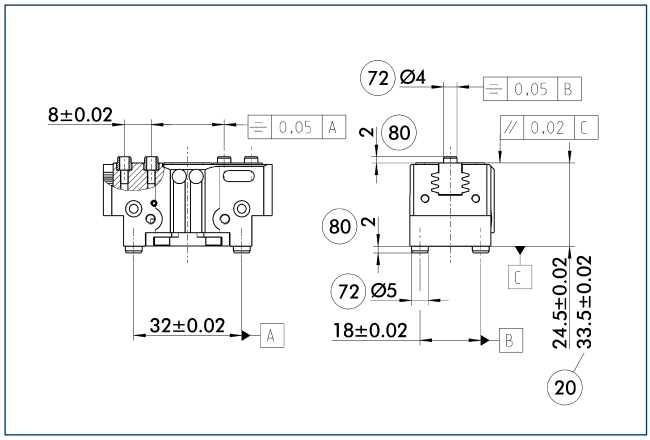

(20) For AS / IS version
(72) Fit for centering sleeves
(80) Depth of the centering sleeve hole in the mating part

The indicated tolerances just refer to the types of precision versions shown in the chart of technical specifications. All other types of precision versions are available on request.

SDV-P pressure maintenance valve

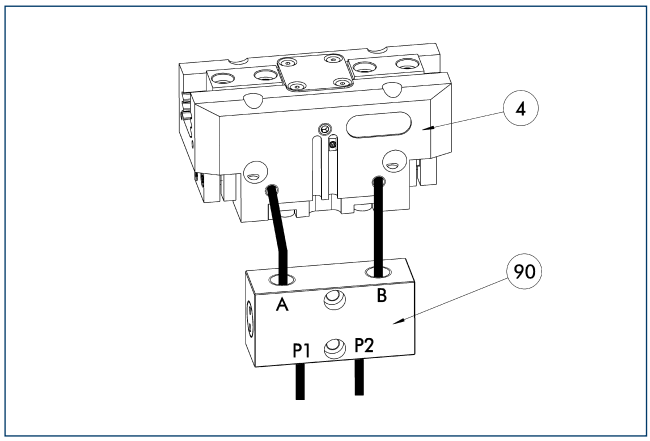

(4) Gripper

(90) SDV-P pressure maintenance valve

The SDV-P pressure maintenance valves ensure that the pressure in the piston chamber of pneumatic gripping, rotary, linear, and quick-change modules is maintained temporarily during an emergency stop.

Description	ID	
Pressure maintenance valve		
SDV-P 04	0403130	

HUE PGN-plus 40 protective cover

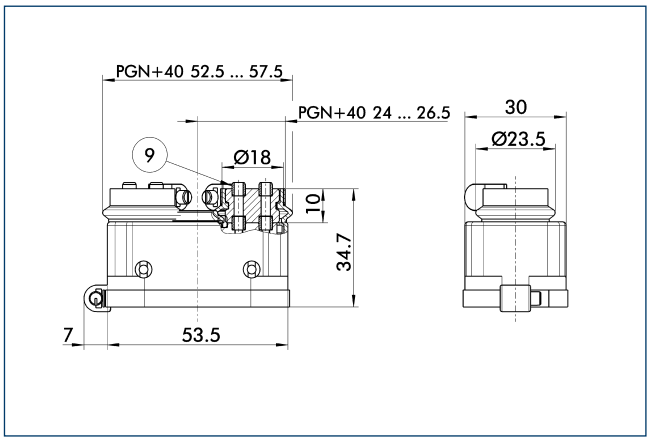

(9) For mounting screw connection diagram, see basic version

The HUE protective cover completely protects the gripper against external influences up to IP65 if an additional sealing of the cover bottom is provided as part of the application. The mounting diagram shifts by the height of the intermediate jaw.

Description	ID	Cleanroom class ISO 14644-1	IP class
Protection cover			
HUE PGN-plus 40	0371490	2	65

UZB 40 universal intermediate jaw

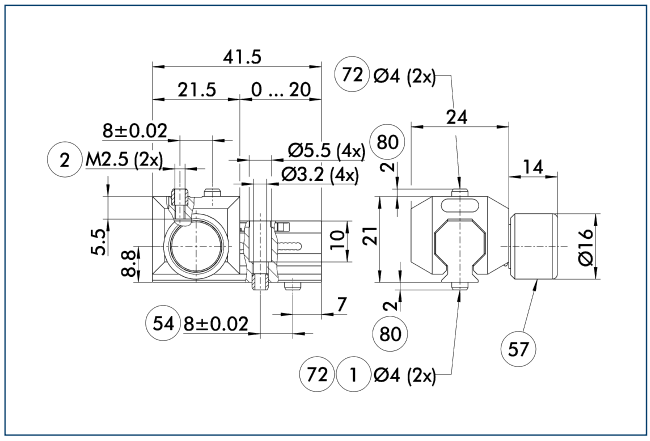

(1) Gripper connection

(2) Finger connection

(54) Optional right or left connection

(57) Locking

(72) Fit for centering sleeves

(80) Depth of the centering sleeve hole in the mating part

The universal intermediate jaw allows fast tool-free and reliable plugging and shifting of top jaws at the gripper.

Description	ID	Grid dimension [mm]
Universal intermediate jaw		
UZB 40	0300040	1
Finger blanks		
ABR-PGZN-plus 40	0300008	
SBR-PGZN-plus 40	0300018	

ABR- / SBR-PGZN-plus 40 finger blanks

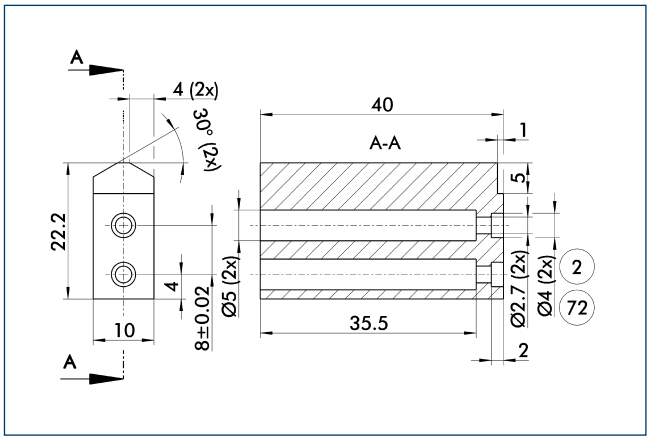

(2) Finger connection

(72) Fit for centering sleeves

Finger blanks for customized subsequent machining.

Description	ID	Material	Scope of delivery
Finger blanks			
ABR-PGZN-plus 40	0300008	Aluminum	1
SBR-PGZN-plus 40	0300018	16MnCr5	1

OAS-PGN-plus 40 object distance sensor

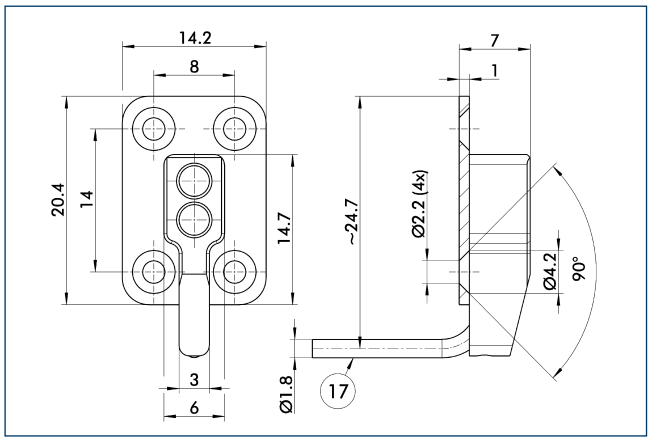

17 Cable outlet

Description	ID	
Object distance sensor		
OAS-PGN-plus 40	0308875	

Object distance sensor

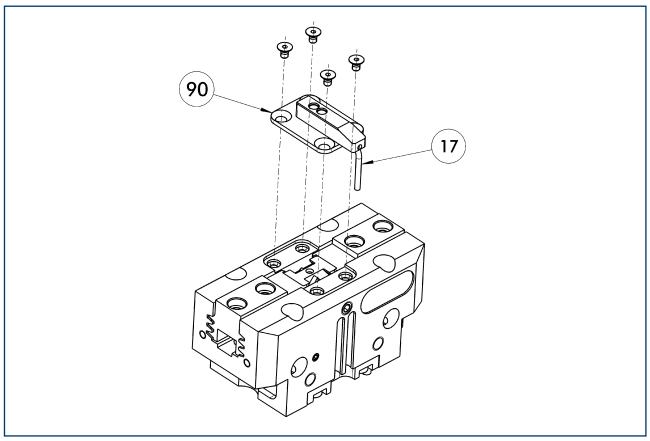

17 Cable outlet
90 OAS

Optical distance and presence sensor for direct mounting on the gripper. One OAS sensor per gripper can be assembled.

Description	ID	
Object distance sensor		
OAS-PGN-plus 40	0308875	
Electronic processor		
OAS-V09-D	0308865	
OAS-V10-A	0308867	
OAS-V10-D	0308866	

ⓘ The evaluation of the OAS can be done with either an analog or digital evaluation unit and with or without a display. The states which should be detected can be simply taught.

Attachment valves

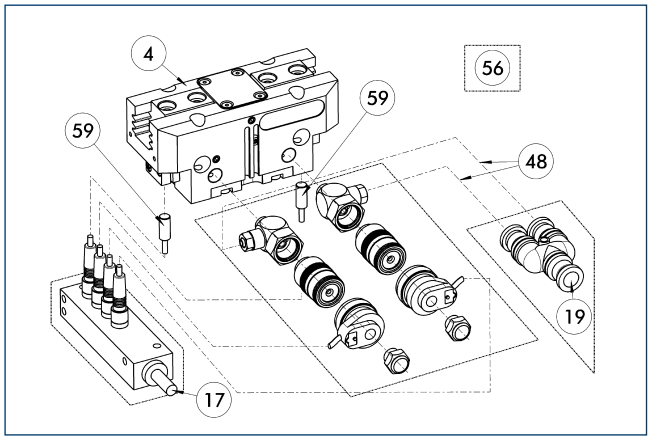

4 Gripper
17 Cable outlet
19 Air connection
48 Hose
56 Included in delivery
59 Monitoring gripping

For each unit one attachment valve ABV is required, optional with distributor for sensors and valves. Attachment valves increase the efficiency, reduce the installation work and air consumption and simplify air supply. For details please refer to the "Accessories" catalog section.

Description	ID	Often combined
Attachment valves		
ABV-MV15-M3	0303322	
ABV-MV15-M3-V2-M8	0303384	
ABV-MV15-M3-V4-M8	0303354	●
ABV-MV15-M3-V8-M8	0303355	

Modular assembly automation

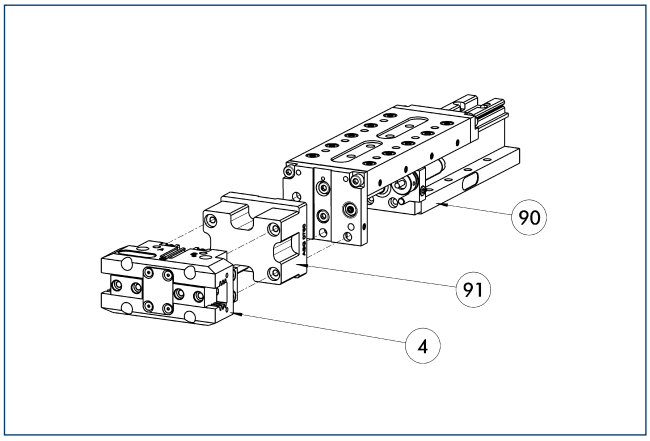

4 Gripper
90 CLM / KLM / LM / ELM / ELS / HLM linear module
91 ASG adapter plate

Gripper and linear modules can be combined with standard adapters out of the modular assembly system. For more information see our catalog "Modular Assembly Automation".

MMS electronic magnetic switches

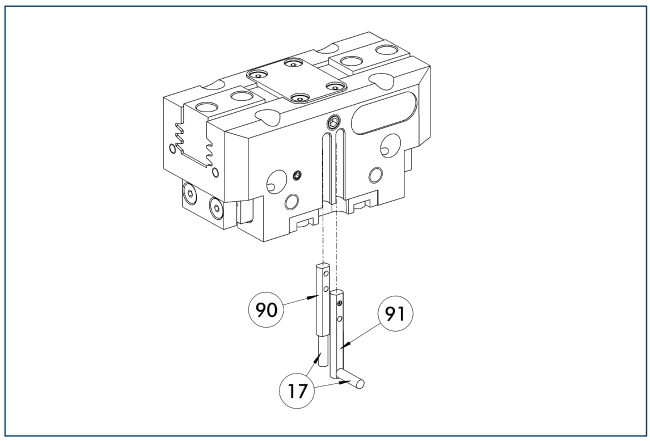

17 Cable outlet
91 MMS 22...-SA sensor
90 MMS 22... sensor

End position monitoring for mounting in the C-slot.

Description	ID	Often combined
MMS electronic magnetic switches		
MMS 22-S-M8-PNP	0301032	●
MMSK 22-S-PNP	0301034	
MMS electronic magnetic switches with lateral cable outlet		
MMS 22-S-M8-PNP-SA	0301042	●
MMSK 22-S-PNP-SA	0301044	
Cable extensions		
KV BW08-SG08 3P-0030-PNP	0301495	
KV BW08-SG08 3P-0100-PNP	0301496	
KV BW08-SG08 3P-0200-PNP	0301497	●
Clip for plug / socket		
CLI-M8	0301463	
Connection cables		
KA BG08-L 3P-0300-PNP	0301622	●
KA BG08-L 3P-0500-PNP	0301623	
KA BW08-L 3P-0300-PNP	0301594	
KA BW08-L 3P-0500-PNP	0301502	
Sensor distributor		
V2-M8	0301775	●
V4-M8	0301746	
V8-M8	0301751	

ⓘ Two sensors (closer/S) are required for each unit, plus extension cables as an option. Please note the minimum permitted bending radii for the sensor cables, which are generally 35 mm.

MMS PI1 programmable magnetic switches

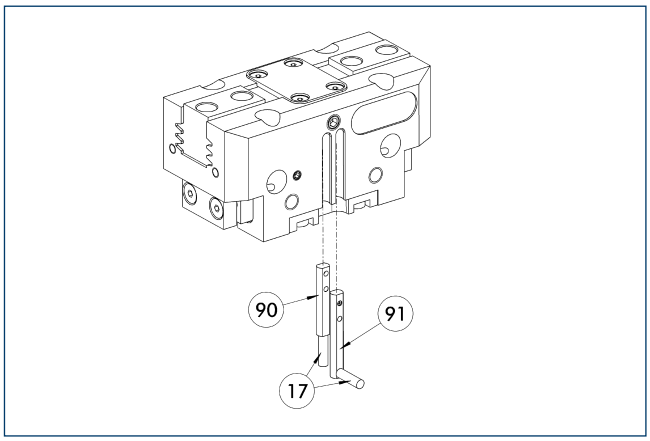

17 Cable outlet
91 MMS 22...-PI1-...-SA sensor
90 MMS 22...-PI1-... sensor

Position query with one programmable position per sensor and electronics integrated in sensor. Programmable via MT magnet teaching tool (included in the scope of delivery) or ST plug teaching tool (optional). Limit position query mounted in C-groove. If the ST plug teaching tools are listed in the table, teaching can only take place with the ST plug teaching tools.

Description	ID	Often combined
MMS PI1 programmable magnetic switches		
MMS 22-PI1-S-M8-PNP	0301160	●
MMSK 22-PI1-S-PNP	0301162	
MMS PI1-HD programmable magnetic switches with stainless steel housing		
MMS 22-PI1-S-M8-PNP-HD	0301110	●
MMSK 22-PI1-S-PNP-HD	0301112	
MMS PI1 programmable magnetic switches with lateral cable outlet		
MMS 22-PI1-S-M8-PNP-SA	0301166	●
MMSK 22-PI1-S-PNP-SA	0301168	

ⓘ Two sensors (closer/S) are required for each unit, plus extension cables as an option. Please note the minimum permitted bending radii for the sensor cables, which are generally 35 mm. Connection cable, cable extensions, and sensor distributors can be found in the table for the MMS 22.

MMS PI2 programmable magnetic switches

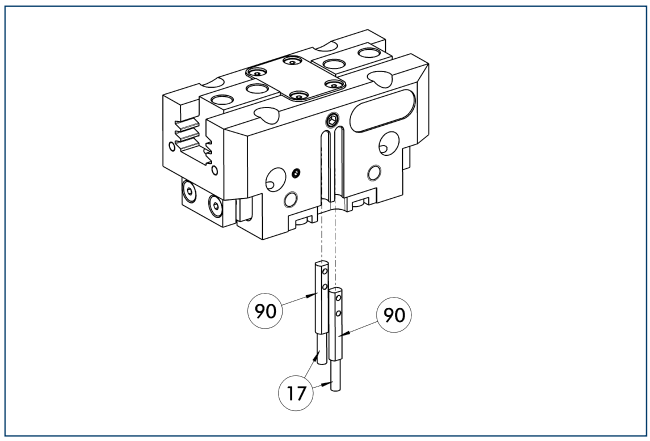

(17) Cable outlet (90) MMS 22...-PI2-... sensor

Position query with two programmable positions per sensor and electronics integrated in sensor. Programmable via MT magnet teaching tool (included in the scope of delivery) or ST plug teaching tool (optional). Limit position query mounted in C-groove. If the ST plug teaching tools are listed in the table, teaching can only take place with the ST plug teaching tools.

Description	ID	Often combined
MMS PI2 programmable magnetic switches		
MMS 22-PI2-S-M8-PNP	0301180	●
MMSK 22-PI2-S-PNP	0301182	
MMS PI2-HD programmable magnetic switches with stainless steel housing		
MMS 22-PI2-S-M8-PNP-HD	0301130	●
MMSK 22-PI2-S-PNP-HD	0301132	

ⓘ Per unit one sensor (closer/S) is required, optionally a cable extension. Please note the minimum permitted bending radii for the sensor cables, which are generally 35 mm. Connection cable, cable extensions, and sensor distributors can be found in the table for the MMS-P 22.

MMS-P programmable magnetic switches

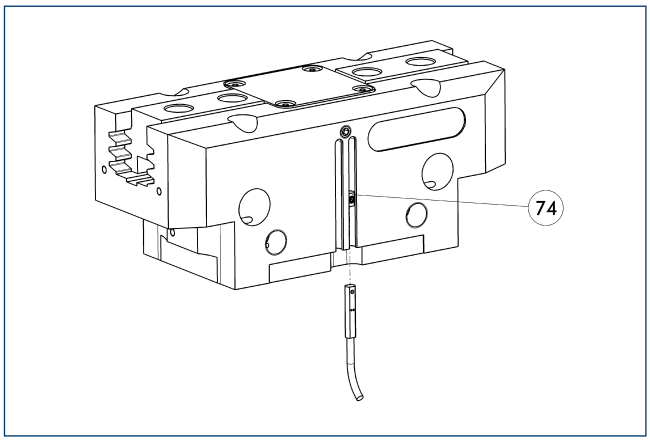

(74) Stop for MMS-P

Position monitoring with two programmable positions per sensor. The end position monitoring is mounted in the C-slot.

Description	ID	Often combined
MMS-P programmable magnetic switches		
MMSK-P 22-S-PNP	0301371	
MMS-P 22-S-M8-PNP	0301370	●
Clip for plug / socket		
CLI-M8	0301463	
Connection cables		
KA BG08-L 4P-0500	0307767	●
KA BG08-L 4P-1000	0307768	
KA BW08-L 4P-0500	0307765	
KA BW08-L 4P-1000	0307766	
Sensor distributor		
V2-M8-4P-2XM8-3P	0301380	

ⓘ Per unit one sensor (closer/S) is required, optionally a cable extension. Please note the minimum permitted bending radii for the sensor cables, which are generally 35 mm.

PGN-plus 50

SCHUNK Grippers pneumatic | 2-Finger Parallel Grippers | Universal Gripper

Gripping force, O.D. gripping

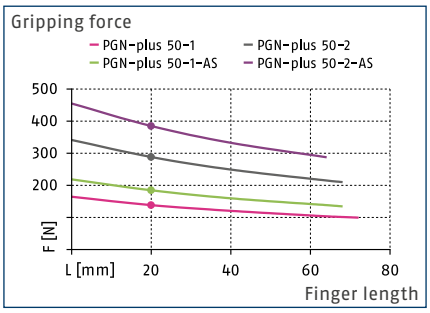

Gripping force, I.D. gripping

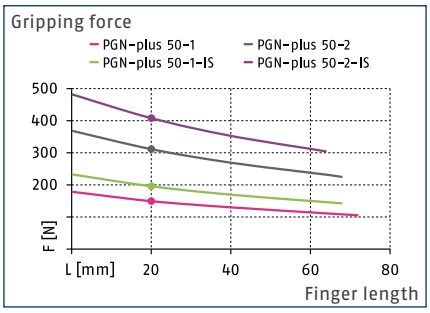

Finger load

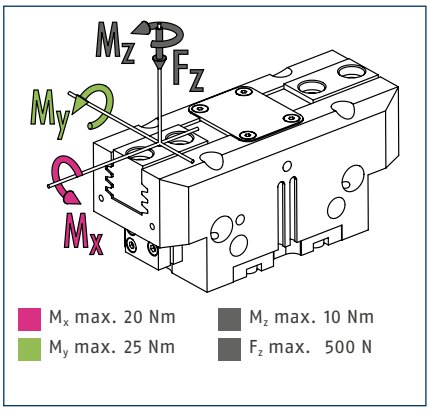

ⓘ The indicated moments and forces are static values, apply per base jaw and may occur simultaneously. M_y may arise in addition to the moment generated by the gripping force itself. If the max. permitted finger weight is exceeded, it is impreative to throttle the air supply so that the jaw movement occurs without any hitting or bouncing. Service life may be reduced.

Technical data

Description		PGN-plus 50-1	PGN-plus 50-2	PGN-plus 50-1-AS	PGN-plus 50-2-AS	PGN-plus 50-1-IS	PGN-plus 50-2-IS
ID		0371099	0371149	0371399	0371449	0371459	0371469
Stroke per jaw	[mm]	4	2	4	2	4	2
Closing- / opening force	[N]	140/145	290/310	185/-	385/-	-/190	-/405
min. spring force	[N]			45	95	45	95
Weight	[kg]	0.17	0.17	0.21	0.21	0.21	0.21
Recommended workpiece weight	[kg]	0.7	1.45	0.7	1.45	0.7	1.45
Fluid consumption per double stroke	[cm³]	5	5	8.5	8.5	11	11
min. / max. operating pressure	[bar]	2.5/8	2.5/8	4/6.5	4/6.5	4/6.5	4/6.5
Nominal operating pressure	[bar]	6	6	6	6	6	6
Closing- / opening time	[s]	0.02/0.02	0.02/0.02	0.02/0.03	0.02/0.03	0.03/0.02	0.03/0.02
Closing- / opening time only with spring	[s]			0.05	0.05	0.05	0.05
max. permitted finger length	[mm]	72	68	68	64	68	64
max. permitted weight per finger	[kg]	0.18	0.18	0.18	0.18	0.18	0.18
IP class		40	40	40	40	40	40
min. / max. ambient temperature	[°C]	5/90	5/90	5/90	5/90	5/90	5/90
Repeat accuracy	[mm]	0.01	0.01	0.01	0.01	0.01	0.01
Cleanroom class ISO 14644-1		5	5	5	5	5	5
Options and their characteristics							
Dust-tight version		37371099	37371149	37371399	37371449	37371459	37371469
IP class		64	64	64	64	64	64
Weight	[kg]	0.2	0.2	0.24	0.24	0.24	0.24
Anti-corrosion version		38371099	38371149	38371399	38371449	38371459	38371469
High-temperature version		39371099	39371149	39371399	39371449	39371459	39371469
min. / max. ambient temperature	[°C]	5/130	5/130	5/130	5/130	5/130	5/130
Force intensified version		0372099	0372149	0372399		0372459	
Closing- / opening force	[N]	250/260	520/560	295/-		-/305	
Weight	[kg]	0.21	0.21	0.26		0.26	
Maximum pressure	[bar]	6	6	6		6	
max. permitted finger length	[mm]	64	50	50		50	
Precision version		0371121	0371171	0371421	0371436		

ⓘ The full gripping force according to the data table is only realised after around 100 gripping cycles.

Main view

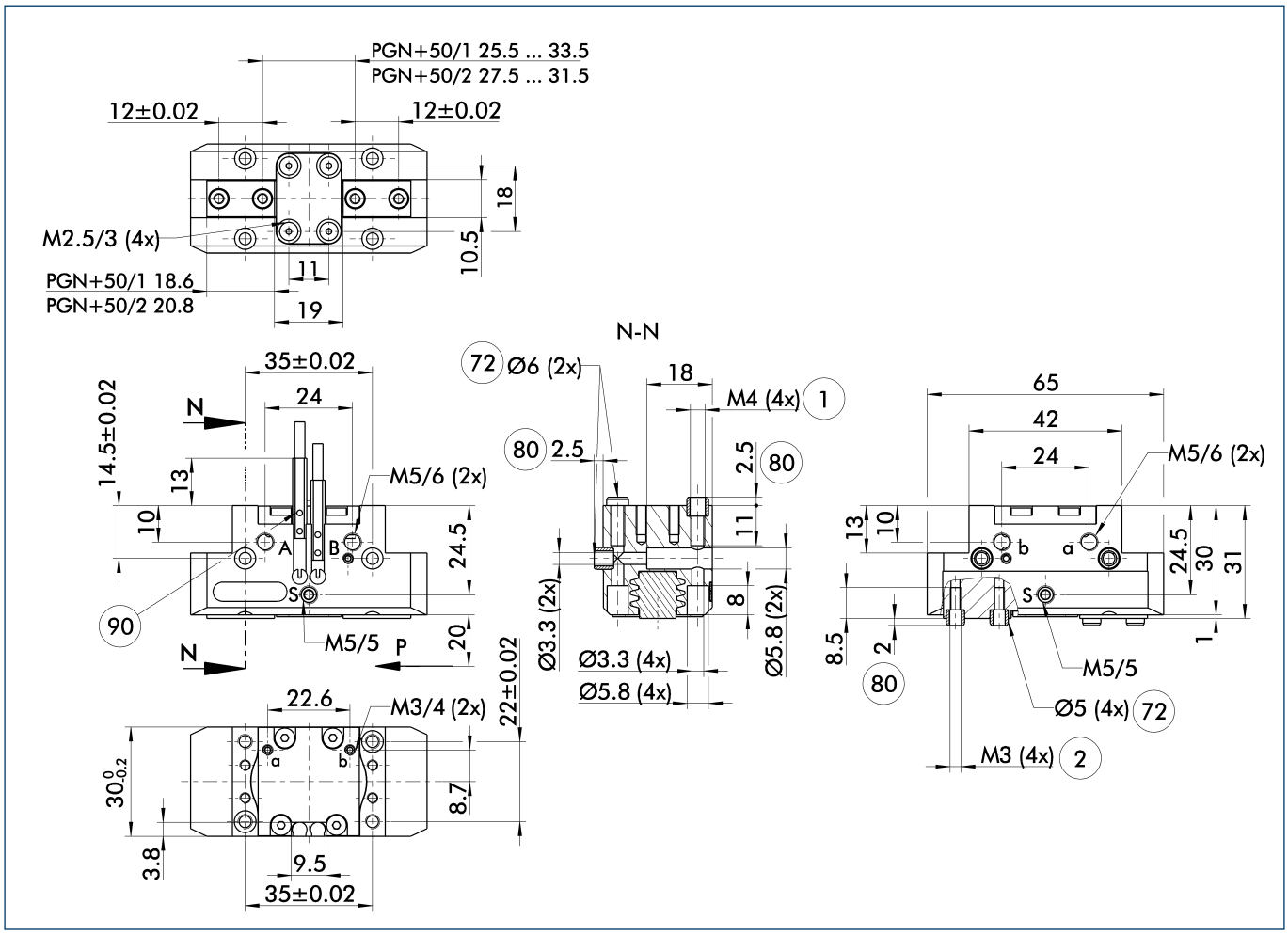

The drawing shows the gripper in the basic version with closed jaws, without dimensional consideration of the options described below.

ⓘ The SDV-P pressure maintenance valve can also be used for I.D. or O.D. gripping alternatively or in addition to the spring-loaded, mechanical gripping force maintenance device (see catalog section on "Accessories").

A, a Main / direct connection, gripper opening
B, b Main / direct connection, gripper closing
S Air purge connection (0.5 ... 1 bar)

1 Gripper connection
2 Finger connection
72 Fit for centering sleeves
80 Depth of the centering sleeve hole in the mating part
90 MMS 22... sensor

Maximum permitted finger projection

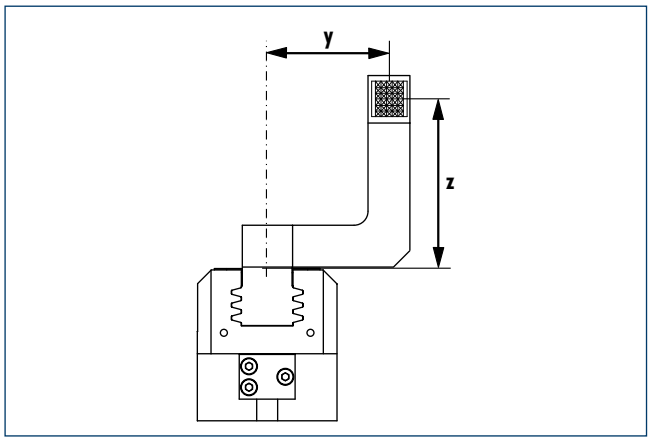

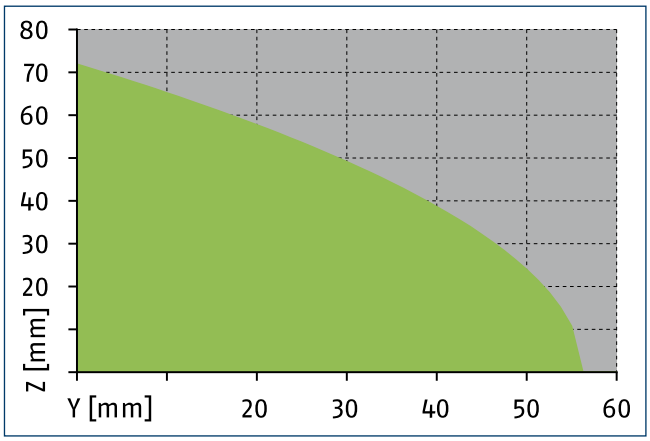

Permitted range Inadmissible range

The curve applies for the base version (Stroke -1). For other versions, the curve must be offset in parallel corresponding to the max. permissible finger length.

Hose-free direct connection M3

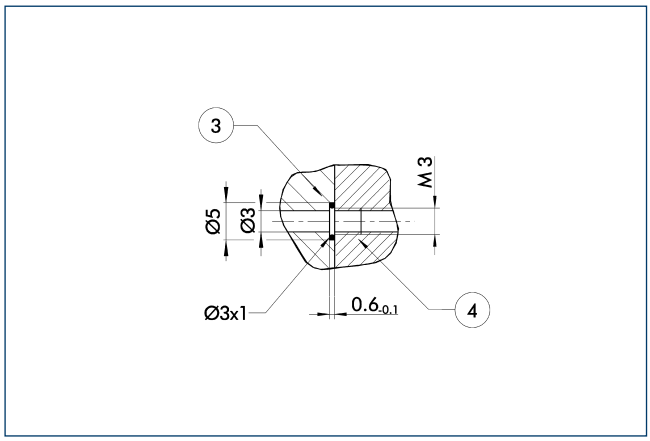

(3) Adapter (4) Gripper

The direct connection is used for supplying compressed air without hoses. Instead, the pressure medium is fed through bore-holes in the mounting plate.

Gripping force maintenance device AS / IS

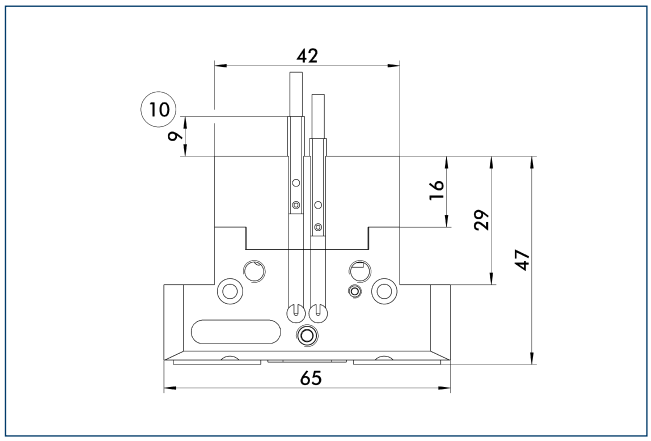

(10) Projection applies only for AS version

The mechanical maintenance of gripping force also assures a minimum gripping force in the case of a loss of pressure. With the AS / S variant, this acts as a closing force, and as an opening force for the IS variant. The maintenance of gripping force element can also be used as a means for increasing gripping force or for single actuated gripping.

Dust-tight version

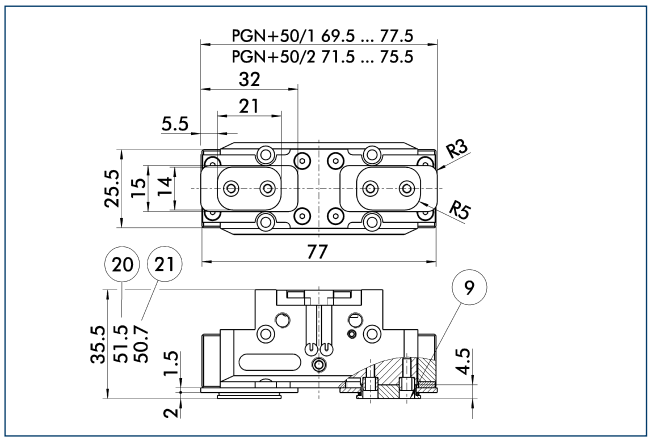

(9) For mounting screw connection diagram, see basic version
(20) For AS / IS version
(21) For KVZ version

The "dust-protection" option increases the degree of protection against penetrating substances. The screw connection diagram shifts by the height of the intermediate jaw. The finger length is still measured from the upper edge of the gripper housing.

Force intensified version

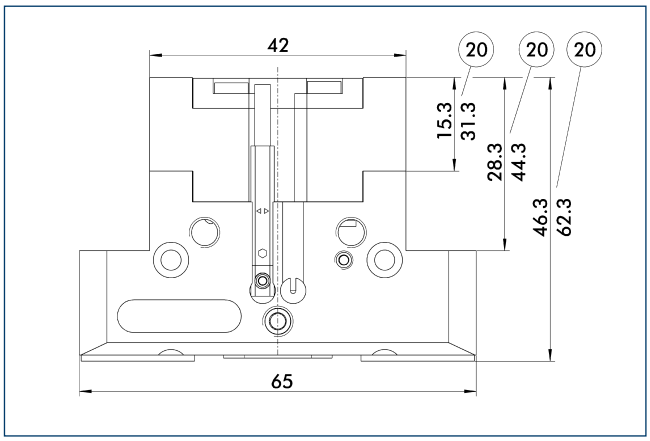

(20) For AS / IS version

The KVZ power booster cylinder increases gripping forces for opening and closing. A second piston connected in a series increases the force on the diagonal pull for this purpose. If applicable, observe the additional installation height for combination with an element for maintenance of gripping force.

Precision version

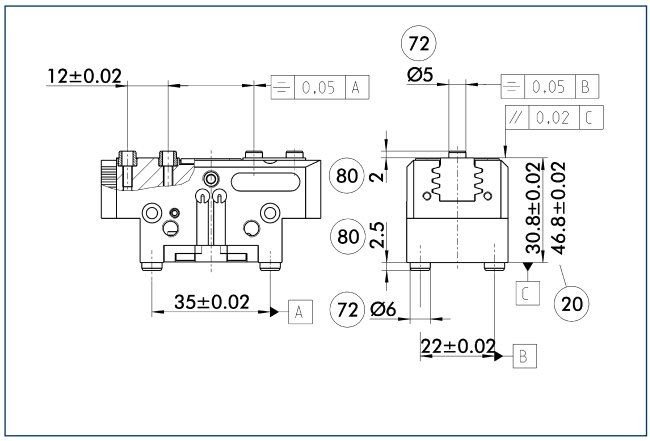

(20) For AS / IS version
(72) Fit for centering sleeves
(80) Depth of the centering sleeve hole in the mating part

The indicated tolerances just refer to the types of precision versions shown in the chart of technical specifications. All other types of precision versions are available on request.

SDV-P pressure maintenance valve

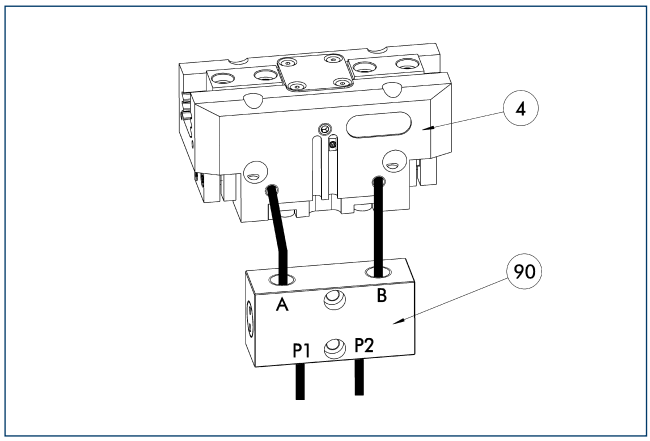

4 Gripper

90 SDV-P pressure maintenance valve

The SDV-P pressure maintenance valves ensure that the pressure in the piston chamber of pneumatic gripping, rotary, linear, and quick-change modules is maintained temporarily during an emergency stop.

Description	ID	
Pressure maintenance valve		
SDV-P 04	0403130	

HUE PGN-plus 50 protective cover

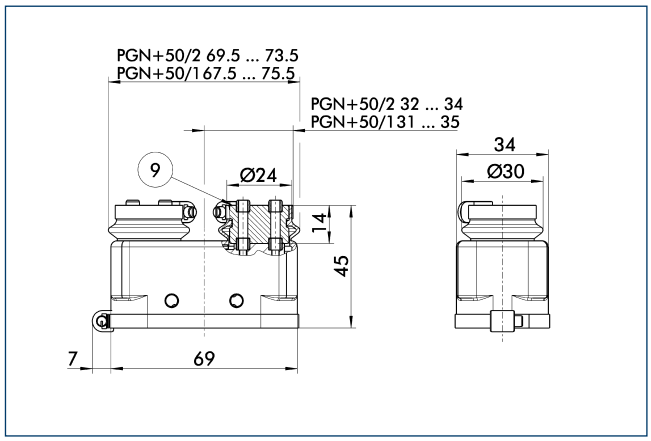

9 For mounting screw connection diagram, see basic version

The HUE protective cover completely protects the gripper against external influences up to IP65 if an additional sealing of the cover bottom is provided as part of the application. The mounting diagram shifts by the height of the intermediate jaw.

Description	ID	Cleanroom class ISO 14644-1	IP class
Protection cover			
HUE PGN-plus 50	0371479	2	65

BSWS jaw quick-change systems

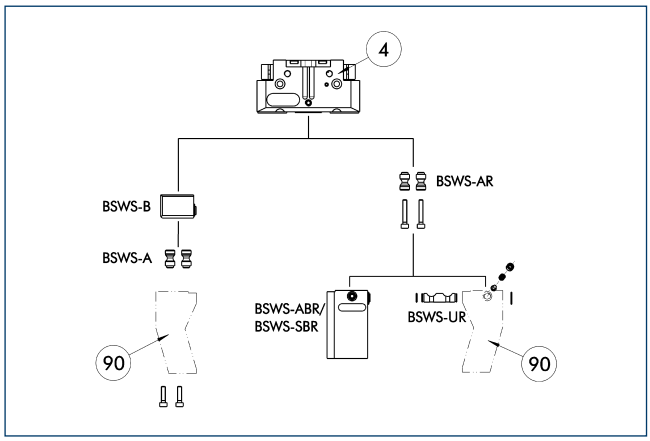

(4) Gripper
(90) Customized gripper fingers

There are various jaw quick-change systems available for the grippers. For detailed information, refer to the appropriate product.

Description	ID	
Jaw quick-change system adapter		
BSWS-AR 50	0300091	
BSWS-A 50	0303020	
Jaw quick-change system base		
BSWS-B 50	0303021	
Finger blanks with jaw quick-change system		
BSWS-ABR-PGZN-plus 50	0300071	
BSWS-SBR-PGZN-plus 50	0300081	
Jaw quick-change system reversed		
BSWS-UR 50	0302990	

ⓘ Only the systems listed in the table can be used.

ZBA L-plus 50 intermediate jaws

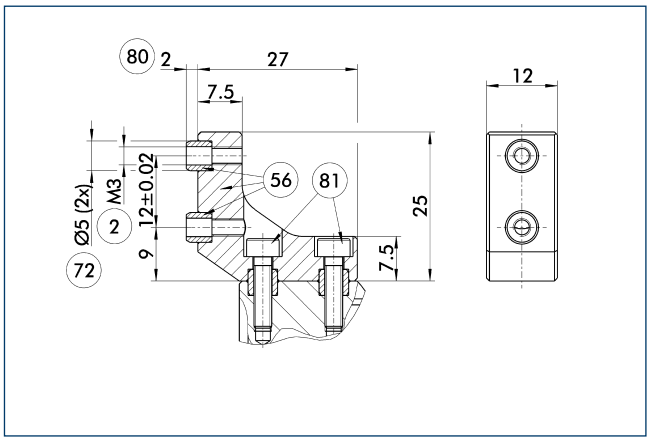

(2) Finger connection
(56) Included in delivery
(72) Fit for centering sleeves
(80) Depth of the centering sleeve hole in the mating part
(81) Not included in the scope of delivery

Optionally intermediate jaws can be used, enabling direct connection and alignment of top jaws and various standard accessories in Z-direction.

Description	ID	Material	Scope of delivery
Intermediate jaws			
ZBA-L-plus 50	0311712	Aluminum	1

UZB 50 universal intermediate jaw

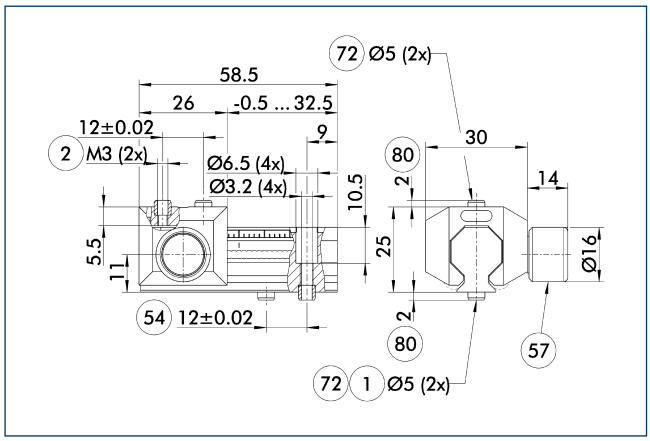

1 Gripper connection
2 Finger connection
54 Optional right or left connection
57 Locking
72 Fit for centering sleeves
80 Depth of the centering sleeve hole in the mating part

The universal intermediate jaw allows fast tool-free and reliable plugging and shifting of top jaws at the gripper.

Description	ID	Grid dimension [mm]
Universal intermediate jaw		
UZB 50	0300041	1.5
Finger blanks		
ABR-PGZN-plus 50	0300009	
SBR-PGZN-plus 50	0300019	

FMS-ZBA / ZBP 50 force-measuring jaws

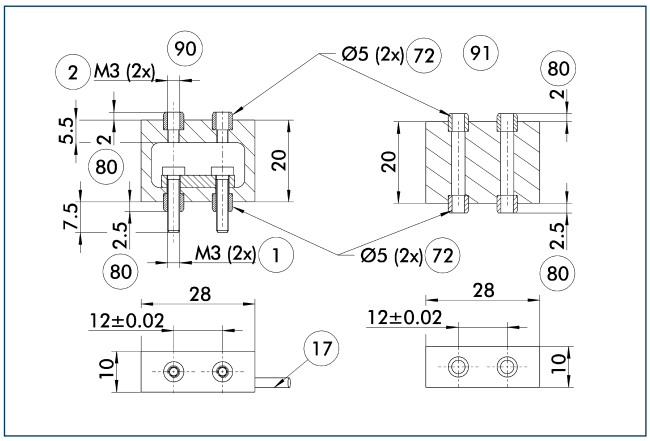

1 Gripper connection
2 Finger connection
17 Cable outlet
72 Fit for centering sleeves
80 Depth of the centering sleeve hole in the mating part
90 Active intermediate jaws
91 Passive intermediate jaws

Force measuring jaws measure gripping forces, but can also determine workpiece weights or dimensional deviations. There are active and passive intermediate jaws (FMS-ZBA or FMS-ZBP). At least one active force measuring jaw is required per gripper, the rest can be passive. For each active jaw, a FMS-A control unit and a FMS-AK connection cable are required.

Description	ID	Often combined
Active intermediate jaws		
FMS-ZBA 50	0301830	
Passive intermediate jaws		
FMS-ZBP 50	0301831	
Connection cables		
FMS-AK0200	0301820	●
FMS-AK0500	0301821	
FMS-AK1000	0301822	
FMS-AK2000	0301823	
Electronic processor		
FMS-A1	0301810	

ABR- / SBR-PGZN-plus 50 finger blanks

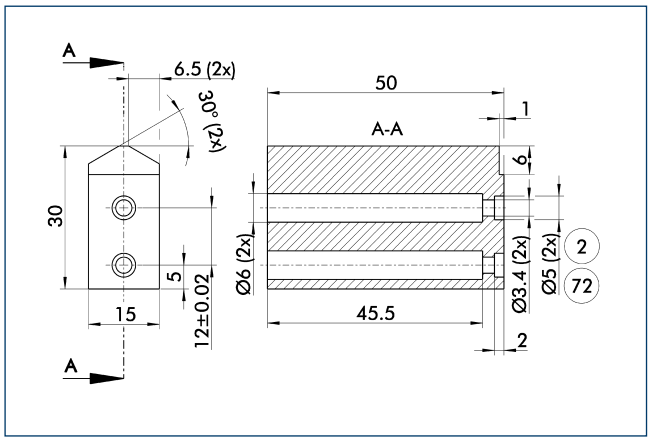

(2) Finger connection (72) Fit for centering sleeves

Finger blanks for customized subsequent machining.

Description	ID	Material	Scope of delivery
Finger blanks			
ABR-PGZN-plus 50	0300009	Aluminum	1
SBR-PGZN-plus 50	0300019	16MnCr5	1

OAS-PGN-plus 50 object distance sensor

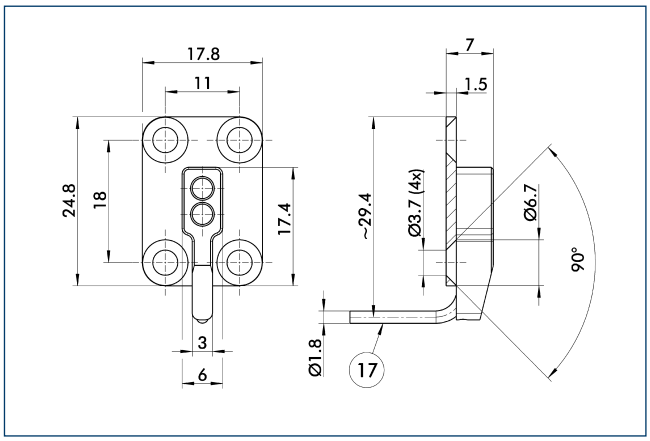

(17) Cable outlet

Description	ID	
Object distance sensor		
OAS-PGN-plus 50	0308876	

Object distance sensor

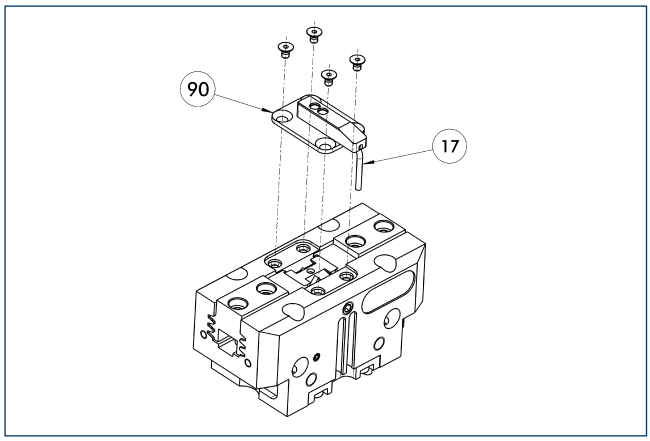

(17) Cable outlet (90) OAS

Optical distance and presence sensor for direct mounting on the gripper. One OAS sensor per gripper can be assembled.

Description	ID	
Object distance sensor		
OAS-PGN-plus 50	0308876	
Electronic processor		
OAS-V09-D	0308865	
OAS-V10-A	0308867	
OAS-V10-D	0308866	

ⓘ The evaluation of the OAS can be done with either an analog or digital evaluation unit and with or without a display. The states which should be detected can be simply taught.

Attachment valves

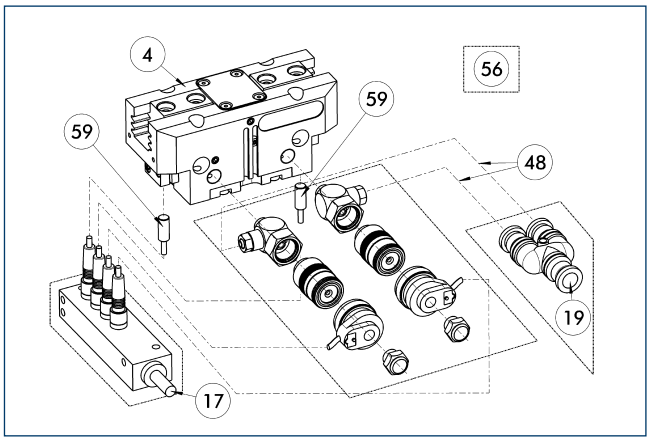

(4) Gripper (48) Hose
(17) Cable outlet (56) Included in delivery
(19) Air connection (59) Monitoring gripping

For each unit one attachment valve ABV is required, optional with distributor for sensors and valves. Attachment valves increase the efficiency, reduce the installation work and air consumption and simplify air supply. For details please refer to the "Accessories" catalog section.

Description	ID	Often combined
Attachment valves		
ABV-MV15-M5	0303323	
ABV-MV15-M5-V2-M8	0303386	
ABV-MV15-M5-V4-M8	0303356	●
ABV-MV15-M5-V8-M8	0303357	

Modular assembly automation

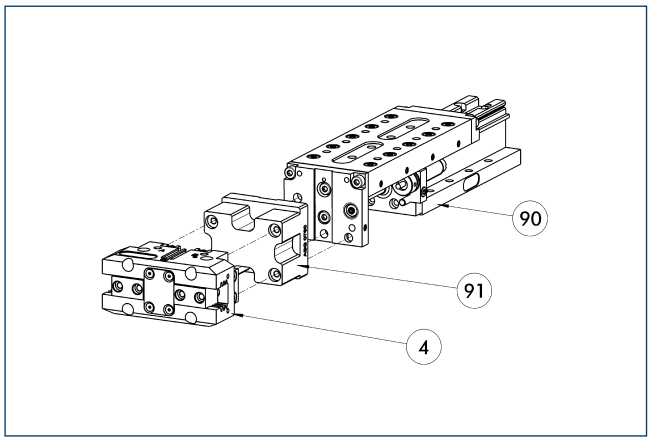

(4) Gripper
(91) ASG adapter plate
(90) CLM / KLM / LM / ELM / ELS / HLM linear module

Gripper and linear modules can be combined with standard adapters out of the modular assembly system. For more information see our catalog "Modular Assembly Automation".

MMS electronic magnetic switches

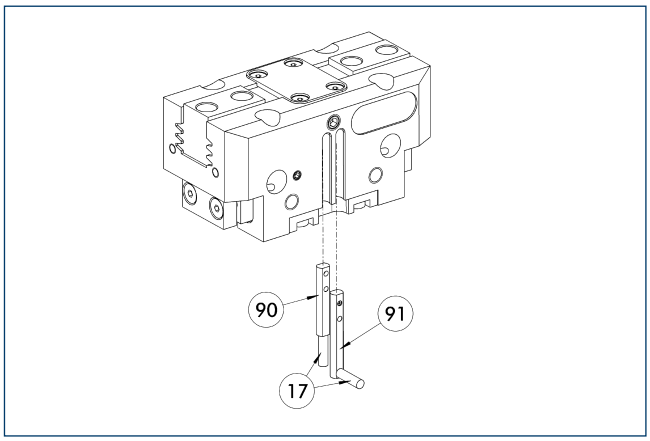

(17) Cable outlet
(91) MMS 22...-SA sensor
(90) MMS 22... sensor

End position monitoring for mounting in the C-slot.

Description	ID	Often combined
MMS electronic magnetic switches		
MMS 22-S-M8-PNP	0301032	●
MMSK 22-S-PNP	0301034	
MMS electronic magnetic switches with lateral cable outlet		
MMS 22-S-M8-PNP-SA	0301042	●
MMSK 22-S-PNP-SA	0301044	
Cable extensions		
KV BW08-SG08 3P-0030-PNP	0301495	
KV BW08-SG08 3P-0100-PNP	0301496	
KV BW08-SG08 3P-0200-PNP	0301497	●
Clip for plug / socket		
CLI-M8	0301463	
Connection cables		
KA BG08-L 3P-0300-PNP	0301622	●
KA BG08-L 3P-0500-PNP	0301623	
KA BW08-L 3P-0300-PNP	0301594	
KA BW08-L 3P-0500-PNP	0301502	
Sensor distributor		
V2-M8	0301775	●
V4-M8	0301746	
V8-M8	0301751	

ⓘ Two sensors (closer/S) are required for each unit, plus extension cables as an option. Please note the minimum permitted bending radii for the sensor cables, which are generally 35 mm.

MMS PI1 programmable magnetic switches

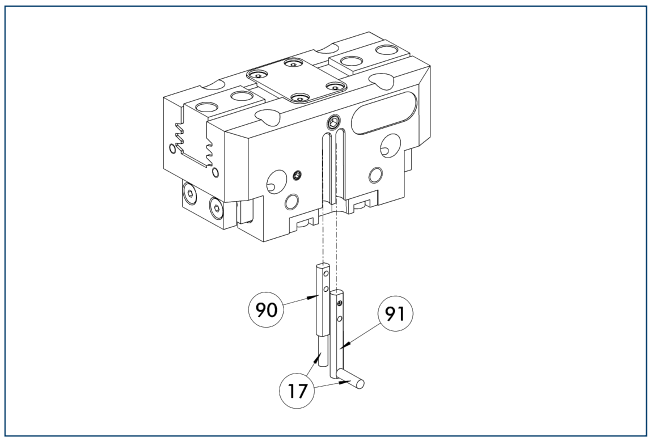

(17) Cable outlet
(91) MMS 22...-PI1-...-SA sensor
(90) MMS 22...-PI1-... sensor

Position query with one programmable position per sensor and electronics integrated in sensor. Programmable via MT magnet teaching tool (included in the scope of delivery) or ST plug teaching tool (optional). Limit position query mounted in C-groove. If the ST plug teaching tools are listed in the table, teaching can only take place with the ST plug teaching tools.

Description	ID	Often combined
MMS PI1 programmable magnetic switches		
MMS 22-PI1-S-M8-PNP	0301160	●
MMSK 22-PI1-S-PNP	0301162	
MMS PI1-HD programmable magnetic switches with stainless steel housing		
MMS 22-PI1-S-M8-PNP-HD	0301110	●
MMSK 22-PI1-S-PNP-HD	0301112	
MMS PI1 programmable magnetic switches with lateral cable outlet		
MMS 22-PI1-S-M8-PNP-SA	0301166	●
MMSK 22-PI1-S-PNP-SA	0301168	

ⓘ Two sensors (closer/S) are required for each unit, plus extension cables as an option. Please note the minimum permitted bending radii for the sensor cables, which are generally 35 mm. Connection cable, cable extensions, and sensor distributors can be found in the table for the MMS 22.

MMS PI2 programmable magnetic switches

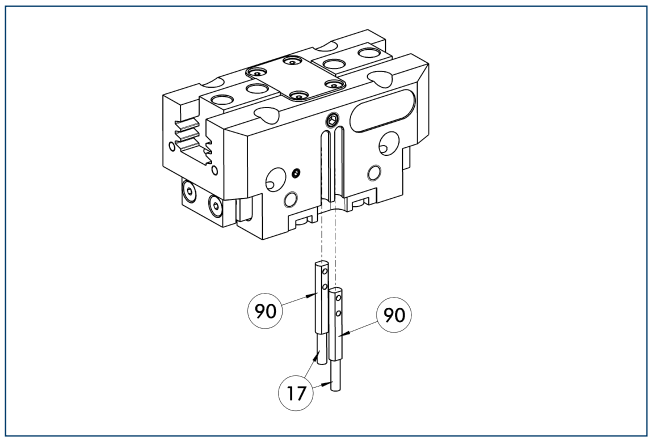

(17) Cable outlet
(90) MMS 22...-PI2-... sensor

Position query with two programmable positions per sensor and electronics integrated in sensor. Programmable via MT magnet teaching tool (included in the scope of delivery) or ST plug teaching tool (optional). Limit position query mounted in C-groove. If the ST plug teaching tools are listed in the table, teaching can only take place with the ST plug teaching tools.

Description	ID	Often combined
MMS PI2 programmable magnetic switches		
MMS 22-PI2-S-M8-PNP	0301180	●
MMSK 22-PI2-S-PNP	0301182	
MMS PI2-HD programmable magnetic switches with stainless steel housing		
MMS 22-PI2-S-M8-PNP-HD	0301130	●
MMSK 22-PI2-S-PNP-HD	0301132	

ⓘ Per unit one sensor (closer/S) is required, optionally a cable extension. Please note the minimum permitted bending radii for the sensor cables, which are generally 35 mm. Connection cable, cable extensions, and sensor distributors can be found in the table for the MMS-P 22.

MMS-P programmable magnetic switches

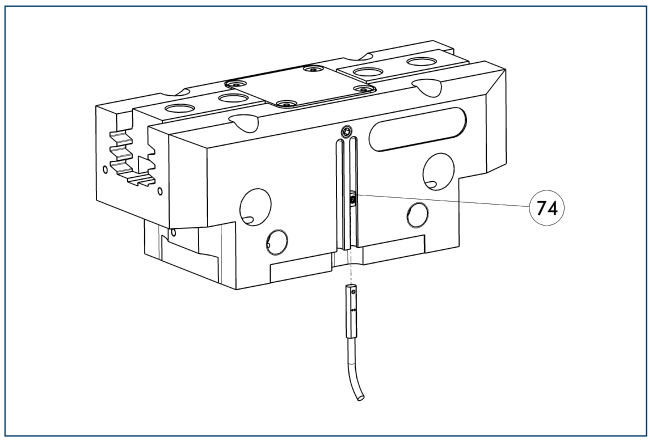

74 Stop for MMS-P

Position monitoring with two programmable positions per sensor. The end position monitoring is mounted in the C-slot.

Description	ID	Often combined
MMS-P programmable magnetic switches		
MMSK-P 22-S-PNP	0301371	
MMS-P 22-S-M8-PNP	0301370	●
Clip for plug / socket		
CLI-M8	0301463	
Connection cables		
KA BG08-L 4P-0500	0307767	●
KA BG08-L 4P-1000	0307768	
KA BW08-L 4P-0500	0307765	
KA BW08-L 4P-1000	0307766	
Sensor distributor		
V2-M8-4P-2XM8-3P	0301380	

ⓘ Per unit one sensor (closer/S) is required, optionally a cable extension. Please note the minimum permitted bending radii for the sensor cables, which are generally 35 mm.

PGN-plus 64

SCHUNK Grippers pneumatic | 2-Finger Parallel Grippers | Universal Gripper

Gripping force, O.D. gripping

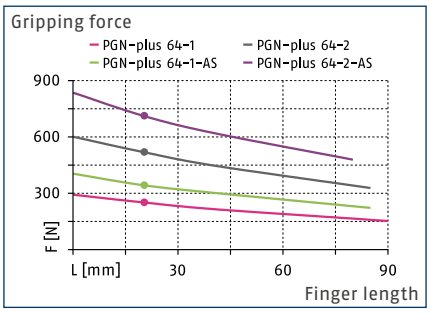

Gripping force, I.D. gripping

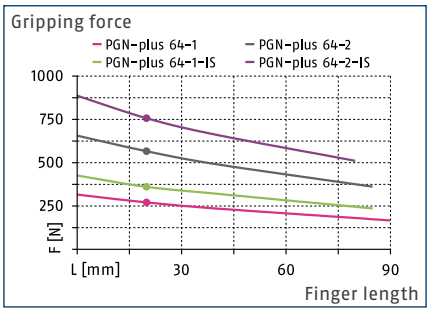

Finger load

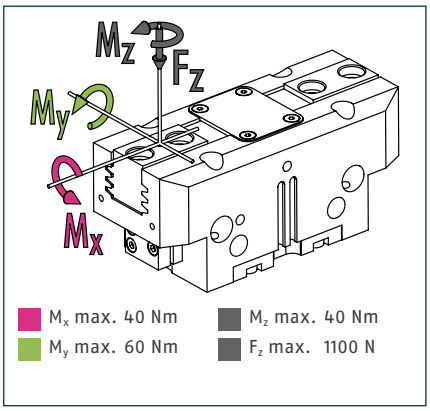

ⓘ The indicated moments and forces are static values, apply per base jaw and may occur simultaneously. M_y may arise in addition to the moment generated by the gripping force itself. If the max. permitted finger weight is exceeded, it is impreative to throttle the air supply so that the jaw movement occurs without any hitting or bouncing. Service life may be reduced.

Technical data

Description		PGN-plus 64-1	PGN-plus 64-2	PGN-plus 64-1-AS	PGN-plus 64-2-AS	PGN-plus 64-1-IS	PGN-plus 64-2-IS
ID		0371090	0371091	0371092	0371093	0371094	0371095
Stroke per jaw	[mm]	6	3	6	3	6	3
Closing- / opening force	[N]	250/270	520/565	340/-	710/-	-/360	-/755
min. spring force	[N]			90	190	90	190
Weight	[kg]	0.28	0.28	0.37	0.37	0.37	0.37
Recommended workpiece weight	[kg]	1.25	2.6	1.25	2.6	1.25	2.6
Fluid consumption per double stroke	[cm³]	10	10	17	17	21	21
min. / max. operating pressure	[bar]	2.5/8	2.5/8	4/6.5	4/6.5	4/6.5	4/6.5
Nominal operating pressure	[bar]	6	6	6	6	6	6
Closing- / opening time	[s]	0.03/0.03	0.03/0.03	0.02/0.04	0.02/0.04	0.04/0.02	0.04/0.02
Closing- / opening time only with spring	[s]			0.08	0.08	0.08	0.08
max. permitted finger length	[mm]	90	85	85	80	85	80
max. permitted weight per finger	[kg]	0.35	0.35	0.35	0.35	0.35	0.35
IP class		40	40	40	40	40	40
min. / max. ambient temperature	[°C]	5/90	5/90	5/90	5/90	5/90	5/90
Repeat accuracy	[mm]	0.01	0.01	0.01	0.01	0.01	0.01
Cleanroom class ISO 14644-1		5	5	5	5	5	5
Options and their characteristics							
Dust-tight version		37371090	37371091	37371092	37371093	37371094	37371095
IP class		64	64	64	64	64	64
Weight	[kg]	0.35	0.35	0.44	0.44	0.44	0.44
Anti-corrosion version		38371090	38371091	38371092	38371093	38371094	38371095
High-temperature version		39371090	39371091	39371092	39371093	39371094	39371095
min. / max. ambient temperature	[°C]	5/130	5/130	5/130	5/130	5/130	5/130
Force intensified version		0372090	0372091	0372092		0372093	
Closing- / opening force	[N]	450/485	935/1015	540/-		-/575	
Weight	[kg]	0.35	0.35	0.43		0.43	
Maximum pressure	[bar]	6	6	6		6	
max. permitted finger length	[mm]	80	64	64		64	
Precision version		0371122	0371172	0371422	0371437		

ⓘ The full gripping force according to the data table is only realised after around 100 gripping cycles.

Main view

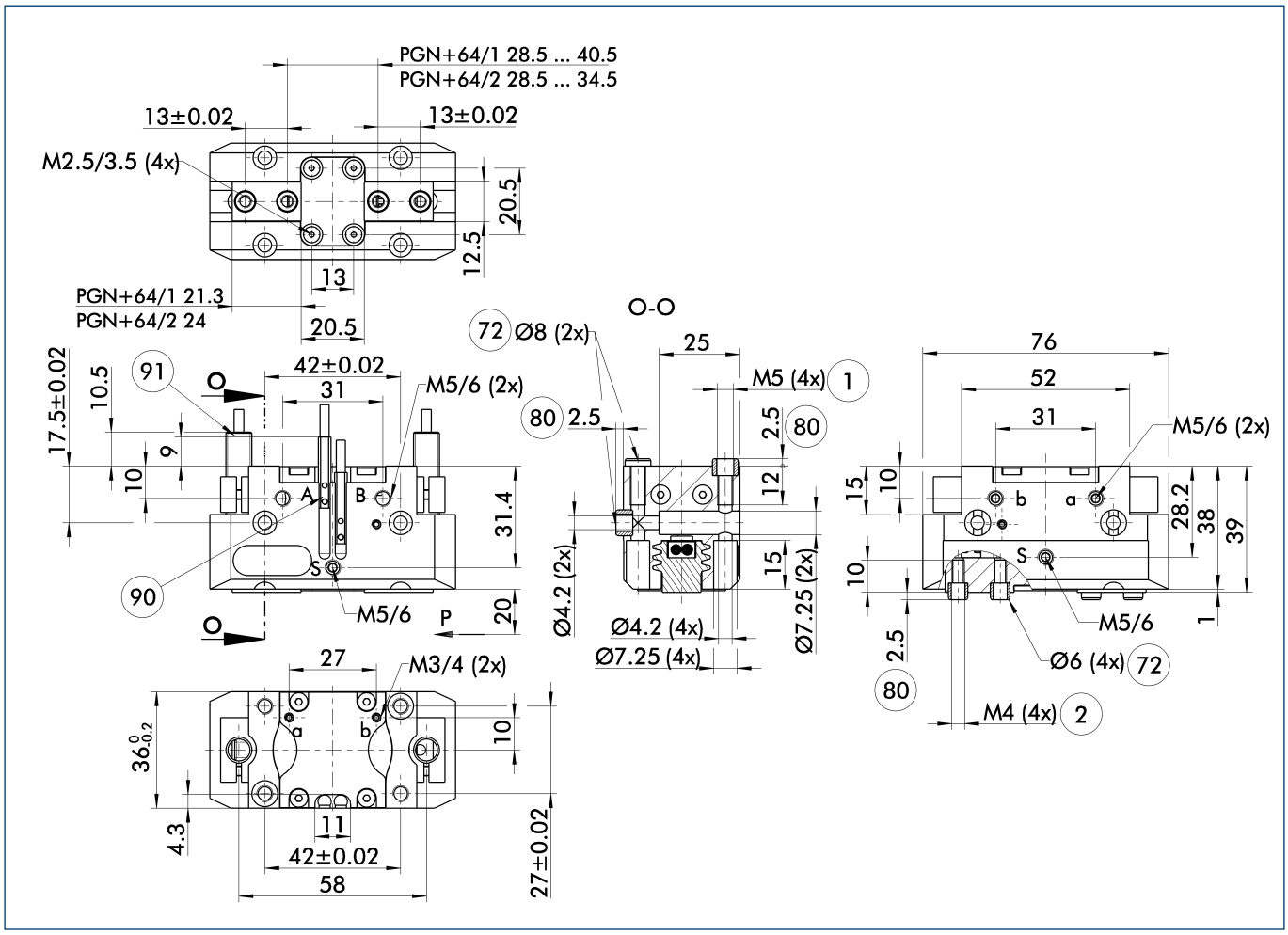

The drawing shows the gripper in the basic version with closed jaws, without dimensional consideration of the options described below.

ⓘ The SDV-P pressure maintenance valve can also be used for I.D. or O.D. gripping alternatively or in addition to the spring-loaded, mechanical gripping force maintenance device (see catalog section on "Accessories").

A, a Main / direct connection, gripper opening

B, b Main / direct connection, gripper closing

S Air purge connection (0.5 ... 1 bar)

(1) Gripper connection

(2) Finger connection

(72) Fit for centering sleeves

(80) Depth of the centering sleeve hole in the mating part

(90) MMS 22... sensor

(91) IN ... sensor

Maximum permitted finger projection

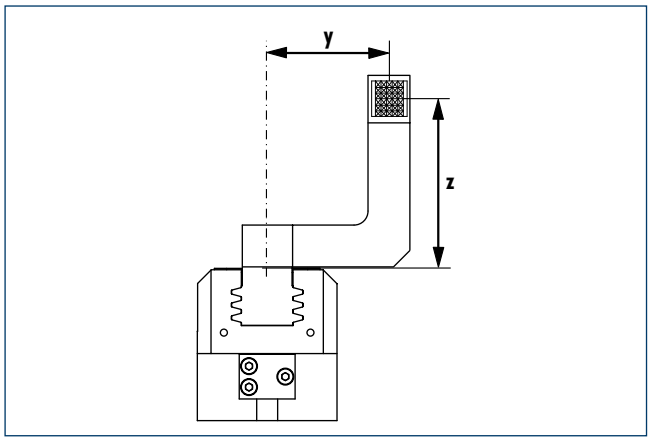

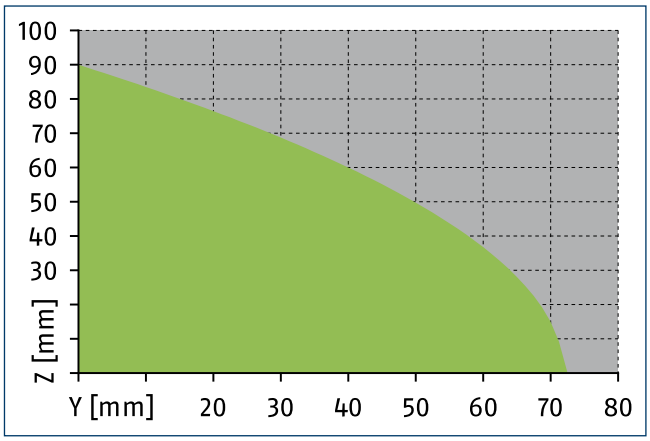

Permitted range

Inadmissible range

The curve applies for the base version (Stroke -1). For other versions, the curve must be offset in parallel corresponding to the max. permissible finger length.

Hose-free direct connection M3

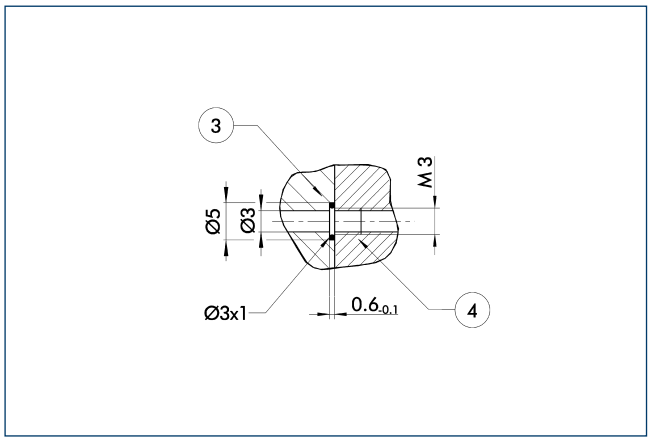

3 Adapter

4 Gripper

The direct connection is used for supplying compressed air without hoses. Instead, the pressure medium is fed through bore-holes in the mounting plate.

Gripping force maintenance device AS / IS

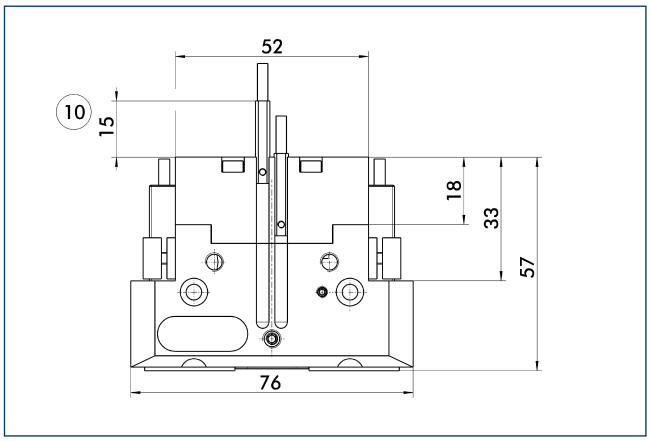

10 Projection applies only for AS version

The mechanical maintenance of gripping force also assures a minimum gripping force in the case of a loss of pressure. With the AS / S variant, this acts as a closing force, and as an opening force for the IS variant. The maintenance of gripping force element can also be used as a means for increasing gripping force or for single actuated gripping.

Dust-tight version

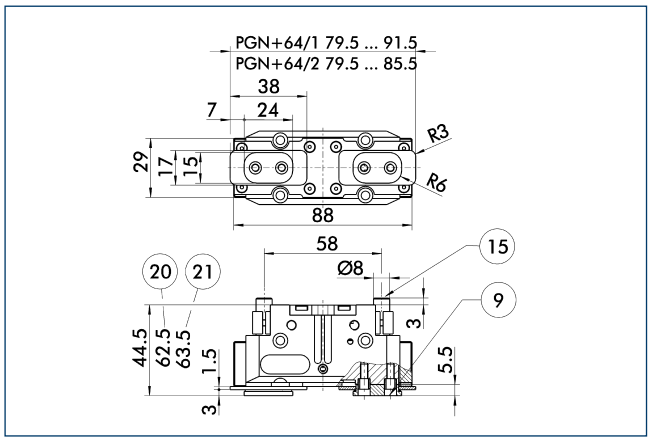

(9) For mounting screw connection diagram, see basic version
(15) Sealing bolt
(20) For AS / IS version
(21) For KVZ version

The "dust-protection" option increases the degree of protection against penetrating substances. The screw connection diagram shifts by the height of the intermediate jaw. The finger length is still measured from the upper edge of the gripper housing.

Force intensified version

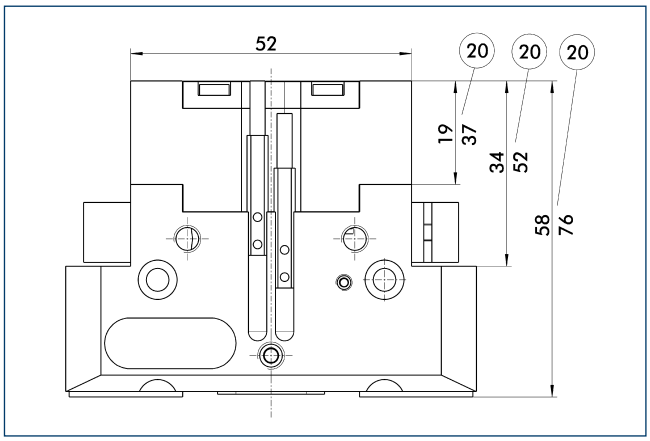

(20) For AS / IS version

The KVZ power booster cylinder increases gripping forces for opening and closing. A second piston connected in a series increases the force on the diagonal pull for this purpose. If applicable, observe the additional installation height for combination with an element for maintenance of gripping force.

Precision version

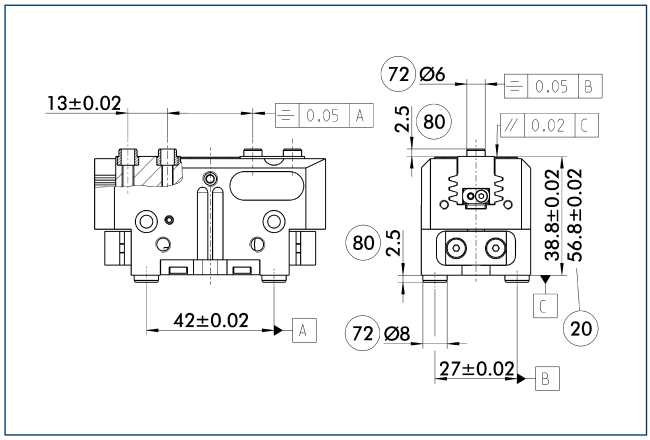

(20) For AS / IS version
(72) Fit for centering sleeves
(80) Depth of the centering sleeve hole in the mating part

The indicated tolerances just refer to the types of precision versions shown in the chart of technical specifications. All other types of precision versions are available on request.

SDV-P pressure maintenance valve

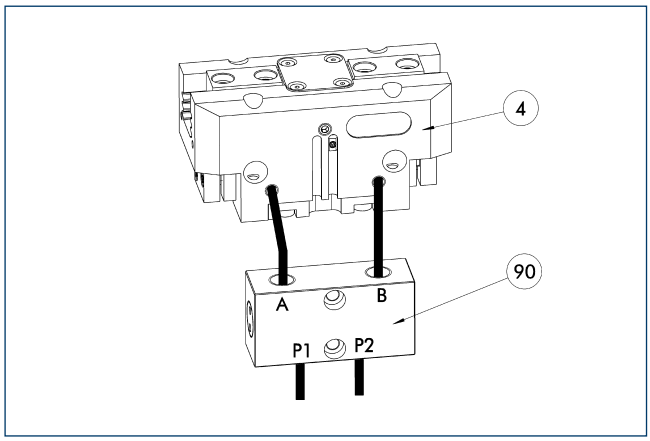

(4) Gripper

(90) SDV-P pressure maintenance valve

The SDV-P pressure maintenance valves ensure that the pressure in the piston chamber of pneumatic gripping, rotary, linear, and quick-change modules is maintained temporarily during an emergency stop.

Description	ID	
Pressure maintenance valve		
SDV-P 04	0403130	

HUE PGN-plus 64 protective cover

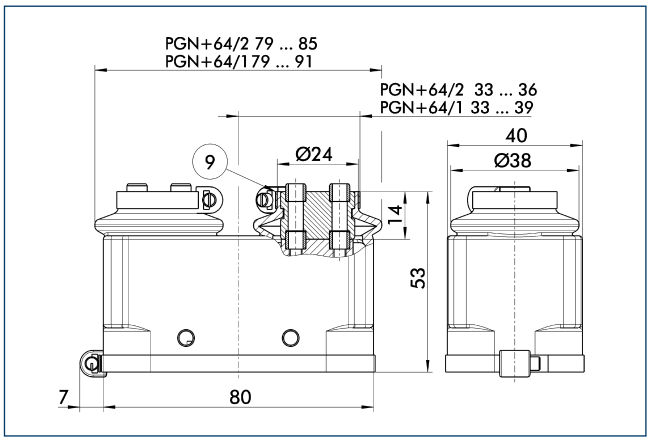

(9) For mounting screw connection diagram, see basic version

The HUE protective cover completely protects the gripper against external influences up to IP65 if an additional sealing of the cover bottom is provided as part of the application. The mounting diagram shifts by the height of the intermediate jaw.

Description	ID	Cleanroom class ISO 14644-1	IP class
Protection cover			
HUE PGN-plus 64	0371480	2	65

BSWS jaw quick-change systems

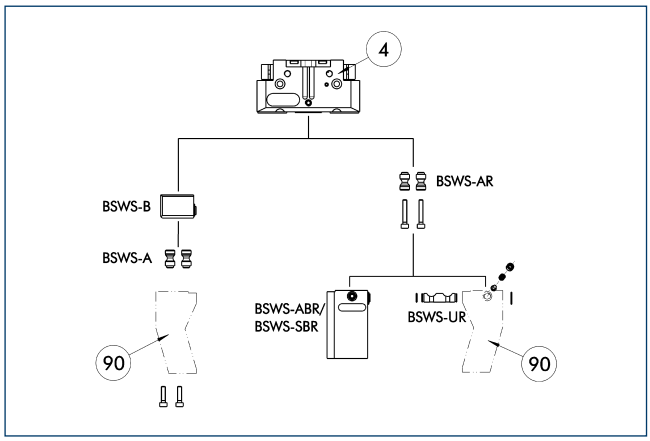

(4) Gripper
(90) Customized gripper fingers

There are various jaw quick-change systems available for the grippers. For detailed information, refer to the appropriate product.

Description	ID	
Jaw quick-change system adapter		
BSWS-AR 64	0300092	
BSWS-A 64	0303022	
Jaw quick-change system base		
BSWS-B 64	0303023	
Finger blanks with jaw quick-change system		
BSWS-ABR-PGZN-plus 64	0300072	
BSWS-SBR-PGZN-plus 64	0300082	
Jaw quick-change system reversed		
BSWS-UR 64	0302991	

ⓘ Only the systems listed in the table can be used.

ZBA L-plus 64 intermediate jaws

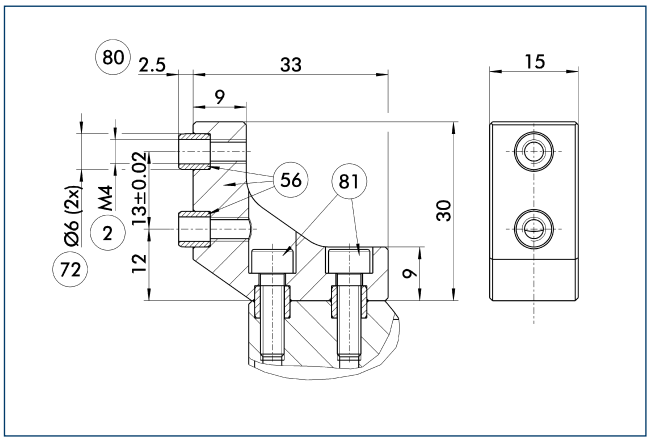

(2) Finger connection
(56) Included in delivery
(72) Fit for centering sleeves
(80) Depth of the centering sleeve hole in the mating part
(81) Not included in the scope of delivery

Optionally intermediate jaws can be used, enabling direct connection and alignment of top jaws and various standard accessories in Z-direction.

Description	ID	Material	Scope of delivery
Intermediate jaws			
ZBA-L-plus 64	0311722	Aluminum	1

UZB 64 universal intermediate jaw

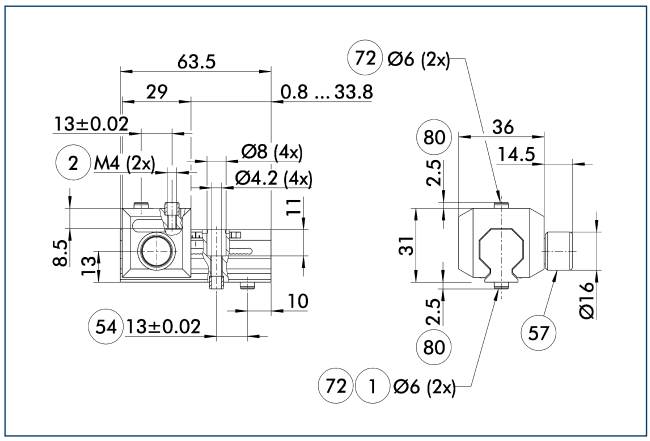

1 Gripper connection
2 Finger connection
54 Optional right or left connection
57 Locking
72 Fit for centering sleeves
80 Depth of the centering sleeve hole in the mating part

The universal intermediate jaw allows fast tool-free and reliable plugging and shifting of top jaws at the gripper.

Description	ID	Grid dimension [mm]
Universal intermediate jaw		
UZB 64	0300042	1.5
Finger blanks		
ABR-PGZN-plus 64	0300010	
SBR-PGZN-plus 64	0300020	

FMS-ZBA / ZBP 64 force-measuring jaws

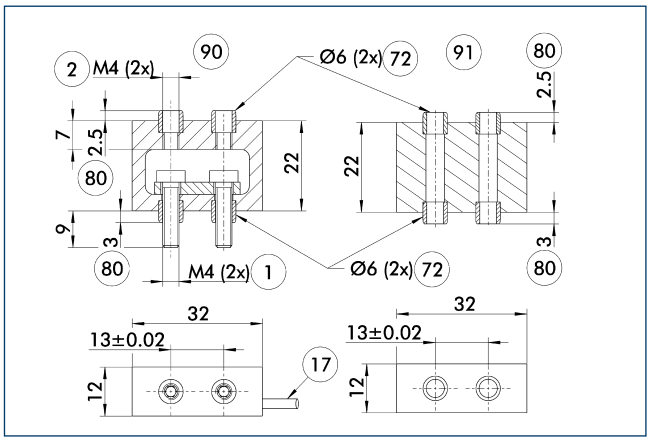

1 Gripper connection
2 Finger connection
17 Cable outlet
72 Fit for centering sleeves
80 Depth of the centering sleeve hole in the mating part
90 Active intermediate jaws
91 Passive intermediate jaws

Force measuring jaws measure gripping forces, but can also determine workpiece weights or dimensional deviations. There are active and passive intermediate jaws (FMS-ZBA or FMS-ZBP). At least one active force measuring jaw is required per gripper, the rest can be passive. For each active jaw, a FMS-A control unit and a FMS-AK connection cable are required.

Description	ID	Often combined
Active intermediate jaws		
FMS-ZBA 64	0301832	
Passive intermediate jaws		
FMS-ZBP 64	0301833	
Connection cables		
FMS-AK0200	0301820	●
FMS-AK0500	0301821	
FMS-AK1000	0301822	
FMS-AK2000	0301823	
Electronic processor		
FMS-A1	0301810	

ABR- / SBR-PGZN-plus 64 finger blanks

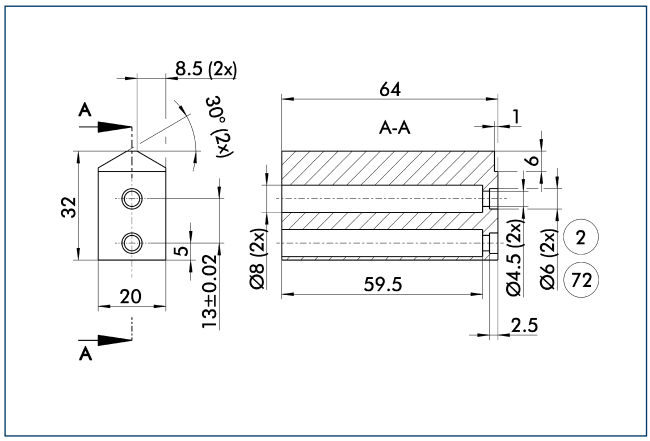

(2) Finger connection (72) Fit for centering sleeves

Finger blanks for customized subsequent machining.

Description	ID	Material	Scope of delivery
Finger blanks			
ABR-PGZN-plus 64	0300010	Aluminum	1
SBR-PGZN-plus 64	0300020	16MnCr5	1

OAS-PGN-plus 64 object distance sensor

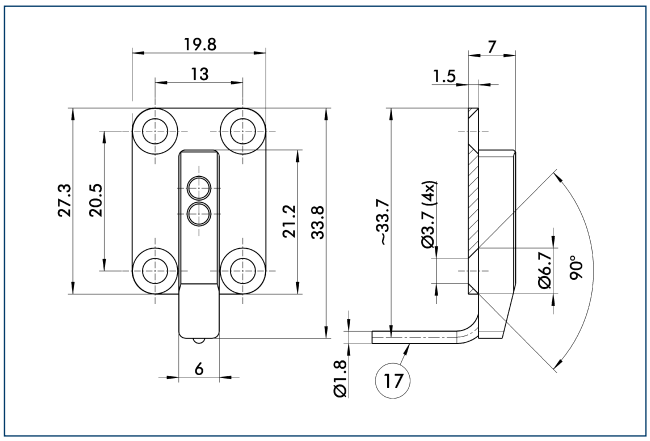

(17) Cable outlet

Description	ID	
Object distance sensor		
OAS-PGN-plus 64	0308877	

Object distance sensor

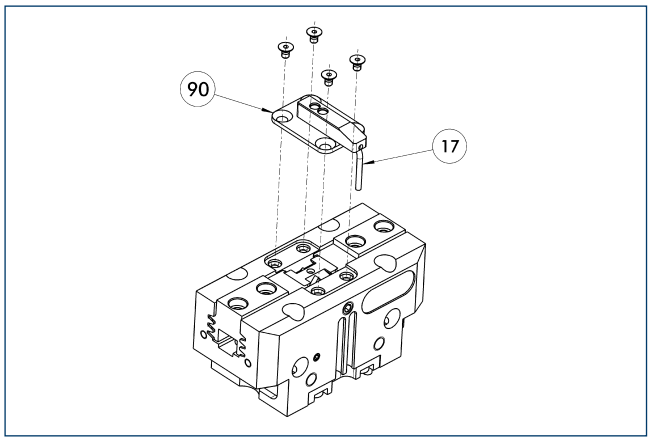

(17) Cable outlet (90) OAS

Optical distance and presence sensor for direct mounting on the gripper. One OAS sensor per gripper can be assembled.

Description	ID	
Object distance sensor		
OAS-PGN-plus 64	0308877	
Electronic processor		
OAS-V09-D	0308865	
OAS-V10-A	0308867	
OAS-V10-D	0308866	

ⓘ The evaluation of the OAS can be done with either an analog or digital evaluation unit and with or without a display. The states which should be detected can be simply taught.

Attachment valves

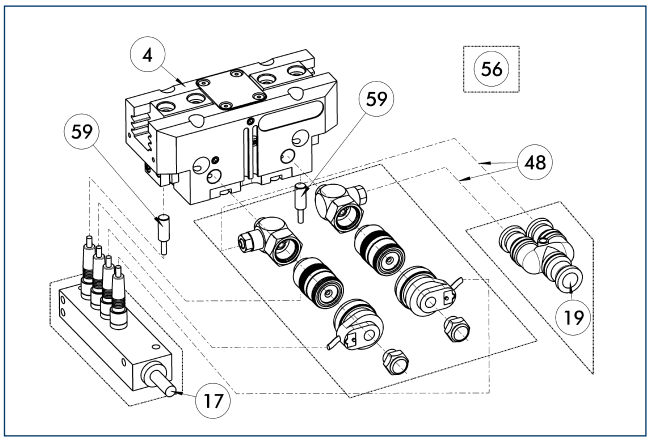

(4) Gripper (48) Hose
(17) Cable outlet (56) Included in delivery
(19) Air connection (59) Monitoring gripping

For each unit one attachment valve ABV is required, optional with distributor for sensors and valves. Attachment valves increase the efficiency, reduce the installation work and air consumption and simplify air supply. For details please refer to the "Accessories" catalog section.

Description	ID	Often combined
Attachment valves		
ABV-MV15-M5	0303323	
ABV-MV15-M5-V2-M8	0303386	
ABV-MV15-M5-V4-M8	0303356	●
ABV-MV15-M5-V8-M8	0303357	

Modular assembly automation

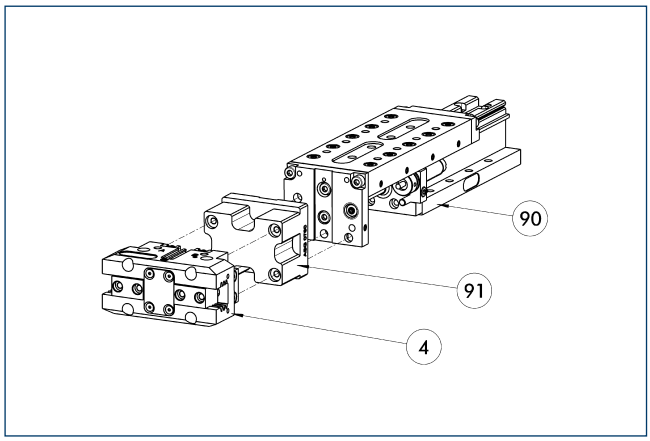

(4) Gripper
(90) CLM / KLM / LM / ELM / ELS / HLM linear module
(91) ASG adapter plate

Gripper and linear modules can be combined with standard adapters out of the modular assembly system. For more information see our catalog "Modular Assembly Automation".

VB-PGN-plus 64 valve box

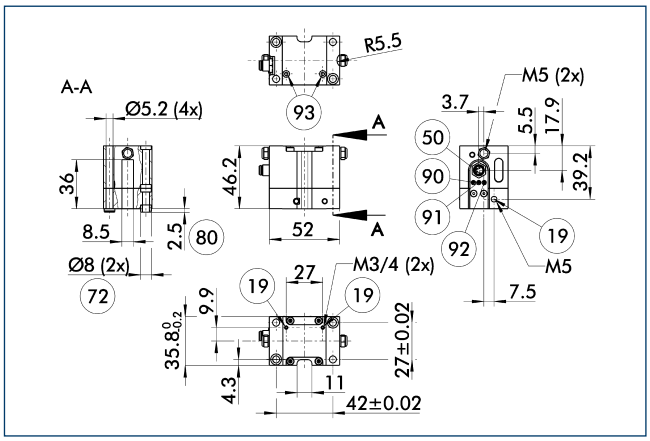

(19) Air connection
(50) Electrical connection
(72) Fit for centering sleeves
(80) Depth of the centering sleeve hole in the mating part
(90) Power supply
(91) Valve switched b for gripper opened
(92) Valve switched a for gripper opened
(93) Valve switched a and b

Description	ID	
Valve box		
VB-PGN-plus 64	0310092	

Valve box

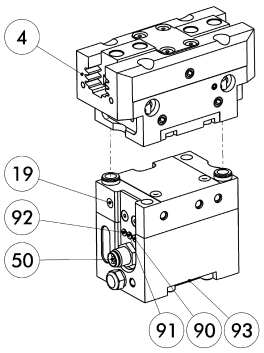

(4) Gripper
(19) Air connection
(50) Electrical connection
(90) Power supply
(91) Valve switched b for gripper opened
(92) Valve switched a for gripper opened
(93) Direct connection for hose-free compressed air supply

Ready to install, local control solution! Valves are attached directly to the handling component. As a result, cycle times are significantly reduced and the number of hoses, commissioning times, and air consumption are minimised while maximum process safety is assured.

Description	ID	Often combined
Valve box		
VB-PGN-plus 64	0310092	
Connection cables		
KA BG08-L 4P-0500	0307767	●
KA BG08-L 4P-1000	0307768	
KA BW08-L 4P-0500	0307765	
KA BW08-L 4P-1000	0307766	
Sensor distributor		
V2-M8-4P-2XM8-3P	0301380	
Clip for plug / socket		
CLI-M8	0301463	

ⓘ Valve and sensor signals of the unit can be merged on a bus distributor so that the electrical as well as the pneumatic connections can be decentralized.

Inductive proximity switches

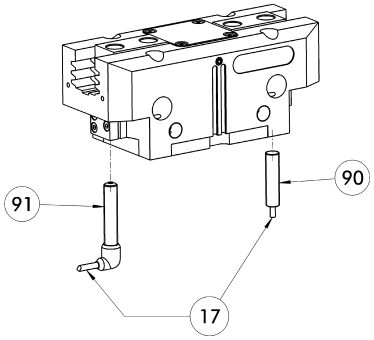

(17) Cable outlet
(90) IN ... sensor
(91) IN ...-SA sensor

Directly mounted limit position monitor.

Description	ID	Often combined
Inductive proximity switches		
IN 80-S-M12	0301578	
IN 80-S-M8	0301478	●
INK 80-S	0301550	
Inductive proximity switches with lateral outlet		
IN 80-S-M12-SA	0301587	
IN 80-S-M8-SA	0301483	●
INK 80-S-SA	0301566	
Cable extensions		
KV BG12-SG12 3P-0030-PNP	0301999	
KV BG12-SG12 3P-0060-PNP	0301998	
KV BW08-SG08 3P-0030-PNP	0301495	
KV BW08-SG08 3P-0100-PNP	0301496	
KV BW08-SG08 3P-0200-PNP	0301497	●
KV BW12-SG12 3P-0030-PNP	0301595	
KV BW12-SG12 3P-0100-PNP	0301596	
KV BW12-SG12 3P-0200-PNP	0301597	
Clip for plug / socket		
CLI-M12	0301464	
CLI-M8	0301463	
Connection cables		
KA BG08-L 3P-0300-PNP	0301622	●
KA BG08-L 3P-0500-PNP	0301623	
KA BG12-L 3P-0500-PNP	30016369	
KA BW08-L 3P-0300-PNP	0301594	
KA BW08-L 3P-0500-PNP	0301502	
KA BW12-L 3P-0300-PNP	0301503	
KA BW12-L 3P-0500-PNP	0301507	
Sensor distributor		
V2-M8	0301775	●
V2-M12	0301776	●
V4-M12	0301747	
V4-M8	0301746	

ⓘ Two sensors (closer/S) are required for each unit, plus extension cables as an option. Please note the minimum permitted bending radii for the sensor cables, which are generally 35 mm.

Flexible position sensor

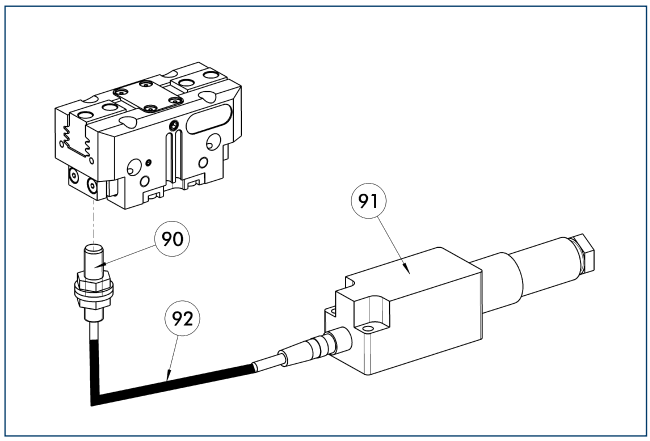

(90) FPS-S sensor
(91) FPS-F5 / -F5 T electronic processor
(92) Cable extensions

Flexible position monitoring of up to five positions.

Description	ID	Often combined
Mounting kit for FPS		
AS-FPS-PGZN-plus 64-1/80-2	0301630	
Electronic processor		
FPS-F5	0301805	●
FPS-F5 T	0301807	
Sensor		
FPS-S M8	0301704	
Clip for plug / socket		
CLI-M8	0301463	

ⓘ When using a FPS system, a FPS sensor (FPS-S) and a control unit (FPS-F5 / F5 T) are required for each gripper as well as a mounting kit (AS), if listed. Cable extensions (KV) are available as options in the "Accessories" catalog section.

MMS electronic magnetic switches

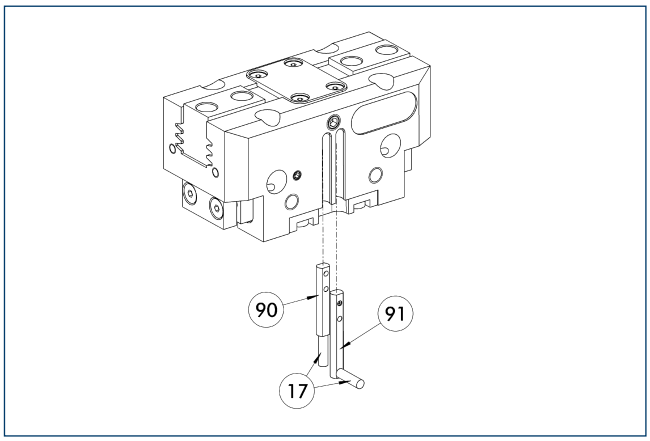

(17) Cable outlet
(90) MMS 22... sensor
(91) MMS 22...-SA sensor

End position monitoring for mounting in the C-slot.

Description	ID	Often combined
Electronic magnetic dwitches MMS		
MMS 22-S-M8-PNP	0301032	●
MMSK 22-S-PNP	0301034	
MMS electronic magnetic switches with lateral cable outlet		
MMS 22-S-M8-PNP-SA	0301042	●
MMSK 22-S-PNP-SA	0301044	
Cable extensions		
KV BW08-SG08 3P-0030-PNP	0301495	
KV BW08-SG08 3P-0100-PNP	0301496	
KV BW08-SG08 3P-0200-PNP	0301497	●
Clip for plug / socket		
CLI-M8	0301463	
Connection cables		
KA BG08-L 3P-0300-PNP	0301622	●
KA BG08-L 3P-0500-PNP	0301623	
KA BW08-L 3P-0300-PNP	0301594	
KA BW08-L 3P-0500-PNP	0301502	
Sensor distributor		
V2-M8	0301775	●
V4-M8	0301746	
V8-M8	0301751	

ⓘ Two sensors (closer/S) are required for each unit, plus extension cables as an option. Please note the minimum permitted bending radii for the sensor cables, which are generally 35 mm.

MMS PI1 programmable magnetic switches

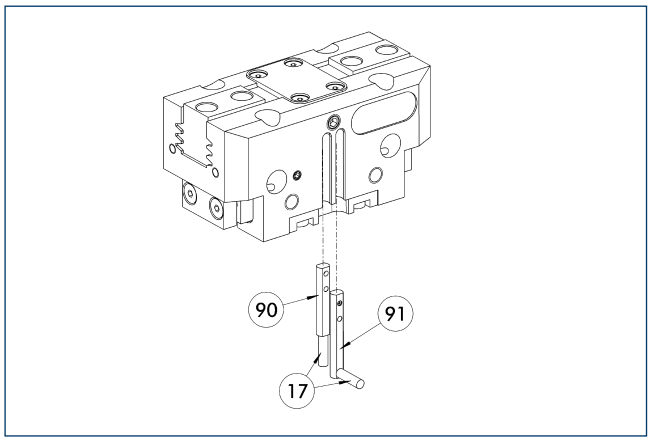

(17) Cable outlet
(91) MMS 22...-PI1-...-SA sensor
(90) MMS 22...-PI1-... sensor

Position query with one programmable position per sensor and electronics integrated in sensor. Programmable via MT magnet teaching tool (included in the scope of delivery) or ST plug teaching tool (optional). Limit position query mounted in C-groove. If the ST plug teaching tools are listed in the table, teaching can only take place with the ST plug teaching tools.

Description	ID	Often combined
MMS PI1 programmable magnetic switches		
MMS 22-PI1-S-M8-PNP	0301160	●
MMSK 22-PI1-S-PNP	0301162	
MMS PI1-HD programmable magnetic switches with stainless steel housing		
MMS 22-PI1-S-M8-PNP-HD	0301110	●
MMSK 22-PI1-S-PNP-HD	0301112	
MMS PI1 programmable magnetic switches with lateral cable outlet		
MMS 22-PI1-S-M8-PNP-SA	0301166	●
MMSK 22-PI1-S-PNP-SA	0301168	

ⓘ Two sensors (closer/S) are required for each unit, plus extension cables as an option. Please note the minimum permitted bending radii for the sensor cables, which are generally 35 mm. Connection cable, cable extensions, and sensor distributors can be found in the table for the MMS 22.

MMS PI2 programmable magnetic switches

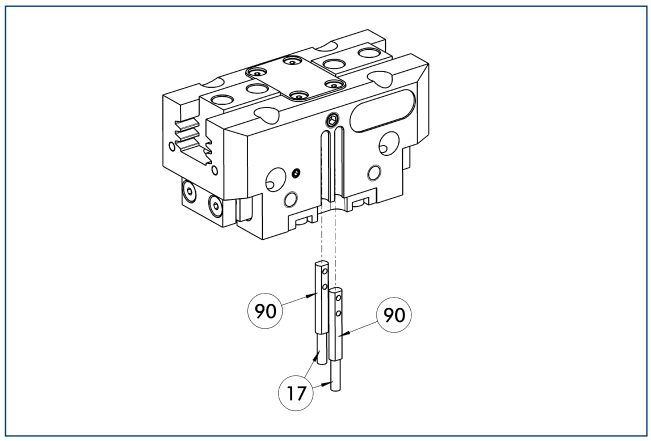

(17) Cable outlet
(90) MMS 22...-PI2-... sensor

Position query with two programmable positions per sensor and electronics integrated in sensor. Programmable via MT magnet teaching tool (included in the scope of delivery) or ST plug teaching tool (optional). Limit position query mounted in C-groove. If the ST plug teaching tools are listed in the table, teaching can only take place with the ST plug teaching tools.

Description	ID	Often combined
MMS PI2 programmable magnetic switches		
MMS 22-PI2-S-M8-PNP	0301180	●
MMSK 22-PI2-S-PNP	0301182	
MMS PI2-HD programmable magnetic switches with stainless steel housing		
MMS 22-PI2-S-M8-PNP-HD	0301130	●
MMSK 22-PI2-S-PNP-HD	0301132	

ⓘ Per unit one sensor (closer/S) is required, optionally a cable extension. Please note the minimum permitted bending radii for the sensor cables, which are generally 35 mm. Connection cable, cable extensions, and sensor distributors can be found in the table for the MMS-P 22.

MMS-P programmable magnetic switches

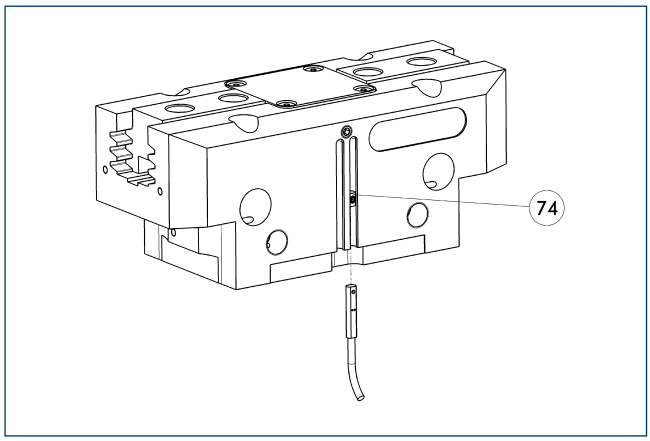

74 Stop for MMS-P

Position monitoring with two programmable positions per sensor. The end position monitoring is mounted in the C-slot.

Description	ID	Often combined
MMS-P programmable magnetic switches		
MMSK-P 22-S-PNP	0301371	
MMS-P 22-S-M8-PNP	0301370	●
Clip for plug / socket		
CLI-M8	0301463	
Connection cables		
KA BG08-L 4P-0500	0307767	●
KA BG08-L 4P-1000	0307768	
KA BW08-L 4P-0500	0307765	
KA BW08-L 4P-1000	0307766	
Sensor distributor		
V2-M8-4P-2XM8-3P	0301380	

ⓘ Per unit one sensor (closer/S) is required, optionally a cable extension. Please note the minimum permitted bending radii for the sensor cables, which are generally 35 mm.

APS-Z80 analog position sensor

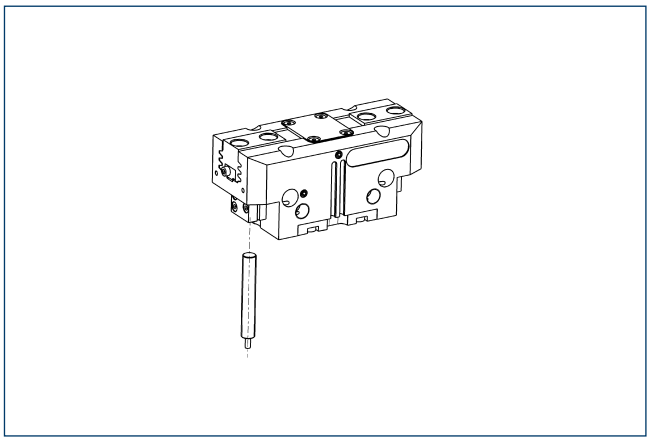

Contactlessly measuring, analog multi-position monitoring for any number of positions.

Description	ID	Often combined
Mounting kit for APS-Z80		
AS-APS-Z80-PGZN-plus 64-1	0302105	
AS-APS-Z80-PGZN-plus 64-2	0302106	
Sensor		
APS-Z80-K	0302072	
APS-Z80-M8	0302070	●

ⓘ When using an APS system, one mounting kit (AS-APS-Z80) and one APS-Z80 sensor is required per gripper.

MMS-A analog position sensor

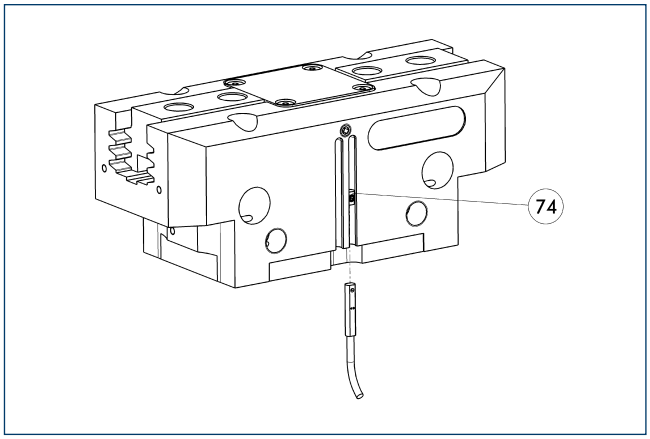

74 Stop for MMS-P

Contactlessly measuring, analog multi-position monitoring for any number of positions.

Description	ID	
Analog position sensor		
MMS 22-A-05V-M08	0315800	
MMS 22-A-10V-M08	0315820	

ⓘ One sensor is needed for each gripper. No additional mounting kit is needed – the standard gripper is equipped for use of the MMS-A.

APS-M1 analog position sensor

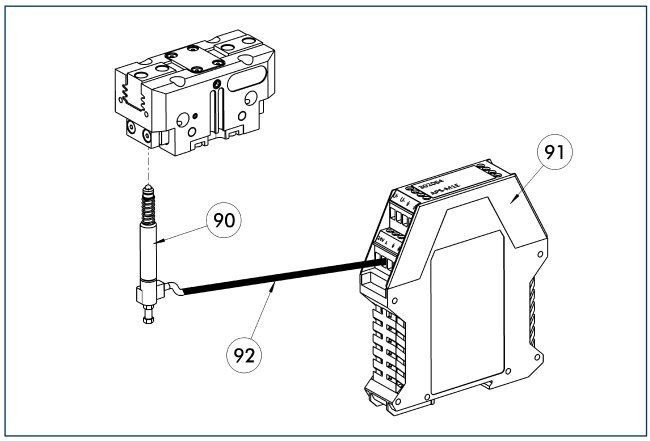

(90) APS-M1S sensor
(91) APS-M1E electronic processor
(92) APS-K extension cable

Analog multi position monitoring for any desired positions.

Description	ID	Often combined
Mounting kit for APS-M1		
AS-APS-M1-PGZN-plus 64-1	0302075	
AS-APS-M1-PGZN-plus 64-2	0302076	
Connection cables		
APS-K0200	0302066	●
APS-K0700	0302068	
Electronic processor		
APS-M1E	0302064	
Sensor		
APS-M1S	0302062	

ⓘ When using an APS system, for each gripper a mounting kit (AS-APS-M1), an APS-M1S sensor (incl. 3 m cable) as well as an electronics (APS-M1e) are required. An extension cable (APS-K) can be connected between the sensor and the electronics as an option. The max. cable length between the sensor and the electronics is 10 m, between the electronics and their control unit (PLC) it is max. 1 m.

Cylindrical reed switches

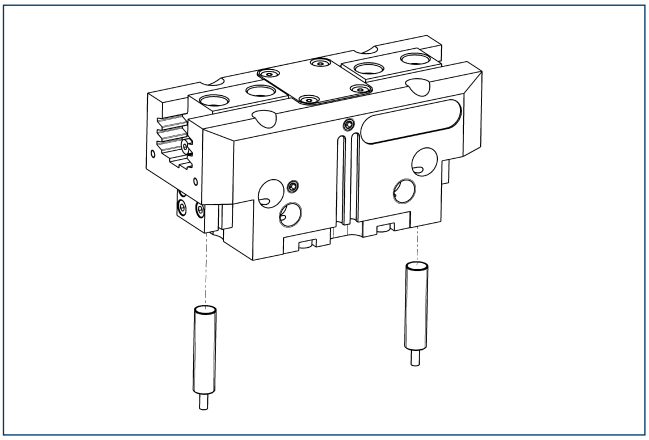

Limit position monitor can be mounted with mounting kit.

Description	ID	
Mounting kit for proximity switch		
AS-RMS 80 PGN/PZN-plus 64/80	0377725	
Reed switches		
RMS 80-S-M8	0377721	

ⓘ Two sensors (closer/S) are required for each unit, plus extension cables as an option. This mounting kit needs to be ordered optionally as an accessory. Two mounting kits are required per gripper. Please note the minimum permitted bending radii for the sensor cables, which are generally 35 mm.

PGN-plus 80

SCHUNK Grippers pneumatic | 2-Finger Parallel Grippers | Universal Gripper

Gripping force, O.D. gripping

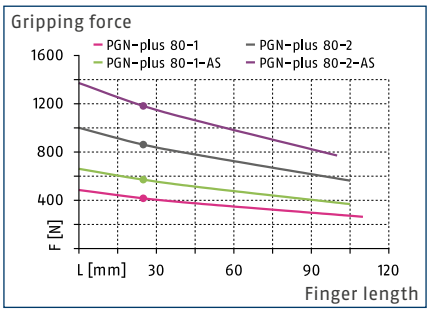

Gripping force, I.D. gripping

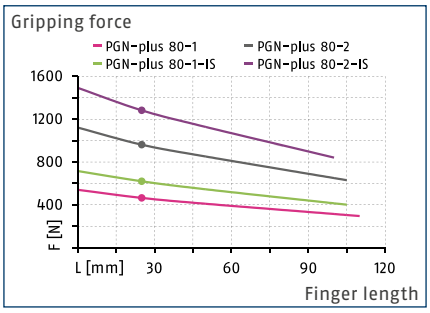

Finger load

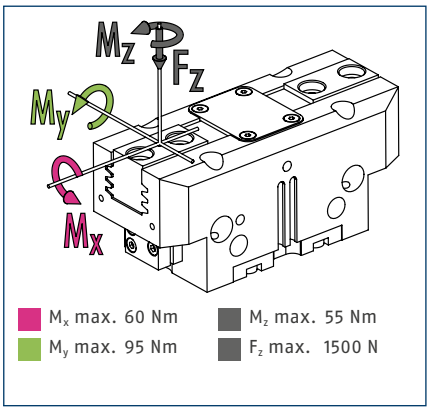

ⓘ The indicated moments and forces are static values, apply per base jaw and may occur simultaneously. M_y may arise in addition to the moment generated by the gripping force itself. If the max. permitted finger weight is exceeded, it is impreative to throttle the air supply so that the jaw movement occurs without any hitting or bouncing. Service life may be reduced.

Technical data

Description		PGN-plus 80-1	PGN-plus 80-2	PGN-plus 80-1-AS	PGN-plus 80-2-AS	PGN-plus 80-1-IS	PGN-plus 80-2-IS
ID		0371101	0371151	0371401	0371451	0371461	0371471
Stroke per jaw	[mm]	8	4	8	4	8	4
Closing- / opening force	[N]	415/465	860/960	570/-	1180/-	-/620	-/1280
min. spring force	[N]			155	320	155	320
Weight	[kg]	0.5	0.5	0.6	0.6	0.6	0.6
Recommended workpiece weight	[kg]	2.1	4.3	2.1	4.3	2.1	4.3
Fluid consumption per double stroke	[cm³]	22.5	22.5	36	36	42.5	42.5
min. / max. operating pressure	[bar]	2.5/8	2.5/8	4/6.5	4/6.5	4/6.5	4/6.5
Nominal operating pressure	[bar]	6	6	6	6	6	6
Closing- / opening time	[s]	0.04/0.04	0.04/0.04	0.03/0.05	0.03/0.05	0.05/0.03	0.05/0.03
Closing- / opening time only with spring	[s]			0.10	0.10	0.10	0.10
max. permitted finger length	[mm]	110	105	105	100	105	100
max. permitted weight per finger	[kg]	0.6	0.6	0.6	0.6	0.6	0.6
IP class		40	40	40	40	40	40
min. / max. ambient temperature	[°C]	5/90	5/90	5/90	5/90	5/90	5/90
Repeat accuracy	[mm]	0.01	0.01	0.01	0.01	0.01	0.01
Cleanroom class ISO 14644-1		5	5	5	5	5	5
Options and their characteristics							
Dust-tight version		37371101	37371151	37371401	37371451	37371461	37371471
IP class		64	64	64	64	64	64
Weight	[kg]	0.6	0.6	0.7	0.7	0.7	0.7
Anti-corrosion version		38371101	38371151	38371401	38371451	38371461	38371471
High-temperature version		39371101	39371151	39371401	39371451	39371461	39371471
min. / max. ambient temperature	[°C]	5/130	5/130	5/130	5/130	5/130	5/130
Force intensified version		0372101	0372151	0372401		0372461	
Closing- / opening force	[N]	745/835	1550/1730	900/-		-/990	
Weight	[kg]	0.65	0.65	0.75		0.75	
Maximum pressure	[bar]	6	6	6		6	
max. permitted finger length	[mm]	100	80	80		80	
Precision version		0371123	0371173	0371423	0371438		

ⓘ The full gripping force according to the data table is only realised after around 100 gripping cycles.

Main view

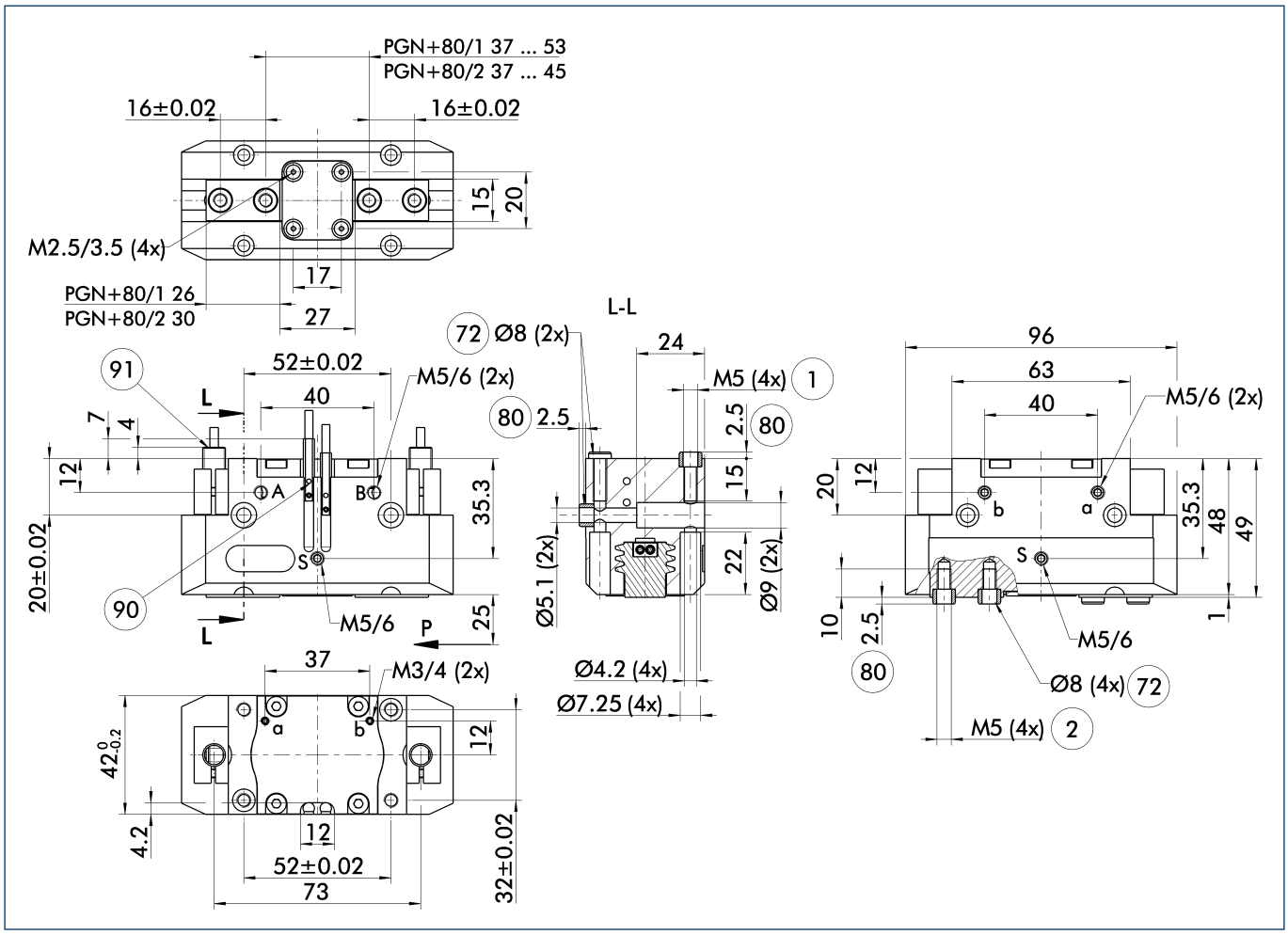

The drawing shows the gripper in the basic version with closed jaws, without dimensional consideration of the options described below.

ⓘ The SDV-P pressure maintenance valve can also be used for I.D. or O.D. gripping alternatively or in addition to the spring-loaded, mechanical gripping force maintenance device (see catalog section on "Accessories").

A, a Main / direct connection, gripper opening

B, b Main / direct connection, gripper closing

S Air purge connection (0.5 ... 1 bar)

(1) Gripper connection

(2) Finger connection

(72) Fit for centering sleeves

(80) Depth of the centering sleeve hole in the mating part

(90) MMS 22... sensor

(91) IN ... sensor

Maximum permitted finger projection

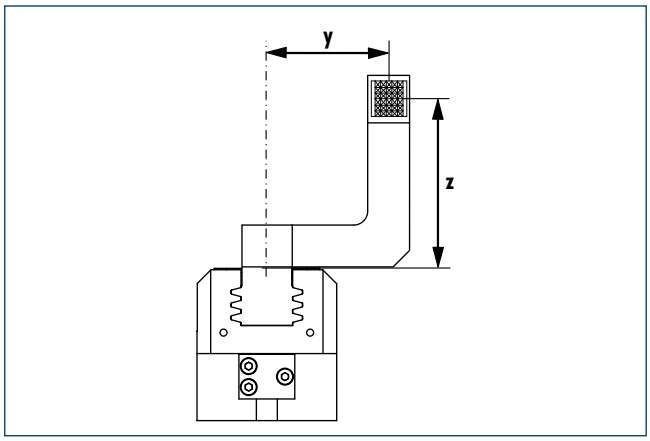

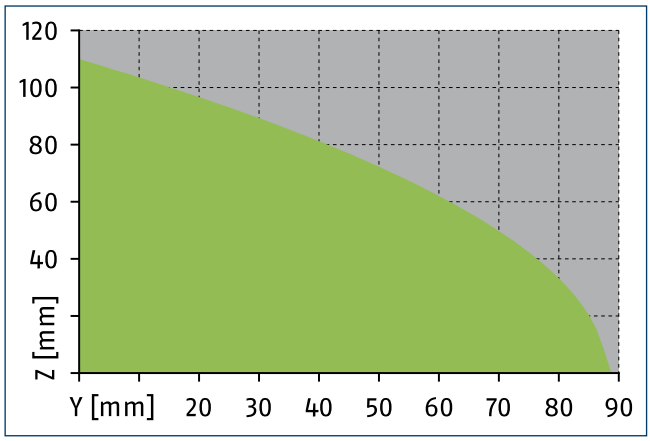

Permitted range

Inadmissible range

The curve applies for the base version (Stroke -1). For other versions, the curve must be offset in parallel corresponding to the max. permissible finger length.

Hose-free direct connection M3

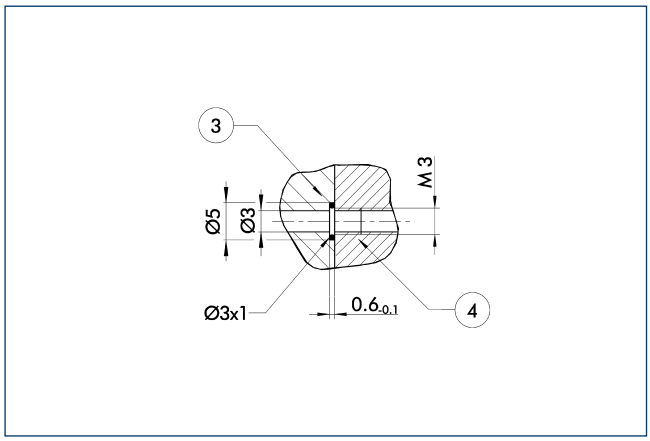

3 Adapter

4 Gripper

The direct connection is used for supplying compressed air without hoses. Instead, the pressure medium is fed through bore-holes in the mounting plate.

Gripping force maintenance device AS / IS

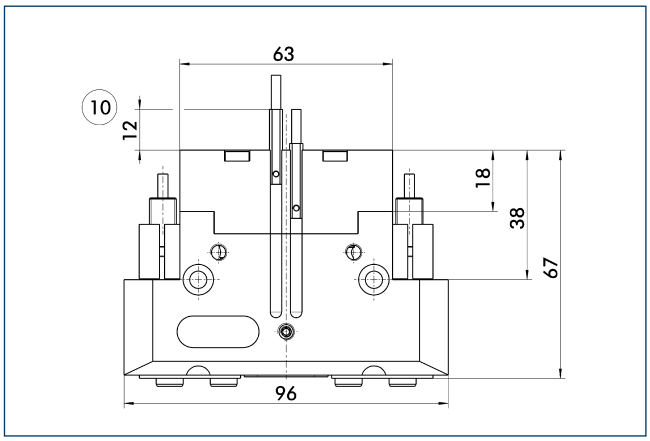

10 Projection applies only for AS version

The mechanical maintenance of gripping force also assures a minimum gripping force in the case of a loss of pressure. With the AS / S variant, this acts as a closing force, and as an opening force for the IS variant. The maintenance of gripping force element can also be used as a means for increasing gripping force or for single actuated gripping.

Dust-tight version

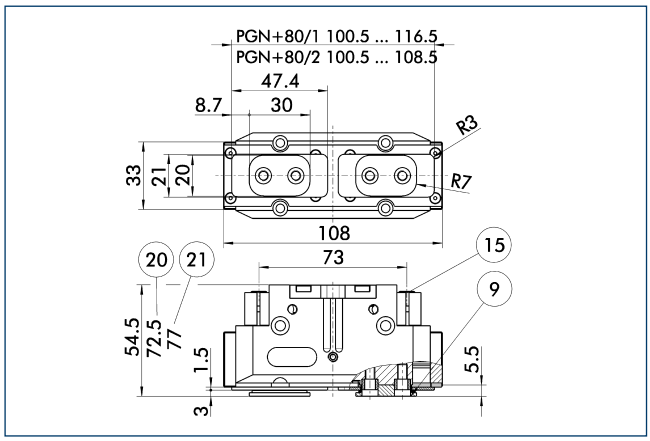

(9) For mounting screw connection diagram, see basic version
(15) Sealing bolt
(20) For AS / IS version
(21) For KVZ version

The "dust-protection option" increases the degree of protection against penetrating substances. The screw connection diagram shifts by the height of the intermediate jaw. The finger length is still measured from the upper edge of the gripper housing.

Force intensified version

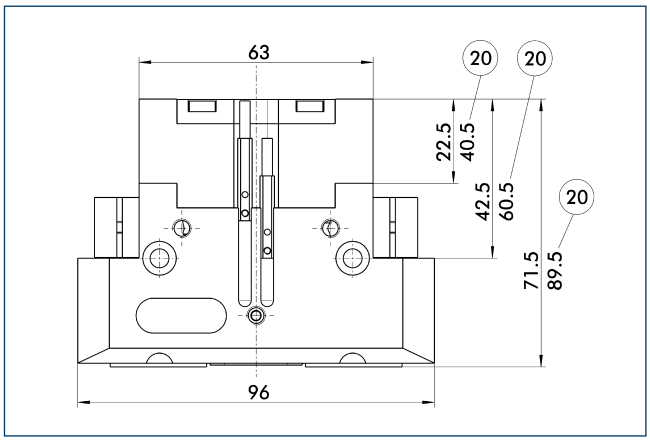

(20) For AS / IS version

The KVZ power booster cylinder increases gripping forces for opening and closing. A second piston connected in a series increases the force on the diagonal pull for this purpose. If applicable, observe the additional installation height for combination with an element for maintenance of gripping force.

Precision version

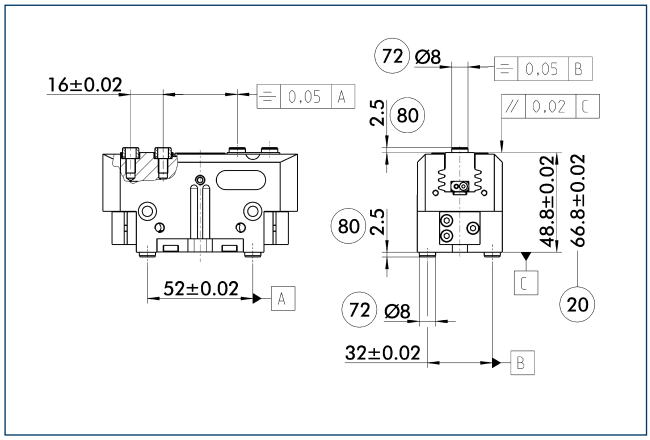

(20) For AS / IS version
(72) Fit for centering sleeves
(80) Depth of the centering sleeve hole in the mating part

The indicated tolerances just refer to the types of precision versions shown in the chart of technical specifications. All other types of precision versions are available on request.

SDV-P pressure maintenance valve

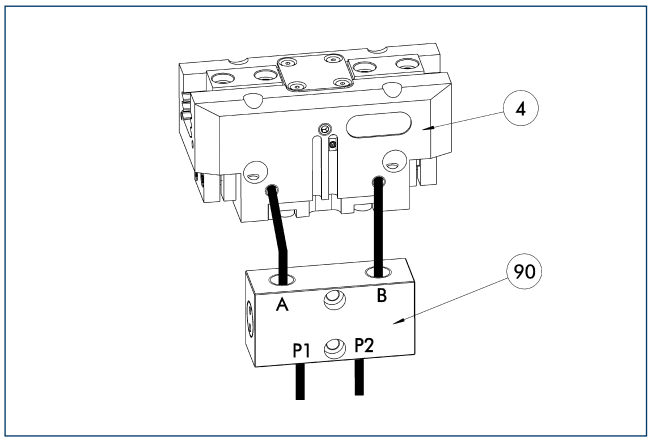

(4) Gripper

(90) SDV-P pressure maintenance valve

The SDV-P pressure maintenance valves ensure that the pressure in the piston chamber of pneumatic gripping, rotary, linear, and quick-change modules is maintained temporarily during an emergency stop.

Description	ID	
Pressure maintenance valve		
SDV-P 04	0403130	

HUE PGN-plus 80 protective cover

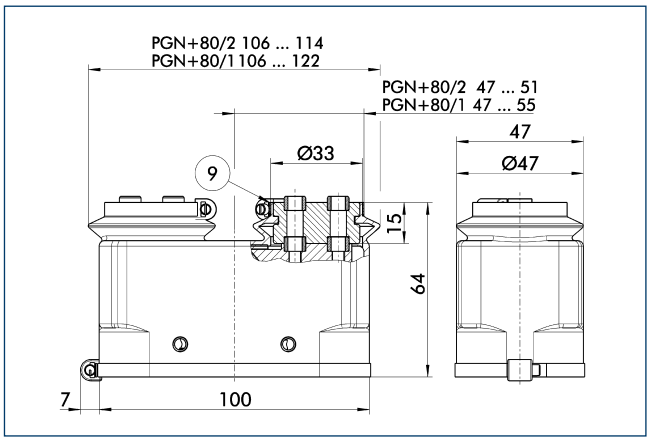

(9) For mounting screw connection diagram, see basic version

The HUE protective cover completely protects the gripper against external influences up to IP65 if an additional sealing of the cover bottom is provided as part of the application. The mounting diagram shifts by the height of the intermediate jaw.

Description	ID	Cleanroom class ISO 14644-1	IP class
Protection cover			
HUE PGN-plus 80	0371481	2	65

BSWS jaw quick-change systems

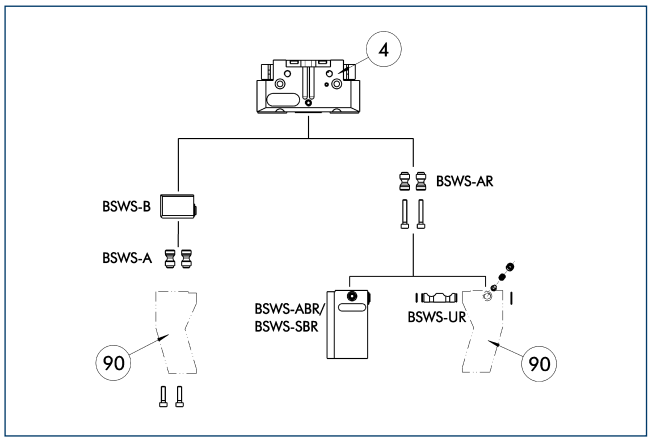

(4) Gripper
(90) Customized gripper fingers

There are various jaw quick-change systems available for the grippers. For detailed information, refer to the appropriate product.

Description	ID	
Jaw quick-change system adapter		
BSWS-AR 80	0300093	
BSWS-A 80	0303024	
Jaw quick-change system base		
BSWS-B 80	0303025	
Finger blanks with jaw quick-change system		
BSWS-ABR-PGZN-plus 80	0300073	
BSWS-SBR-PGZN-plus 80	0300083	
Jaw quick-change system reversed		
BSWS-UR 80	0302992	

ⓘ Only the systems listed in the table can be used.

ZBA L-plus 80 intermediate jaws

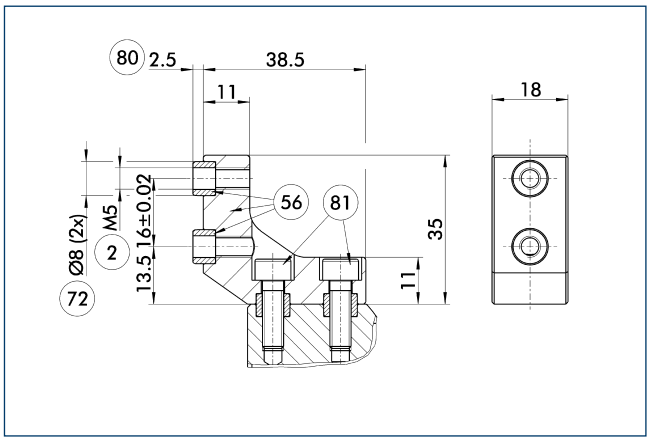

(2) Finger connection
(56) Included in delivery
(72) Fit for centering sleeves
(80) Depth of the centering sleeve hole in the mating part
(81) Not included in the scope of delivery

Optionally intermediate jaws can be used, enabling direct connection and alignment of top jaws and various standard accessories in Z-direction.

Description	ID	Material	Scope of delivery
Intermediate jaws			
ZBA-L-plus 80	0311732	Aluminum	1

UZB 80 universal intermediate jaw

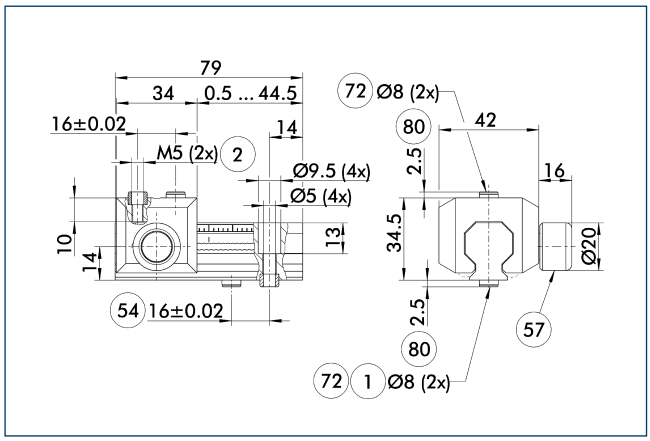

1 Gripper connection
2 Finger connection
54 Optional right or left connection
57 Locking
72 Fit for centering sleeves
80 Depth of the centering sleeve hole in the mating part

The universal intermediate jaw allows fast tool-free and reliable plugging and shifting of top jaws at the gripper.

Description	ID	Grid dimension [mm]
Universal intermediate jaw		
UZB 80	0300043	2
UZB-S 80	5518271	2
Finger blanks		
ABR-PGZN-plus 80	0300011	
SBR-PGZN-plus 80	0300021	

FMS-ZBA / ZBP 80 force-measuring jaws

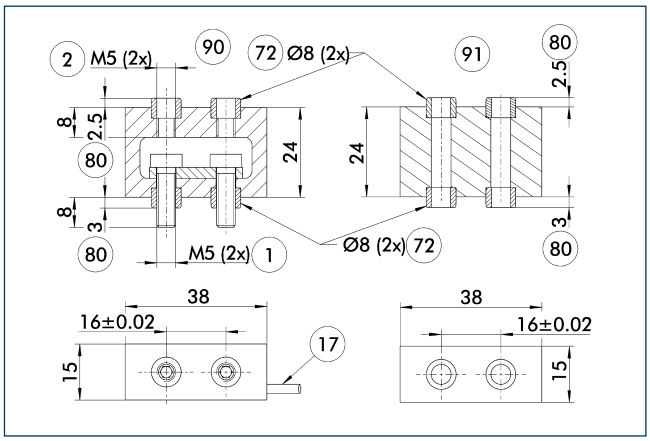

1 Gripper connection
2 Finger connection
17 Cable outlet
72 Fit for centering sleeves
80 Depth of the centering sleeve hole in the mating part
90 Active intermediate jaws
91 Passive intermediate jaws

Force measuring jaws measure gripping forces, but can also determine workpiece weights or dimensional deviations. There are active and passive intermediate jaws (FMS-ZBA or FMS-ZBP). At least one active force measuring jaw is required per gripper, the rest can be passive. For each active jaw, a FMS-A control unit and a FMS-AK connection cable are required.

Description	ID	Often combined
Active intermediate jaws		
FMS-ZBA 80	0301834	
Passive intermediate jaws		
FMS-ZBP 80	0301835	
Connection cables		
FMS-AK0200	0301820	●
FMS-AK0500	0301821	
FMS-AK1000	0301822	
FMS-AK2000	0301823	
Electronic processor		
FMS-A1	0301810	

ABR- / SBR-PGZN-plus 80 finger blanks

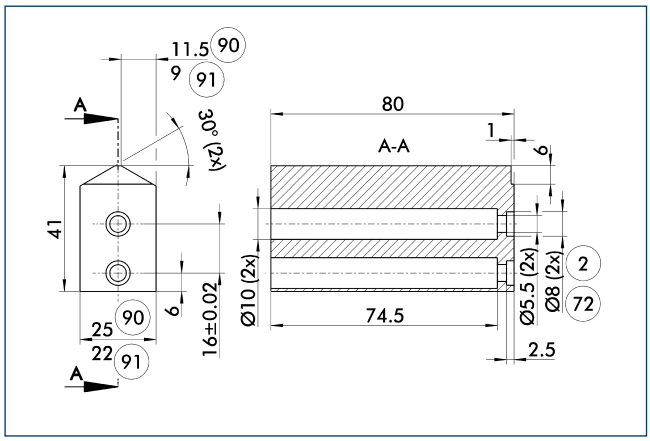

(2) Finger connection
(72) Fit for centering sleeves
(90) ABR-PGZN-plus
(91) SBR-PGZN-plus

Finger blanks for customized subsequent machining.

Description	ID	Material	Scope of delivery
Finger blanks			
ABR-PGZN-plus 80	0300011	Aluminum	1
SBR-PGZN-plus 80	0300021	16MnCr5	1

OAS-PGN-plus 80 object distance sensor

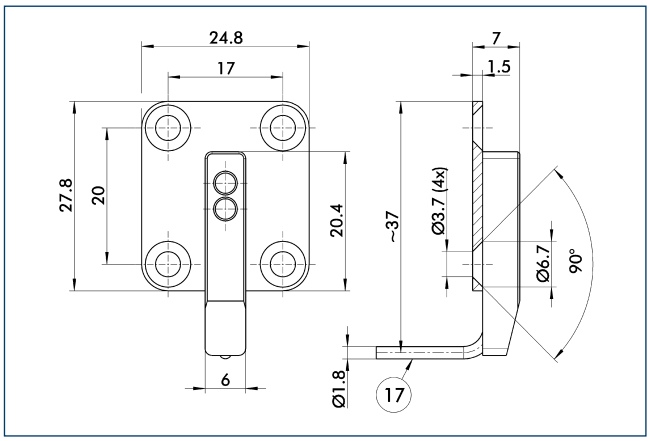

(17) Cable outlet

Description	ID	
Object distance sensor		
OAS-PGN-plus 80	0308878	

Object distance sensor

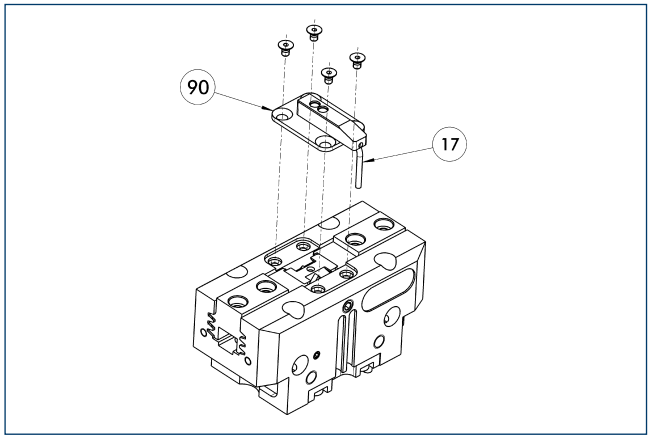

(17) Cable outlet
(90) OAS

Optical distance and presence sensor for direct mounting on the gripper. One OAS sensor per gripper can be assembled.

Description	ID	
Object distance sensor		
OAS-PGN-plus 80	0308878	
Electronic processor		
OAS-V09-D	0308865	
OAS-V10-A	0308867	
OAS-V10-D	0308866	

ⓘ The evaluation of the OAS can be done with either an analog or digital evaluation unit and with or without a display. The states which should be detected can be simply taught.

Attachment valves

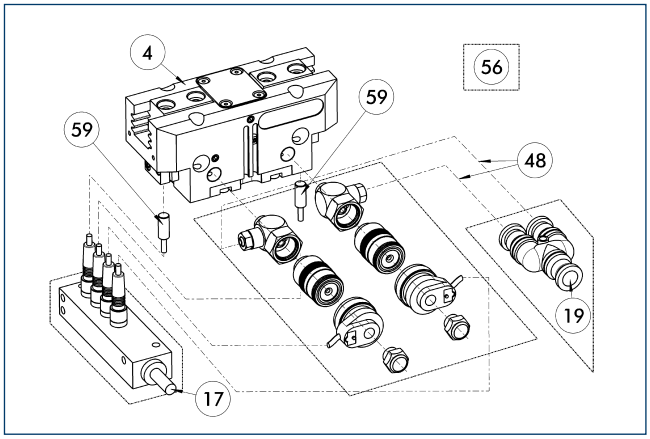

(4) Gripper
(17) Cable outlet
(19) Air connection
(48) Hose
(56) Included in delivery
(59) Monitoring gripping

For each unit one attachment valve ABV is required, optional with distributor for sensors and valves. Attachment valves increase the efficiency, reduce the installation work and air consumption and simplify air supply. For details please refer to the "Accessories" catalog section.

Description	ID	Often combined
Attachment valves		
ABV-MV25-M5	0303326	
ABV-MV25-M5-V2-M8	0303392	
ABV-MV25-M5-V4-M8	0303362	●
ABV-MV25-M5-V8-M8	0303363	

Modular assembly automation

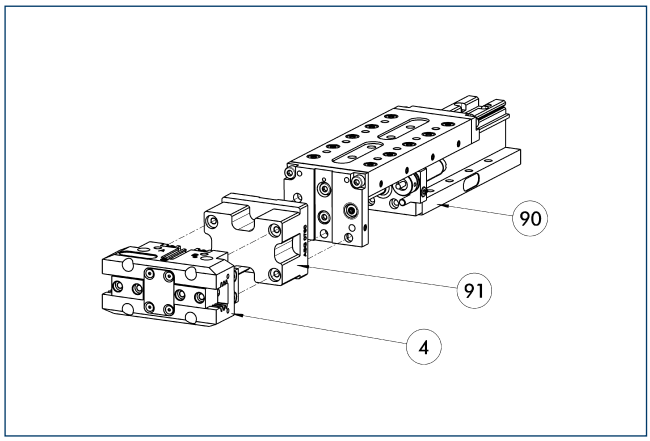

(4) Gripper
(91) ASG adapter plate
(90) CLM / KLM / LM / ELM / ELS / HLM linear module

Gripper and linear modules can be combined with standard adapters out of the modular assembly system. For more information see our catalog "Modular Assembly Automation".

Inductive proximity switches

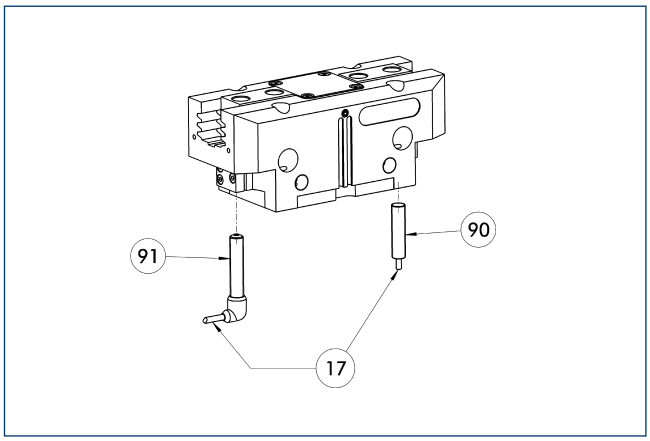

(17) Cable outlet
(91) IN ...-SA sensor
(90) IN ... sensor

Directly mounted limit position monitor.

Description	ID	Often combined
Inductive proximity switches		
IN 80-S-M12	0301578	
IN 80-S-M8	0301478	●
IN-C 80-S-M8	0301475	
INK 80-S	0301550	
Inductive proximity switches with lateral outlet		
IN 80-S-M12-SA	0301587	
IN 80-S-M8-SA	0301483	●
INK 80-S-SA	0301566	
Cable extensions		
KV BG12-SG12 3P-0030-PNP	0301999	
KV BG12-SG12 3P-0060-PNP	0301998	
KV BW08-SG08 3P-0030-PNP	0301495	
KV BW08-SG08 3P-0100-PNP	0301496	
KV BW08-SG08 3P-0200-PNP	0301497	●
KV BW12-SG12 3P-0030-PNP	0301595	
KV BW12-SG12 3P-0100-PNP	0301596	
KV BW12-SG12 3P-0200-PNP	0301597	
Clip for plug / socket		
CLI-M12	0301464	
CLI-M8	0301463	
Connection cables		
KA BG08-L 3P-0300-PNP	0301622	●
KA BG08-L 3P-0500-PNP	0301623	
KA BG12-L 3P-0500-PNP	30016369	
KA BW08-L 3P-0300-PNP	0301594	
KA BW08-L 3P-0500-PNP	0301502	
KA BW12-L 3P-0300-PNP	0301503	
KA BW12-L 3P-0500-PNP	0301507	
Sensor distributor		
V2-M8	0301775	●
V2-M12	0301776	●
V4-M12	0301747	

ⓘ Two sensors (closer/S) are required for each unit, plus extension cables as an option. Please note the minimum permitted bending radii for the sensor cables, which are generally 35 mm.

Flexible position sensor

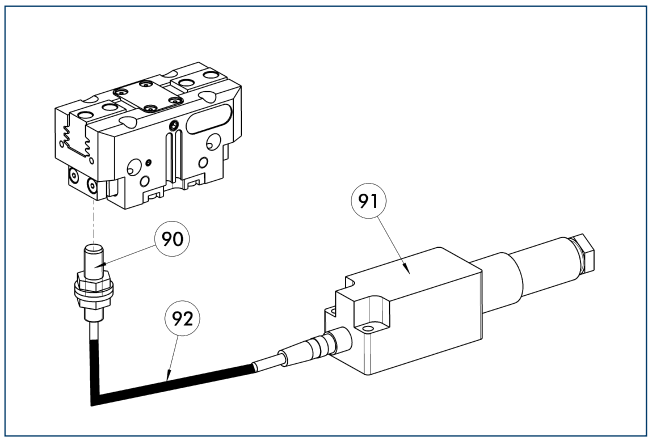

(90) FPS-S sensor
(91) FPS-F5 / -F5 T electronic processor
(92) Cable extensions

Flexible position monitoring of up to five positions.

Description	ID	Often combined
Mounting kit for FPS		
AS-FPS-PGZN-plus 64-1/80-2	0301630	
AS-FPS-PGZN-plus 80-1/PZB 80/PZB 100	0301632	
Electronic processor		
FPS-F5	0301805	●
FPS-F5 T	0301807	
Sensor		
FPS-S M8	0301704	
Clip for plug / socket		
CLI-M8	0301463	

ⓘ When using a FPS system, a FPS sensor (FPS-S) and a control unit (FPS-F5 / F5 T) are required for each gripper as well as a mounting kit (AS), if listed. Cable extensions (KV) are available as options in the "Accessories" catalog section.

MMS electronic magnetic switches

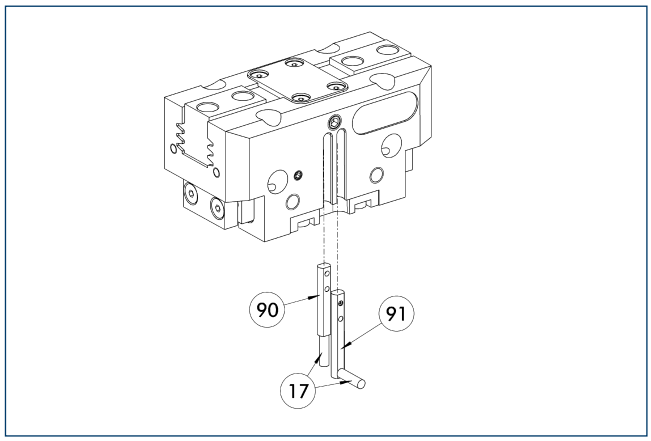

(17) Cable outlet
(90) MMS 22... sensor
(91) MMS 22...-SA sensor

End position monitoring for mounting in the C-slot.

Description	ID	Often combined
MMS electronic magnetic switches		
MMS 22-S-M8-PNP	0301032	●
MMSK 22-S-PNP	0301034	
MMS electronic magnetic switches with lateral cable outlet		
MMS 22-S-M8-PNP-SA	0301042	●
MMSK 22-S-PNP-SA	0301044	
Cable extensions		
KV BW08-SG08 3P-0030-PNP	0301495	
KV BW08-SG08 3P-0100-PNP	0301496	
KV BW08-SG08 3P-0200-PNP	0301497	●
Clip for plug / socket		
CLI-M8	0301463	
Connection cables		
KA BG08-L 3P-0300-PNP	0301622	●
KA BG08-L 3P-0500-PNP	0301623	
KA BW08-L 3P-0300-PNP	0301594	
KA BW08-L 3P-0500-PNP	0301502	
Sensor distributor		
V2-M8	0301775	●
V4-M8	0301746	
V8-M8	0301751	

ⓘ Two sensors (closer/S) are required for each unit, plus extension cables as an option. Please note the minimum permitted bending radii for the sensor cables, which are generally 35 mm.

MMS PI1 programmable magnetic switches

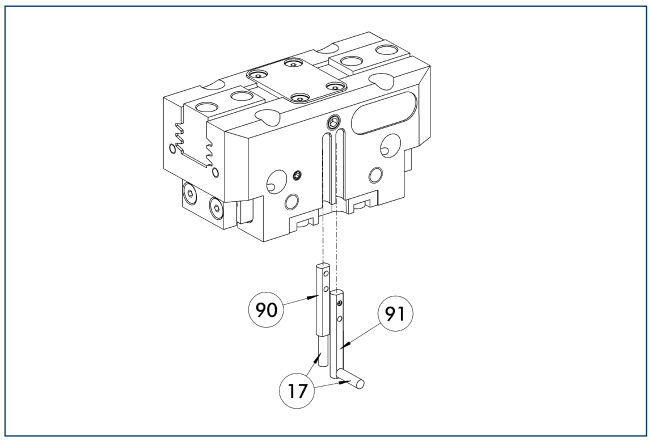

(17) Cable outlet
(91) MMS 22...-PI1-...-SA sensor
(90) MMS 22...-PI1-... sensor

Position query with one programmable position per sensor and electronics integrated in sensor. Programmable via MT magnet teaching tool (included in the scope of delivery) or ST plug teaching tool (optional). Limit position query mounted in C-groove. If the ST plug teaching tools are listed in the table, teaching can only take place with the ST plug teaching tools.

Description	ID	Often combined
MMS PI1 programmable magnetic switches		
MMS 22-PI1-S-M8-PNP	0301160	●
MMSK 22-PI1-S-PNP	0301162	
MMS PI1-HD programmable magnetic switches with stainless steel housing		
MMS 22-PI1-S-M8-PNP-HD	0301110	●
MMSK 22-PI1-S-PNP-HD	0301112	
MMS PI1 programmable magnetic switches with lateral cable outlet		
MMS 22-PI1-S-M8-PNP-SA	0301166	●
MMSK 22-PI1-S-PNP-SA	0301168	

ⓘ Two sensors (closer/S) are required for each unit, plus extension cables as an option. Please note the minimum permitted bending radii for the sensor cables, which are generally 35 mm. Connection cable, cable extensions, and sensor distributors can be found in the table for the MMS 22.

MMS PI2 programmable magnetic switches

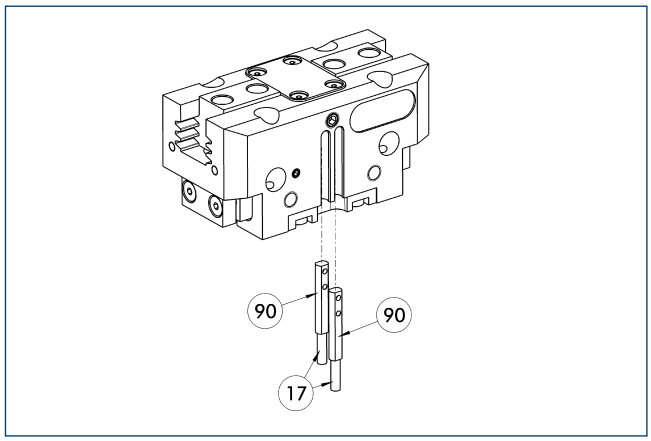

(17) Cable outlet
(90) MMS 22...-PI2-... sensor

Position query with two programmable positions per sensor and electronics integrated in sensor. Programmable via MT magnet teaching tool (included in the scope of delivery) or ST plug teaching tool (optional). Limit position query mounted in C-groove. If the ST plug teaching tools are listed in the table, teaching can only take place with the ST plug teaching tools.

Description	ID	Often combined
MMS PI2 programmable magnetic switches		
MMS 22-PI2-S-M8-PNP	0301180	●
MMSK 22-PI2-S-PNP	0301182	
MMS PI2-HD programmable magnetic switches with stainless steel housing		
MMS 22-PI2-S-M8-PNP-HD	0301130	●
MMSK 22-PI2-S-PNP-HD	0301132	

ⓘ Per unit one sensor (closer/S) is required, optionally a cable extension. Please note the minimum permitted bending radii for the sensor cables, which are generally 35 mm. Connection cable, cable extensions, and sensor distributors can be found in the table for the MMS-P 22.

MMS-P programmable magnetic switches

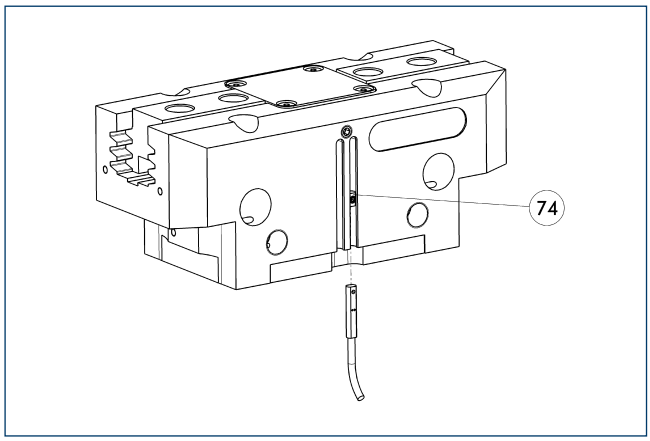

74 Stop for MMS-P

Position monitoring with two programmable positions per sensor. The end position monitoring is mounted in the C-slot.

Description	ID	Often combined
MMS-P programmable magnetic switches		
MMSK-P 22-S-PNP	0301371	
MMS-P 22-S-M8-PNP	0301370	●
Clip for plug / socket		
CLI-M8	0301463	
Connection cables		
KA BG08-L 4P-0500	0307767	●
KA BG08-L 4P-1000	0307768	
KA BW08-L 4P-0500	0307765	
KA BW08-L 4P-1000	0307766	
Sensor distributor		
V2-M8-4P-2XM8-3P	0301380	

ⓘ Per unit one sensor (closer/S) is required, optionally a cable extension. Please note the minimum permitted bending radii for the sensor cables, which are generally 35 mm.

APS-Z80 analog position sensor

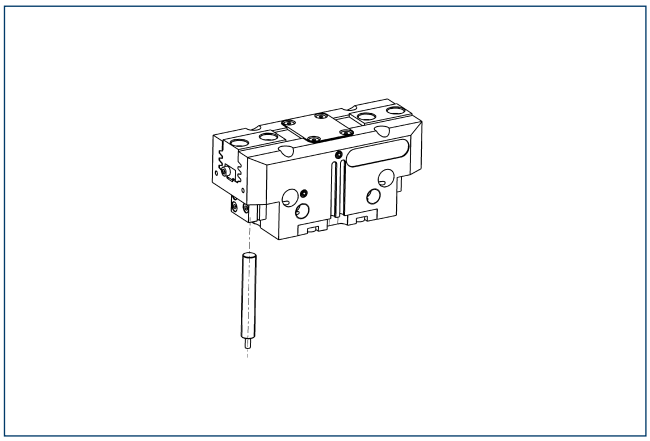

Contactlessly measuring, analog multi-position monitoring for any number of positions.

Description	ID	Often combined
Mounting kit for APS-Z80		
AS-APS-Z80-PGZN-plus 80-1	0302107	
AS-APS-Z80-PGZN-plus 80-2	0302108	
Sensor		
APS-Z80-K	0302072	
APS-Z80-M8	0302070	●

ⓘ When using an APS system, one mounting kit (AS-APS-Z80) and one APS-Z80 sensor is required per gripper.

MMS-A analog position sensor

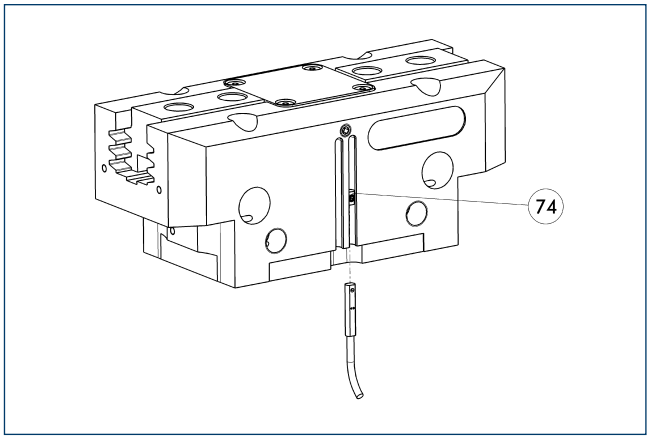

74 Stop for MMS-P

Contactlessly measuring, analog multi-position monitoring for any number of positions.

Description	ID	
Analog position sensor		
MMS 22-A-05V-M08	0315800	
MMS 22-A-10V-M08	0315820	

ⓘ One sensor is needed for each gripper. No additional mounting kit is needed – the standard gripper is equipped for use of the MMS-A.

APS-M1 analog position sensor

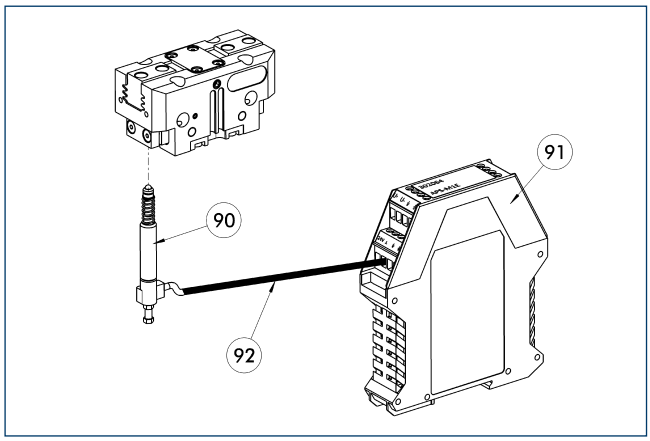

90 APS-M1S sensor
91 APS-M1E electronic processor
92 APS-K extension cable

Analog multi position monitoring for any desired positions.

Description	ID	Often combined
Mounting kit for APS-M1		
AS-APS-M1-PGZN-plus 80-1	0302077	
AS-APS-M1-PGZN-plus 80-2	0302078	
Connection cables		
APS-K0200	0302066	●
APS-K0700	0302068	
Electronic processor		
APS-M1E	0302064	
Sensor		
APS-M1S	0302062	

ⓘ When using an APS system, for each gripper a mounting kit (AS-APS-M1), an APS-M1S sensor (incl. 3 m cable) as well as an electronics (APS-M1e) are required. An extension cable (APS-K) can be connected between the sensor and the electronics as an option. The max. cable length between the sensor and the electronics is 10 m, between the electronics and their control unit (PLC) it is max. 1 m.

Cylindrical reed switches

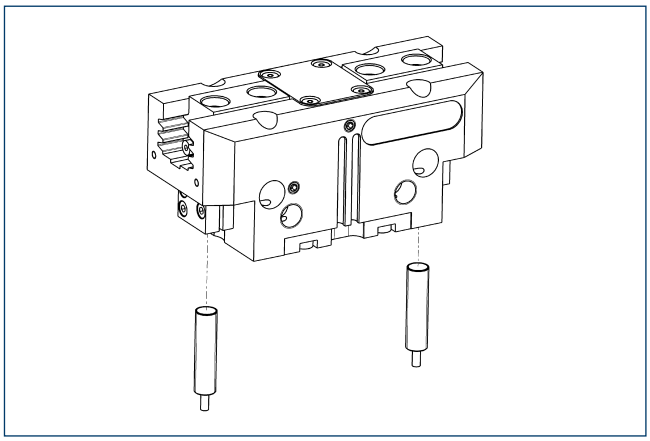

Limit position monitor can be mounted with mounting kit.

Description	ID	
Mounting kit for proximity switch		
AS-RMS 80 PGN/PZN-plus 64/80	0377725	
Reed switches		
RMS 80-S-M8	0377721	

ⓘ Two sensors (closer/S) are required for each unit, plus extension cables as an option. This mounting kit needs to be ordered optionally as an accessory. Two mounting kits are required per gripper. Please note the minimum permitted bending radii for the sensor cables, which are generally 35 mm.

PGN-plus 100

SCHUNK Grippers pneumatic | 2-Finger Parallel Grippers | Universal Gripper

Gripping force, O.D. gripping

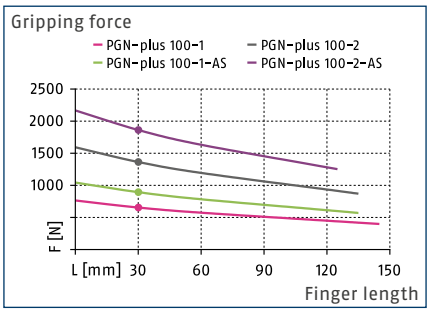

Gripping force, I.D. gripping

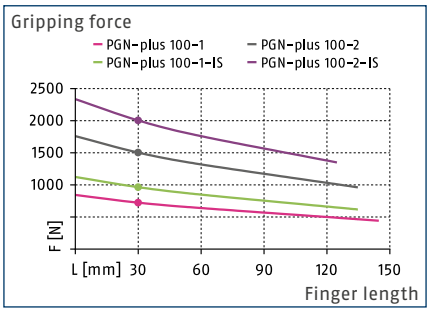

Finger load

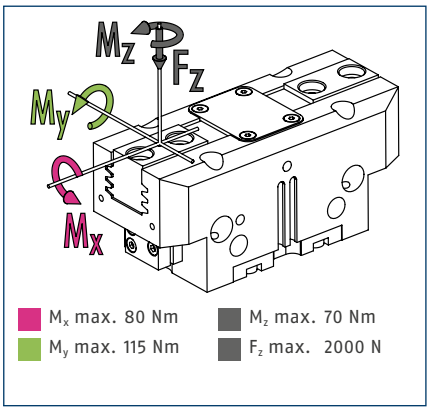

ⓘ The indicated moments and forces are static values, apply per base jaw and may occur simultaneously. M_y may arise in addition to the moment generated by the gripping force itself. If the max. permitted finger weight is exceeded, it is impreative to throttle the air supply so that the jaw movement occurs without any hitting or bouncing. Service life may be reduced.

Technical data

Description		PGN-plus 100-1	PGN-plus 100-2	PGN-plus 100-1-AS	PGN-plus 100-2-AS	PGN-plus 100-1-IS	PGN-plus 100-2-IS
ID		0371102	0371152	0371402	0371452	0371462	0371472
Stroke per jaw	[mm]	10	5	10	5	10	5
Closing- / opening force	[N]	660/725	1370/1500	900/-	1870/-	-/965	-/2000
min. spring force	[N]			240	500	240	500
Weight	[kg]	0.81	0.81	1	1	1	1
Recommended workpiece weight	[kg]	3.3	6.85	3.3	6.85	3.3	6.85
Fluid consumption per double stroke	[cm³]	45	45	79	79	90	90
min. / max. operating pressure	[bar]	2.5/8	2.5/8	4/6.5	4/6.5	4/6.5	4/6.5
Nominal operating pressure	[bar]	6	6	6	6	6	6
Closing- / opening time	[s]	0.07/0.07	0.07/0.07	0.05/0.09	0.05/0.09	0.09/0.05	0.09/0.05
Closing- / opening time only with spring	[s]			0.20	0.20	0.20	0.20
max. permitted finger length	[mm]	145	135	135	125	135	125
max. permitted weight per finger	[kg]	1.1	1.1	1.1	1.1	1.1	1.1
IP class		40	40	40	40	40	40
min. / max. ambient temperature	[°C]	5/90	5/90	5/90	5/90	5/90	5/90
Repeat accuracy	[mm]	0.01	0.01	0.01	0.01	0.01	0.01
Cleanroom class ISO 14644-1		5	5	5	5	5	5
Options and their characteristics							
Dust-tight version		37371102	37371152	37371402	37371452	37371462	37371472
IP class		64	64	64	64	64	64
Weight	[kg]	0.99	0.99	1.18	1.18	1.18	1.18
Anti-corrosion version		38371102	38371152	38371402	38371452	38371462	38371472
High-temperature version		39371102	39371152	39371402	39371452	39371462	39371472
min. / max. ambient temperature	[°C]	5/130	5/130	5/130	5/130	5/130	5/130
Force intensified version		0372102	0372152	0372402		0372462	
Closing- / opening force	[N]	1190/1305	2465/2700	1430/-		-/1545	
Weight	[kg]	1.05	1.05	1.3		1.3	
Maximum pressure	[bar]	6	6	6		6	
max. permitted finger length	[mm]	125	100	100		100	
Precision version		0371124	0371174	0371424	0371439		

ⓘ The full gripping force according to the data table is only realised after around 100 gripping cycles.

Main view

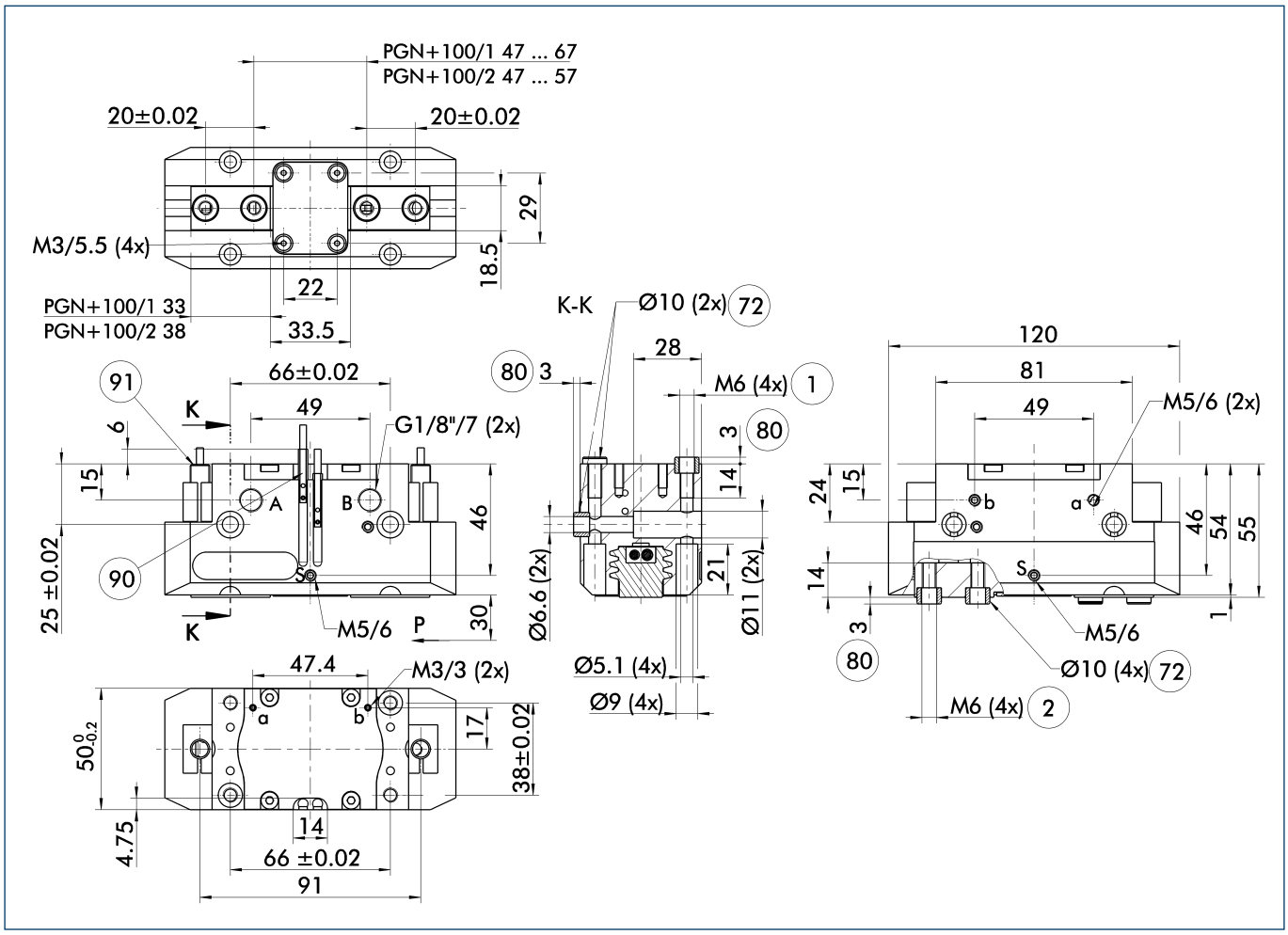

The drawing shows the gripper in the basic version with closed jaws, without dimensional consideration of the options described below.

ⓘ The SDV-P pressure maintenance valve can also be used for I.D. or O.D. gripping alternatively or in addition to the spring-loaded, mechanical gripping force maintenance device (see catalog section on "Accessories").

A, a Main / direct connection, gripper opening

B, b Main / direct connection, gripper closing

S Air purge connection (0.5 ... 1 bar)

(1) Gripper connection

(2) Finger connection

(72) Fit for centering sleeves

(80) Depth of the centering sleeve hole in the mating part

(90) MMS 22... sensor

(91) IN ... sensor

Maximum permitted finger projection

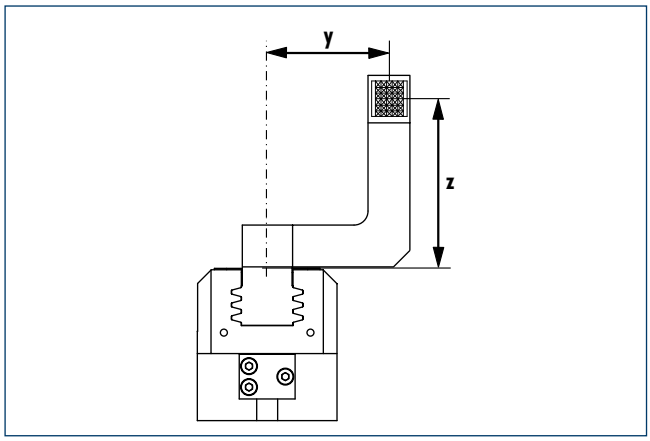

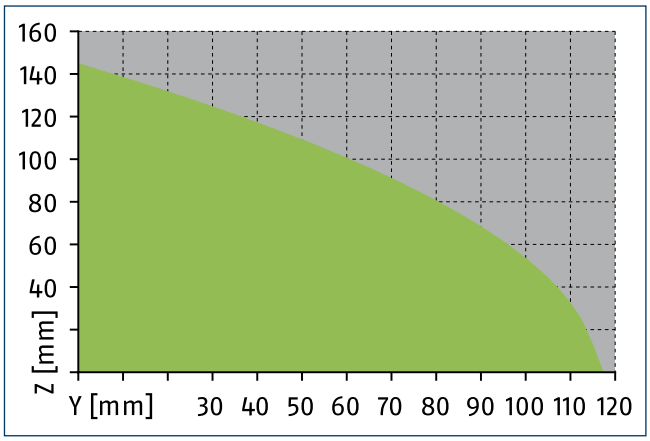

Permitted range

Inadmissible range

The curve applies for the base version (Stroke -1). For other versions, the curve must be offset in parallel corresponding to the max. permissible finger length.

Hose-free direct connection M3

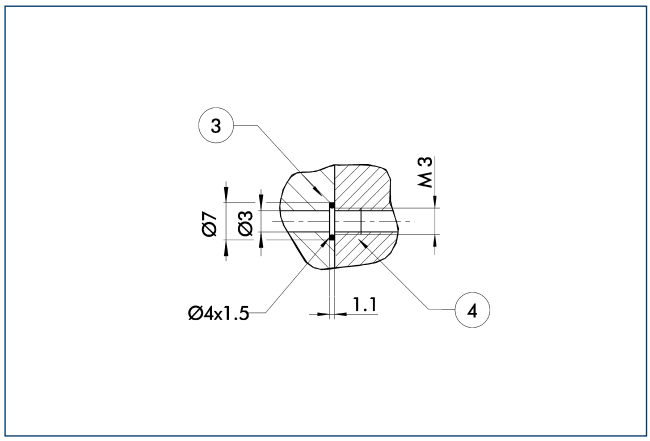

3 Adapter

4 Gripper

The direct connection is used for supplying compressed air without hoses. Instead, the pressure medium is fed through bore-holes in the mounting plate.

Gripping force maintenance device AS / IS

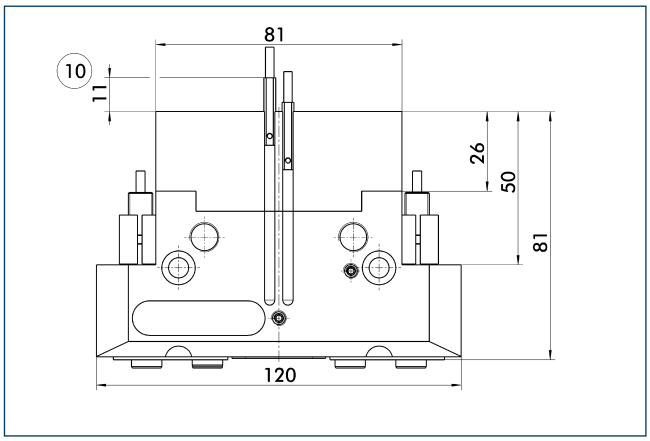

10 Projection applies only for AS version

The mechanical maintenance of gripping force also assures a minimum gripping force in the case of a loss of pressure. With the AS / S variant, this acts as a closing force, and as an opening force for the IS variant. The maintenance of gripping force element can also be used as a means for increasing gripping force or for single actuated gripping.

Dust-tight version

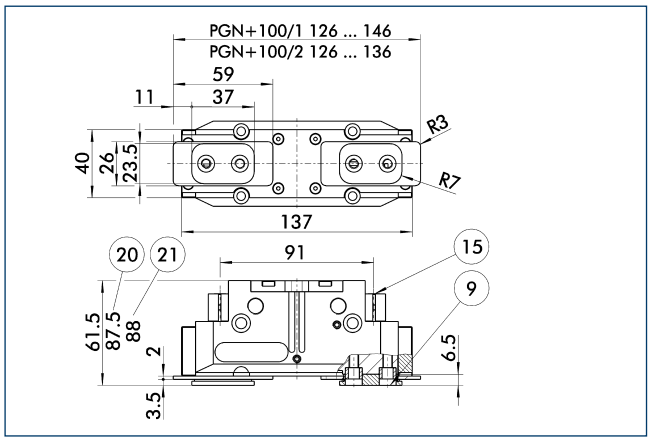

(9) For mounting screw connection diagram, see basic version
(15) Sealing bolt
(20) For AS / IS version
(21) For KVZ version

The "dust-protection" option increases the degree of protection against penetrating substances. The screw connection diagram shifts by the height of the intermediate jaw. The finger length is still measured from the upper edge of the gripper housing.

Force intensified version

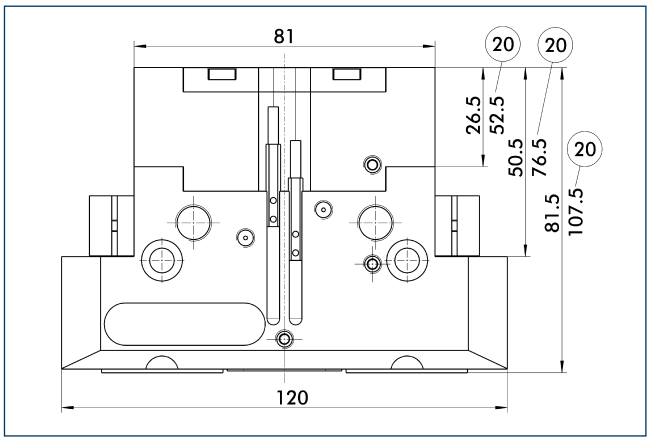

(20) For AS / IS version

The KVZ power booster cylinder increases gripping forces for opening and closing. A second piston connected in a series increases the force on the diagonal pull for this purpose. If applicable, observe the additional installation height for combination with an element for maintenance of gripping force.

Precision version

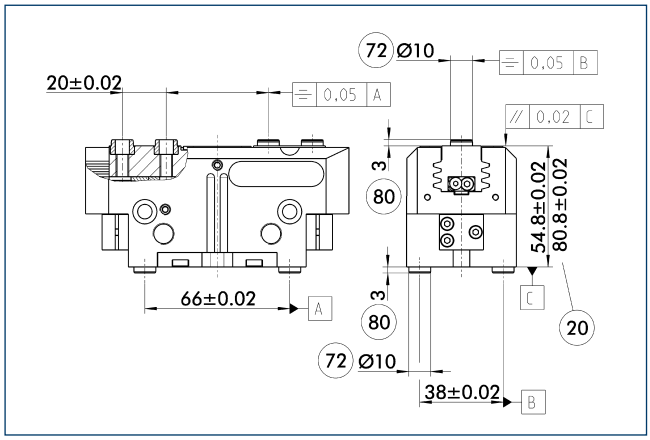

(20) For AS / IS version
(72) Fit for centering sleeves
(80) Depth of the centering sleeve hole in the mating part

The indicated tolerances just refer to the types of precision versions shown in the chart of technical specifications. All other types of precision versions are available on request.

SDV-P pressure maintenance valve

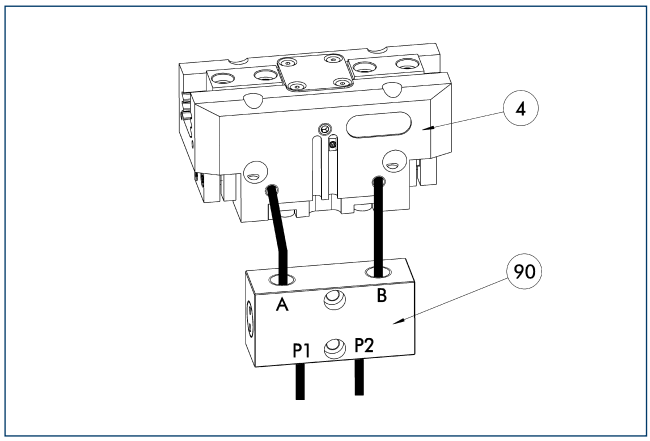

(4) Gripper

(90) SDV-P pressure maintenance valve

The SDV-P pressure maintenance valves ensure that the pressure in the piston chamber of pneumatic gripping, rotary, linear, and quick-change modules is maintained temporarily during an emergency stop.

Description	ID	
Pressure maintenance valve		
SDV-P 04	0403130	

HUE PGN-plus 100 protective cover

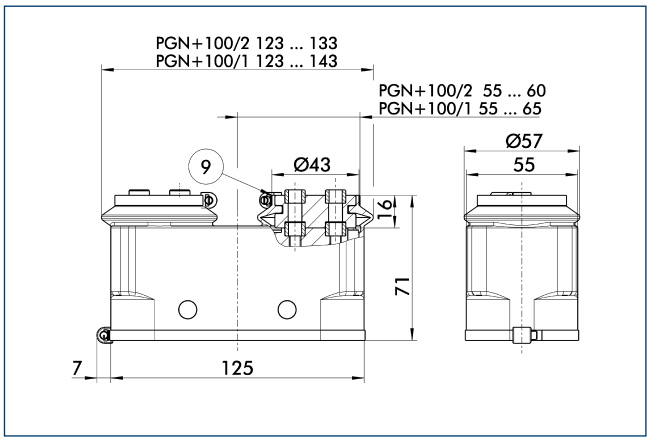

(9) For mounting screw connection diagram, see basic version

The HUE protective cover completely protects the gripper against external influences up to IP65 if an additional sealing of the cover bottom is provided as part of the application. The mounting diagram shifts by the height of the intermediate jaw.

Description	ID	Cleanroom class ISO 14644-1	IP class
Protection cover			
HUE PGN-plus 100	0371482	2	65

BSWS jaw quick-change systems

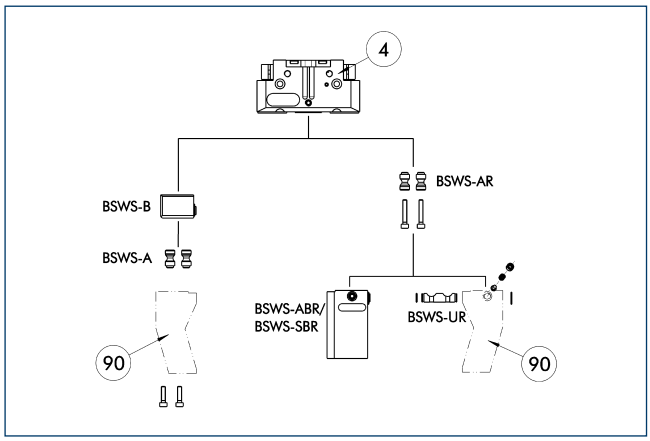

(4) Gripper
(90) Customized gripper fingers

There are various jaw quick-change systems available for the grippers. For detailed information, refer to the appropriate product.

Description	ID	
Jaw quick-change system adapter		
BSWS-AR 100	0300094	
BSWS-A 100	0303026	
Jaw quick-change system base		
BSWS-B 100	0303027	
Finger blanks with jaw quick-change system		
BSWS-ABR-PGZN-plus 100	0300074	
BSWS-SBR-PGZN-plus 100	0300084	
Jaw quick-change system reversed		
BSWS-UR 100	0302993	

ⓘ Only the systems listed in the table can be used.

ZBA L-plus 100 intermediate jaws

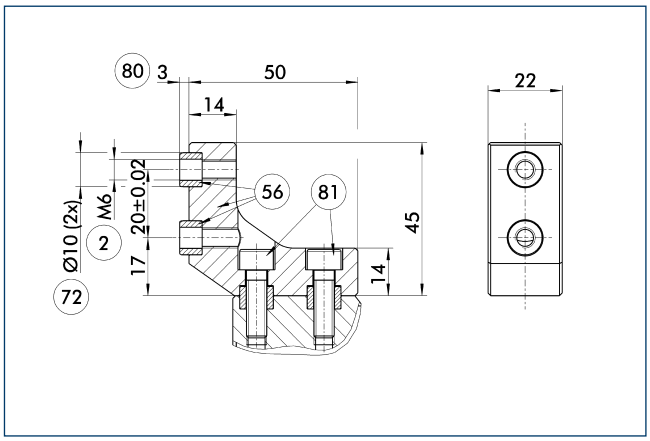

(2) Finger connection
(56) Included in delivery
(72) Fit for centering sleeves
(80) Depth of the centering sleeve hole in the mating part
(81) Not included in the scope of delivery

Optionally intermediate jaws can be used, enabling direct connection and alignment of top jaws and various standard accessories in Z-direction.

Description	ID	Material	Scope of delivery
Intermediate jaws			
ZBA-L-plus 100	0311742	Aluminum	1

UZB 100 universal intermediate jaw

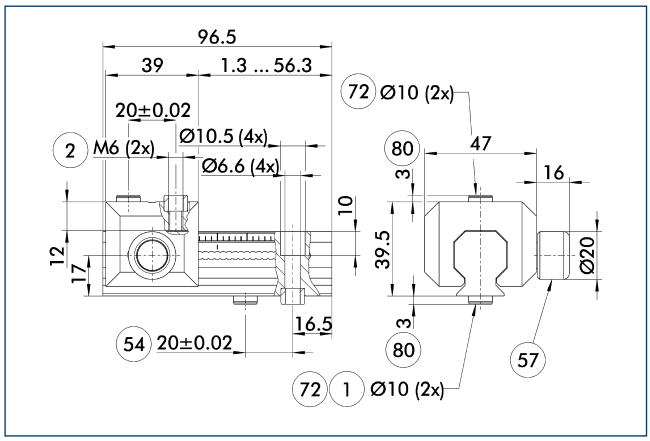

1. Gripper connection
2. Finger connection
54. Optional right or left connection
57. Locking
72. Fit for centering sleeves
80. Depth of the centering sleeve hole in the mating part

The universal intermediate jaw allows fast tool-free and reliable plugging and shifting of top jaws at the gripper.

Description	ID	Grid dimension [mm]
Universal intermediate jaw		
UZB 100	0300044	2.5
UZB-S 100	5518272	2.5
Finger blanks		
ABR-PGZN-plus 100	0300012	
SBR-PGZN-plus 100	0300022	

FMS-ZBA / ZBP 100 force-measuring jaws

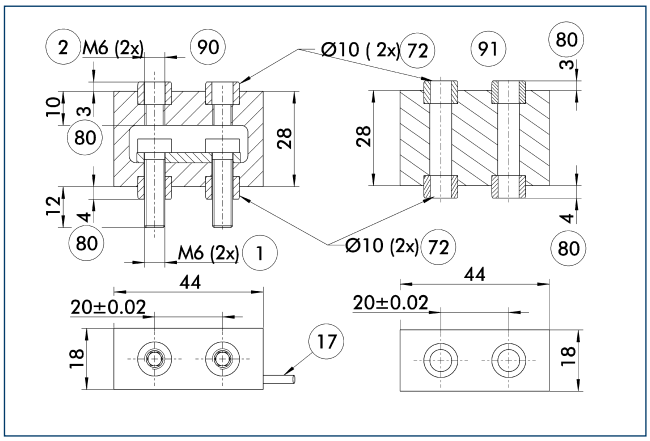

1. Gripper connection
2. Finger connection
17. Cable outlet
72. Fit for centering sleeves
80. Depth of the centering sleeve hole in the mating part
90. Active intermediate jaws
91. Passive intermediate jaws

Force measuring jaws measure gripping forces, but can also determine workpiece weights or dimensional deviations. There are active and passive intermediate jaws (FMS-ZBA or FMS-ZBP). At least one active force measuring jaw is required per gripper, the rest can be passive. For each active jaw, a FMS-A control unit and a FMS-AK connection cable are required.

Description	ID	Often combined
Active intermediate jaws		
FMS-ZBA 100	0301836	
Passive intermediate jaws		
FMS-ZBP 100	0301837	
Connection cables		
FMS-AK0200	0301820	●
FMS-AK0500	0301821	
FMS-AK1000	0301822	
FMS-AK2000	0301823	
Electronic processor		
FMS-A1	0301810	

ABR- / SBR-PGZN-plus 100 finger blanks

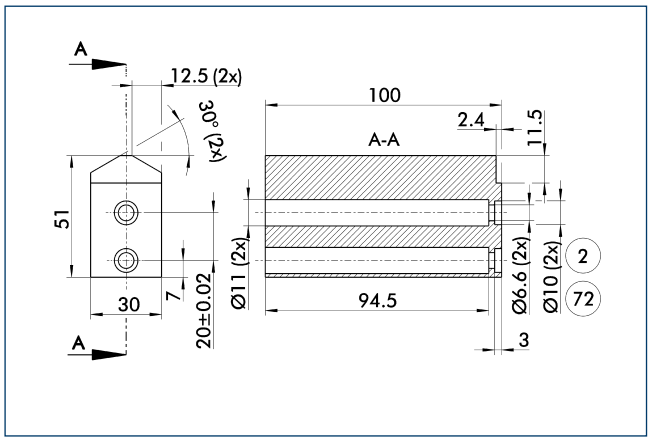

(2) Finger connection (72) Fit for centering sleeves

Finger blanks for customized subsequent machining.

Description	ID	Material	Scope of delivery
Finger blanks			
ABR-PGZN-plus 100	0300012	Aluminum	1
SBR-PGZN-plus 100	0300022	16MnCr5	1

OAS-PGN-plus 100 object distance sensor

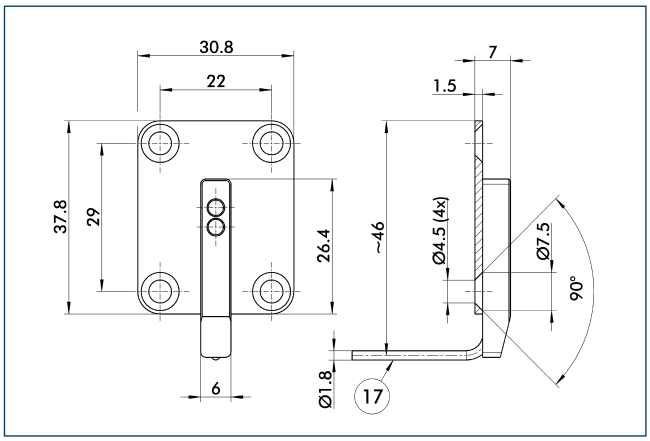

(17) Cable outlet

Description	ID	
Object distance sensor		
OAS-PGN-plus 100	0308879	

Object distance sensor

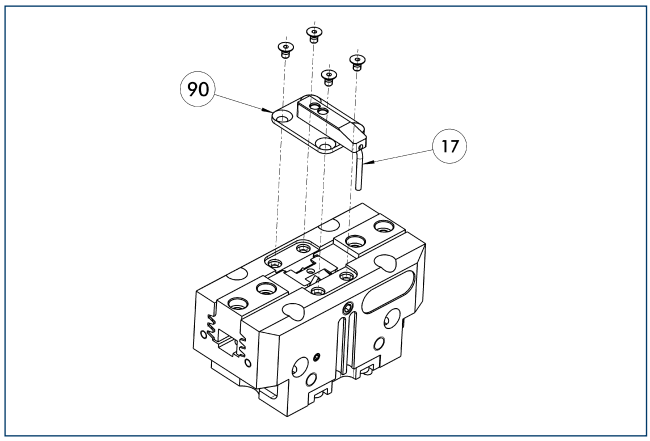

(17) Cable outlet (90) OAS

Optical distance and presence sensor for direct mounting on the gripper. One OAS sensor per gripper can be assembled.

Description	ID	
Object distance sensor		
OAS-PGN-plus 100	0308879	
Electronic processor		
OAS-V09-D	0308865	
OAS-V10-A	0308867	
OAS-V10-D	0308866	

ⓘ The evaluation of the OAS can be done with either an analog or digital evaluation unit and with or without a display. The states which should be detected can be simply taught.

Attachment valves

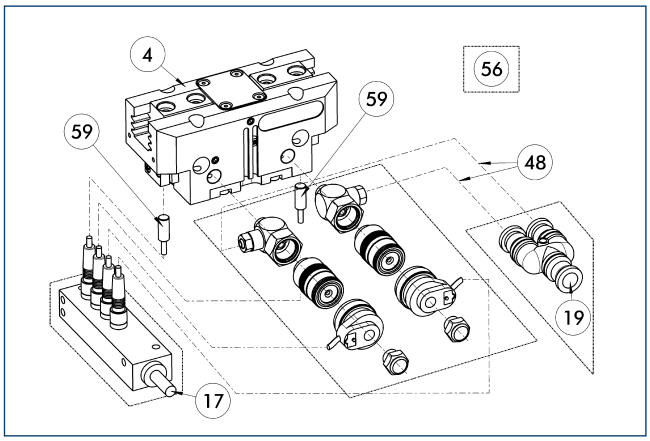

(4) Gripper (48) Hose
(17) Cable outlet (56) Included in delivery
(19) Air connection (59) Monitoring gripping

For each unit one attachment valve ABV is required, optional with distributor for sensors and valves. Attachment valves increase the efficiency, reduce the installation work and air consumption and simplify air supply. For details please refer to the "Accessories" catalog section.

Description	ID	Often combined
Attachment valves		
ABV-MV30-G1/8	0303328	
ABV-MV30-G1/8-V2-M8	0303396	
ABV-MV30-G1/8-V4-M8	0303366	●
ABV-MV30-G1/8-V8-M8	0303367	

Modular assembly automation

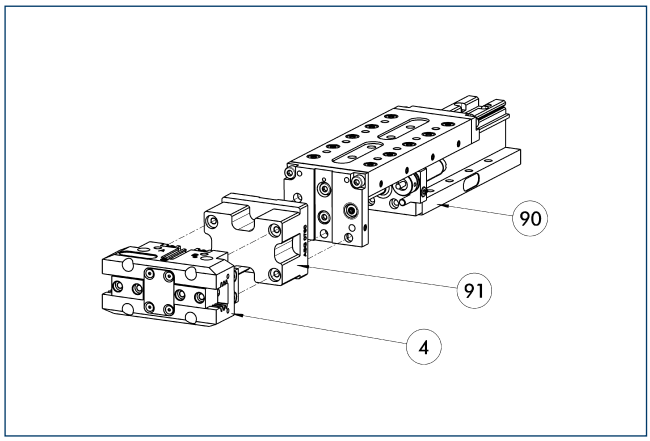

(4) Gripper
(90) CLM / KLM / LM / ELM / ELS / HLM linear module
(91) ASG adapter plate

Gripper and linear modules can be combined with standard adapters out of the modular assembly system. For more information see our catalog "Modular Assembly Automation".

VB-PGN-plus 100 valve box

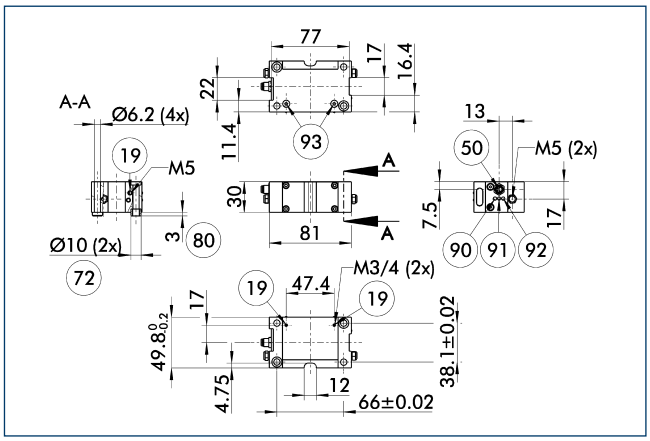

(19) Air connection
(50) Electrical connection
(72) Fit for centering sleeves
(80) Depth of the centering sleeve hole in the mating part
(90) Power supply
(91) Valve switched b for gripper opened
(92) Valve switched a for gripper opened
(93) Valve switched a and b

Description	ID	
Valve box		
VB-PGN-plus 100	0310094	

Valve box

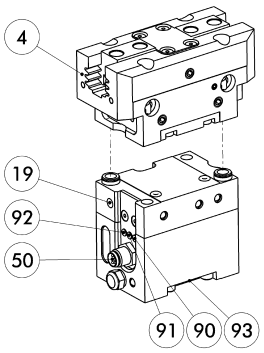

(4) Gripper
(19) Air connection
(50) Electrical connection
(90) Power supply
(91) Valve switched b for gripper opened
(92) Valve switched a for gripper opened
(93) Direct connection for hose-free compressed air supply

Ready to install, local control solution! Valves are attached directly to the handling component. As a result, cycle times are significantly reduced and the number of hoses, commissioning times, and air consumption are minimised while maximum process safety is assured.

Description	ID	Often combined
Valve box		
VB-PGN-plus 100	0310094	
Connection cables		
KA BG08-L 4P-0500	0307767	●
KA BG08-L 4P-1000	0307768	
KA BW08-L 4P-0500	0307765	
KA BW08-L 4P-1000	0307766	
Sensor distributor		
V2-M8-4P-2XM8-3P	0301380	
Clip for plug / socket		
CLI-M8	0301463	

ⓘ Valve and sensor signals of the unit can be merged on a bus distributor so that the electrical as well as the pneumatic connections can be decentralized.

Inductive proximity switches

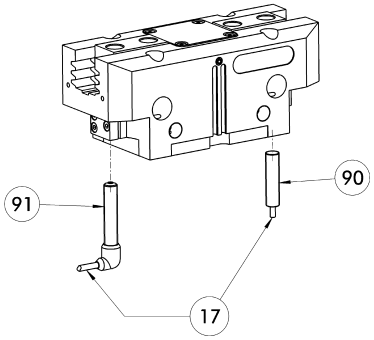

(17) Cable outlet
(90) IN ... sensor
(91) IN ...-SA sensor

Directly mounted limit position monitor.

Description	ID	Often combined
Inductive proximity switches		
IN 80-S-M12	0301578	
IN 80-S-M8	0301478	●
IN-C 80-S-M8	0301475	
INK 80-S	0301550	
Inductive proximity switches with lateral outlet		
IN 80-S-M8-SA	0301483	●
Cable extensions		
KV BG12-SG12 3P-0030-PNP	0301999	
KV BG12-SG12 3P-0060-PNP	0301998	
KV BW08-SG08 3P-0030-PNP	0301495	
KV BW08-SG08 3P-0100-PNP	0301496	
KV BW08-SG08 3P-0200-PNP	0301497	●
KV BW12-SG12 3P-0030-PNP	0301595	
KV BW12-SG12 3P-0100-PNP	0301596	
KV BW12-SG12 3P-0200-PNP	0301597	
Clip for plug / socket		
CLI-M12	0301464	
CLI-M8	0301463	
Connection cables		
KA BG08-L 3P-0300-PNP	0301622	●
KA BG08-L 3P-0500-PNP	0301623	
KA BG12-L 3P-0500-PNP	30016369	
KA BW08-L 3P-0300-PNP	0301594	
KA BW08-L 3P-0500-PNP	0301502	
KA BW12-L 3P-0300-PNP	0301503	
KA BW12-L 3P-0500-PNP	0301507	
Sensor distributor		
V2-M8	0301775	●
V2-M12	0301776	●
V4-M12	0301747	
V4-M8	0301746	
V8-M12	0301752	

ⓘ Two sensors (closer/S) are required for each unit, plus extension cables as an option. Please note the minimum permitted bending radii for the sensor cables, which are generally 35 mm.

Flexible position sensor

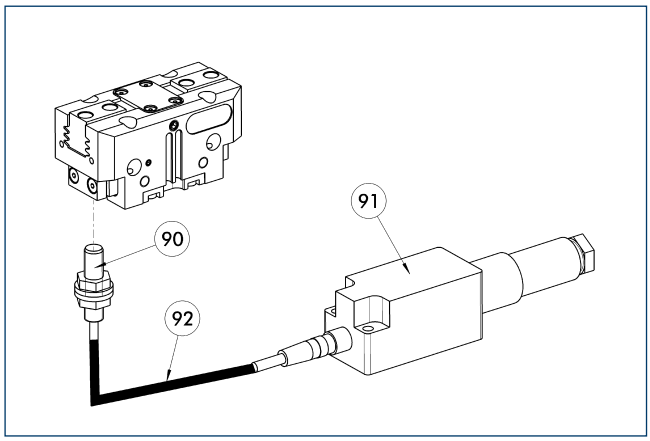

(90) FPS-S sensor
(91) FPS-F5 / -F5 T electronic processor
(92) Cable extensions

Flexible position monitoring of up to five positions.

Description	ID	Often combined
Mounting kit for FPS		
AS-FPS-PGZN-plus 100-1	0301634	
AS-FPS-PGZN-plus 100-2/PZB 125	0301635	
Electronic processor		
FPS-F5	0301805	●
FPS-F5 T	0301807	
Sensor		
FPS-S M8	0301704	
Clip for plug / socket		
CLI-M8	0301463	

ⓘ When using a FPS system, a FPS sensor (FPS-S) and a control unit (FPS-F5 / F5 T) are required for each gripper as well as a mounting kit (AS), if listed. Cable extensions (KV) are available as options in the "Accessories" catalog section.

MMS electronic magnetic switches

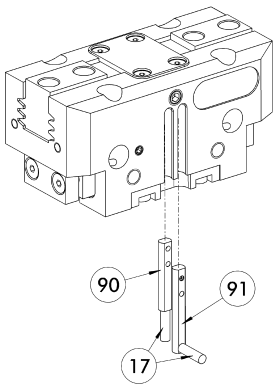

(17) Cable outlet
(90) MMS 22... sensor
(91) MMS 22...-SA sensor

End position monitoring for mounting in the C-slot.

Description	ID	Often combined
MMS electronic magnetic switches		
MMS 22-S-M8-PNP	0301032	●
MMSK 22-S-PNP	0301034	
MMS electronic magnetic switches with lateral cable outlet		
MMS 22-S-M8-PNP-SA	0301042	●
MMSK 22-S-PNP-SA	0301044	
Reed switches		
RMS 22-S-M8	0377720	●
Cable extensions		
KV BW08-SG08 3P-0030-PNP	0301495	
KV BW08-SG08 3P-0100-PNP	0301496	
KV BW08-SG08 3P-0200-PNP	0301497	●
Clip for plug / socket		
CLI-M8	0301463	
Connection cables		
KA BG08-L 3P-0300-PNP	0301622	●
KA BG08-L 3P-0500-PNP	0301623	
KA BW08-L 3P-0300-PNP	0301594	
KA BW08-L 3P-0500-PNP	0301502	
RSS radio sensor system		
RSS-T2	0377710	
Sensor distributor		
V2-M8	0301775	●
V4-M8	0301746	
V8-M8	0301751	

ⓘ Two sensors (closer/S) are required for each unit, plus extension cables as an option. Please note the minimum permitted bending radii for the sensor cables, which are generally 35 mm.

MMS PI1 programmable magnetic switches

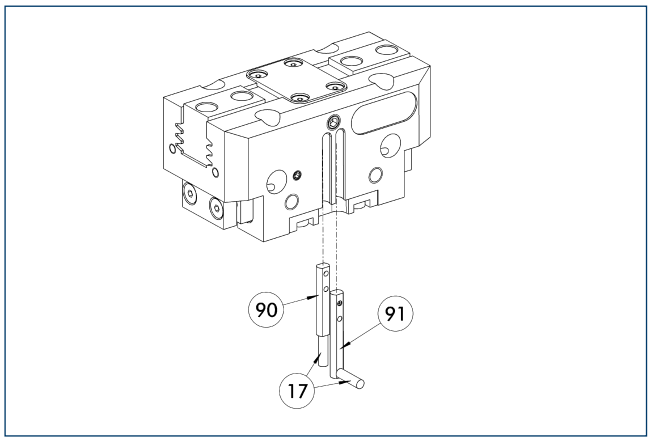

(17) Cable outlet
(91) MMS 22...-PI1-...-SA sensor
(90) MMS 22...-PI1-... sensor

Position query with one programmable position per sensor and electronics integrated in sensor. Programmable via MT magnet teaching tool (included in the scope of delivery) or ST plug teaching tool (optional). Limit position query mounted in C-groove. If the ST plug teaching tools are listed in the table, teaching can only take place with the ST plug teaching tools.

Description	ID	Often combined
MMS PI1 programmable magnetic switches		
MMS 22-PI1-S-M8-PNP	0301160	●
MMSK 22-PI1-S-PNP	0301162	
MMS PI1-HD programmable magnetic switches with stainless steel housing		
MMS 22-PI1-S-M8-PNP-HD	0301110	●
MMSK 22-PI1-S-PNP-HD	0301112	
MMS PI1 programmable magnetic switches with lateral cable outlet		
MMS 22-PI1-S-M8-PNP-SA	0301166	●
MMSK 22-PI1-S-PNP-SA	0301168	

ⓘ Two sensors (closer/S) are required for each unit, plus extension cables as an option. Please note the minimum permitted bending radii for the sensor cables, which are generally 35 mm. Connection cable, cable extensions, and sensor distributors can be found in the table for the MMS 22.

MMS PI2 programmable magnetic switches

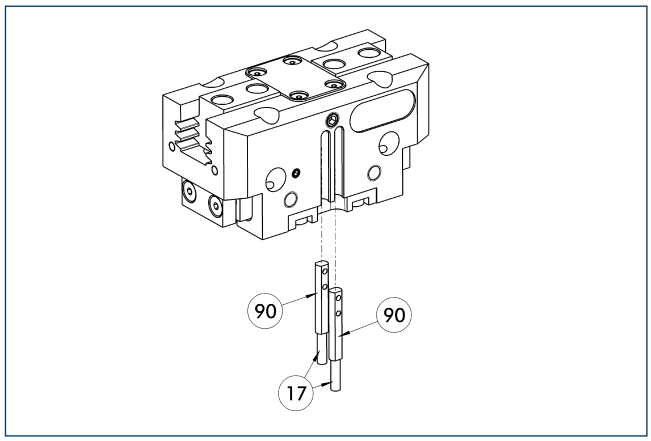

(17) Cable outlet
(90) MMS 22...-PI2-... sensor

Position query with two programmable positions per sensor and electronics integrated in sensor. Programmable via MT magnet teaching tool (included in the scope of delivery) or ST plug teaching tool (optional). Limit position query mounted in C-groove. If the ST plug teaching tools are listed in the table, teaching can only take place with the ST plug teaching tools.

Description	ID	Often combined
MMS PI2 programmable magnetic switches		
MMS 22-PI2-S-M8-PNP	0301180	●
MMSK 22-PI2-S-PNP	0301182	
MMS PI2-HD programmable magnetic switches with stainless steel housing		
MMS 22-PI2-S-M8-PNP-HD	0301130	●
MMSK 22-PI2-S-PNP-HD	0301132	

ⓘ Per unit one sensor (closer/S) is required, optionally a cable extension. Please note the minimum permitted bending radii for the sensor cables, which are generally 35 mm. Connection cable, cable extensions, and sensor distributors can be found in the table for the MMS-P 22.

MMS-P programmable magnetic switches

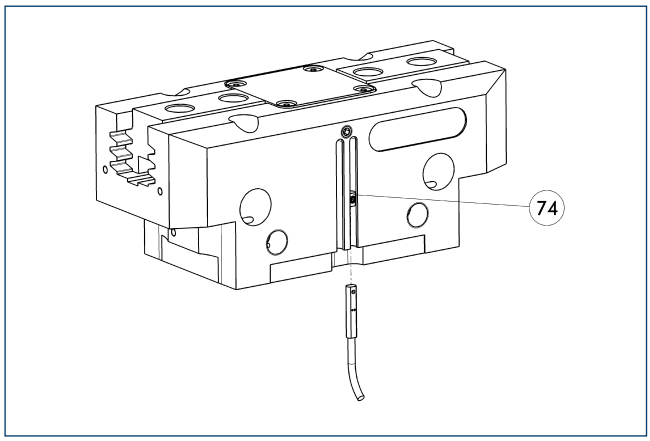

74 Stop for MMS-P

Position monitoring with two programmable positions per sensor. The end position monitoring is mounted in the C-slot.

Description	ID	Often combined
MMS-P programmable magnetic switches		
MMSK-P 22-S-PNP	0301371	
MMS-P 22-S-M8-PNP	0301370	●
Clip for plug / socket		
CLI-M8	0301463	
Connection cables		
KA BG08-L 4P-0500	0307767	●
KA BG08-L 4P-1000	0307768	
KA BW08-L 4P-0500	0307765	
KA BW08-L 4P-1000	0307766	
Sensor distributor		
V2-M8-4P-2XM8-3P	0301380	

ⓘ Per unit one sensor (closer/S) is required, optionally a cable extension. Please note the minimum permitted bending radii for the sensor cables, which are generally 35 mm.

APS-Z80 analog position sensor

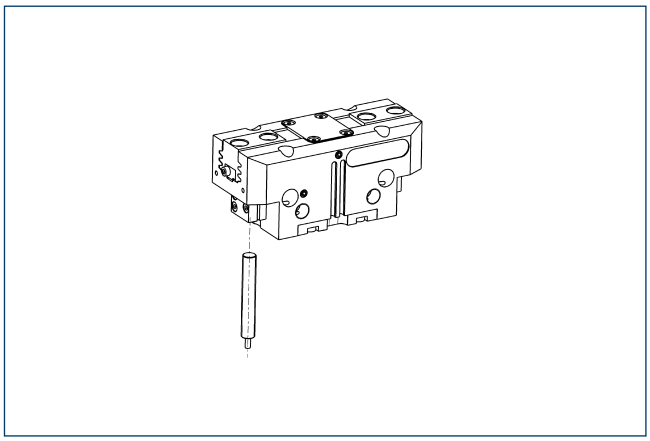

Contactlessly measuring, analog multi-position monitoring for any number of positions.

Description	ID	Often combined
Mounting kit for APS-Z80		
AS-APS-Z80-PGZN-plus 100-1	0302109	
AS-APS-Z80-PGZN-plus 100-2	0302110	
Sensor		
APS-Z80-K	0302072	
APS-Z80-M8	0302070	●

ⓘ When using an APS system, one mounting kit (AS-APS-Z80) and one APS-Z80 sensor is required per gripper.

MMS-A analog position sensor

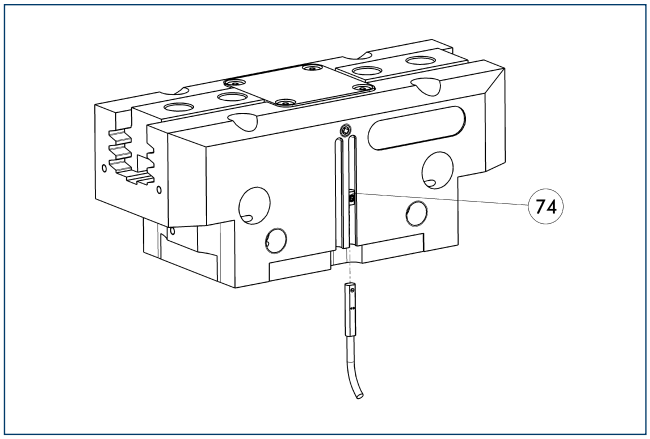

74 Stop for MMS-P

Contactlessly measuring, analog multi-position monitoring for any number of positions.

Description	ID	
Analog position sensor		
MMS 22-A-05V-M08	0315800	
MMS 22-A-10V-M08	0315820	

ⓘ One sensor is needed for each gripper. No additional mounting kit is needed – the standard gripper is equipped for use of the MMS-A.

APS-M1 analog position sensor

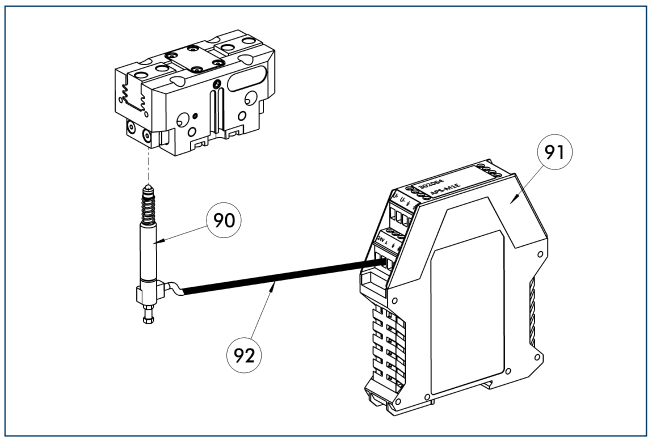

(90) APS-M1S sensor
(91) APS-M1E electronic processor
(92) APS-K extension cable

Analog multi position monitoring for any desired positions.

Description	ID	Often combined
Mounting kit for APS-M1		
AS-APS-M1-PGZN-plus 100-1	0302079	
AS-APS-M1-PGZN-plus 100-2	0302080	
Connection cables		
APS-K0200	0302066	●
APS-K0700	0302068	
Electronic processor		
APS-M1E	0302064	
Sensor		
APS-M1S	0302062	

ⓘ When using an APS system, for each gripper a mounting kit (AS-APS-M1), an APS-M1S sensor (incl. 3 m cable) as well as an electronics (APS-M1e) are required. An extension cable (APS-K) can be connected between the sensor and the electronics as an option. The max. cable length between the sensor and the electronics is 10 m, between the electronics and their control unit (PLC) it is max. 1 m.

Cylindrical reed switches

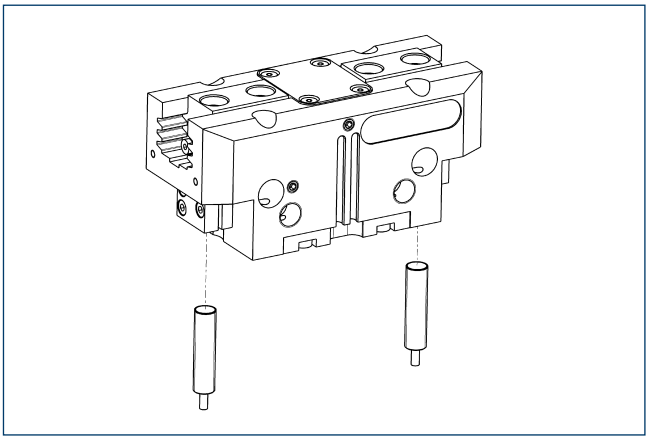

Limit position monitor can be mounted with mounting kit.

Description	ID	
Mounting kit for proximity switch		
AS-RMS 80 PGN/PZN-plus 100/125	0377726	
Reed switches		
RMS 80-S-M8	0377721	

ⓘ Two sensors (closer/S) are required for each unit, plus extension cables as an option. This mounting kit needs to be ordered optionally as an accessory. Please note the minimum permitted bending radii for the sensor cables, which are generally 35 mm.

PGN-plus 125

SCHUNK Grippers pneumatic | 2-Finger Parallel Grippers | Universal Gripper

Gripping force, O.D. gripping

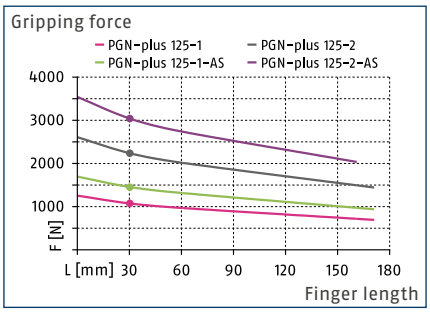

Gripping force, I.D. gripping

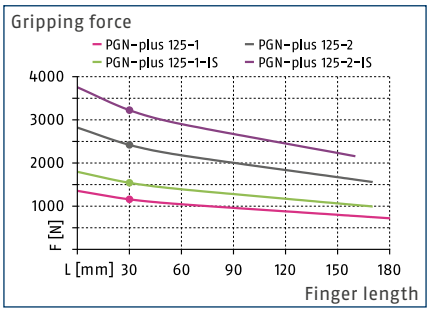

Finger load

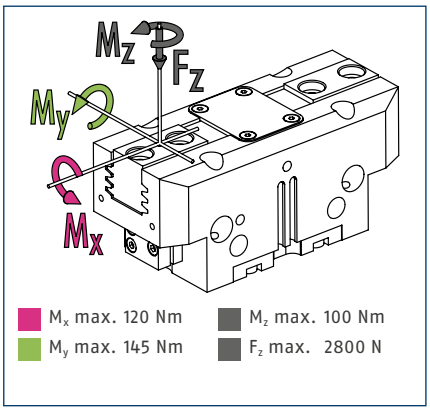

ⓘ The indicated moments and forces are static values, apply per base jaw and may occur simultaneously. M_y may arise in addition to the moment generated by the gripping force itself. If the max. permitted finger weight is exceeded, it is impreative to throttle the air supply so that the jaw movement occurs without any hitting or bouncing. Service life may be reduced.

Technical data

Description		PGN-plus 125-1	PGN-plus 125-2	PGN-plus 125-1-AS	PGN-plus 125-2-AS	PGN-plus 125-1-IS	PGN-plus 125-2-IS
ID		0371103	0371153	0371403	0371453	0371463	0371473
Stroke per jaw	[mm]	13	6	13	6	13	6
Closing- / opening force	[N]	1080/1170	2240/2420	1470/-	3040/-	-/1560	-/3220
min. spring force	[N]			390	800	390	800
Weight	[kg]	1.35	1.35	1.85	1.85	1.85	1.85
Recommended workpiece weight	[kg]	5.4	11.2	5.4	11.2	5.4	11.2
Fluid consumption per double stroke	[cm³]	87	87	119	119	166	166
min. / max. operating pressure	[bar]	2.5/8	2.5/8	4/6.5	4/6.5	4/6.5	4/6.5
Nominal operating pressure	[bar]	6	6	6	6	6	6
Closing- / opening time	[s]	0.1/0.1	0.1/0.1	0.08/0.12	0.08/0.12	0.12/0.08	0.12/0.08
Closing- / opening time only with spring	[s]			0.30	0.30	0.30	0.30
max. permitted finger length	[mm]	180	170	170	160	170	160
max. permitted weight per finger	[kg]	2.1	2.1	2.1	2.1	2.1	2.1
IP class		40	40	40	40	40	40
min. / max. ambient temperature	[°C]	5/90	5/90	5/90	5/90	5/90	5/90
Repeat accuracy	[mm]	0.01	0.01	0.01	0.01	0.01	0.01
Cleanroom class ISO 14644-1		5	5	5	5	5	5
Options and their characteristics							
Dust-tight version		37371103	37371153	37371403	37371453	37371463	37371473
IP class		64	64	64	64	64	64
Weight	[kg]	1.55	1.55	2.05	2.05	2.05	2.05
Anti-corrosion version		38371103	38371153	38371403	38371453	38371463	38371473
High-temperature version		39371103	39371153	39371403	39371453	39371463	39371473
min. / max. ambient temperature	[°C]	5/130	5/130	5/130	5/130	5/130	5/130
Force intensified version		0372103	0372153	0372403		0372463	
Closing- / opening force	[N]	1945/2105	4030/4355	2335/-		-/2495	
Weight	[kg]	1.85	1.85	2.3		2.3	
Maximum pressure	[bar]	6	6	6		6	
max. permitted finger length	[mm]	160	125	125		125	
Precision version		0371125	0371175	0371425	0371440		

ⓘ The full gripping force according to the data table is only realised after around 100 gripping cycles.

Main view

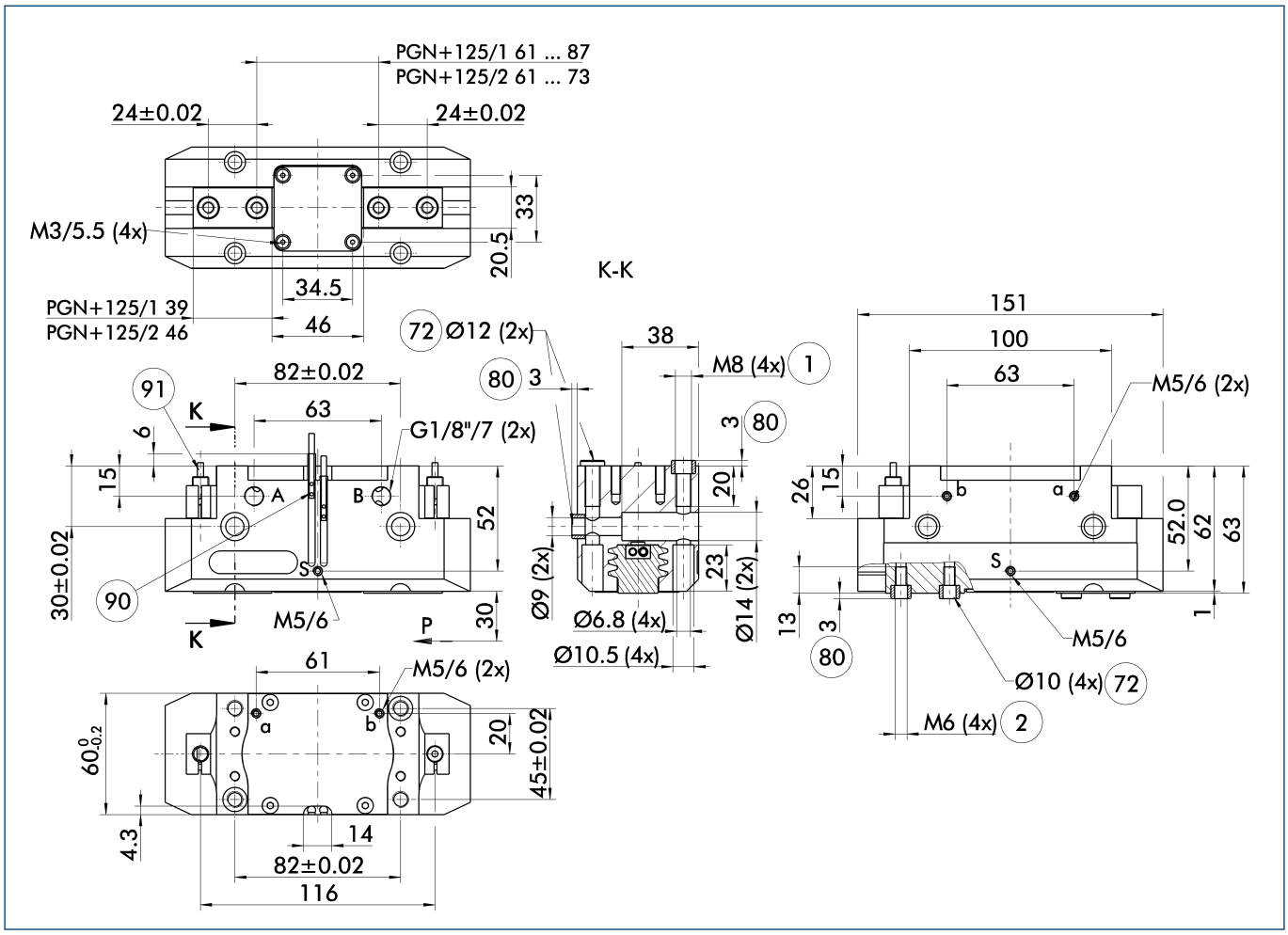

The drawing shows the gripper in the basic version with closed jaws, without dimensional consideration of the options described below.

ⓘ The SDV-P pressure maintenance valve can also be used for I.D. or O.D. gripping alternatively or in addition to the spring-loaded, mechanical gripping force maintenance device (see catalog section on "Accessories").

A, a Main / direct connection, gripper opening

B, b Main / direct connection, gripper closing

S Air purge connection (0.5 ... 1 bar)

(1) Gripper connection

(2) Finger connection

(72) Fit for centering sleeves

(80) Depth of the centering sleeve hole in the mating part

(90) MMS 22... sensor

(91) IN ... sensor

Maximum permitted finger projection

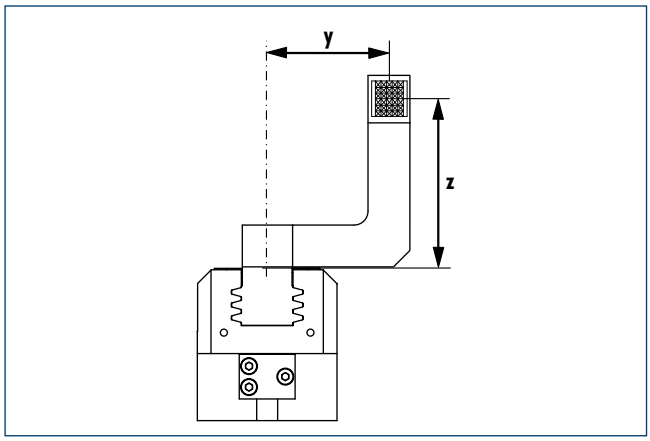

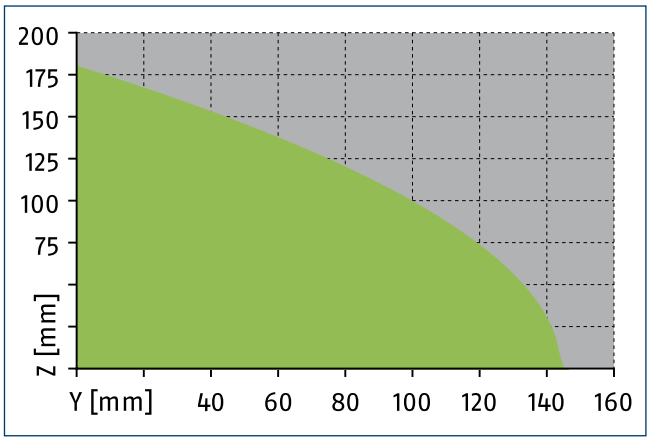

Permitted range

Inadmissible range

The curve applies for the base version (Stroke -1). For other versions, the curve must be offset in parallel corresponding to the max. permissible finger length.

Hose-free direct connection M5

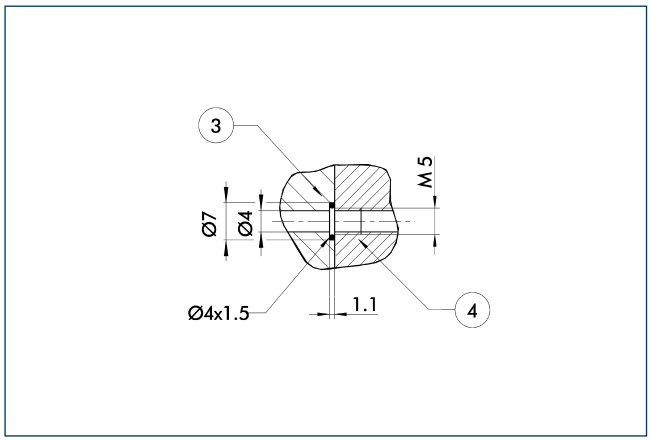

(3) Adapter (4) Gripper

The direct connection is used for supplying compressed air without hoses. Instead, the pressure medium is fed through bore-holes in the mounting plate.

Gripping force maintenance device AS / IS

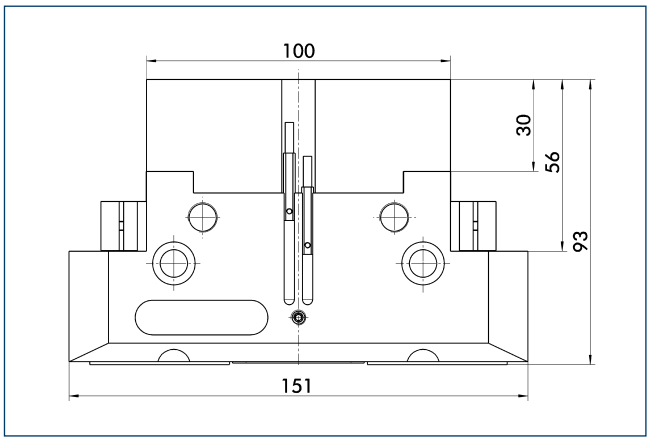

The mechanical maintenance of gripping force also assures a minimum gripping force in the case of a loss of pressure. With the AS / S variant, this acts as a closing force, and as an opening force for the IS variant. The maintenance of gripping force element can also be used as a means for increasing gripping force or for single actuated gripping.

Dust-tight version

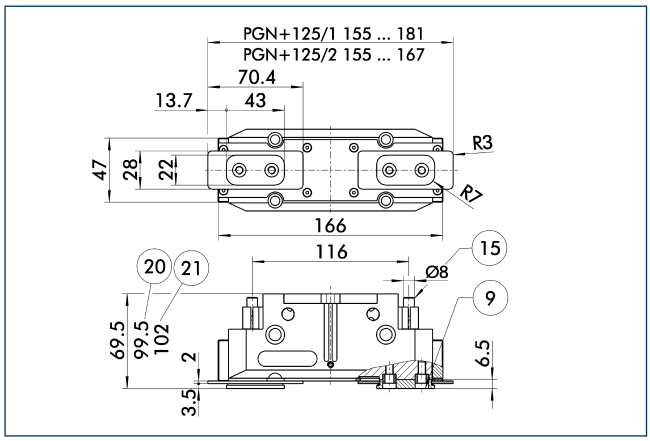

(9) For mounting screw connection diagram, see basic version
(15) Sealing bolt
(20) For AS / IS version
(21) For KVZ version

The "dust-protection" option increases the degree of protection against penetrating substances. The screw connection diagram shifts by the height of the intermediate jaw. The finger length is still measured from the upper edge of the gripper housing.

Force intensified version

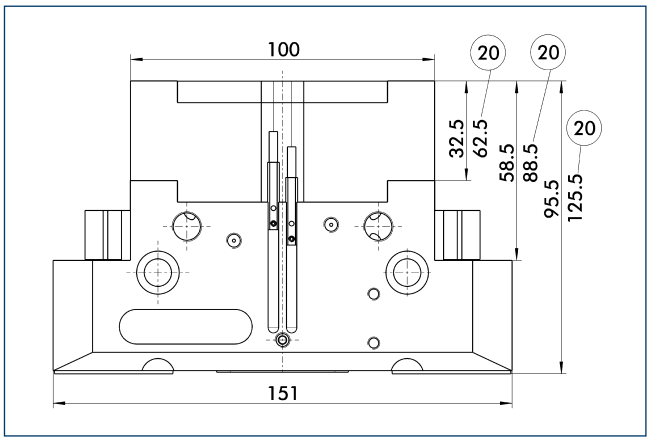

(20) For AS / IS version

The KVZ power booster cylinder increases gripping forces for opening and closing. A second piston connected in a series increases the force on the diagonal pull for this purpose. If applicable, observe the additional installation height for combination with an element for maintenance of gripping force.

Precision version

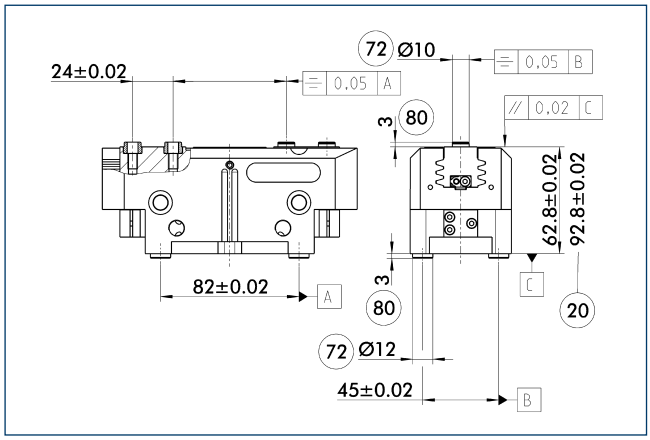

(20) For AS / IS version
(72) Fit for centering sleeves
(80) Depth of the centering sleeve hole in the mating part

The indicated tolerances just refer to the types of precision versions shown in the chart of technical specifications. All other types of precision versions are available on request.

SDV-P pressure maintenance valve

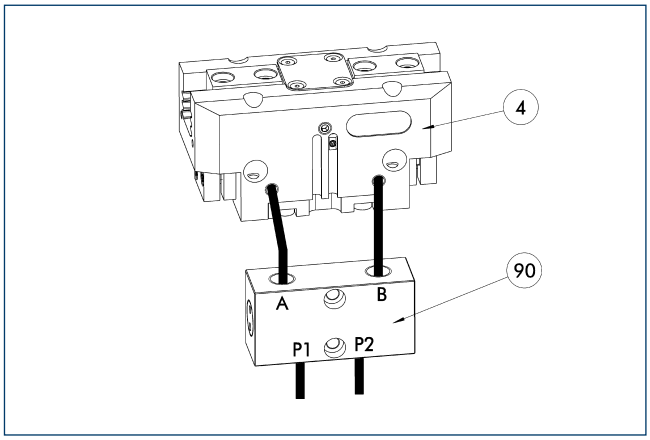

(4) Gripper
(90) SDV-P pressure maintenance valve

The SDV-P pressure maintenance valves ensure that the pressure in the piston chamber of pneumatic gripping, rotary, linear, and quick-change modules is maintained temporarily during an emergency stop.

Description	ID	
Pressure maintenance valve		
SDV-P 04	0403130	

HUE PGN-plus 125 protective cover

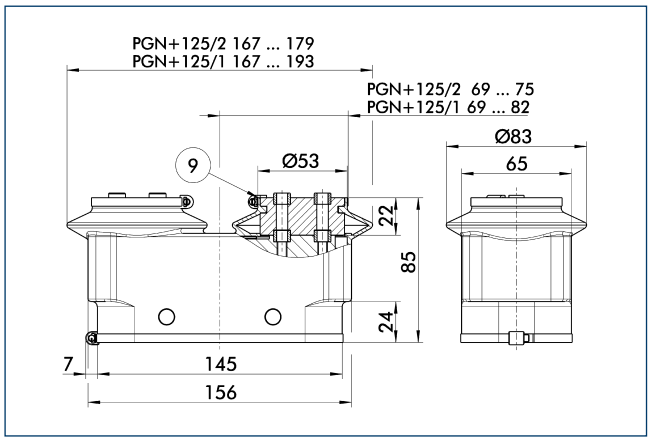

9 For mounting screw connection diagram, see basic version

The HUE protective cover completely protects the gripper against external influences up to IP65 if an additional sealing of the cover bottom is provided as part of the application. The mounting diagram shifts by the height of the intermediate jaw.

Description	ID	Cleanroom class ISO 14644-1	IP class
Protection cover			
HUE PGN-plus 125	0371483	2	65

BSWS jaw quick-change systems

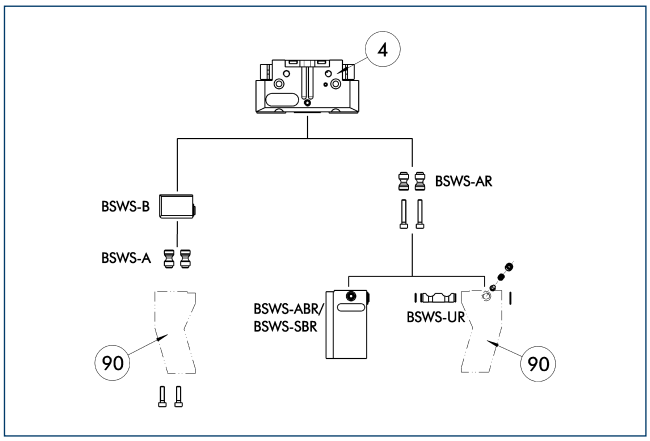

4 Gripper

90 Customized gripper fingers

There are various jaw quick-change systems available for the grippers. For detailed information, refer to the appropriate product.

Description	ID	
Jaw quick-change system adapter		
BSWS-AR 125	0300095	
BSWS-A 125	0303028	
Jaw quick-change system base		
BSWS-B 125	0303029	
Finger blanks with jaw quick-change system		
BSWS-ABR-PGZN-plus 125	0300075	
BSWS-SBR-PGZN-plus 125	0300085	
Jaw quick-change system reversed		
BSWS-UR 125	0302994	

ⓘ Only the systems listed in the table can be used.

ZBA L-plus 125 intermediate jaws

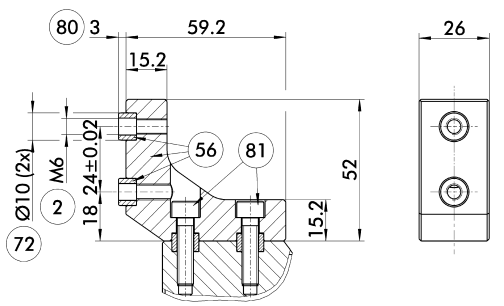

(2) Finger connection
(56) Included in delivery
(72) Fit for centering sleeves
(80) Depth of the centering sleeve hole in the mating part
(81) Not included in the scope of delivery

Optionally intermediate jaws can be used, enabling direct connection and alignment of top jaws and various standard accessories in Z-direction.

Description	ID	Material	Scope of delivery
Intermediate jaws			
ZBA-L-plus 125	0311752	Aluminum	1

UZB 125 universal intermediate jaw

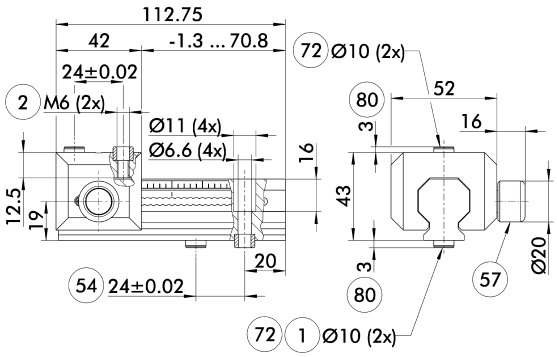

(1) Gripper connection
(2) Finger connection
(54) Optional right or left connection
(57) Locking
(72) Fit for centering sleeves
(80) Depth of the centering sleeve hole in the mating part

The universal intermediate jaw allows fast tool-free and reliable plugging and shifting of top jaws at the gripper.

Description	ID	Grid dimension [mm]
Universal intermediate jaw		
UZB 125	0300045	3
UZB-S 125	5518273	3
Finger blanks		
ABR-PGZN-plus 125	0300013	
SBR-PGZN-plus 125	0300023	

FMS-ZBA / ZBP 125 force-measuring jaws

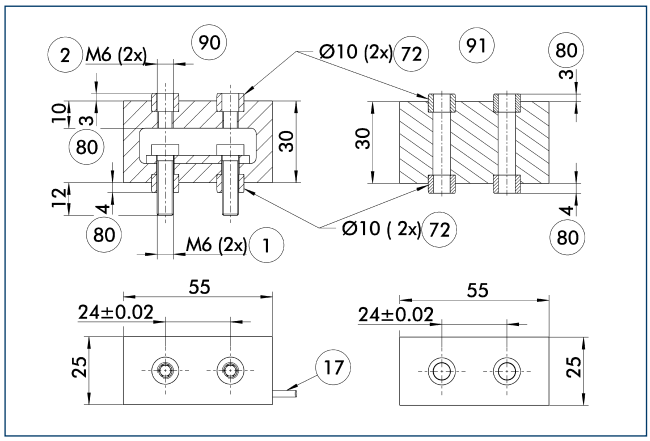

1 Gripper connection
2 Finger connection
17 Cable outlet
72 Fit for centering sleeves
80 Depth of the centering sleeve hole in the mating part
90 Active intermediate jaws
91 Passive intermediate jaws

Force measuring jaws measure gripping forces, but can also determine workpiece weights or dimensional deviations. There are active and passive intermediate jaws (FMS-ZBA or FMS-ZBP). At least one active force measuring jaw is required per gripper, the rest can be passive. For each active jaw, a FMS-A control unit and a FMS-AK connection cable are required.

Description	ID	Often combined
Active intermediate jaws		
FMS-ZBA 125	0301838	
Passive intermediate jaws		
FMS-ZBP 125	0301839	
Connection cables		
FMS-AK0200	0301820	●
FMS-AK0500	0301821	
FMS-AK1000	0301822	
FMS-AK2000	0301823	
Electronic processor		
FMS-A1	0301810	

ABR- / SBR-PGZN-plus 125 finger blanks

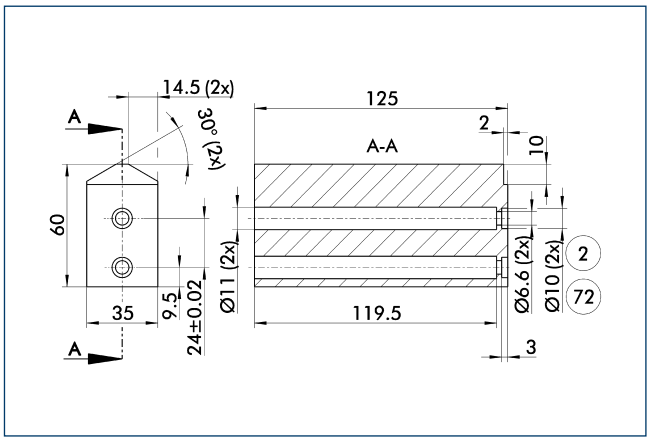

2 Finger connection
72 Fit for centering sleeves

Finger blanks for customized subsequent machining.

Description	ID	Material	Scope of delivery
Finger blanks			
ABR-PGZN-plus 125	0300013	Aluminum	1
SBR-PGZN-plus 125	0300023	16MnCr5	1

OAS-PGN-plus 125 object distance sensor

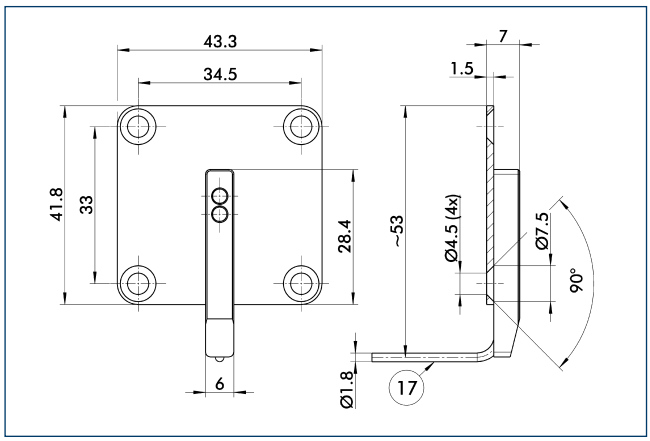

17 Cable outlet

Description	ID	
Object distance sensor		
OAS-PGN-plus 125	0308880	

Object distance sensor

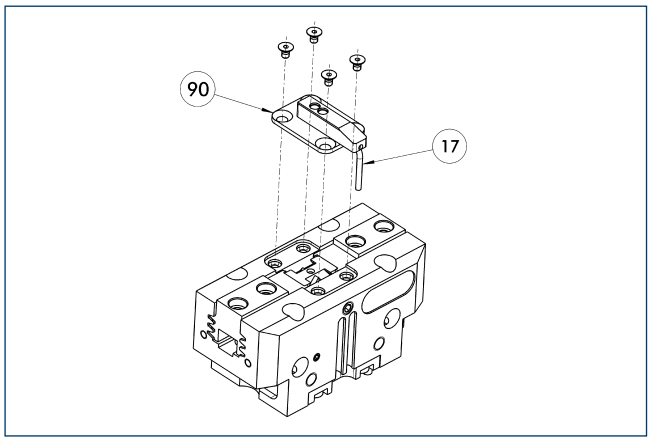

(17) Cable outlet
(90) OAS

Optical distance and presence sensor for direct mounting on the gripper. One OAS sensor per gripper can be assembled.

Description	ID	
Object distance sensor		
OAS-PGN-plus 125	0308880	
Electronic processor		
OAS-V09-D	0308865	
OAS-V10-A	0308867	
OAS-V10-D	0308866	

ⓘ The evaluation of the OAS can be done with either an analog or digital evaluation unit and with or without a display. The states which should be detected can be simply taught.

Attachment valves

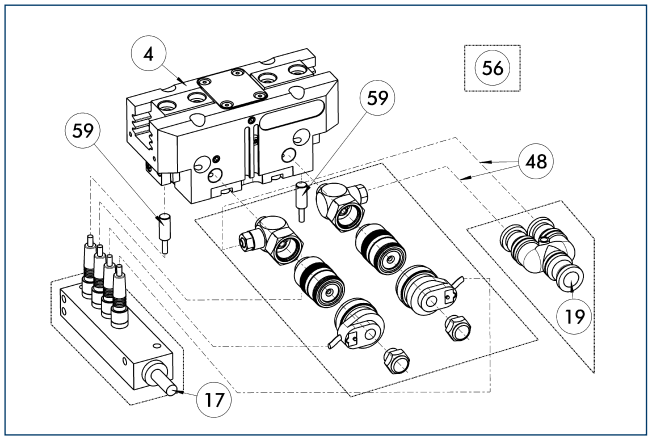

(4) Gripper
(17) Cable outlet
(19) Air connection
(48) Hose
(56) Included in delivery
(59) Monitoring gripping

For each unit one attachment valve ABV is required, optional with distributor for sensors and valves. Attachment valves increase the efficiency, reduce the installation work and air consumption and simplify air supply. For details please refer to the "Accessories" catalog section.

Description	ID	Often combined
Attachment valves		
ABV-MV30-G1/8	0303328	
ABV-MV30-G1/8-V2-M8	0303396	
ABV-MV30-G1/8-V4-M8	0303366	●
ABV-MV30-G1/8-V8-M8	0303367	

Modular assembly automation

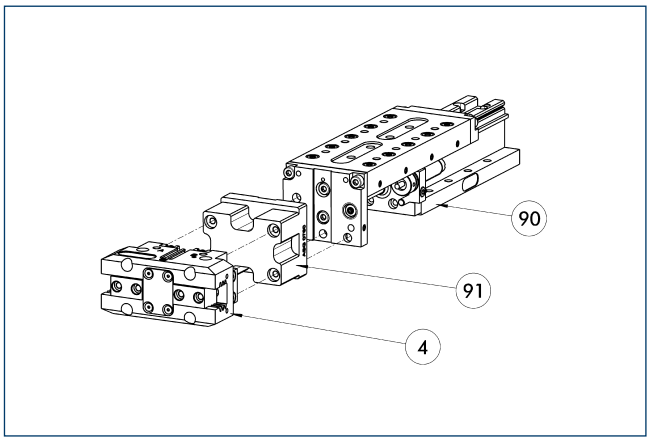

(4) Gripper
(90) CLM / KLM / LM / ELM / ELS / HLM linear module
(91) ASG adapter plate

Gripper and linear modules can be combined with standard adapters out of the modular assembly system. For more information see our catalog "Modular Assembly Automation".

Inductive proximity switches

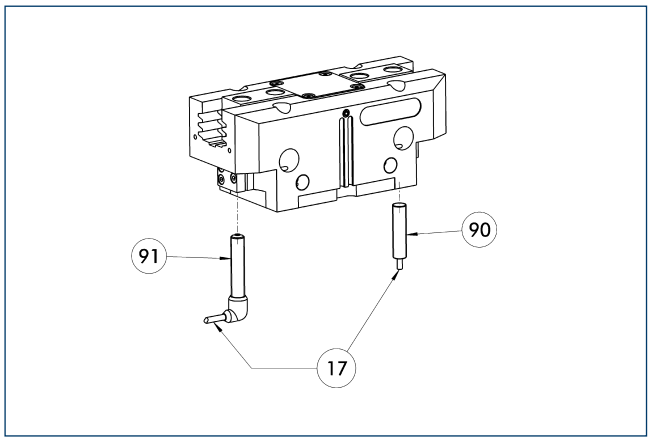

(17) Cable outlet
(91) IN ...-SA sensor
(90) IN ... sensor

Directly mounted limit position monitor.

Description	ID	Often combined
Inductive proximity switches		
IN 80-S-M12	0301578	
IN 80-S-M8	0301478	●
INK 80-S	0301550	
Inductive proximity switches with lateral outlet		
IN 80-S-M12-SA	0301587	
IN 80-S-M8-SA	0301483	●
INK 80-S-SA	0301566	
Cable extensions		
KV BG12-SG12 3P-0030-PNP	0301999	
KV BG12-SG12 3P-0060-PNP	0301998	
KV BW08-SG08 3P-0030-PNP	0301495	
KV BW08-SG08 3P-0100-PNP	0301496	
KV BW08-SG08 3P-0200-PNP	0301497	●
KV BW12-SG12 3P-0030-PNP	0301595	
KV BW12-SG12 3P-0100-PNP	0301596	
KV BW12-SG12 3P-0200-PNP	0301597	
Clip for plug / socket		
CLI-M12	0301464	
CLI-M8	0301463	
Connection cables		
KA BG08-L 3P-0300-PNP	0301622	●
KA BG08-L 3P-0500-PNP	0301623	
KA BG12-L 3P-0500-PNP	30016369	
KA BW08-L 3P-0300-PNP	0301594	
KA BW08-L 3P-0500-PNP	0301502	
KA BW12-L 3P-0300-PNP	0301503	
KA BW12-L 3P-0500-PNP	0301507	
Sensor distributor		
V2-M8	0301775	●
V2-M12	0301776	●
V4-M12	0301747	
V4-M8	0301746	

ⓘ Two sensors (closer/S) are required for each unit, plus extension cables as an option. Please note the minimum permitted bending radii for the sensor cables, which are generally 35 mm.

Flexible position sensor

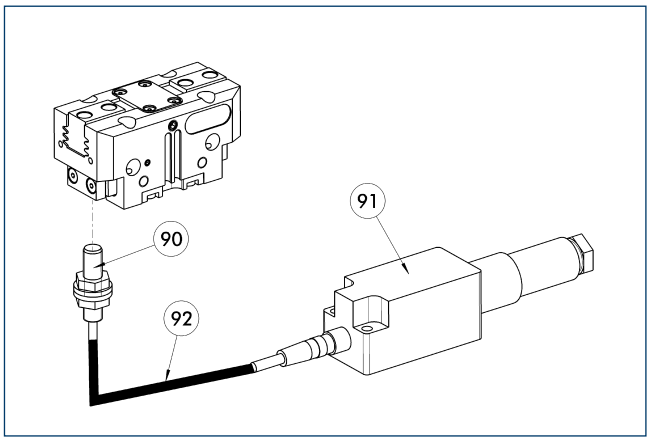

(90) FPS-S sensor
(91) FPS-F5 / -F5 T electronic processor
(92) Cable extensions

Flexible position monitoring of up to five positions.

Description	ID	Often combined
Mounting kit for FPS		
AS-FPS-PGZN-plus 125-1/PZB 160	0301636	
AS-FPS-PGZN-plus 125-2	0301637	
Electronic processor		
FPS-F5	0301805	●
FPS-F5 T	0301807	
Sensor		
FPS-S M8	0301704	
Clip for plug / socket		
CLI-M8	0301463	

ⓘ When using a FPS system, a FPS sensor (FPS-S) and a control unit (FPS-F5 / F5 T) are required for each gripper as well as a mounting kit (AS), if listed. Cable extensions (KV) are available as options in the "Accessories" catalog section.

MMS electronic magnetic switches

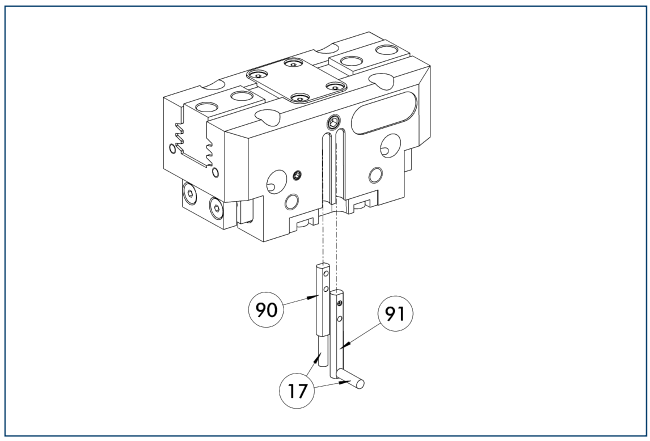

(17) Cable outlet
(91) MMS 22...-SA sensor
(90) MMS 22... sensor

End position monitoring for mounting in the C-slot.

Description	ID	Often combined
MMS electronic magnetic switches		
MMS 22-S-M8-PNP	0301032	●
MMSK 22-S-PNP	0301034	
MMS electronic magnetic switches with lateral cable outlet		
MMS 22-S-M8-PNP-SA	0301042	●
MMSK 22-S-PNP-SA	0301044	
Reed switches		
RMS 22-S-M8	0377720	●
Cable extensions		
KV BW08-SG08 3P-0030-PNP	0301495	
KV BW08-SG08 3P-0100-PNP	0301496	
KV BW08-SG08 3P-0200-PNP	0301497	●
Clip for plug / socket		
CLI-M8	0301463	
Connection cables		
KA BG08-L 3P-0300-PNP	0301622	●
KA BG08-L 3P-0500-PNP	0301623	
KA BW08-L 3P-0300-PNP	0301594	
KA BW08-L 3P-0500-PNP	0301502	
RSS radio sensor system		
RSS-T2	0377710	
Sensor distributor		
V2-M8	0301775	●
V4-M8	0301746	
V8-M8	0301751	

ⓘ Two sensors (closer/S) are required for each unit, plus extension cables as an option. Please note the minimum permitted bending radii for the sensor cables, which are generally 35 mm.

MMS PI1 programmable magnetic switches

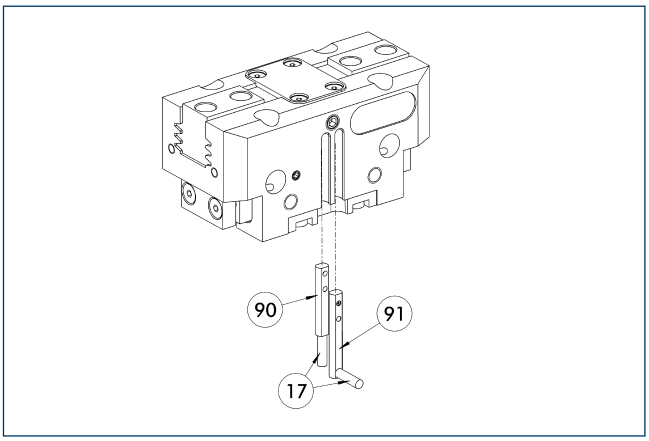

(17) Cable outlet
(91) MMS 22...-PI1-...-SA sensor
(90) MMS 22...-PI1-... sensor

Position query with one programmable position per sensor and electronics integrated in sensor. Programmable via MT magnet teaching tool (included in the scope of delivery) or ST plug teaching tool (optional). Limit position query mounted in C-groove. If the ST plug teaching tools are listed in the table, teaching can only take place with the ST plug teaching tools.

Description	ID	Often combined
MMS PI1 programmable magnetic switches		
MMS 22-PI1-S-M8-PNP	0301160	●
MMSK 22-PI1-S-PNP	0301162	
MMS PI1-HD programmable magnetic switches with stainless steel housing		
MMS 22-PI1-S-M8-PNP-HD	0301110	●
MMSK 22-PI1-S-PNP-HD	0301112	
MMS PI1 programmable magnetic switches with lateral cable outlet		
MMS 22-PI1-S-M8-PNP-SA	0301166	●
MMSK 22-PI1-S-PNP-SA	0301168	

ⓘ Two sensors (closer/S) are required for each unit, plus extension cables as an option. Please note the minimum permitted bending radii for the sensor cables, which are generally 35 mm. Connection cable, cable extensions, and sensor distributors can be found in the table for the MMS 22.

MMS PI2 programmable magnetic switches

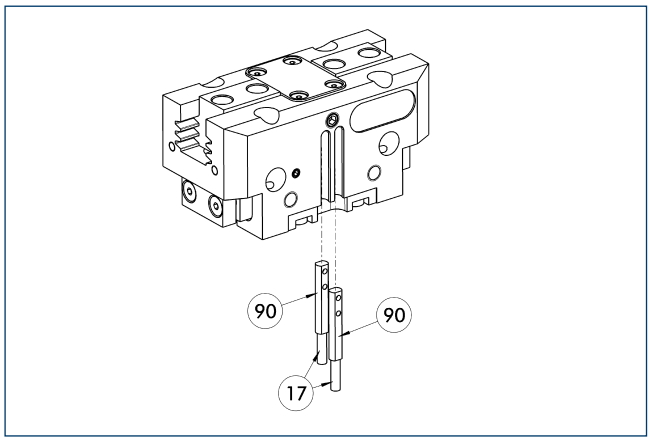

17 Cable outlet

90 MMS 22...-PI2-... sensor

Position query with two programmable positions per sensor and electronics integrated in sensor. Programmable via MT magnet teaching tool (included in the scope of delivery) or ST plug teaching tool (optional). Limit position query mounted in C-groove. If the ST plug teaching tools are listed in the table, teaching can only take place with the ST plug teaching tools.

Description	ID	Often combined
MMS PI2 programmable magnetic switches		
MMS 22-PI2-S-M8-PNP	0301180	●
MMSK 22-PI2-S-PNP	0301182	
MMS PI2-HD programmable magnetic switches with stainless steel housing		
MMS 22-PI2-S-M8-PNP-HD	0301130	●
MMSK 22-PI2-S-PNP-HD	0301132	

ⓘ Per unit one sensor (closer/S) is required, optionally a cable extension. Please note the minimum permitted bending radii for the sensor cables, which are generally 35 mm. Connection cable, cable extensions, and sensor distributors can be found in the table for the MMS-P 22.

MMS-P programmable magnetic switches

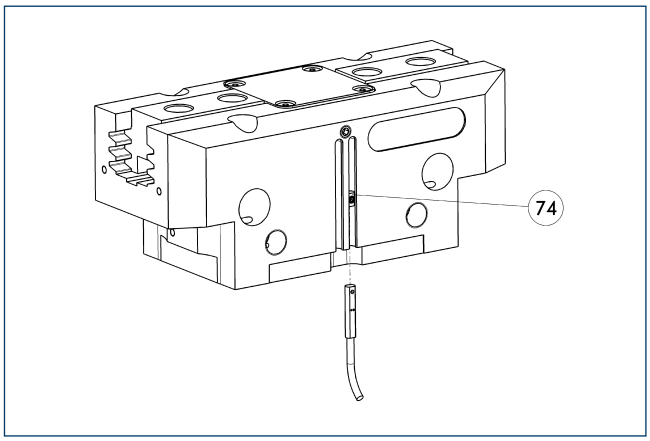

74 Stop for MMS-P

Position monitoring with two programmable positions per sensor. The end position monitoring is mounted in the C-slot.

Description	ID	Often combined
MMS-P programmable magnetic switches		
MMSK-P 22-S-PNP	0301371	
MMS-P 22-S-M8-PNP	0301370	●
Clip for plug / socket		
CLI-M8	0301463	
Connection cables		
KA BG08-L 4P-0500	0307767	●
KA BG08-L 4P-1000	0307768	
KA BW08-L 4P-0500	0307765	
KA BW08-L 4P-1000	0307766	
Sensor distributor		
V2-M8-4P-2XM8-3P	0301380	

ⓘ Per unit one sensor (closer/S) is required, optionally a cable extension. Please note the minimum permitted bending radii for the sensor cables, which are generally 35 mm.

APS-Z80 analog position sensor

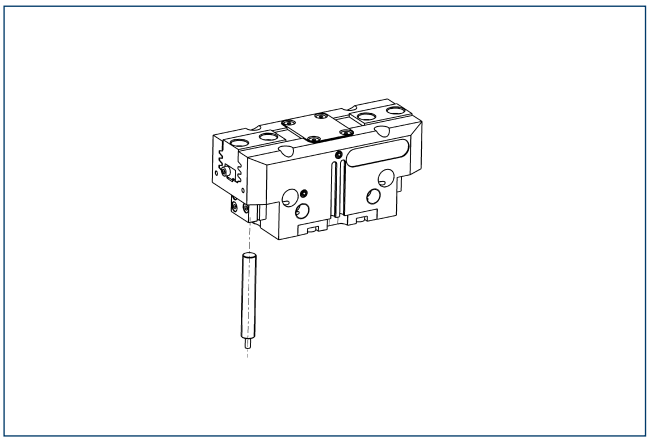

Contactlessly measuring, analog multi-position monitoring for any number of positions.

Description	ID	Often combined
Mounting kit for APS-Z80		
AS-APS-Z80-PGZN-plus 125-1	0302111	
AS-APS-Z80-PGZN-plus 125-2	0302112	
Sensor		
APS-Z80-K	0302072	
APS-Z80-M8	0302070	●

ⓘ When using an APS system, one mounting kit (AS-APS-Z80) and one APS-Z80 sensor is required per gripper.

MMS-A analog position sensor

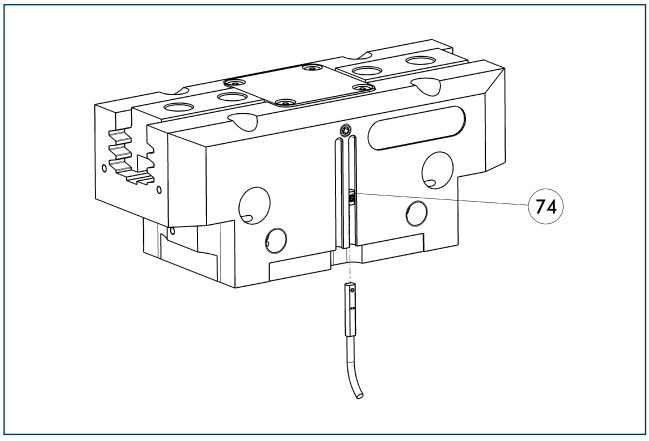

(74) Cable outlet

Contactlessly measuring, analog multi-position monitoring for any number of positions.

Description	ID	
Analog position sensor		
MMS 22-A-05V-M08	0315800	
MMS 22-A-10V-M08	0315820	

ⓘ One sensor is needed for each gripper. No additional mounting kit is needed – the standard gripper is equipped for use of the MMS-A.

APS-M1 analog position sensor

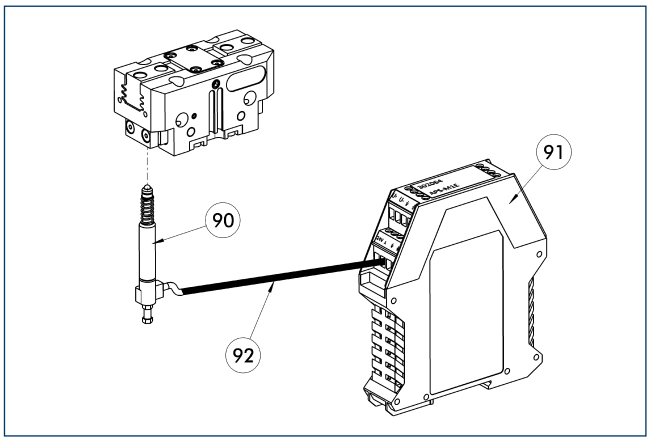

(90) APS-M1S sensor
(91) APS-M1E electronic processor
(92) APS-K extension cable

Analog multi position monitoring for any desired positions.

Description	ID	Often combined
Mounting kit for APS-M1		
AS-APS-M1-PGZN-plus 125-1	0302081	
AS-APS-M1-PGZN-plus 125-2	0302082	
Connection cables		
APS-K0200	0302066	●
APS-K0700	0302068	
Electronic processor		
APS-M1E	0302064	
Sensor		
APS-M1S	0302062	

ⓘ When using an APS system, for each gripper a mounting kit (AS-APS-M1), an APS-M1S sensor (incl. 3 m cable) as well as an electronics (APS-M1e) are required. An extension cable (APS-K) can be connected between the sensor and the electronics as an option. The max. cable length between the sensor and the electronics is 10 m, between the electronics and their control unit (PLC) it is max. 1 m.

Cylindrical reed switches

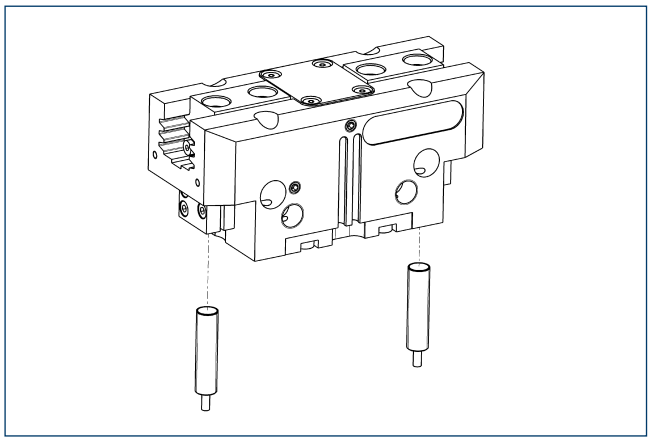

Limit position monitor can be mounted with mounting kit.

Description	ID	
Mounting kit for proximity switch		
AS-RMS 80 PGN/PZN-plus 100/125	0377726	
Reed switches		
RMS 80-S-M8	0377721	

ⓘ Two sensors (closer/S) are required for each unit, plus extension cables as an option. This mounting kit needs to be ordered optionally as an accessory. Two mounting kits are required per gripper. Please note the minimum permitted bending radii for the sensor cables, which are generally 35 mm.

PGN-plus 160

SCHUNK Grippers pneumatic | 2-Finger Parallel Grippers | Universal Gripper

Gripping force, O.D. gripping

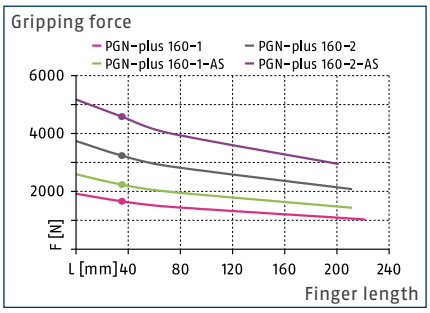

Gripping force, I.D. gripping

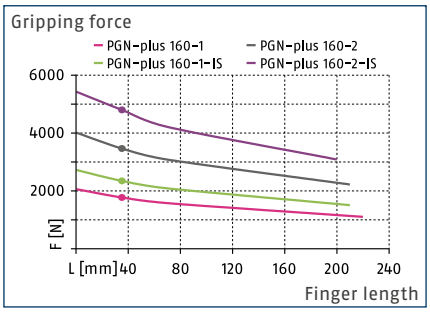

Finger load

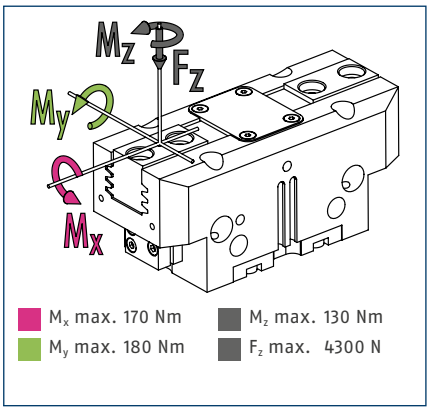

ⓘ The indicated moments and forces are static values, apply per base jaw and may occur simultaneously. M_y may arise in addition to the moment generated by the gripping force itself. If the max. permitted finger weight is exceeded, it is impreative to throttle the air supply so that the jaw movement occurs without any hitting or bouncing. Service life may be reduced.

Technical data

Description		PGN-plus 160-1	PGN-plus 160-2	PGN-plus 160-1-AS	PGN-plus 160-2-AS	PGN-plus 160-1-IS	PGN-plus 160-2-IS
ID		0371104	0371154	0371404	0371454	0371464	0371474
Stroke per jaw	[mm]	16	8	16	8	16	8
Closing- / opening force	[N]	1640/1770	3200/3460	2210/-	4420/-	-/2340	-/4680
min. spring force	[N]			570	1220	570	1220
Weight	[kg]	2.6	2.6	3.6	3.6	3.6	3.6
Recommended workpiece weight	[kg]	8.2	16	8.2	16	8.2	16
Fluid consumption per double stroke	[cm³]	164	164	210	210	265	265
min. / max. operating pressure	[bar]	2.5/8	2.5/8	4/6.5	4/6.5	4/6.5	4/6.5
Nominal operating pressure	[bar]	6	6	6	6	6	6
Closing- / opening time	[s]	0.15/0.15	0.15/0.15	0.12/0.25	0.12/0.25	0.25/0.12	0.25/0.12
Closing- / opening time only with spring	[s]			0.45	0.45	0.45	0.45
max. permitted finger length	[mm]	220	210	210	200	210	200
max. permitted weight per finger	[kg]	3.5	3.5	3.5	3.5	3.5	3.5
IP class		40	40	40	40	40	40
min. / max. ambient temperature	[°C]	5/90	5/90	5/90	5/90	5/90	5/90
Repeat accuracy	[mm]	0.01	0.01	0.01	0.01	0.01	0.01
Cleanroom class ISO 14644-1		5	5	5	5	5	5
Options and their characteristics							
Dust-tight version		37371104	37371154	37371404	37371454	37371464	37371474
IP class		64	64	64	64	64	64
Weight	[kg]	3	3	4	4	4	4
Anti-corrosion version		38371104	38371154	38371404	38371454	38371464	38371474
High-temperature version		39371104	39371154	39371404	39371454	39371464	39371474
min. / max. ambient temperature	[°C]	5/130	5/130	5/130	5/130	5/130	5/130
Force intensified version		0372104	0372154	0372404		0372464	
Closing- / opening force	[N]	2950/3185	5760/6230	3520/-		-/3755	
Weight	[kg]	3.4	3.4	4.4		4.4	
Maximum pressure	[bar]	6	6	6		6	
max. permitted finger length	[mm]	160	125	125		125	
Precision version		0371126	0371176	0371426	0371441		

ⓘ The full gripping force according to the data table is only realised after around 100 gripping cycles.

Main view

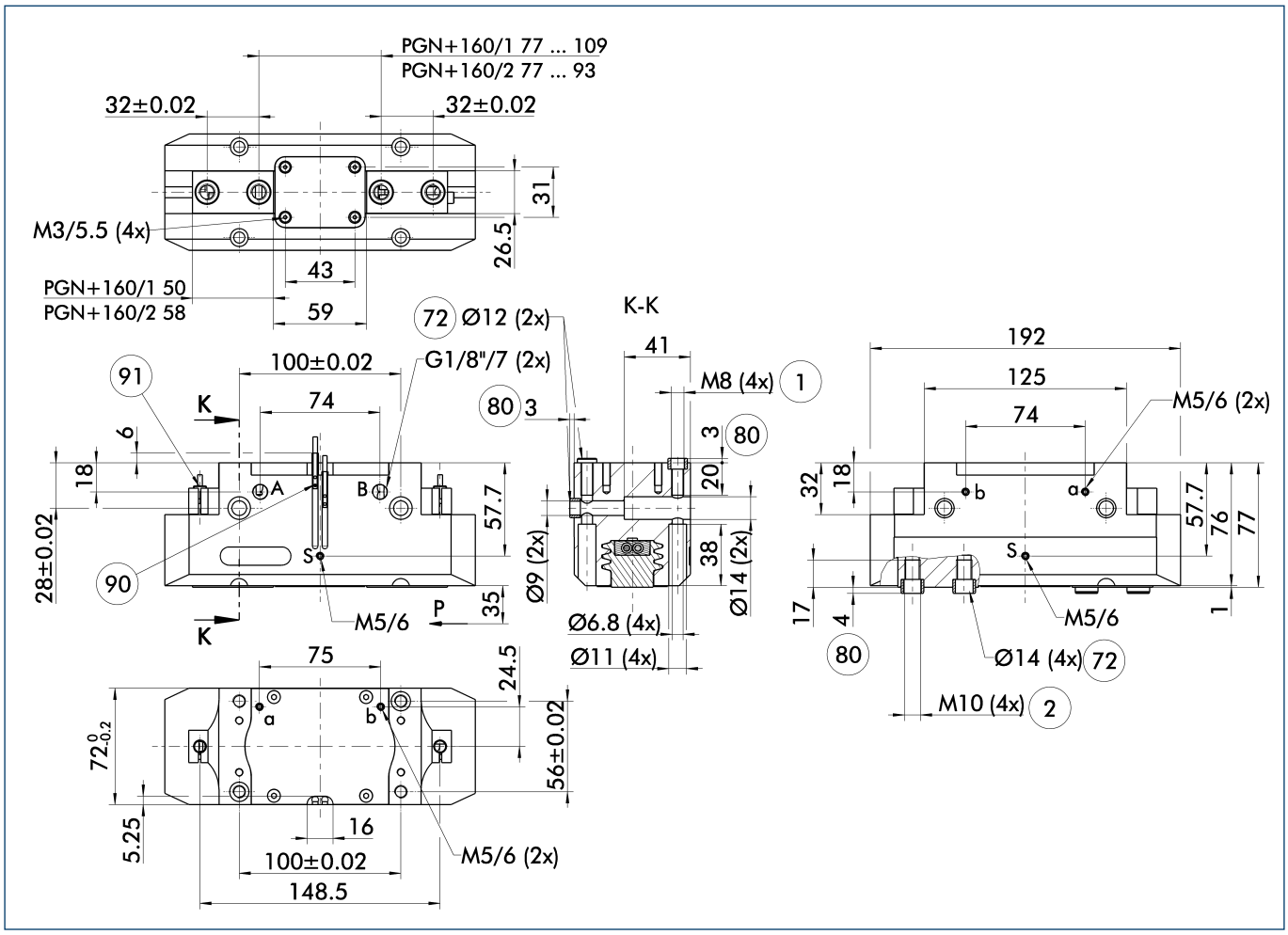

The drawing shows the gripper in the basic version with closed jaws, without dimensional consideration of the options described below.

ⓘ The SDV-P pressure maintenance valve can also be used for I.D. or O.D. gripping alternatively or in addition to the spring-loaded, mechanical gripping force maintenance device (see catalog section on "Accessories").

A, a Main / direct connection, gripper opening

B, b Main / direct connection, gripper closing

S Air purge connection (0.5 ... 1 bar)

(1) Gripper connection

(2) Finger connection

(72) Fit for centering sleeves

(80) Depth of the centering sleeve hole in the mating part

(90) MMS 22... sensor

(91) IN ... sensor

Maximum permitted finger projection

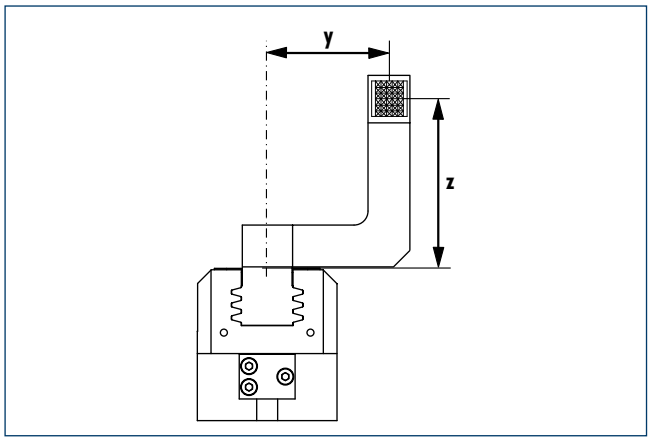

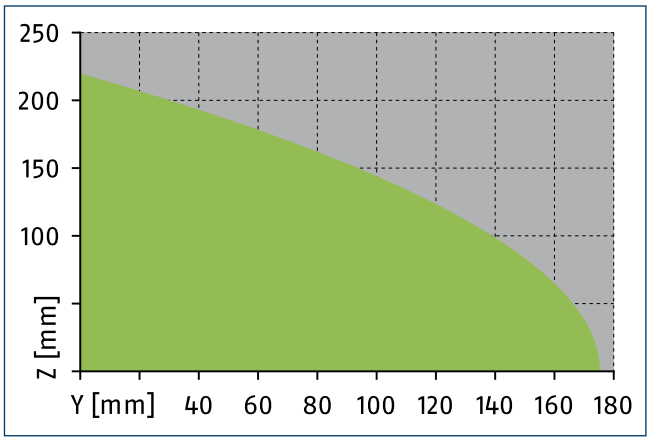

Permitted range

Inadmissible range

The curve applies for the base version (Stroke -1). For other versions, the curve must be offset in parallel corresponding to the max. permissible finger length.

Hose-free direct connection M5

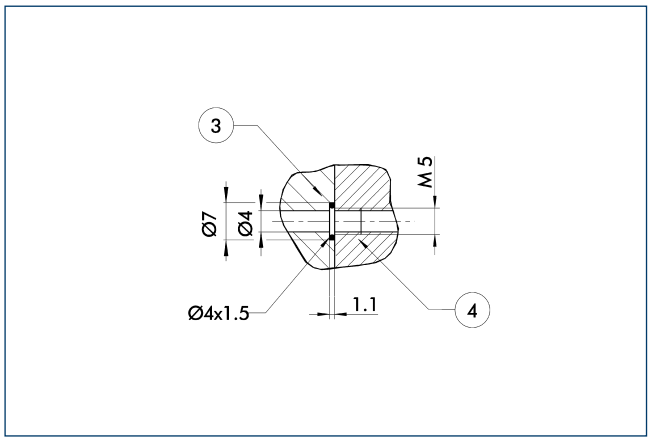

(3) Adapter (4) Gripper

The direct connection is used for supplying compressed air without hoses. Instead, the pressure medium is fed through bore-holes in the mounting plate.

Gripping force maintenance device AS / IS

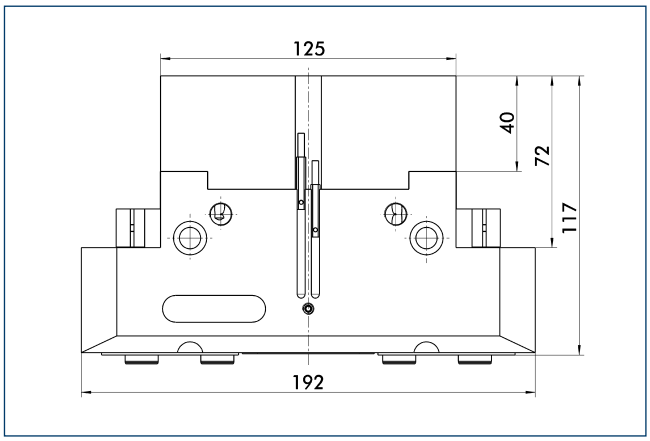

The mechanical maintenance of gripping force also assures a minimum gripping force in the case of a loss of pressure. With the AS / S variant, this acts as a closing force, and as an opening force for the IS variant. The maintenance of gripping force element can also be used as a means for increasing gripping force or for single actuated gripping.

Dust-tight version

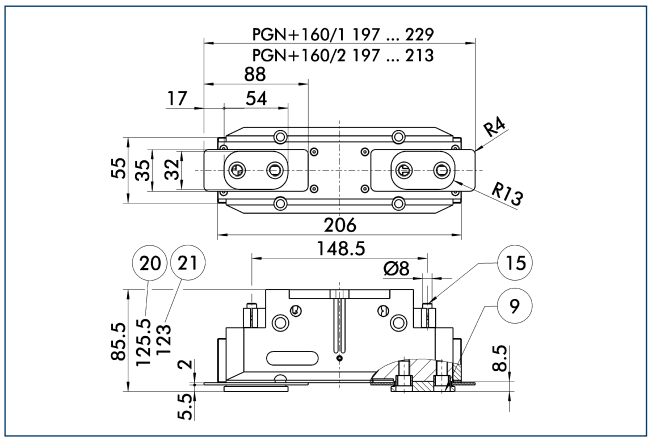

(9) For mounting screw connection diagram, see basic version
(15) Sealing bolt
(20) For AS / IS version
(21) For KVZ version

The "dust-protection" option increases the degree of protection against penetrating substances. The screw connection diagram shifts by the height of the intermediate jaw. The finger length is still measured from the upper edge of the gripper housing.

Force intensified version

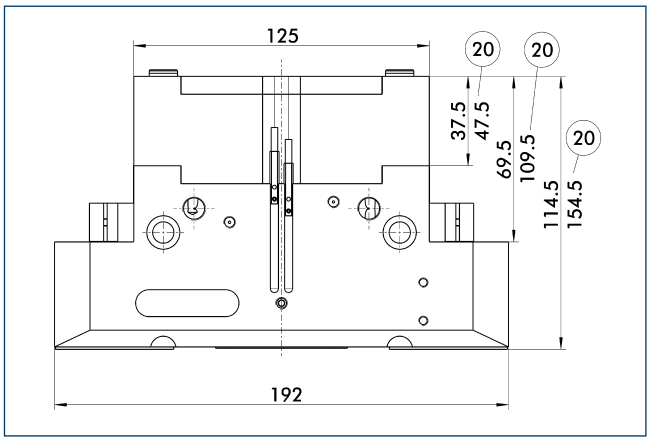

(20) For AS / IS version

The KVZ power booster cylinder increases gripping forces for opening and closing. A second piston connected in a series increases the force on the diagonal pull for this purpose. If applicable, observe the additional installation height for combination with an element for maintenance of gripping force.

Precision version

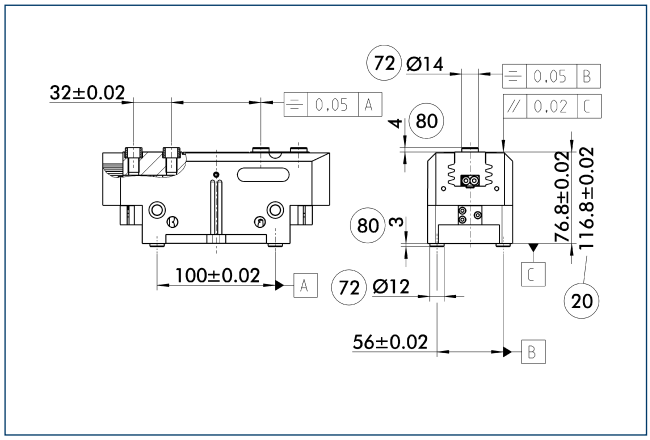

(20) For AS / IS version
(72) Fit for centering sleeves
(80) Depth of the centering sleeve hole in the mating part

The indicated tolerances just refer to the types of precision versions shown in the chart of technical specifications. All other types of precision versions are available on request.

SDV-P pressure maintenance valve

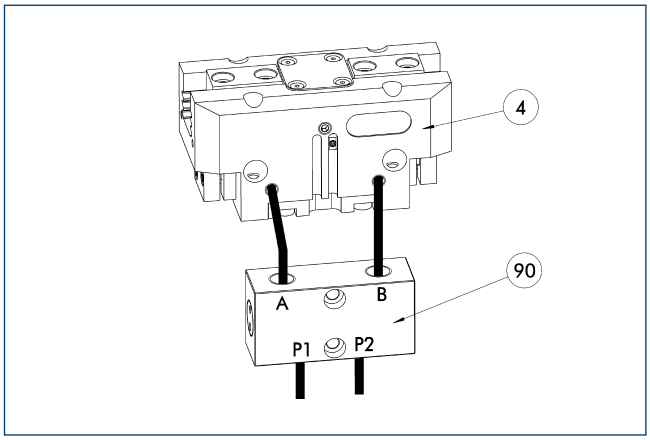

(4) Gripper
(90) SDV-P pressure maintenance valve

The SDV-P pressure maintenance valves ensure that the pressure in the piston chamber of pneumatic gripping, rotary, linear, and quick-change modules is maintained temporarily during an emergency stop.

Description	ID	
Pressure maintenance valve		
SDV-P 04	0403130	

HUE PGN-plus 160 protective cover

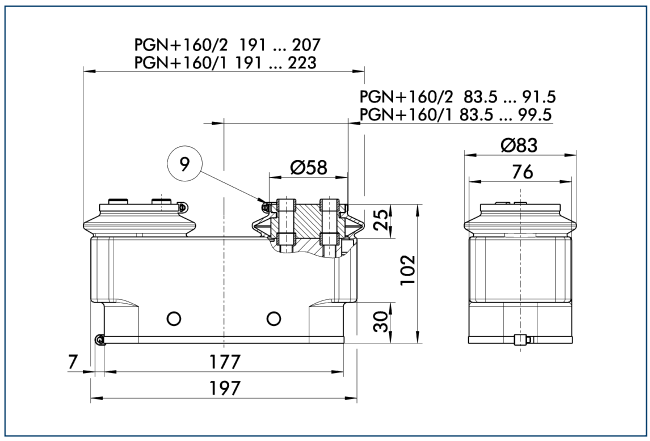

9 For mounting screw connection diagram, see basic version

The HUE protective cover completely protects the gripper against external influences up to IP65 if an additional sealing of the cover bottom is provided as part of the application. The mounting diagram shifts by the height of the intermediate jaw.

Description	ID	Cleanroom class ISO 14644-1	IP class
Protection cover			
HUE PGN-plus 160	0371484	2	65

BSWS jaw quick-change systems

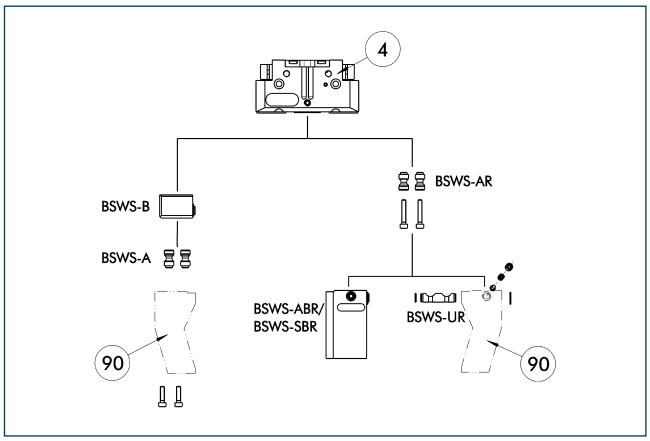

4 Gripper

90 Customized gripper fingers

There are various jaw quick-change systems available for the grippers. For detailed information, refer to the appropriate product.

Description	ID	
Jaw quick-change system adapter		
BSWS-AR 160	0300096	
BSWS-A 160	0303030	
Jaw quick-change system base		
BSWS-B 160	0303031	
Finger blanks with jaw quick-change system		
BSWS-ABR-PGZN-plus 160	0300076	
BSWS-SBR-PGZN-plus 160	0300086	
Jaw quick-change system reversed		
BSWS-UR 160	0302995	

ⓘ Only the systems listed in the table can be used.

ZBA L-plus 160 intermediate jaws

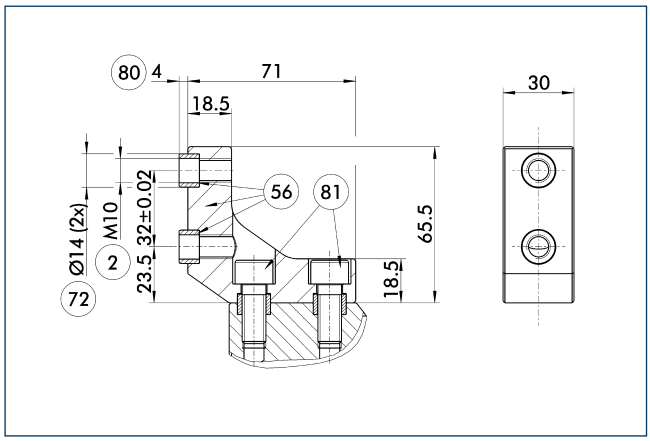

(2) Finger connection
(56) Included in delivery
(72) Fit for centering sleeves
(80) Depth of the centering sleeve hole in the mating part
(81) Not included in the scope of delivery

Optionally intermediate jaws can be used, enabling direct connection and alignment of top jaws and various standard accessories in Z-direction.

Description	ID	Material	Scope of delivery
Intermediate jaws			
ZBA-L-plus 160	0311762	Aluminum	1

UZB 160 universal intermediate jaw

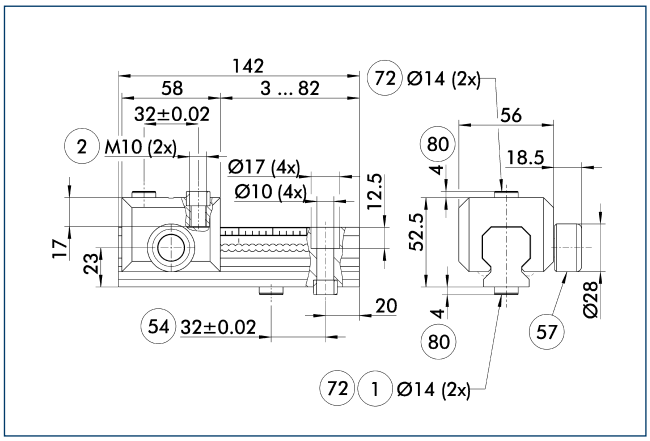

(1) Gripper connection
(2) Finger connection
(54) Optional right or left connection
(57) Locking
(72) Fit for centering sleeves
(80) Depth of the centering sleeve hole in the mating part

The universal intermediate jaw allows fast tool-free and reliable plugging and shifting of top jaws at the gripper.

Description	ID	Grid dimension [mm]
Universal intermediate jaw		
UZB 160	0300046	4
UZB-S 160	5518274	4
Finger blanks		
ABR-PGZN-plus 160	0300014	
SBR-PGZN-plus 160	0300024	

FMS-ZBA / ZBP 160 force-measuring jaws

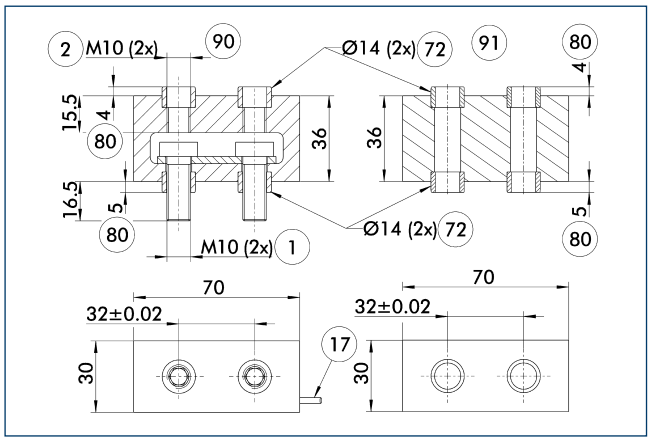

1 Gripper connection
2 Finger connection
17 Cable outlet
72 Fit for centering sleeves
80 Depth of the centering sleeve hole in the mating part
90 Active intermediate jaws
91 Passive intermediate jaws

Force measuring jaws measure gripping forces, but can also determine workpiece weights or dimensional deviations. There are active and passive intermediate jaws (FMS-ZBA or FMS-ZBP). At least one active force measuring jaw is required per gripper, the rest can be passive. For each active jaw, a FMS-A control unit and a FMS-AK connection cable are required.

Description	ID	Often combined
Active intermediate jaws		
FMS-ZBA 160	0301840	
Passive intermediate jaws		
FMS-ZBP 160	0301841	
Connection cables		
FMS-AK0200	0301820	●
FMS-AK0500	0301821	
FMS-AK1000	0301822	
FMS-AK2000	0301823	
Electronic processor		
FMS-A2	0301811	

ABR- / SBR-PGZN-plus 160 finger blanks

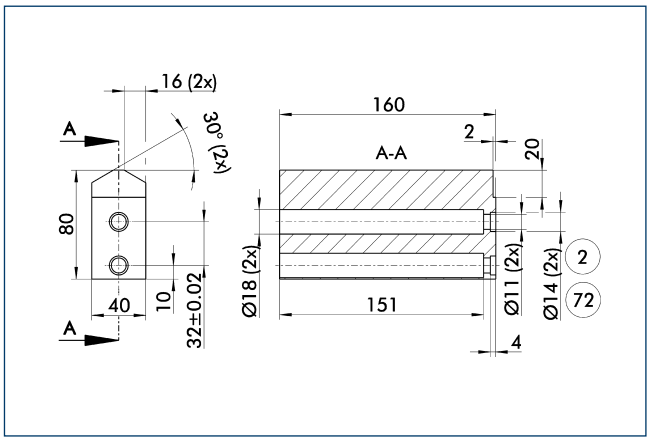

2 Finger connection
72 Fit for centering sleeves

Finger blanks for customized subsequent machining.

Description	ID	Material	Scope of delivery
Finger blanks			
ABR-PGZN-plus 160	0300014	Aluminum	1
SBR-PGZN-plus 160	0300024	16MnCr5	1

Attachment valves

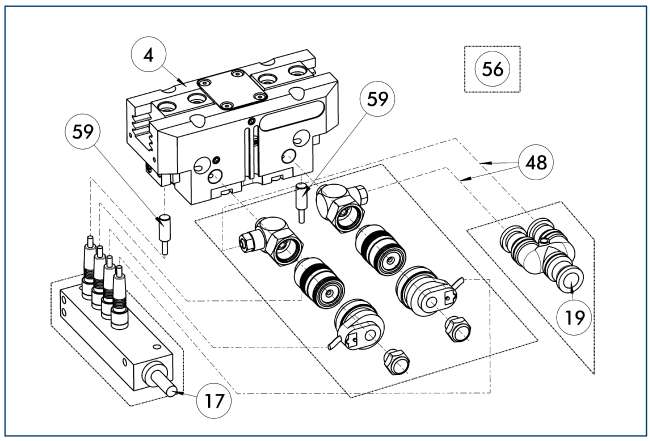

(4) Gripper
(17) Cable outlet
(19) Air connection
(48) Hose
(56) Included in delivery
(59) Monitoring gripping

For each unit one attachment valve ABV is required, optional with distributor for sensors and valves. Attachment valves increase the efficiency, reduce the installation work and air consumption and simplify air supply. For details please refer to the "Accessories" catalog section.

Description	ID	Often combined
Attachment valves		
ABV-MV30-G1/8	0303328	
ABV-MV30-G1/8-V2-M8	0303396	
ABV-MV30-G1/8-V4-M8	0303366	●
ABV-MV30-G1/8-V8-M8	0303367	

Inductive proximity switches

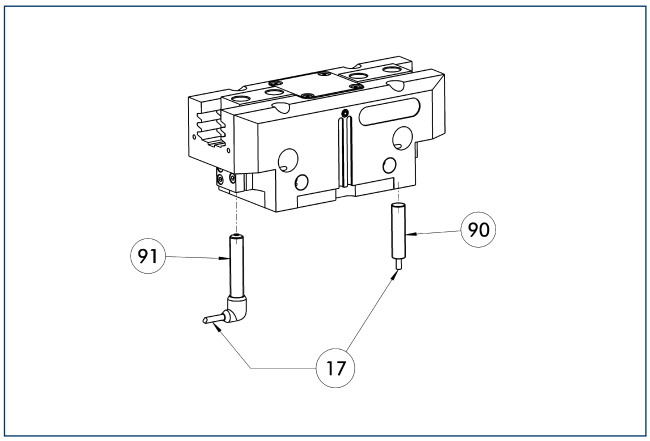

(17) Cable outlet
(90) IN ... sensor
(91) IN ...-SA sensor

Directly mounted limit position monitor.

Description	ID	Often combined
Inductive proximity switches		
IN 80-S-M12	0301578	
IN 80-S-M8	0301478	●
INK 80-S	0301550	
Inductive proximity switches with lateral outlet		
IN 80-S-M12-SA	0301587	
IN 80-S-M8-SA	0301483	●
INK 80-S-SA	0301566	
Cable extensions		
KV BG12-SG12 3P-0030-PNP	0301999	
KV BG12-SG12 3P-0060-PNP	0301998	
KV BW08-SG08 3P-0030-PNP	0301495	
KV BW08-SG08 3P-0100-PNP	0301496	
KV BW08-SG08 3P-0200-PNP	0301497	●
KV BW12-SG12 3P-0030-PNP	0301595	
KV BW12-SG12 3P-0100-PNP	0301596	
KV BW12-SG12 3P-0200-PNP	0301597	
Clip for plug / socket		
CLI-M12	0301464	
CLI-M8	0301463	
Connection cables		
KA BG08-L 3P-0300-PNP	0301622	●
KA BG08-L 3P-0500-PNP	0301623	
KA BG12-L 3P-0500-PNP	30016369	
KA BW08-L 3P-0300-PNP	0301594	
KA BW08-L 3P-0500-PNP	0301502	
KA BW12-L 3P-0300-PNP	0301503	
KA BW12-L 3P-0500-PNP	0301507	
Sensor distributor		
V2-M8	0301775	●
V2-M12	0301776	●
V4-M12	0301747	
V4-M8	0301746	

ⓘ Two sensors (closer/S) are required for each unit, plus extension cables as an option. Please note the minimum permitted bending radii for the sensor cables, which are generally 35 mm.

Flexible position sensor

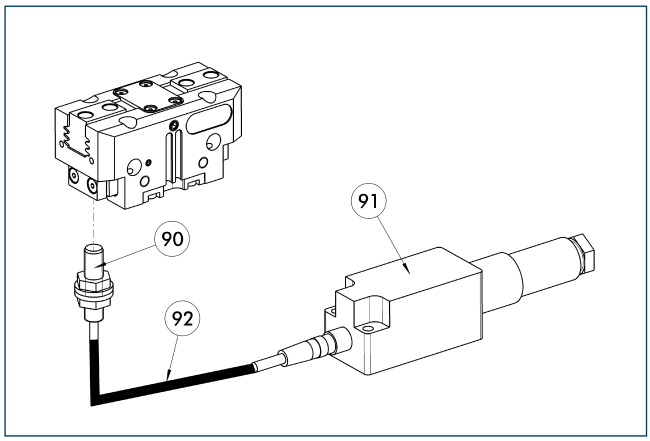

(90) FPS-S sensor
(91) FPS-F5 / -F5 T electronic processor
(92) Cable extensions

Flexible position monitoring of up to five positions.

Description	ID	Often combined
Mounting kit for FPS		
AS-FPS-PGZN-plus 160-1	0301638	
AS-FPS-PGZN-plus 160-2	0301639	
Electronic processor		
FPS-F5	0301805	●
FPS-F5 T	0301807	
Sensor		
FPS-S M8	0301704	
Clip for plug / socket		
CLI-M8	0301463	

ⓘ When using a FPS system, a FPS sensor (FPS-S) and a control unit (FPS-F5 / F5 T) are required for each gripper as well as a mounting kit (AS), if listed. Cable extensions (KV) are available as options in the "Accessories" catalog section.

MMS electronic magnetic switches

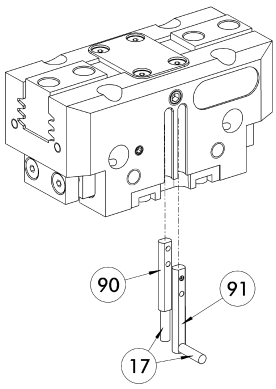

(17) Cable outlet
(90) MMS 22... sensor
(91) MMS 22...-SA sensor

End position monitoring for mounting in the C-slot.

Description	ID	Often combined
MMS electronic magnetic switches		
MMS 22-S-M8-PNP	0301032	●
MMSK 22-S-PNP	0301034	
MMS electronic magnetic switches with lateral cable outlet		
MMS 22-S-M8-PNP-SA	0301042	●
MMSK 22-S-PNP-SA	0301044	
Reed switches		
RMS 22-S-M8	0377720	●
Cable extensions		
KV BW08-SG08 3P-0030-PNP	0301495	
KV BW08-SG08 3P-0100-PNP	0301496	
KV BW08-SG08 3P-0200-PNP	0301497	●
Clip for plug / socket		
CLI-M8	0301463	
Connection cables		
KA BG08-L 3P-0300-PNP	0301622	●
KA BG08-L 3P-0500-PNP	0301623	
KA BW08-L 3P-0300-PNP	0301594	
KA BW08-L 3P-0500-PNP	0301502	
RSS radio sensor system		
RSS-T2	0377710	
Sensor distributor		
V2-M8	0301775	●
V4-M8	0301746	
V8-M8	0301751	

ⓘ Two sensors (closer/S) are required for each unit, plus extension cables as an option. Please note the minimum permitted bending radii for the sensor cables, which are generally 35 mm.

MMS PI1 programmable magnetic switches

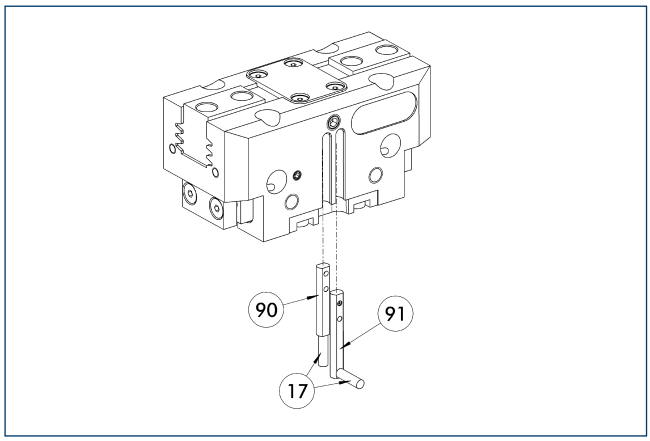

(17) Cable outlet
(91) MMS 22...-PI1-...-SA sensor
(90) MMS 22...-PI1-... sensor

Position query with one programmable position per sensor and electronics integrated in sensor. Programmable via MT magnet teaching tool (included in the scope of delivery) or ST plug teaching tool (optional). Limit position query mounted in C-groove. If the ST plug teaching tools are listed in the table, teaching can only take place with the ST plug teaching tools.

Description	ID	Often combined
MMS PI1 programmable magnetic switches		
MMS 22-PI1-S-M8-PNP	0301160	●
MMSK 22-PI1-S-PNP	0301162	
MMS PI1-HD programmable magnetic switches with stainless steel housing		
MMS 22-PI1-S-M8-PNP-HD	0301110	●
MMSK 22-PI1-S-PNP-HD	0301112	
MMS PI1 programmable magnetic switches with lateral cable outlet		
MMS 22-PI1-S-M8-PNP-SA	0301166	●
MMSK 22-PI1-S-PNP-SA	0301168	

ⓘ Two sensors (closer/S) are required for each unit, plus extension cables as an option. Please note the minimum permitted bending radii for the sensor cables, which are generally 35 mm. Connection cable, cable extensions, and sensor distributors can be found in the table for the MMS 22.

MMS PI2 programmable magnetic switches

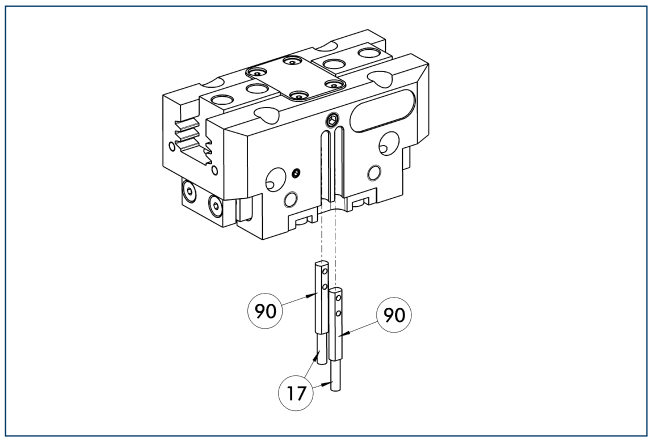

(17) Cable outlet
(90) MMS 22...-PI2-... sensor

Position query with two programmable positions per sensor and electronics integrated in sensor. Programmable via MT magnet teaching tool (included in the scope of delivery) or ST plug teaching tool (optional). Limit position query mounted in C-groove. If the ST plug teaching tools are listed in the table, teaching can only take place with the ST plug teaching tools.

Description	ID	Often combined
MMS PI2 programmable magnetic switches		
MMS 22-PI2-S-M8-PNP	0301180	●
MMSK 22-PI2-S-PNP	0301182	
MMS PI2-HD programmable magnetic switches with stainless steel housing		
MMS 22-PI2-S-M8-PNP-HD	0301130	●
MMSK 22-PI2-S-PNP-HD	0301132	

ⓘ Per unit one sensor (closer/S) is required, optionally a cable extension. Please note the minimum permitted bending radii for the sensor cables, which are generally 35 mm. Connection cable, cable extensions, and sensor distributors can be found in the table for the MMS-P 22.

MMS-P programmable magnetic switches

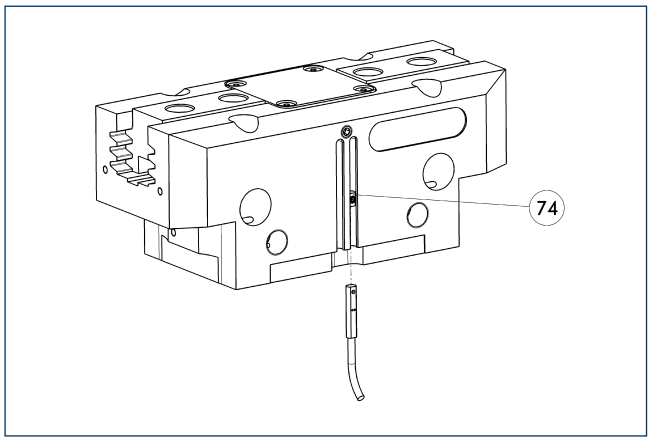

74 Stop for MMS-P

Position monitoring with two programmable positions per sensor. The end position monitoring is mounted in the C-slot.

Description	ID	Often combined
MMS-P programmable magnetic switches		
MMSK-P 22-S-PNP	0301371	
MMS-P 22-S-M8-PNP	0301370	●
Clip for plug / socket		
CLI-M8	0301463	
Connection cables		
KA BG08-L 4P-0500	0307767	●
KA BG08-L 4P-1000	0307768	
KA BW08-L 4P-0500	0307765	
KA BW08-L 4P-1000	0307766	
Sensor distributor		
V2-M8-4P-2XM8-3P	0301380	

ⓘ Per unit one sensor (closer/S) is required, optionally a cable extension. Please note the minimum permitted bending radii for the sensor cables, which are generally 35 mm.

APS-Z80 analog position sensor

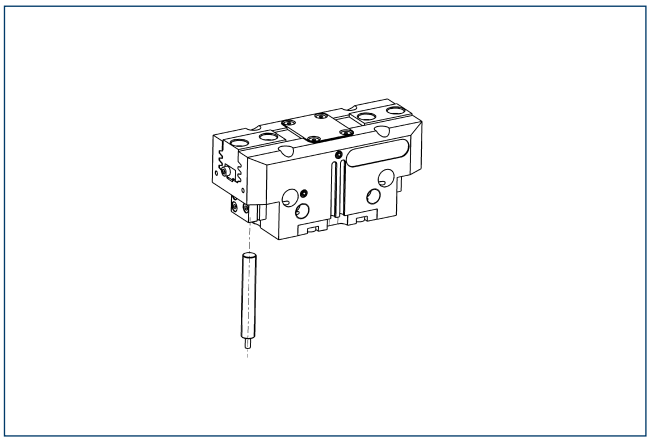

Contactlessly measuring, analog multi-position monitoring for any number of positions.

Description	ID	Often combined
Mounting kit for APS-Z80		
AS-APS-Z80-PGZN-plus 160-1/200-2/240-2	0302113	
AS-APS-Z80-PGZN-plus 160-2	0302114	
Sensor		
APS-Z80-K	0302072	
APS-Z80-M8	0302070	●

ⓘ When using an APS system, one mounting kit (AS-APS-Z80) and one APS-Z80 sensor is required per gripper.

APS-M1 analog position sensor

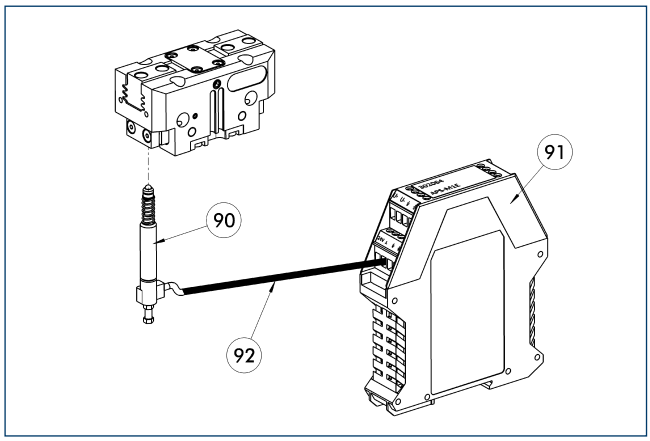

(90) APS-M1S sensor
(91) APS-M1E electronic processor
(92) APS-K extension cable

Analog multi position monitoring for any desired positions.

Description	ID	Often combined
Mounting kit for APS-M1		
AS-APS-M1-PGZN-plus 160-1/240-2	0302083	
AS-APS-M1-PGZN-plus 160-2	0302084	
Connection cables		
APS-K0200	0302066	●
APS-K0700	0302068	
Electronic processor		
APS-M1E	0302064	
Sensor		
APS-M1S	0302062	

ⓘ When using an APS system, for each gripper a mounting kit (AS-APS-M1), an APS-M1S sensor (incl. 3 m cable) as well as an electronics (APS-M1e) are required. An extension cable (APS-K) can be connected between the sensor and the electronics as an option. The max. cable length between the sensor and the electronics is 10 m, between the electronics and their control unit (PLC) it is max. 1 m.

Cylindrical reed switches

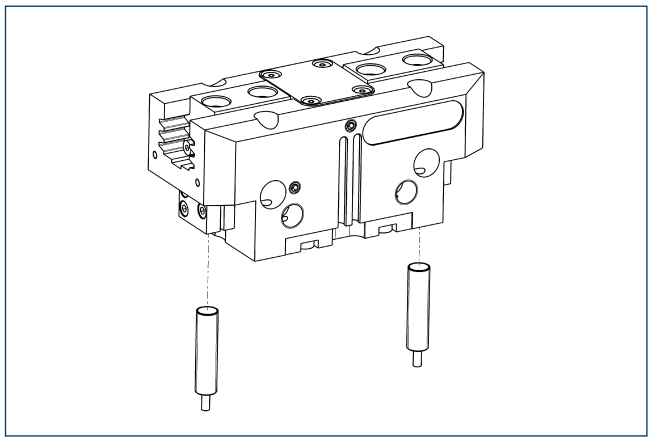

Limit position monitor can be mounted with mounting kit.

Description	ID	
Mounting kit for proximity switch		
AS-RMS 80 PGN/PZN-plus 160-380	0377727	
Reed switches		
RMS 80-S-M8	0377721	

ⓘ Two sensors (closer/S) are required for each unit, plus extension cables as an option. This mounting kit needs to be ordered optionally as an accessory. Two mounting kits are required per gripper. Please note the minimum permitted bending radii for the sensor cables, which are generally 35 mm.

PGN-plus 200

SCHUNK Grippers pneumatic | 2-Finger Parallel Grippers | Universal Gripper

Gripping force, O.D. gripping

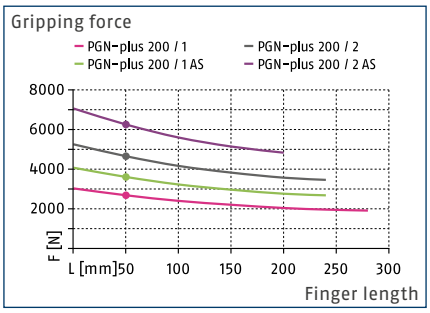

Gripping force, I.D. gripping

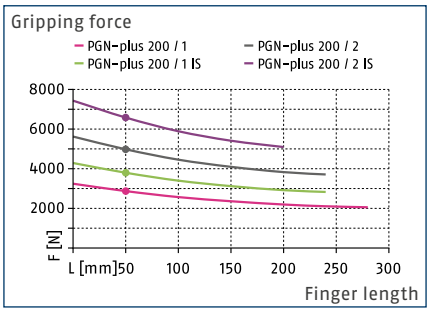

Finger load

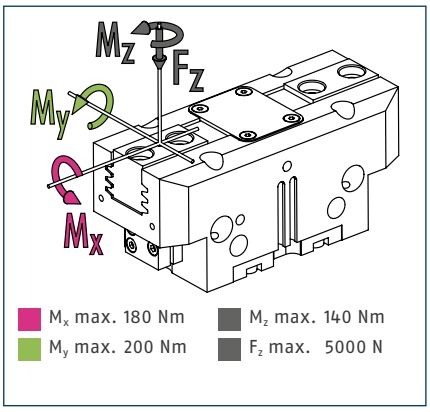

ⓘ The indicated moments and forces are static values, apply per base jaw and may occur simultaneously. M_y may arise in addition to the moment generated by the gripping force itself. If the max. permitted finger weight is exceeded, it is impreative to throttle the air supply so that the jaw movement occurs without any hitting or bouncing. Service life may be reduced.

Technical data

Description		PGN-plus 200-1	PGN-plus 200-2	PGN-plus 200-1-AS	PGN-plus 200-2-AS	PGN-plus 200-1-IS	PGN-plus 200-2-IS
ID		0371105	0371155	0371405	0371455	0371465	0371475
Stroke per jaw	[mm]	25	14	25	14	25	14
Closing- / opening force	[N]	2700/2870	4650/4980	3610/-	6250/-	-/3780	-/6580
min. spring force	[N]			910	1600	910	1600
Weight	[kg]	5.4	5.4	7.5	7.5	7.5	7.5
Recommended workpiece weight	[kg]	13.5	23.5	13.5	23.5	13.5	23.5
Fluid consumption per double stroke	[cm³]	385	385	495	495	620	620
min. / max. operating pressure	[bar]	2.5/8	2.5/8	4/6.5	4/6.5	4/6.5	4/6.5
Nominal operating pressure	[bar]	6	6	6	6	6	6
Closing- / opening time	[s]	0.35/0.35	0.35/0.35	0.3/0.6	0.3/0.6	0.6/0.3	0.6/0.3
Closing- / opening time only with spring	[s]			0.50	0.50	0.50	0.50
max. permitted finger length	[mm]	280	240	240	200	240	200
max. permitted weight per finger	[kg]	6.5	6.5	6.5	6.5	6.5	6.5
IP class		40	40	40	40	40	40
min. / max. ambient temperature	[°C]	5/90	5/90	5/90	5/90	5/90	5/90
Repeat accuracy	[mm]	0.02	0.02	0.02	0.02	0.02	0.02
Cleanroom class ISO 14644-1		5	5	5	5	5	5
Options and their characteristics							
Dust-tight version		37371105	37371155	37371405	37371455	37371465	37371475
IP class		64	64	64	64	64	64
Weight	[kg]	6	6	8.1	8.1	8.1	8.1
Anti-corrosion version		38371105	38371155	38371405	38371455	38371465	38371475
High-temperature version		39371105	39371155	39371405	39371455	39371465	39371475
min. / max. ambient temperature	[°C]	5/130	5/130	5/130	5/130	5/130	5/130
Force intensified version		0372105	0372155	0372405		0372465	
Closing- / opening force	[N]	4860/5165	8370/8965	5770/-		-/6075	
Weight	[kg]	6.7	6.7	9		9	
Maximum pressure	[bar]	6	6	6		6	
max. permitted finger length	[mm]	200	160	160		160	
Precision version		0371127	0371177	0371427	0371442		

ⓘ The full gripping force according to the data table is only realised after around 100 gripping cycles.

Main view

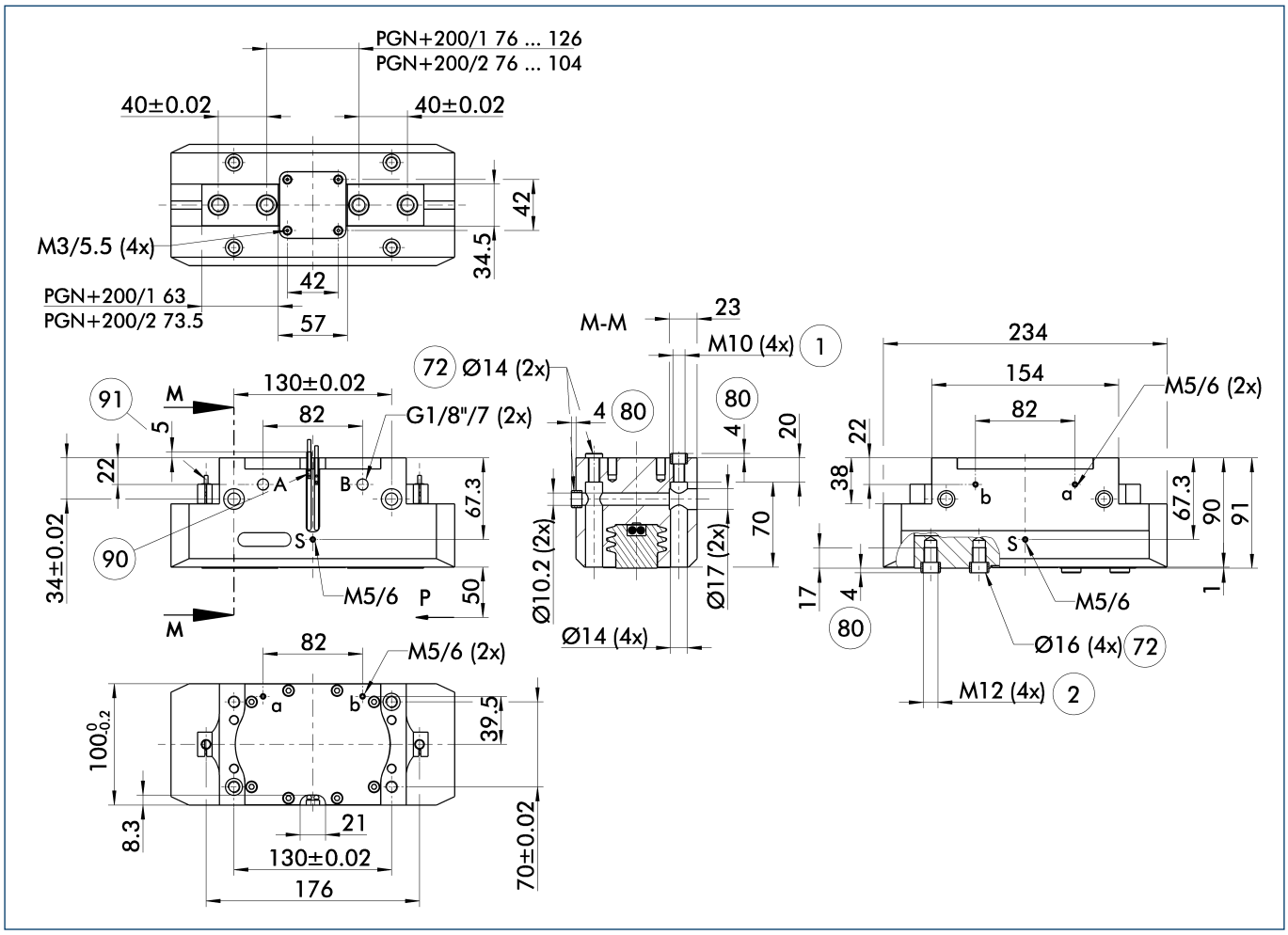

The drawing shows the gripper in the basic version with closed jaws, without dimensional consideration of the options described below.

ⓘ The SDV-P pressure maintenance valve can also be used for I.D. or O.D. gripping alternatively or in addition to the spring-loaded, mechanical gripping force maintenance device (see catalog section on "Accessories").

A, a Main / direct connection, gripper opening

B, b Main / direct connection, gripper closing

S Air purge connection (0.5 ... 1 bar)

(1) Gripper connection

(2) Finger connection

(72) Fit for centering sleeves

(80) Depth of the centering sleeve hole in the mating part

(90) MMS 22... sensor

(91) IN ... sensor

Maximum permitted finger projection

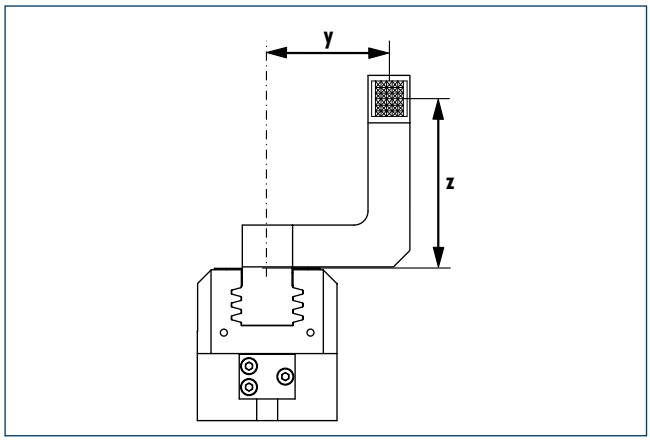

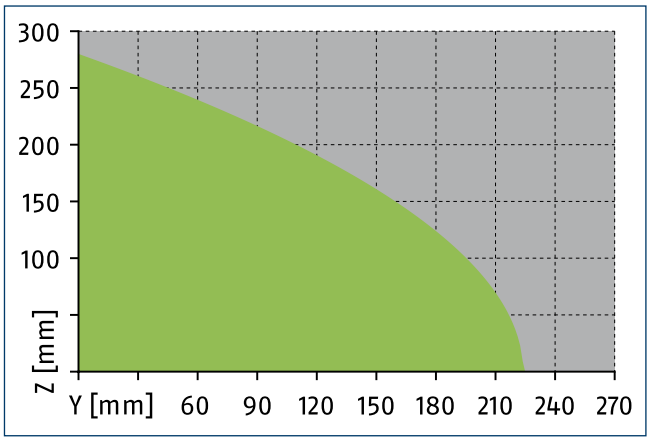

Permitted range

Inadmissible range

The curve applies for the base version (Stroke -1). For other versions, the curve must be offset in parallel corresponding to the max. permissible finger length.

Hose-free direct connection M5

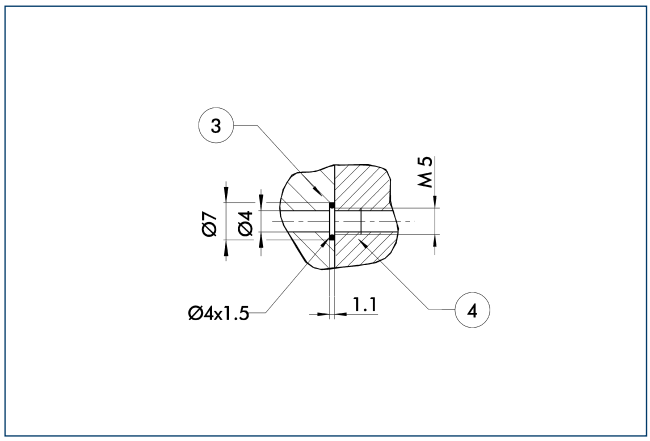

(3) Adapter (4) Gripper

The direct connection is used for supplying compressed air without hoses. Instead, the pressure medium is fed through bore-holes in the mounting plate.

Gripping force maintenance device AS / IS

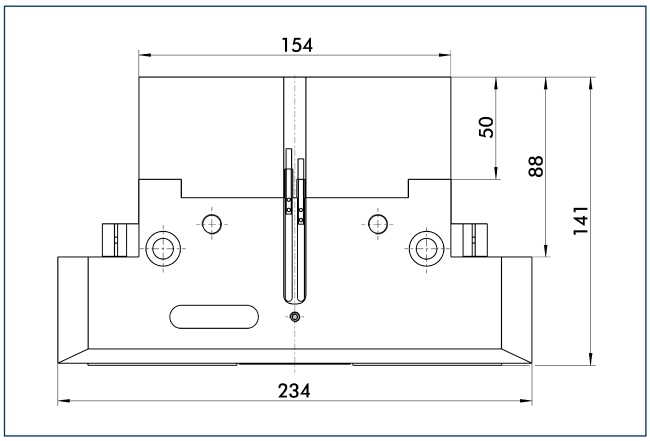

The mechanical maintenance of gripping force also assures a minimum gripping force in the case of a loss of pressure. With the AS / S variant, this acts as a closing force, and as an opening force for the IS variant. The maintenance of gripping force element can also be used as a means for increasing gripping force or for single actuated gripping.

Dust-tight version

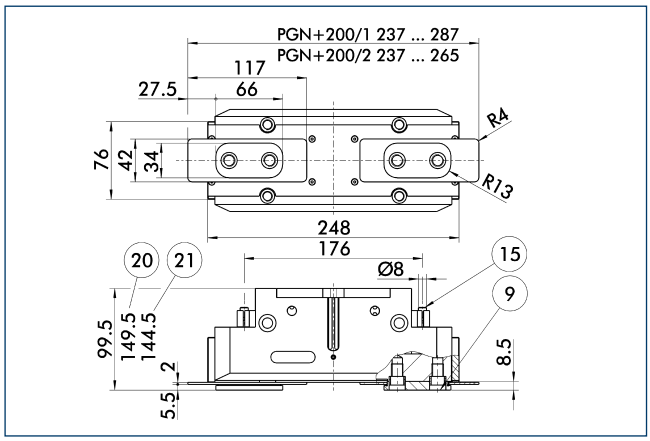

(9) For mounting screw connection diagram, see basic version
(15) Sealing bolt
(20) For AS / IS version
(21) For KVZ version

The "dust-protection" option increases the degree of protection against penetrating substances. The screw connection diagram shifts by the height of the intermediate jaw. The finger length is still measured from the upper edge of the gripper housing.

Force intensified version

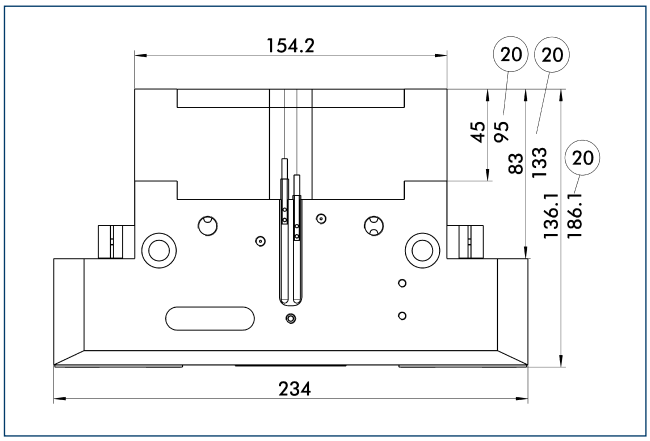

(20) For AS / IS version

The KVZ power booster cylinder increases gripping forces for opening and closing. A second piston connected in a series increases the force on the diagonal pull for this purpose. If applicable, observe the additional installation height for combination with an element for maintenance of gripping force.

Precision version

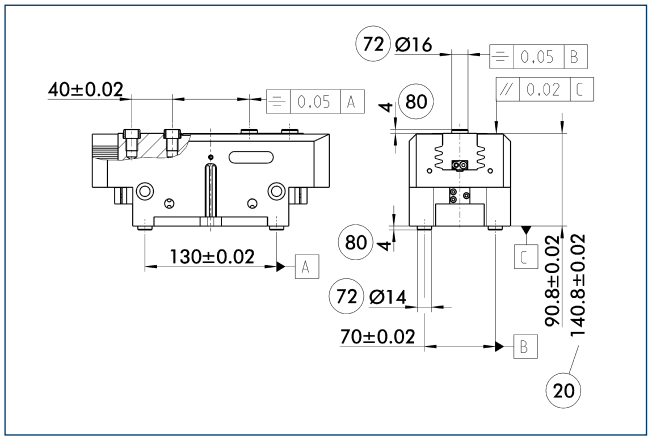

(20) For AS / IS version
(72) Fit for centering sleeves
(80) Depth of the centering sleeve hole in the mating part

The indicated tolerances just refer to the types of precision versions shown in the chart of technical specifications. All other types of precision versions are available on request.

SDV-P pressure maintenance valve

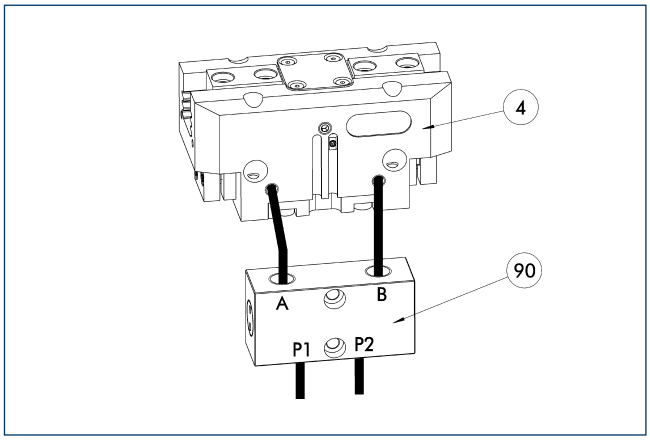

(4) Gripper
(90) SDV-P pressure maintenance valve

The SDV-P pressure maintenance valves ensure that the pressure in the piston chamber of pneumatic gripping, rotary, linear, and quick-change modules is maintained temporarily during an emergency stop.

Description	ID	
Pressure maintenance valve		
SDV-P 04	0403130	

BSWS jaw quick-change systems

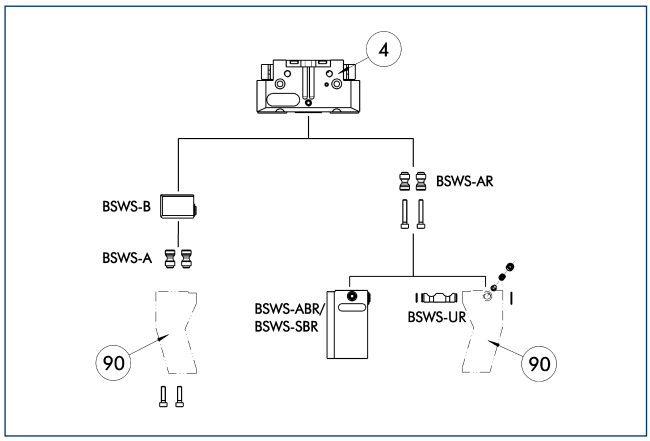

(4) Gripper

(90) Customized gripper fingers

Different jaw quick-change systems are available for this gripper. For more detailed information please see the relevant product chapters in the catalog.

Description	ID	
Jaw quick-change system base		
BSWS-B 200	0303033	
Jaw quick-change system adapter		
BSWS-A 200	0303032	

ⓘ Only the systems listed in the table can be used.

ZBA L-plus 200 intermediate jaws

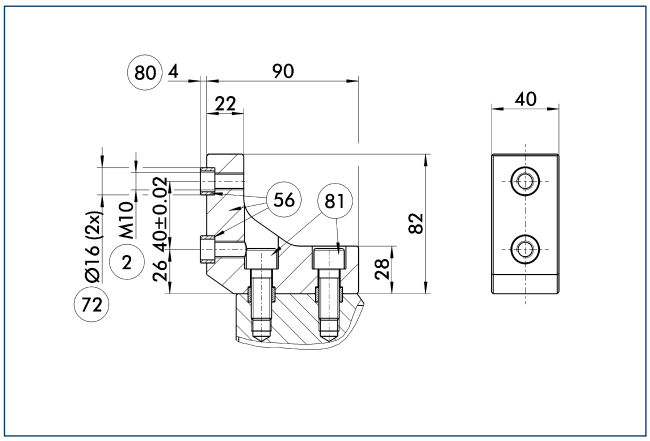

(2) Finger connection

(56) Included in delivery

(72) Fit for centering sleeves

(80) Depth of the centering sleeve hole in the mating part

(81) Not included in the scope of delivery

Optionally intermediate jaws can be used, enabling direct connection and alignment of top jaws and various standard accessories in Z-direction.

Description	ID	Material	Scope of delivery
Intermediate jaws			
ZBA-L-plus 200	0311772	Aluminum	1

UZB 200 universal intermediate jaw

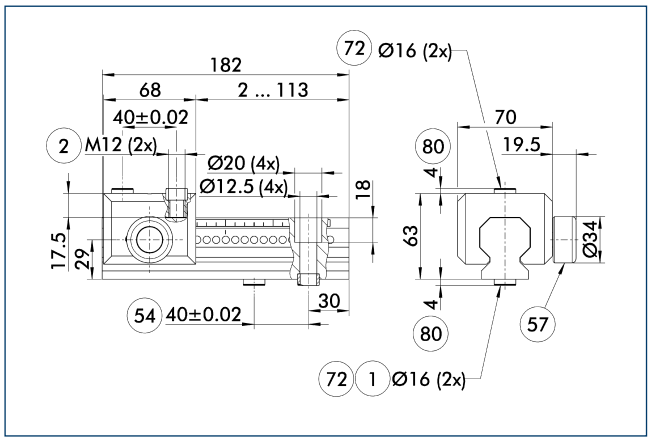

1 Gripper connection
2 Finger connection
54 Optional right or left connection
57 Locking
72 Fit for centering sleeves
80 Depth of the centering sleeve hole in the mating part

The universal intermediate jaw allows fast tool-free and reliable plugging and shifting of top jaws at the gripper.

Description	ID	Grid dimension [mm]
Universal intermediate jaw		
UZB 200	0300047	7
UZB-S 200	5518275	7
Finger blanks		
ABR-PGZN-plus 200	0300015	
SBR-PGZN-plus 200	0300025	

FMS-ZBA / ZBP 200 force-measuring jaws

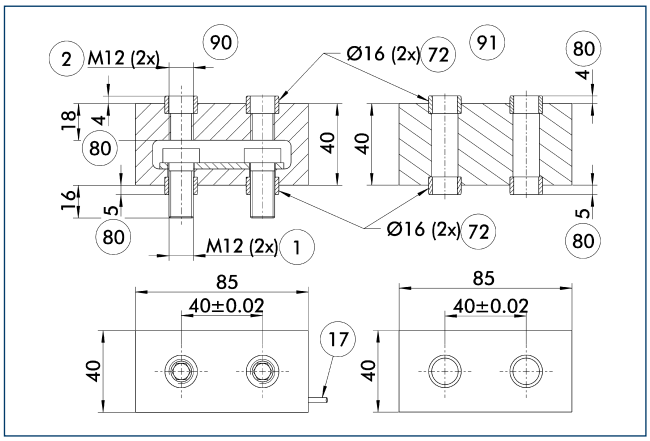

1 Gripper connection
2 Finger connection
17 Cable outlet
72 Fit for centering sleeves
80 Depth of the centering sleeve hole in the mating part
90 Active intermediate jaws
91 Passive intermediate jaws

Force measuring jaws measure gripping forces, but can also determine workpiece weights or dimensional deviations. There are active and passive intermediate jaws (FMS-ZBA or FMS-ZBP). At least one active force measuring jaw is required per gripper, the rest can be passive. For each active jaw, a FMS-A control unit and a FMS-AK connection cable are required.

Description	ID	Often combined
Active intermediate jaws		
FMS-ZBA 200	0301842	
Passive intermediate jaws		
FMS-ZBP 200	0301843	
Connection cables		
FMS-AK0200	0301820	●
FMS-AK0500	0301821	
FMS-AK1000	0301822	
FMS-AK2000	0301823	
Electronic processor		
FMS-A2	0301811	

ABR- / SBR-PGZN-plus 200 finger blanks

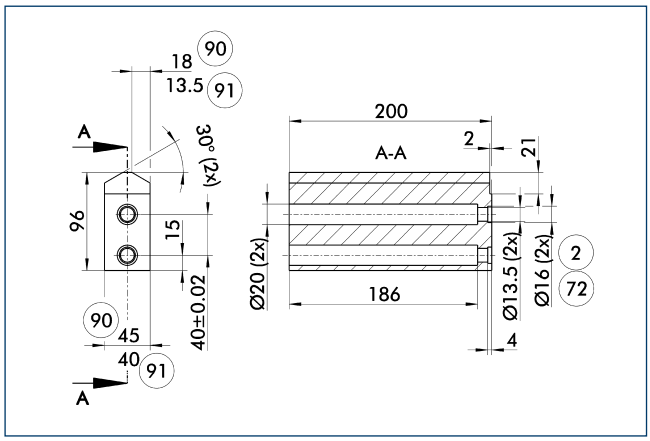

(2) Finger connection
(72) Fit for centering sleeves
(90) ABR-PGZN-plus
(91) SBR-PGZN-plus

Finger blanks for customized subsequent machining.

Description	ID	Material	Scope of delivery
Finger blanks			
ABR-PGZN-plus 200	0300015	Aluminum	1
SBR-PGZN-plus 200	0300025	16MnCr5	1

Inductive proximity switches

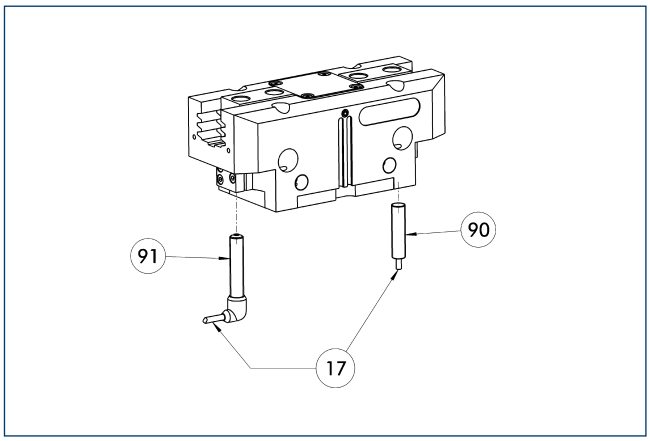

(17) Cable outlet
(90) IN ... sensor
(91) IN ...-SA sensor

Directly mounted limit position monitor.

Description	ID	Often combined
Inductive proximity switches		
IN 80-S-M12	0301578	
IN 80-S-M8	0301478	●
INK 80-S	0301550	
Inductive proximity switches with lateral outlet		
IN 80-S-M12-SA	0301587	
IN 80-S-M8-SA	0301483	●
INK 80-S-SA	0301566	
Cable extensions		
KV BG12-SG12 3P-0030-PNP	0301999	
KV BG12-SG12 3P-0060-PNP	0301998	
KV BW08-SG08 3P-0030-PNP	0301495	
KV BW08-SG08 3P-0100-PNP	0301496	
KV BW08-SG08 3P-0200-PNP	0301497	●
KV BW12-SG12 3P-0030-PNP	0301595	
KV BW12-SG12 3P-0100-PNP	0301596	
KV BW12-SG12 3P-0200-PNP	0301597	
Clip for plug / socket		
CLI-M12	0301464	
CLI-M8	0301463	
Connection cables		
KA BG08-L 3P-0300-PNP	0301622	●
KA BG08-L 3P-0500-PNP	0301623	
KA BG12-L 3P-0500-PNP	30016369	
KA BW08-L 3P-0300-PNP	0301594	
KA BW08-L 3P-0500-PNP	0301502	
KA BW12-L 3P-0300-PNP	0301503	
KA BW12-L 3P-0500-PNP	0301507	
Sensor distributor		
V2-M8	0301775	●
V2-M12	0301776	●
V4-M12	0301747	
V4-M8	0301746	

ⓘ Two sensors (closer/S) are required for each unit, plus extension cables as an option. Please note the minimum permitted bending radii for the sensor cables, which are generally 35 mm.

Flexible position sensor

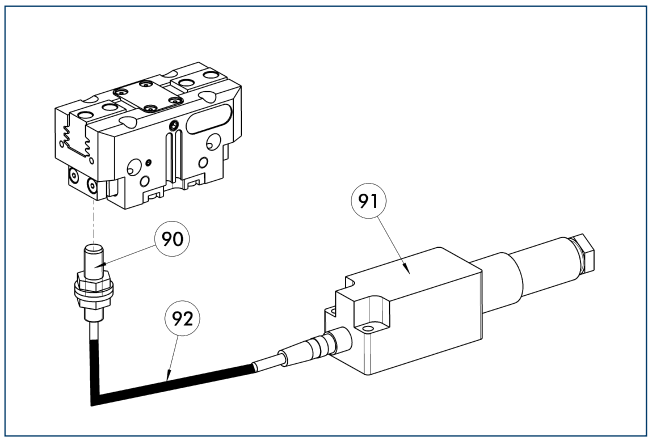

(90) FPS-S sensor
(91) FPS-F5 / -F5 T electronic processor
(92) Cable extensions

Flexible position monitoring of up to five positions.

Description	ID	Often combined
Mounting kit for FPS		
AS-FPS-PGZN-plus 200-1	0301640	
AS-FPS-PGZN-plus 200-2	0301641	
Electronic processor		
FPS-F5	0301805	●
FPS-F5 T	0301807	
Sensor		
FPS-S M8	0301704	
Clip for plug / socket		
CLI-M8	0301463	

ⓘ When using a FPS system, a FPS sensor (FPS-S) and a control unit (FPS-F5 / F5 T) are required for each gripper as well as a mounting kit (AS), if listed. Cable extensions (KV) are available as options in the "Accessories" catalog section.

MMS electronic magnetic switches

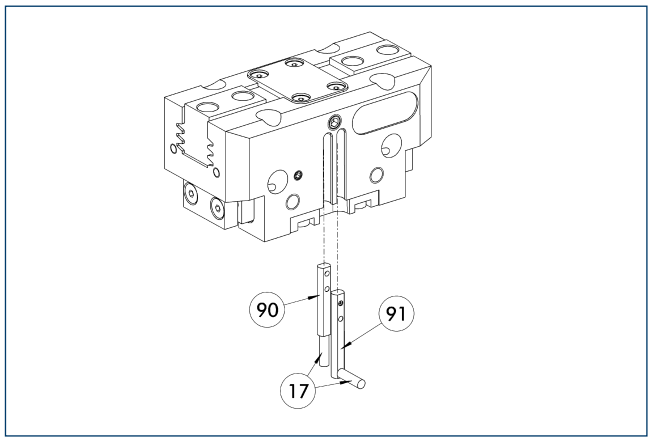

(17) Cable outlet
(90) MMS 22... sensor
(91) MMS 22...-SA sensor

End position monitoring for mounting in the C-slot.

Description	ID	Often combined
MMS electronic magnetic switches		
MMS 22-S-M8-PNP	0301032	●
MMSK 22-S-PNP	0301034	
MMS electronic magnetic switches with lateral cable outlet		
MMS 22-S-M8-PNP-SA	0301042	●
MMSK 22-S-PNP-SA	0301044	
Reed switches		
RMS 22-S-M8	0377720	●
Cable extensions		
KV BW08-SG08 3P-0030-PNP	0301495	
KV BW08-SG08 3P-0100-PNP	0301496	
KV BW08-SG08 3P-0200-PNP	0301497	●
Clip for plug / socket		
CLI-M8	0301463	
Connection cables		
KA BG08-L 3P-0300-PNP	0301622	●
KA BG08-L 3P-0500-PNP	0301623	
KA BW08-L 3P-0300-PNP	0301594	
KA BW08-L 3P-0500-PNP	0301502	
RSS radio sensor system		
RSS-T2	0377710	
Sensor distributor		
V2-M8	0301775	●
V4-M8	0301746	
V8-M8	0301751	

ⓘ Two sensors (closer/S) are required for each unit, plus extension cables as an option. Please note the minimum permitted bending radii for the sensor cables, which are generally 35 mm.

MMS PI1 programmable magnetic switches

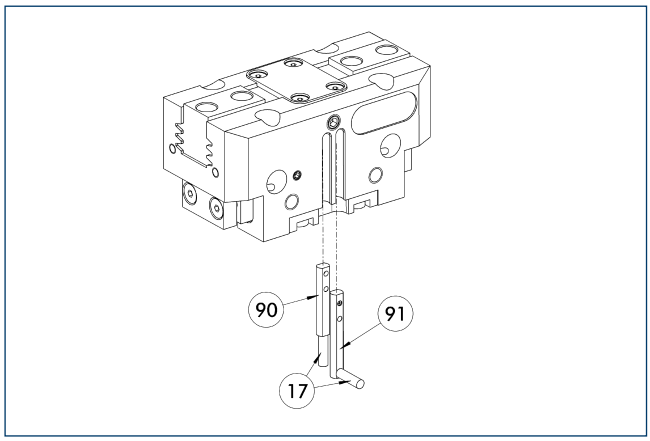

(17) Cable outlet
(91) MMS 22...-PI1-...-SA sensor
(90) MMS 22...-PI1-... sensor

Position query with one programmable position per sensor and electronics integrated in sensor. Programmable via MT magnet teaching tool (included in the scope of delivery) or ST plug teaching tool (optional). Limit position query mounted in C-groove. If the ST plug teaching tools are listed in the table, teaching can only take place with the ST plug teaching tools.

Description	ID	Often combined
MMS PI1 programmable magnetic switches		
MMS 22-PI1-S-M8-PNP	0301160	●
MMSK 22-PI1-S-PNP	0301162	
MMS PI1-HD programmable magnetic switches with stainless steel housing		
MMS 22-PI1-S-M8-PNP-HD	0301110	●
MMSK 22-PI1-S-PNP-HD	0301112	
MMS PI1 programmable magnetic switches with lateral cable outlet		
MMS 22-PI1-S-M8-PNP-SA	0301166	●
MMSK 22-PI1-S-PNP-SA	0301168	

ⓘ Two sensors (closer/S) are required for each unit, plus extension cables as an option. Please note the minimum permitted bending radii for the sensor cables, which are generally 35 mm. Connection cable, cable extensions, and sensor distributors can be found in the table for the MMS 22.

MMS-P programmable magnetic switches

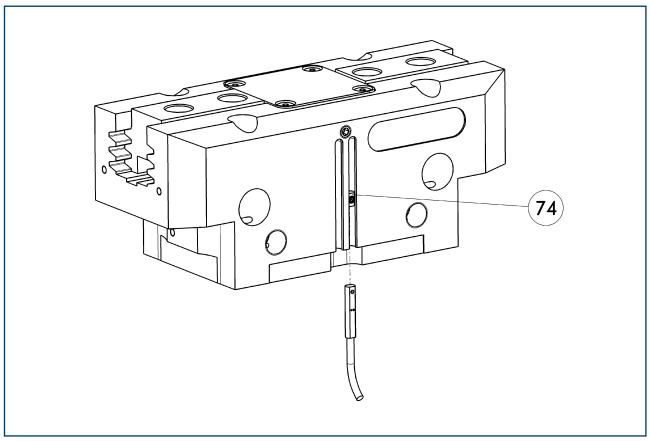

(74) Stop for MMS-P

Position monitoring with two programmable positions per sensor. The end position monitoring is mounted in the C-slot.

Description	ID	Often combined
MMS-P programmable magnetic switches		
MMS-P 22-S-M8-PNP	0301370	●
Clip for plug / socket		
CLI-M8	0301463	
Connection cables		
KA BG08-L 4P-0500	0307767	●
KA BG08-L 4P-1000	0307768	
KA BW08-L 4P-0500	0307765	
KA BW08-L 4P-1000	0307766	
Sensor distributor		
V2-M8-4P-2XM8-3P	0301380	

ⓘ Per unit one sensor (closer/S) is required, optionally a cable extension. Please note the minimum permitted bending radii for the sensor cables, which are generally 35 mm.

APS-Z80 analog position sensor

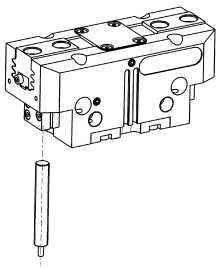

Contactlessly measuring, analog multi-position monitoring for any number of positions.

Description	ID	Often combined
Mounting kit for APS-Z80		
AS-APS-Z80-PGZN-plus 160-1/200-2/240-2	0302113	
AS-APS-Z80-PGZN-plus 200-1	0302115	
Sensor		
APS-Z80-K	0302072	
APS-Z80-M8	0302070	●

ⓘ When using an APS system, one mounting kit (AS-APS-Z80) and one APS-Z80 sensor is required per gripper.

APS-M1 analog position sensor

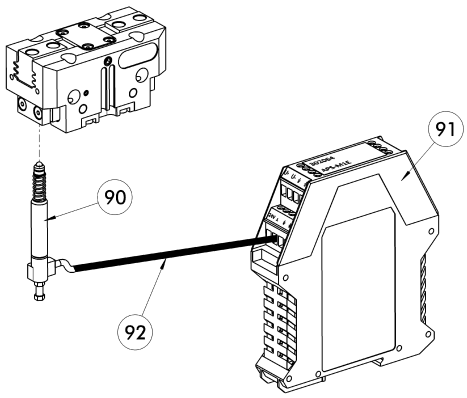

(90) APS-M1S sensor
(91) APS-M1E electronic processor
(92) APS-K extension cable

Analog multi position monitoring for any desired positions.

Description	ID	Often combined
Mounting kit for APS-M1		
AS-APS-M1-PGZN-plus 200-1/380-2	0302085	
AS-APS-M1-PGZN-plus 200-2	0302086	
Connection cables		
APS-K0200	0302066	●
APS-K0700	0302068	
Electronic processor		
APS-M1E	0302064	
Sensor		
APS-M1S	0302062	

ⓘ When using an APS system, for each gripper a mounting kit (AS-APS-M1), an APS-M1S sensor (incl. 3 m cable) as well as an electronics (APS-M1e) are required. An extension cable (APS-K) can be connected between the sensor and the electronics as an option. The max. cable length between the sensor and the electronics is 10 m, between the electronics and their control unit (PLC) it is max. 1 m.

Cylindrical reed switches

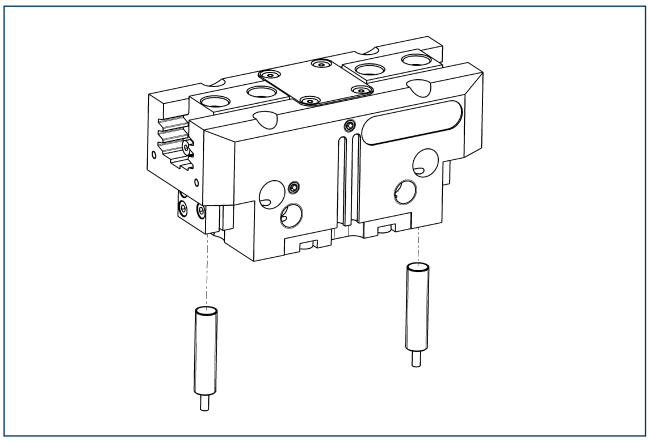

Limit position monitor can be mounted with mounting kit.

Description	ID	
Mounting kit for proximity switch		
AS-RMS 80 PGN/PZN-plus 160-380	0377727	
Reed switches		
RMS 80-S-M8	0377721	

ⓘ Two sensors (closer/S) are required for each unit, plus extension cables as an option. This mounting kit needs to be ordered optionally as an accessory. Two mounting kits are required per gripper. Please note the minimum permitted bending radii for the sensor cables, which are generally 35 mm.

PGN-plus 240

SCHUNK Grippers pneumatic | 2-Finger Parallel Grippers | Universal Gripper

Gripping force, O.D. gripping

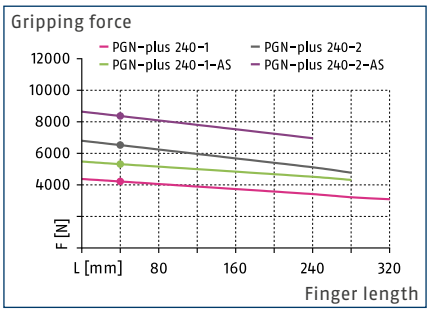

Gripping force, I.D. gripping

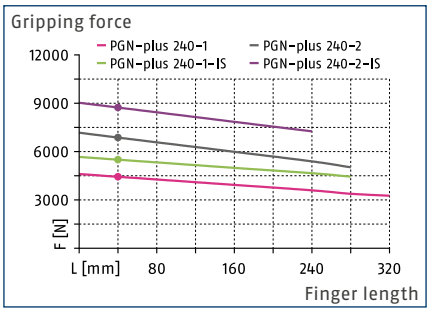

Finger load

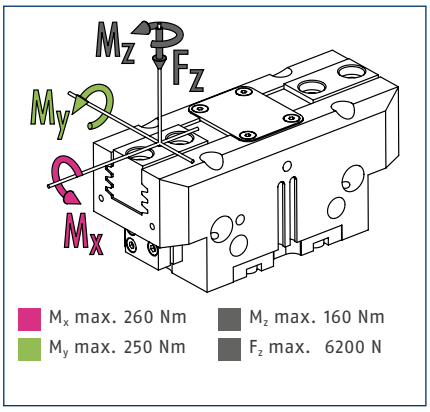

ⓘ The indicated moments and forces are static values, apply per base jaw and may occur simultaneously. M_y may arise in addition to the moment generated by the gripping force itself. If the max. permitted finger weight is exceeded, it is impreative to throttle the air supply so that the jaw movement occurs without any hitting or bouncing. Service life may be reduced.

Technical data

Description		PGN-plus 240-1	PGN-plus 240-2	PGN-plus 240-1-AS	PGN-plus 240-2-AS	PGN-plus 240-1-IS	PGN-plus 240-2-IS
ID		0371108	0371158	0371408	0371458	0371468	0371478
Stroke per jaw	[mm]	30	17	30	17	30	17
Closing- / opening force	[N]	4200/4440	6500/6870	5300/-	8340/-	-/5540	-/8710
min. spring force	[N]			1100	1840	1100	1840
Weight	[kg]	8.5	8.5	12	12	12	12
Recommended workpiece weight	[kg]	21.5	33	21.5	33	21.5	33
Fluid consumption per double stroke	[cm³]	650	650	810	810	995	995
min. / max. operating pressure	[bar]	2.5/8	2.5/8	4/6.5	4/6.5	4/6.5	4/6.5
Nominal operating pressure	[bar]	6	6	6	6	6	6
Closing- / opening time	[s]	0.45/0.45	0.45/0.45	0.35/0.65	0.35/0.65	0.65/0.35	0.65/0.35
Closing- / opening time only with spring	[s]			0.55	0.55	0.55	0.55
max. permitted finger length	[mm]	320	280	280	240	280	240
max. permitted weight per finger	[kg]	8.5	8.5	8.5	8.5	8.5	8.5
IP class		40	40	40	40	40	40
min. / max. ambient temperature	[°C]	5/90	5/90	5/90	5/90	5/90	5/90
Repeat accuracy	[mm]	0.04	0.04	0.04	0.04	0.04	0.04
Cleanroom class ISO 14644-1		5	5	5	5	5	5
Options and their characteristics							
Dust-tight version		37371108	37371158	37371408	37371458	37371468	37371478
IP class		64	64	64	64	64	64
Weight	[kg]	11.4	11.4	14.4	14.4	14.4	14.4
Anti-corrosion version		38371108	38371158	38371408	38371458	38371468	38371478
High-temperature version		39371108	39371158	39371408	39371458	39371468	39371478
min. / max. ambient temperature	[°C]	5/130	5/130	5/130	5/130	5/130	5/130
Precision version		0371128	0371178	0371428	0371443		

ⓘ The full gripping force according to the data table is only realised after around 100 gripping cycles.

Main view

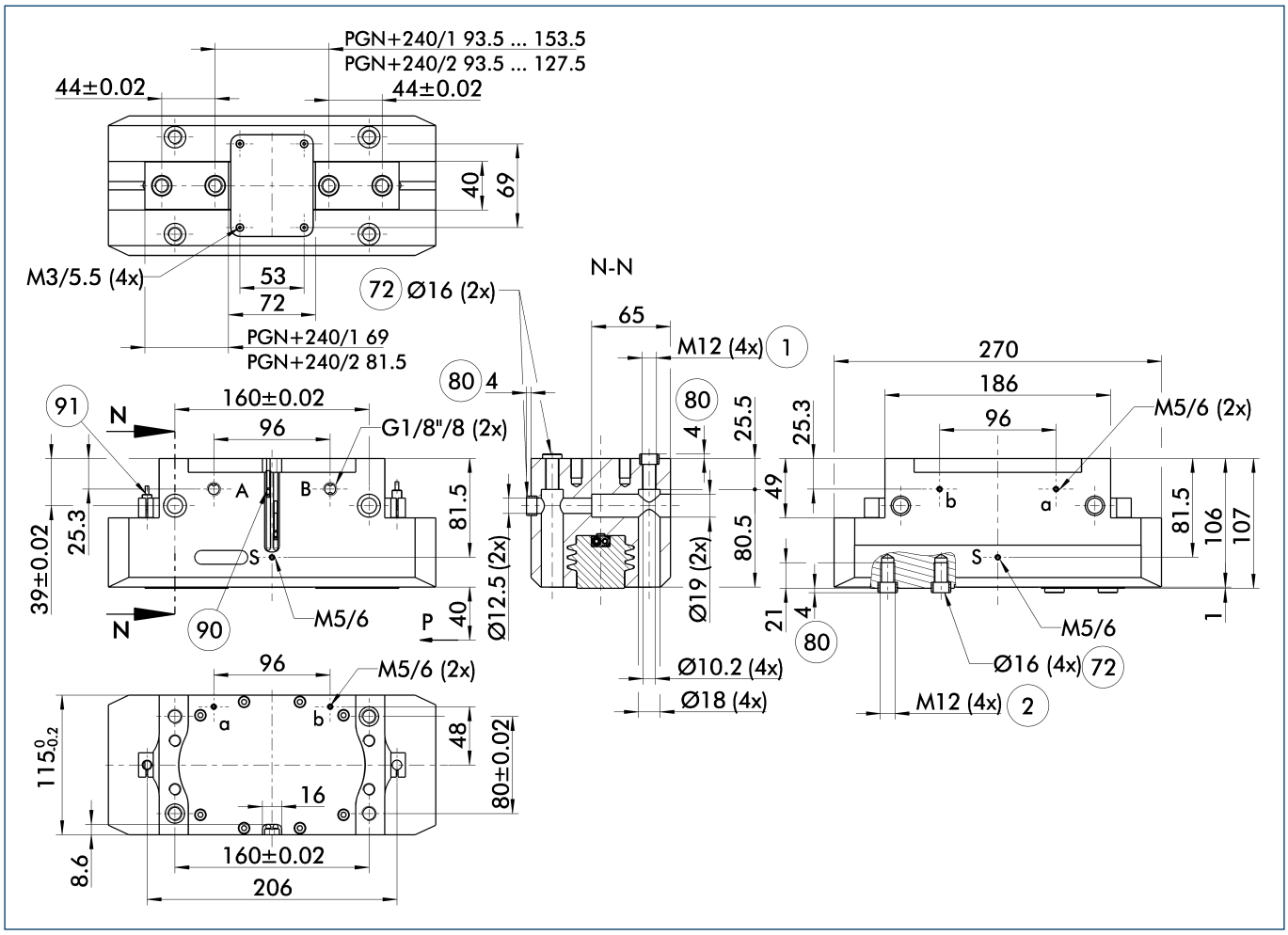

The drawing shows the gripper in the basic version with closed jaws, without dimensional consideration of the options described below.

ⓘ The SDV-P pressure maintenance valve can also be used for I.D. or O.D. gripping alternatively or in addition to the spring-loaded, mechanical gripping force maintenance device (see catalog section on "Accessories").

A, a Main / direct connection, gripper opening

B, b Main / direct connection, gripper closing

S Air purge connection (0.5 ... 1 bar)

(1) Gripper connection

(2) Finger connection

(72) Fit for centering sleeves

(80) Depth of the centering sleeve hole in the mating part

(90) MMS 22... sensor

(91) IN ... sensor

Maximum permitted finger projection

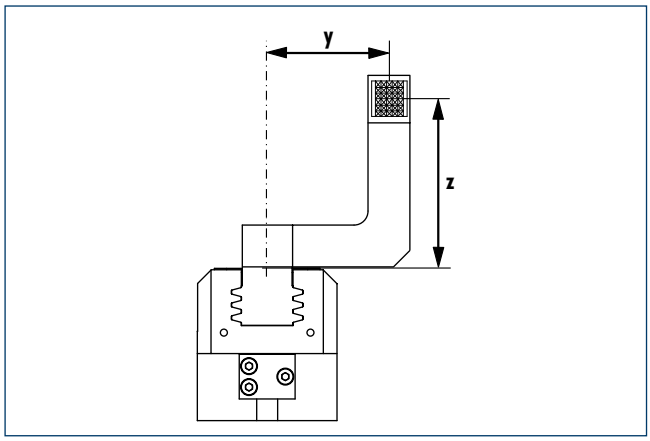

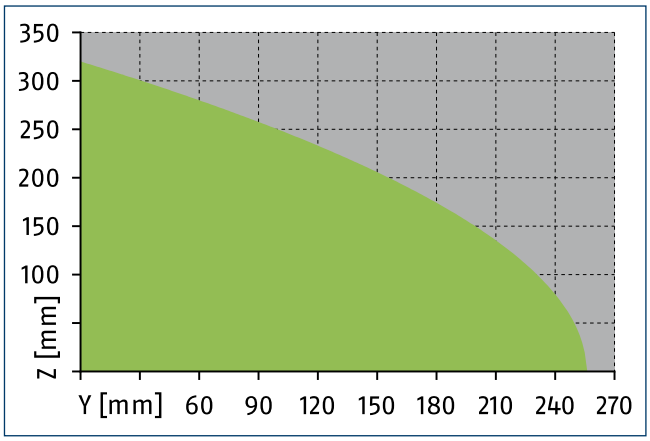

Permitted range

Inadmissible range

The curve applies for the base version (Stroke -1). For other versions, the curve must be offset in parallel corresponding to the max. permissible finger length.

Hose-free direct connection M5

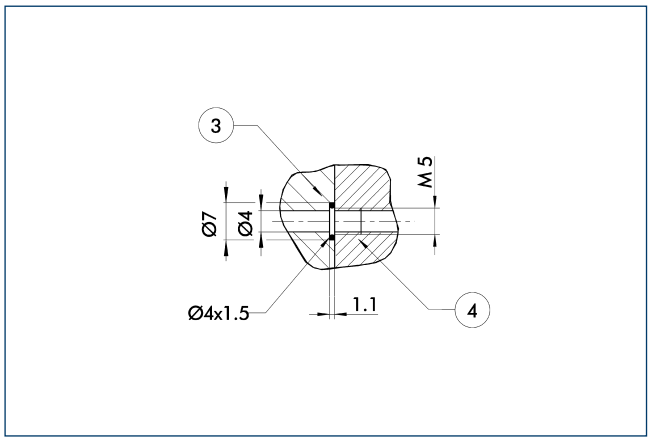

(3) Adapter (4) Gripper

The direct connection is used for supplying compressed air without hoses. Instead, the pressure medium is fed through bore-holes in the mounting plate.

Gripping force maintenance device AS / IS

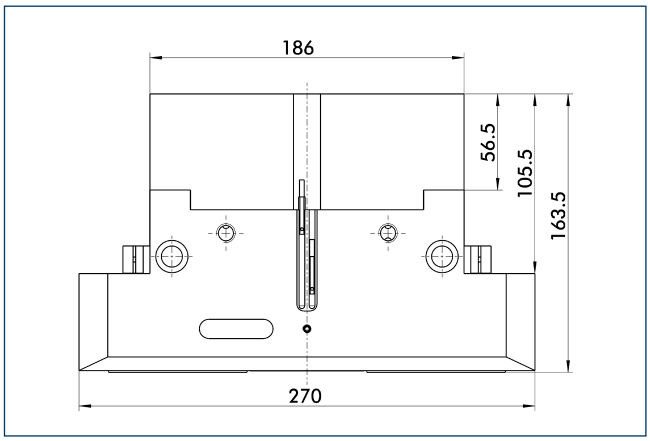

The mechanical maintenance of gripping force also assures a minimum gripping force in the case of a loss of pressure. With the AS / S variant, this acts as a closing force, and as an opening force for the IS variant. The maintenance of gripping force element can also be used as a means for increasing gripping force or for single actuated gripping.

Dust-tight version

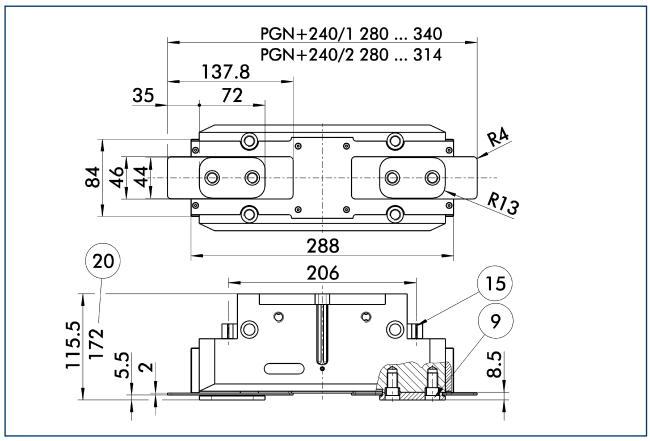

(9) For mounting screw connection diagram, see basic version
(15) Sealing bolt
(20) For AS / IS version

The "dust-protection" option increases the degree of protection against penetrating substances. The screw connection diagram shifts by the height of the intermediate jaw. The finger length is still measured from the upper edge of the gripper housing.

Precision version

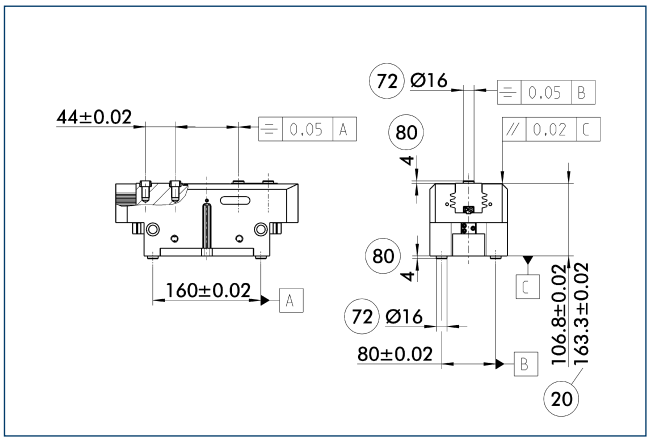

(20) For AS / IS version
(72) Fit for centering sleeves
(80) Depth of the centering sleeve hole in the mating part

The indicated tolerances just refer to the types of precision versions shown in the chart of technical specifications. All other types of precision versions are available on request.

SDV-P pressure maintenance valve

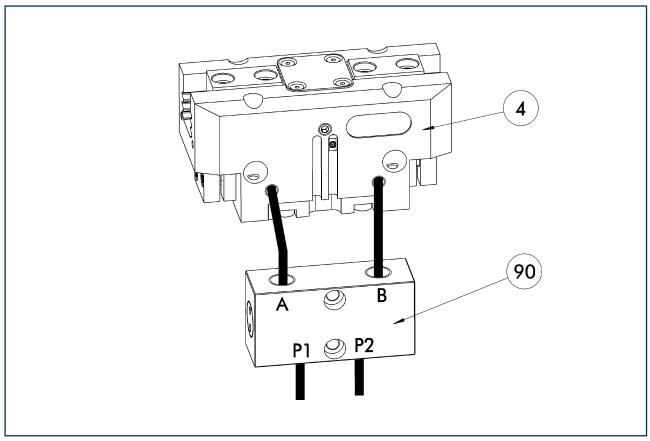

(4) Gripper
(90) SDV-P pressure maintenance valve

The SDV-P pressure maintenance valves ensure that the pressure in the piston chamber of pneumatic gripping, rotary, linear, and quick-change modules is maintained temporarily during an emergency stop.

Description	ID	
Pressure maintenance valve		
SDV-P 07	0403131	

BSWS jaw quick-change systems

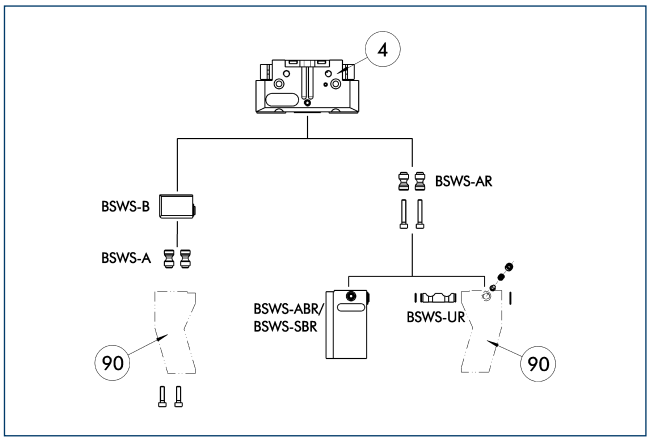

(4) Gripper
(90) Customized gripper fingers

Different jaw quick-change systems are available for this gripper. For more detailed information please see the relevant product chapters in the catalog.

Description	ID	
Jaw quick-change system base		
BSWS-B 240	0303035	
Jaw quick-change system adapter		
BSWS-A 240	0303034	

ⓘ Only the systems listed in the table can be used.

ZBA L-plus 240 intermediate jaws

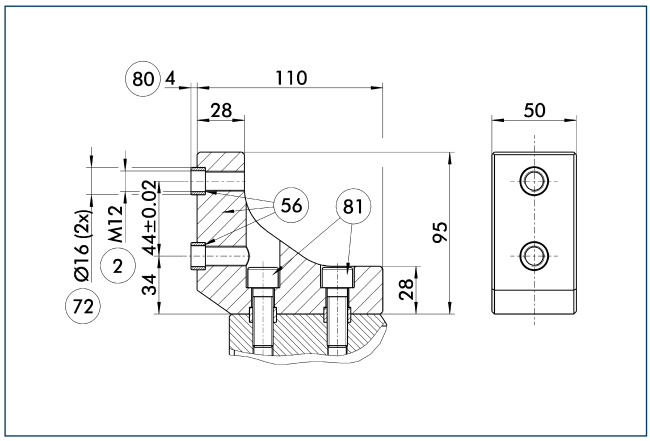

(2) Finger connection
(56) Included in delivery
(72) Fit for centering sleeves
(80) Depth of the centering sleeve hole in the mating part
(81) Not included in the scope of delivery

Optionally intermediate jaws can be used, enabling direct connection and alignment of top jaws and various standard accessories in Z-direction.

Description	ID	Material	Scope of delivery
Intermediate jaws			
ZBA-L-plus 240	0311782	Aluminum	1

ABR- / SBR-PGZN-plus 240 finger blanks

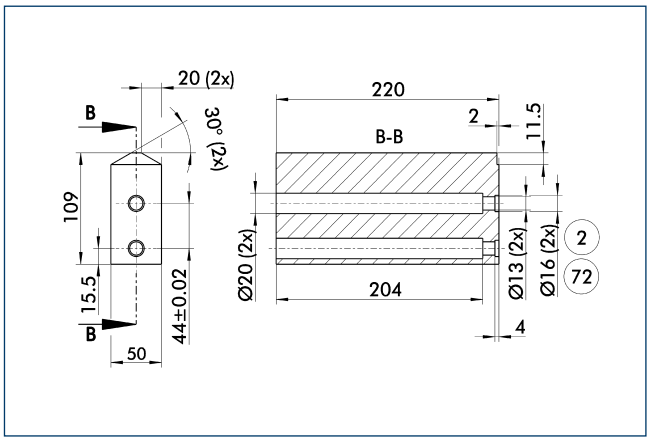

(2) Finger connection
(72) Fit for centering sleeves

Finger blanks for customized subsequent machining.

Description	ID	Material	Scope of delivery
Finger blanks			
ABR-PGZN-plus 240	0300017	Aluminum	1
SBR-PGZN-plus 240	0300027	16MnCr5	1

Inductive proximity switches

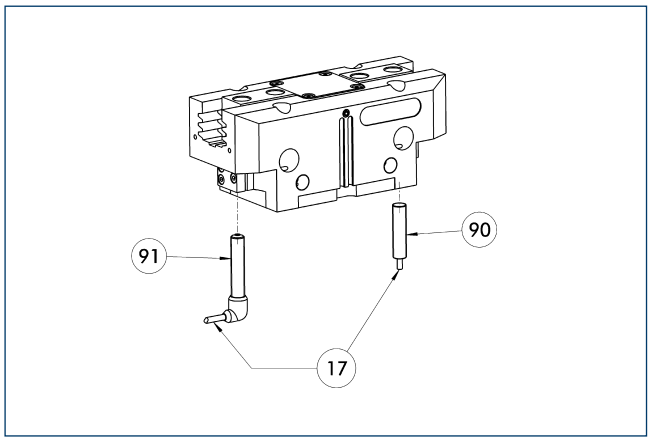

(17) Cable outlet
(90) IN ... sensor
(91) IN ...-SA sensor

Directly mounted limit position monitor.

Description	ID	Often combined
Inductive proximity switches		
IN 80-S-M12	0301578	
IN 80-S-M8	0301478	●
INK 80-S	0301550	
Inductive proximity switches with lateral outlet		
IN 80-S-M12-SA	0301587	
IN 80-S-M8-SA	0301483	●
INK 80-S-SA	0301566	
Cable extensions		
KV BG12-SG12 3P-0030-PNP	0301999	
KV BG12-SG12 3P-0060-PNP	0301998	
KV BW08-SG08 3P-0030-PNP	0301495	
KV BW08-SG08 3P-0100-PNP	0301496	
KV BW08-SG08 3P-0200-PNP	0301497	●
KV BW12-SG12 3P-0030-PNP	0301595	
KV BW12-SG12 3P-0100-PNP	0301596	
KV BW12-SG12 3P-0200-PNP	0301597	
Clip for plug / socket		
CLI-M12	0301464	
CLI-M8	0301463	
Connection cables		
KA BG08-L 3P-0300-PNP	0301622	●
KA BG08-L 3P-0500-PNP	0301623	
KA BG12-L 3P-0500-PNP	30016369	
KA BW08-L 3P-0300-PNP	0301594	
KA BW08-L 3P-0500-PNP	0301502	
KA BW12-L 3P-0300-PNP	0301503	
KA BW12-L 3P-0500-PNP	0301507	
Sensor distributor		
V2-M8	0301775	●
V2-M12	0301776	●
V4-M12	0301747	
V4-M8	0301746	

ⓘ Two sensors (closer/S) are required for each unit, plus extension cables as an option. Please note the minimum permitted bending radii for the sensor cables, which are generally 35 mm.

Flexible position sensor

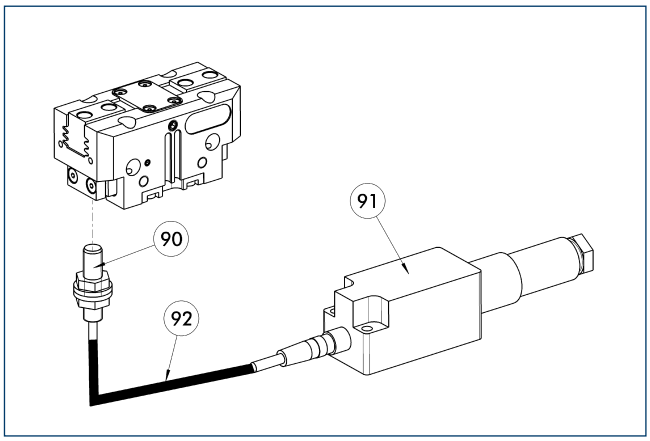

(90) FPS-S sensor
(91) FPS-F5 / -F5 T electronic processor
(92) Cable extensions

Flexible position monitoring of up to five positions.

Description	ID	Often combined
Mounting kit for FPS		
AS-FPS-PGZN-plus 240-1	0301643	
AS-FPS-PGZN-plus 240-2	0301644	
Electronic processor		
FPS-F5	0301805	●
FPS-F5 T	0301807	
Sensor		
FPS-S M8	0301704	
Clip for plug / socket		
CLI-M8	0301463	

ⓘ When using a FPS system, a FPS sensor (FPS-S) and a control unit (FPS-F5 / F5 T) are required for each gripper as well as a mounting kit (AS), if listed. Cable extensions (KV) are available as options in the "Accessories" catalog section.

MMS electronic magnetic switches

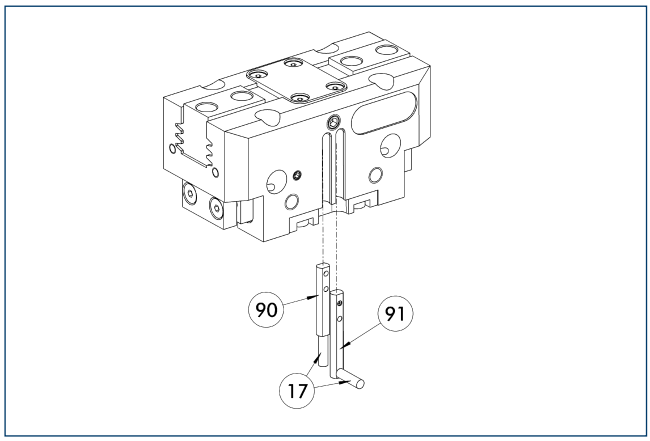

17 Cable outlet
91 MMS 22...-SA sensor
90 MMS 22... sensor

End position monitoring for mounting in the C-slot.

Description	ID	Often combined
MMS electronic magnetic switches		
MMS 22-S-M8-PNP	0301032	●
MMSK 22-S-PNP	0301034	
MMS electronic magnetic switches with lateral cable outlet		
MMS 22-S-M8-PNP-SA	0301042	●
MMSK 22-S-PNP-SA	0301044	
Reed switches		
RMS 22-S-M8	0377720	●
Cable extensions		
KV BW08-SG08 3P-0030-PNP	0301495	
KV BW08-SG08 3P-0100-PNP	0301496	
KV BW08-SG08 3P-0200-PNP	0301497	●
Clip for plug / socket		
CLI-M8	0301463	
Connection cables		
KA BG08-L 3P-0300-PNP	0301622	●
KA BG08-L 3P-0500-PNP	0301623	
KA BW08-L 3P-0300-PNP	0301594	
KA BW08-L 3P-0500-PNP	0301502	
RSS radio sensor system		
RSS-T2	0377710	
Sensor distributor		
V2-M8	0301775	●
V4-M8	0301746	
V8-M8	0301751	

ⓘ Two sensors (closer/S) are required for each unit, plus extension cables as an option. Please note the minimum permitted bending radii for the sensor cables, which are generally 35 mm.

MMS PI1 programmable magnetic switches

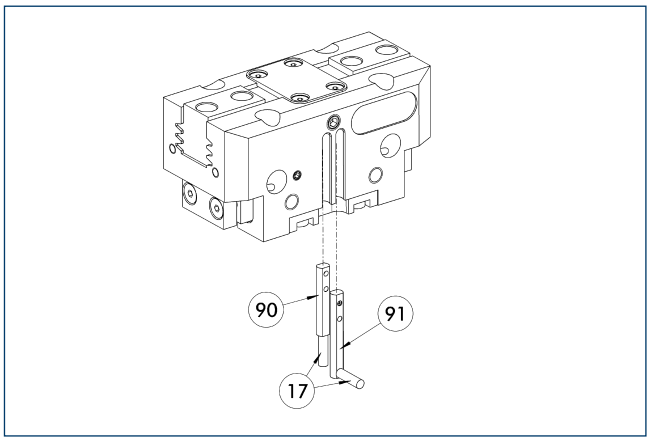

17 Cable outlet
91 MMS 22...-PI1-...-SA sensor
90 MMS 22...-PI1-... sensor

Position query with one programmable position per sensor and electronics integrated in sensor. Programmable via MT magnet teaching tool (included in the scope of delivery) or ST plug teaching tool (optional). Limit position query mounted in C-groove. If the ST plug teaching tools are listed in the table, teaching can only take place with the ST plug teaching tools.

Description	ID	Often combined
MMS PI1 programmable magnetic switches		
MMS 22-PI1-S-M8-PNP	0301160	●
MMSK 22-PI1-S-PNP	0301162	
MMS PI1-HD programmable magnetic switches with stainless steel housing		
MMS 22-PI1-S-M8-PNP-HD	0301110	●
MMSK 22-PI1-S-PNP-HD	0301112	
MMS PI1 programmable magnetic switches with lateral cable outlet		
MMS 22-PI1-S-M8-PNP-SA	0301166	●
MMSK 22-PI1-S-PNP-SA	0301168	

ⓘ Two sensors (closer/S) are required for each unit, plus extension cables as an option. Please note the minimum permitted bending radii for the sensor cables, which are generally 35 mm. Connection cable, cable extensions, and sensor distributors can be found in the table for the MMS 22.

MMS-P programmable magnetic switches

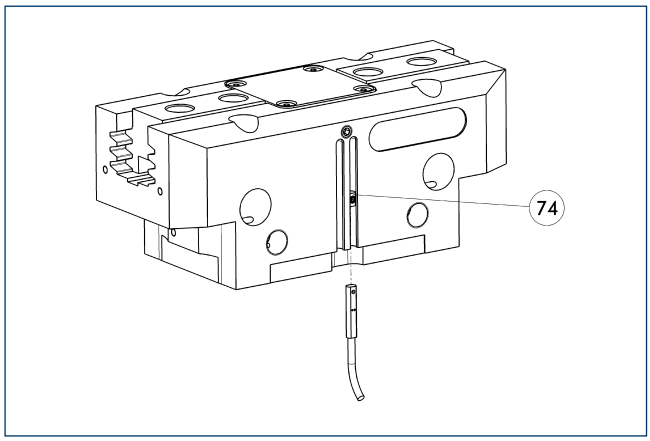

74 Stop for MMS-P

Position monitoring with two programmable positions per sensor. The end position monitoring is mounted in the C-slot.

Description	ID	Often combined
MMS-P programmable magnetic switches		
MMS-P 22-S-M8-PNP	0301370	●
Clip for plug / socket		
CLI-M8	0301463	
Connection cables		
KA BG08-L 4P-0500	0307767	●
KA BG08-L 4P-1000	0307768	
KA BW08-L 4P-0500	0307765	
KA BW08-L 4P-1000	0307766	
Sensor distributor		
V2-M8-4P-2XM8-3P	0301380	

ⓘ Per unit one sensor (closer/S) is required, optionally a cable extension. Please note the minimum permitted bending radii for the sensor cables, which are generally 35 mm.

APS-Z80 analog position sensor

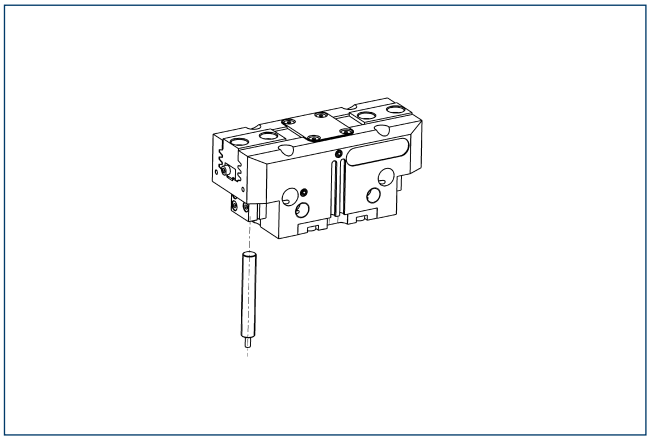

Contactlessly measuring, analog multi-position monitoring for any number of positions.

Description	ID	Often combined
Mounting kit for APS-Z80		
AS-APS-Z80-PGZN-plus 160-1/200-2/240-2	0302113	
AS-APS-Z80-PGZN-plus 240-1	0302116	
Sensor		
APS-Z80-K	0302072	
APS-Z80-M8	0302070	●

ⓘ When using an APS system, one mounting kit (AS-APS-Z80) and one APS-Z80 sensor is required per gripper.

APS-M1 analog position sensor

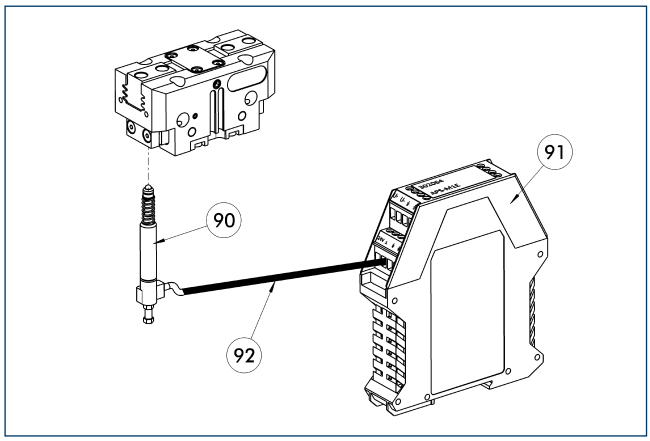

90 APS-M1S sensor
91 APS-M1E electronic processor
92 APS-K extension cable

Analog multi position monitoring for any desired positions.

Description	ID	Often combined
Mounting kit for APS-M1		
AS-APS-M1-PGZN-plus 160-1/240-2	0302083	
AS-APS-M1-PGZN-plus 240-1	0302087	
Connection cables		
APS-K0200	0302066	●
APS-K0700	0302068	
Electronic processor		
APS-M1E	0302064	
Sensor		
APS-M1S	0302062	

ⓘ When using an APS system, for each gripper a mounting kit (AS-APS-M1), an APS-M1S sensor (incl. 3 m cable) as well as an electronics (APS-M1e) are required. An extension cable (APS-K) can be connected between the sensor and the electronics as an option. The max. cable length between the sensor and the electronics is 10 m, between the electronics and their control unit (PLC) it is max. 1 m.

Cylindrical reed switches

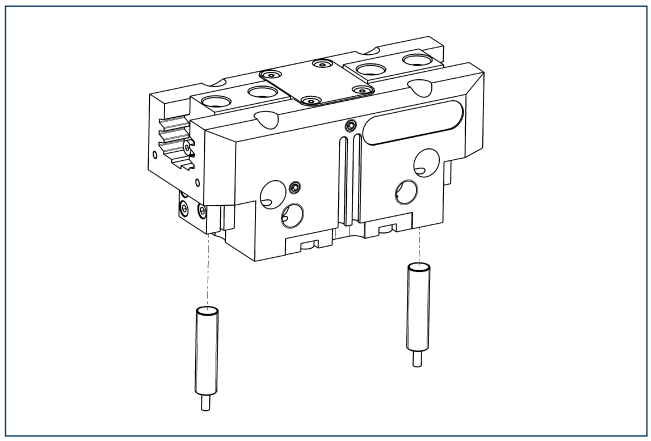

Limit position monitor can be mounted with mounting kit.

Description	ID	
Mounting kit for proximity switch		
AS-RMS 80 PGN/PZN-plus 160-380	0377727	
Reed switches		
RMS 80-S-M8	0377721	

ⓘ Two sensors (closer/S) are required for each unit, plus extension cables as an option. This mounting kit needs to be ordered optionally as an accessory. Two mounting kits are required per gripper. Please note the minimum permitted bending radii for the sensor cables, which are generally 35 mm.

PGN-plus 300

SCHUNK Grippers pneumatic | 2-Finger Parallel Grippers | Universal Gripper

Gripping force, O.D. gripping

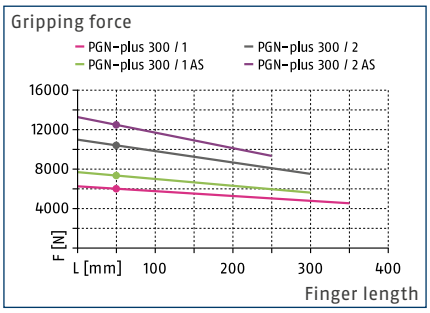

Gripping force, I.D. gripping

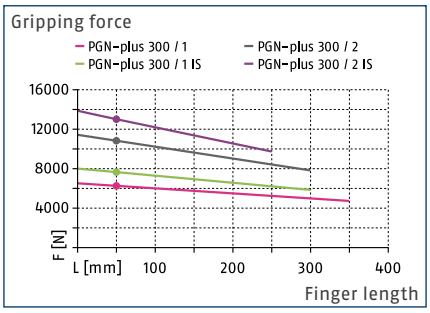

Finger load

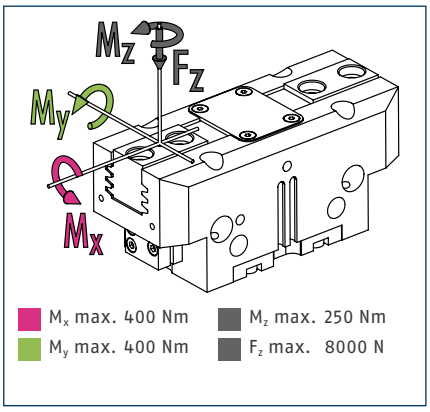

ⓘ The indicated moments and forces are static values, apply per base jaw and may occur simultaneously. M_y may arise in addition to the moment generated by the gripping force itself. If the max. permitted finger weight is exceeded, it is impreative to throttle the air supply so that the jaw movement occurs without any hitting or bouncing. Service life may be reduced.

Technical data

Description		PGN-plus 300-1	PGN-plus 300-2	PGN-plus 300-1-AS	PGN-plus 300-2-AS	PGN-plus 300-1-IS	PGN-plus 300-2-IS
ID		0371106	0371156	0371406	0371456	0371466	0371476
Stroke per jaw	[mm]	35	20	35	20	35	20
Closing- / opening force	[N]	6000/6260	10300/10800	7400/-	12500/-	-/7660	-/13000
min. spring force	[N]			1400	2200	1400	2200
Weight	[kg]	13.9	13.9	17.2	17.2	17.2	17.2
Recommended workpiece weight	[kg]	30	51.5	30	51.5	30	51.5
Fluid consumption per double stroke	[cm³]	1040	1040	1295	1295	1560	1560
min. / max. operating pressure	[bar]	2.5/8	2.5/8	4/6.5	4/6.5	4/6.5	4/6.5
Nominal operating pressure	[bar]	6	6	6	6	6	6
Closing- / opening time	[s]	0.5/0.5	0.5/0.5	0.4/0.7	0.4/0.7	0.7/0.4	0.7/0.4
Closing- / opening time only with spring	[s]			0.60	0.60	0.60	0.60
max. permitted finger length	[mm]	350	300	300	250	300	250
max. permitted weight per finger	[kg]	11.5	11.5	11.5	11.5	11.5	11.5
IP class		40	40	40	40	40	40
min. / max. ambient temperature	[°C]	5/90	5/90	5/90	5/90	5/90	5/90
Repeat accuracy	[mm]	0.05	0.05	0.05	0.05	0.05	0.05
Cleanroom class ISO 14644-1		5	5	5	5	5	5
Options and their characteristics							
Dust-tight version		37371106	37371156	37371406	37371456	37371466	37371476
IP class		64	64	64	64	64	64
Weight	[kg]	17.6	17.6	21.3	21.3	21.3	21.3
Anti-corrosion version		38371106	38371156	38371406	38371456	38371466	38371476
High-temperature version		39371106	39371156	39371406	39371456	39371466	39371476
min. / max. ambient temperature	[°C]	5/130	5/130	5/130	5/130	5/130	5/130
Precision version		0371129	0371179	0371429	0371444		

ⓘ The full gripping force according to the data table is only realised after around 100 gripping cycles.

Main view

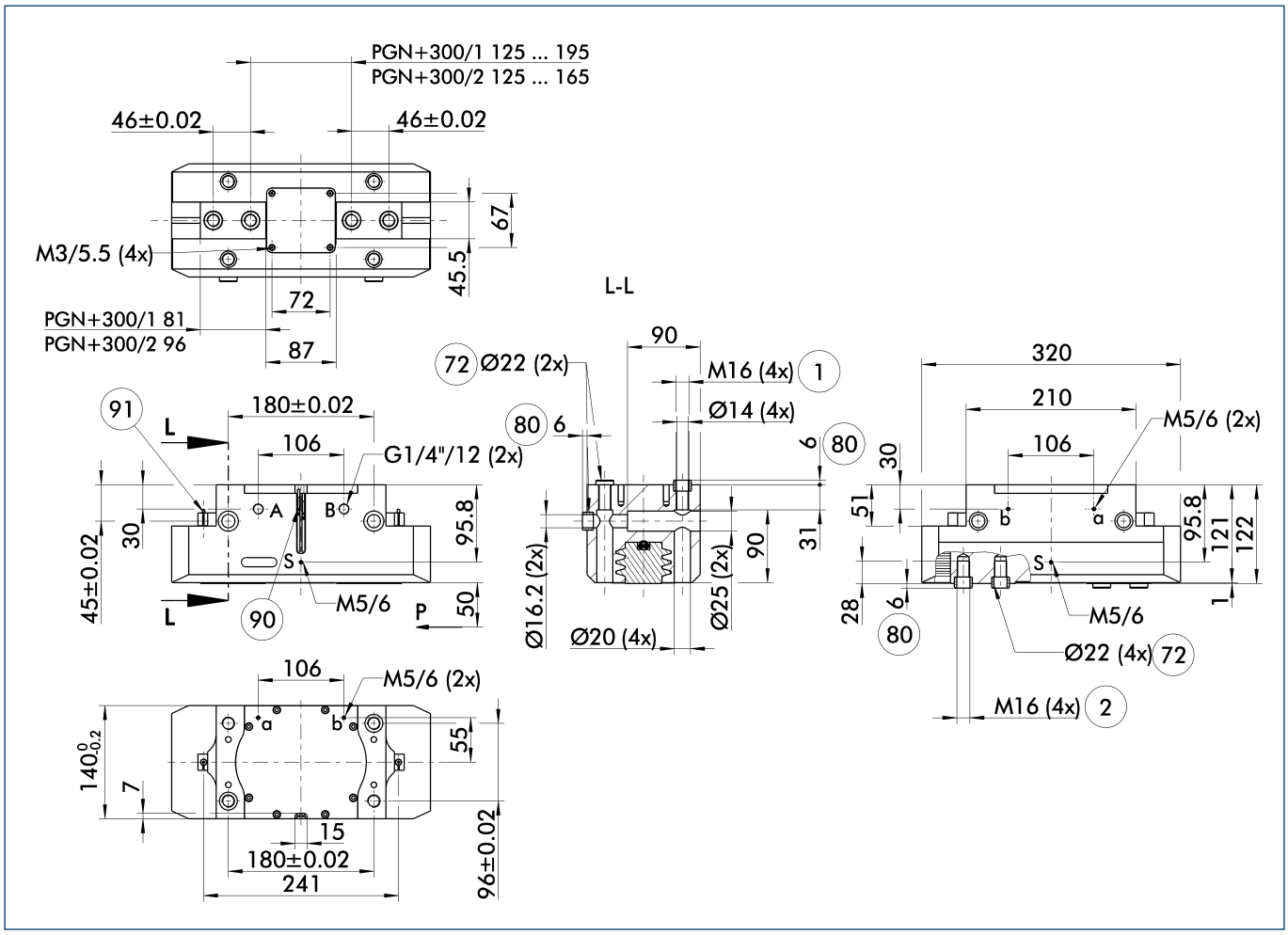

The drawing shows the gripper in the basic version with closed jaws, without dimensional consideration of the options described below.

ⓘ The SDV-P pressure maintenance valve can also be used for I.D. or O.D. gripping alternatively or in addition to the spring-loaded, mechanical gripping force maintenance device (see catalog section on "Accessories").

A, a Main / direct connection, gripper opening

B, b Main / direct connection, gripper closing

S Air purge connection (0.5 ... 1 bar)

(1) Gripper connection

(2) Finger connection

(72) Fit for centering sleeves

(80) Depth of the centering sleeve hole in the mating part

(90) MMS 22... sensor

(91) IN ... sensor

Maximum permitted finger projection

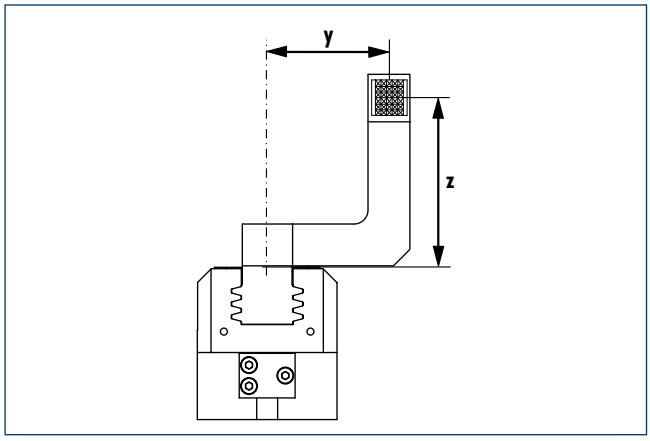

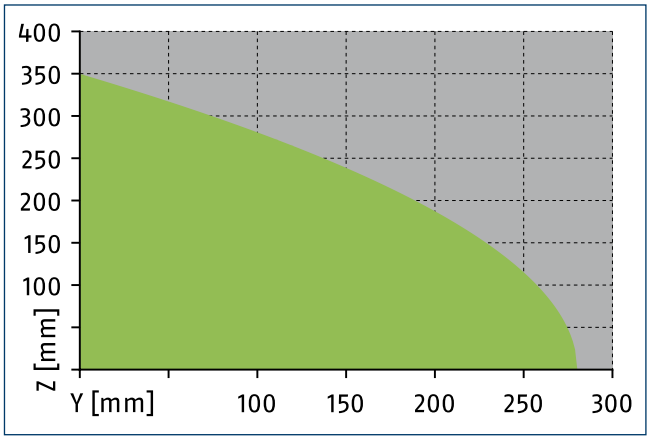

Permitted range

Inadmissible range

The curve applies for the base version (Stroke -1). For other versions, the curve must be offset in parallel corresponding to the max. permissible finger length.

Hose-free direct connection M5

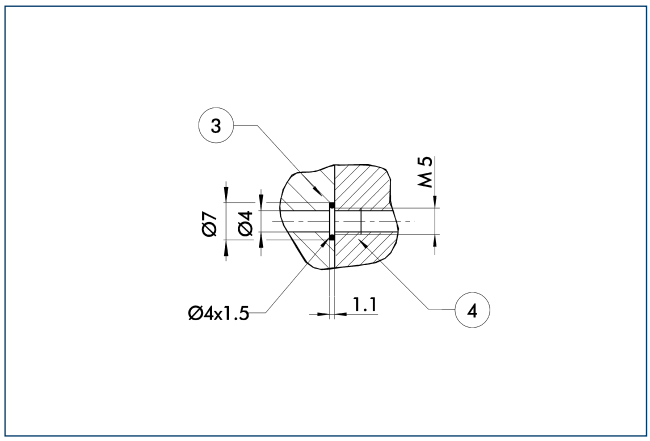

3 Adapter

4 Gripper

The direct connection is used for supplying compressed air without hoses. Instead, the pressure medium is fed through bore-holes in the mounting plate.

Gripping force maintenance device AS / IS

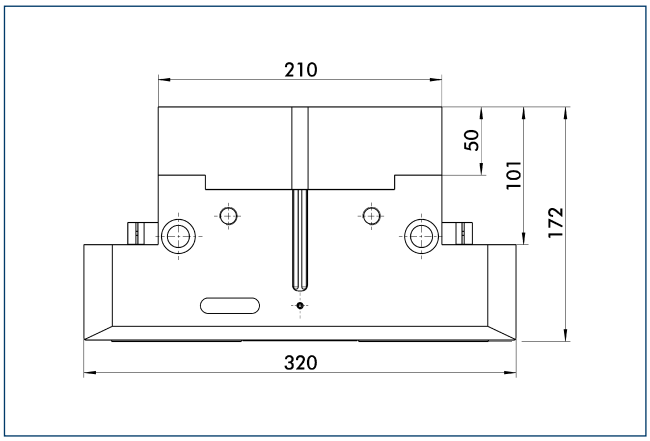

The mechanical maintenance of gripping force also assures a minimum gripping force in the case of a loss of pressure. With the AS / S variant, this acts as a closing force, and as an opening force for the IS variant. The maintenance of gripping force element can also be used as a means for increasing gripping force or for single actuated gripping.

Dust-tight version

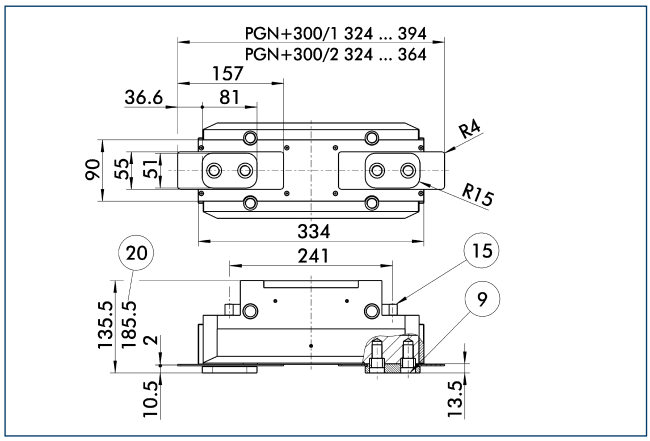

(9) For mounting screw connection diagram, see basic version
(15) Sealing bolt
(20) For AS / IS version

The "dust-protection" option increases the degree of protection against penetrating substances. The screw connection diagram shifts by the height of the intermediate jaw. The finger length is still measured from the upper edge of the gripper housing.

Precision version

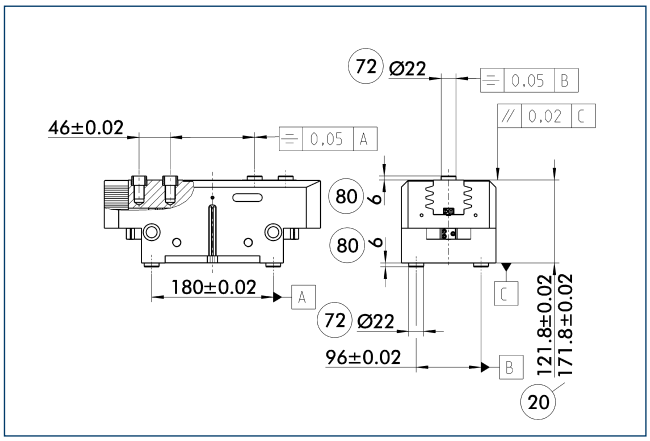

(20) For AS / IS version
(72) Fit for centering sleeves
(80) Depth of the centering sleeve hole in the mating part

The indicated tolerances just refer to the types of precision versions shown in the chart of technical specifications. All other types of precision versions are available on request.

SDV-P pressure maintenance valve

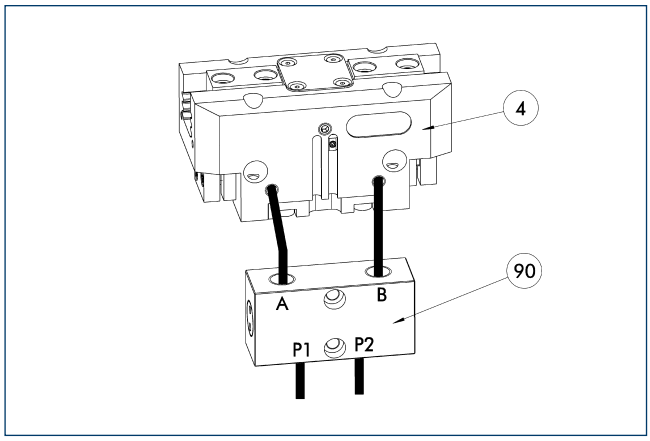

(4) Gripper
(90) SDV-P pressure maintenance valve

The SDV-P pressure maintenance valves ensure that the pressure in the piston chamber of pneumatic gripping, rotary, linear, and quick-change modules is maintained temporarily during an emergency stop.

Description	ID	
Pressure maintenance valve		
SDV-P 10	0300108	

BSWS jaw quick-change systems

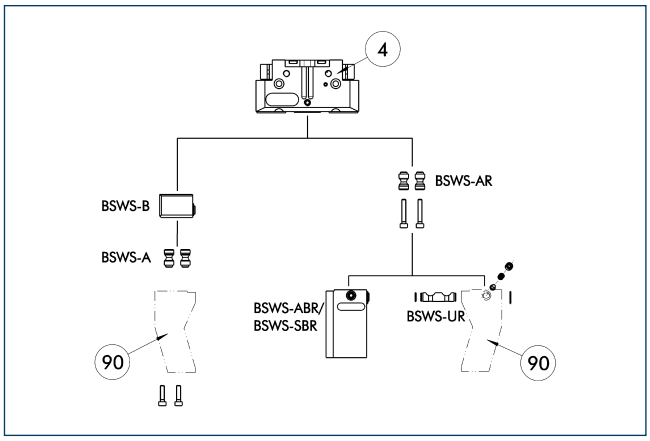

(4) Gripper
(90) Customized gripper fingers

There are various jaw quick-change systems available for the grippers. For detailed information, refer to the appropriate product.

Description	ID	
Jaw quick-change system base		
BSWS-B 300	0303037	
Jaw quick-change system adapter		
BSWS-A 300	0303036	

ⓘ Only the systems listed in the table can be used.

FMS-ZBA / ZBP 300 force-measuring jaws

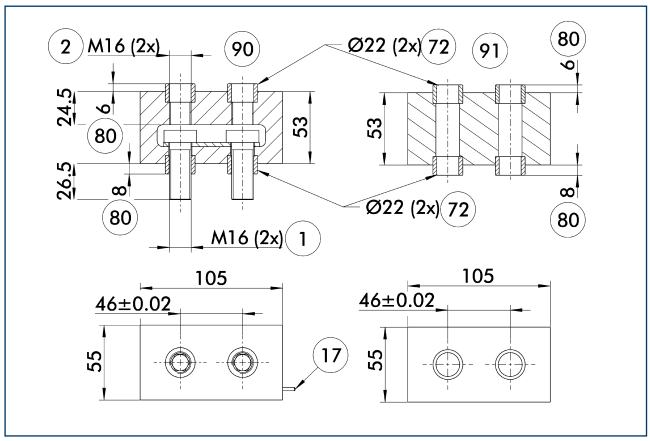

1 Gripper connection
2 Finger connection
17 Cable outlet
72 Fit for centering sleeves
80 Depth of the centering sleeve hole in the mating part
90 Active intermediate jaws
91 Passive intermediate jaws

Force measuring jaws measure gripping forces, but can also determine workpiece weights or dimensional deviations. There are active and passive intermediate jaws (FMS-ZBA or FMS-ZBP). At least one active force measuring jaw is required per gripper, the rest can be passive. For each active jaw, a FMS-A control unit and a FMS-AK connection cable are required.

Description	ID	Often combined
Active intermediate jaws		
FMS-ZBA 300	0301846	
Passive intermediate jaws		
FMS-ZBP 300	0301847	
Connection cables		
FMS-AK0200	0301820	●
FMS-AK0500	0301821	
FMS-AK1000	0301822	
FMS-AK2000	0301823	
Electronic processor		
FMS-A2	0301811	

ABR- / SBR-PGZN-plus 300 finger blanks

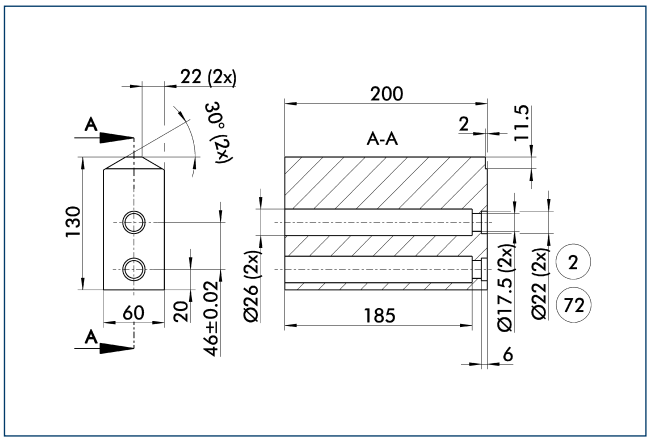

2 Finger connection
72 Fit for centering sleeves

Finger blanks for customized subsequent machining.

Description	ID	Material	Scope of delivery
Finger blanks			
ABR-PGZN-plus 300	0300016	Aluminum	1
SBR-PGZN-plus 300	0300026	16MnCr5	1

Inductive proximity switches

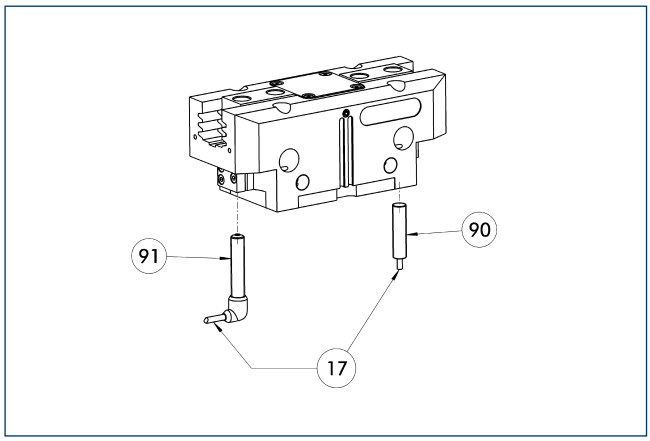

(17) Cable outlet
(90) IN ... sensor
(91) IN ...-SA sensor

Directly mounted limit position monitor.

Description	ID	Often combined
Inductive proximity switches		
IN 80-S-M12	0301578	
IN 80-S-M8	0301478	●
INK 80-S	0301550	
Inductive proximity switches with lateral outlet		
IN 80-S-M12-SA	0301587	
IN 80-S-M8-SA	0301483	●
INK 80-S-SA	0301566	
Cable extensions		
KV BG12-SG12 3P-0030-PNP	0301999	
KV BG12-SG12 3P-0060-PNP	0301998	
KV BW08-SG08 3P-0030-PNP	0301495	
KV BW08-SG08 3P-0100-PNP	0301496	
KV BW08-SG08 3P-0200-PNP	0301497	●
KV BW12-SG12 3P-0030-PNP	0301595	
KV BW12-SG12 3P-0100-PNP	0301596	
KV BW12-SG12 3P-0200-PNP	0301597	
Clip for plug / socket		
CLI-M12	0301464	
CLI-M8	0301463	
Connection cables		
KA BG08-L 3P-0300-PNP	0301622	●
KA BG08-L 3P-0500-PNP	0301623	
KA BG12-L 3P-0500-PNP	30016369	
KA BW08-L 3P-0300-PNP	0301594	
KA BW08-L 3P-0500-PNP	0301502	
KA BW12-L 3P-0300-PNP	0301503	
KA BW12-L 3P-0500-PNP	0301507	
Sensor distributor		
V2-M8	0301775	●
V2-M12	0301776	●
V4-M12	0301747	
V4-M8	0301746	

ⓘ Two sensors (closer/S) are required for each unit, plus extension cables as an option. Please note the minimum permitted bending radii for the sensor cables, which are generally 35 mm.

Flexible position sensor

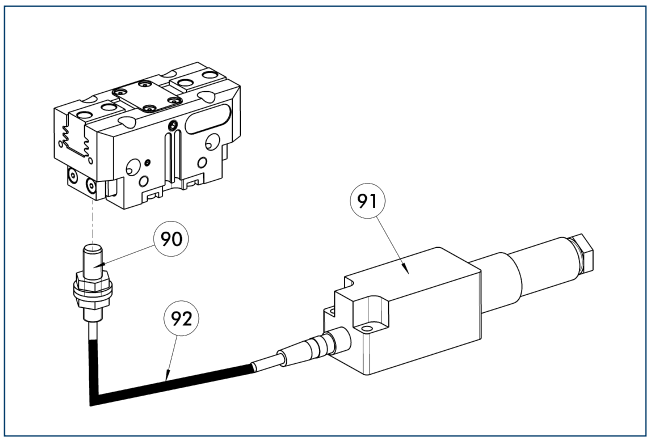

(90) FPS-S sensor
(91) FPS-F5 / -F5 T electronic processor
(92) Cable extensions

Flexible position monitoring of up to five positions.

Description	ID	Often combined
Mounting kit for FPS		
AS-FPS-PGZN-plus 300-2	0301642	
Electronic processor		
FPS-F5	0301805	●
FPS-F5 T	0301807	
Sensor		
FPS-S M8	0301704	
Clip for plug / socket		
CLI-M8	0301463	

ⓘ When using a FPS system, a FPS sensor (FPS-S) and a control unit (FPS-F5 / F5 T) are required for each gripper as well as a mounting kit (AS), if listed. Cable extensions (KV) are available as options in the "Accessories" catalog section.

MMS electronic magnetic switches

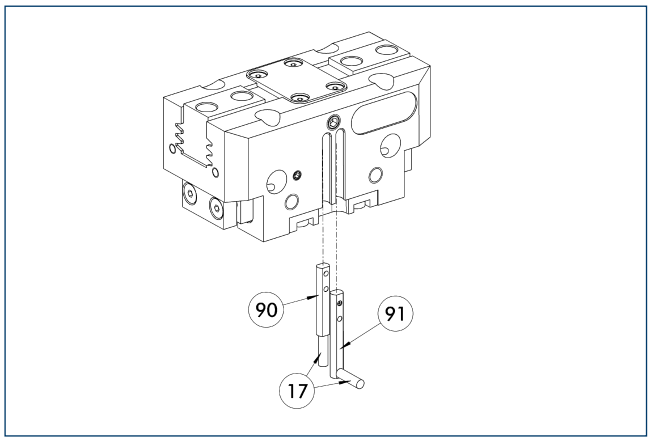

17 Cable outlet
91 MMS 22...-SA sensor
90 MMS 22... sensor

End position monitoring for mounting in the C-slot.

Description	ID	Often combined
MMS electronic magnetic switches		
MMS 22-S-M8-PNP	0301032	●
MMSK 22-S-PNP	0301034	
MMS electronic magnetic switches with lateral cable outlet		
MMS 22-S-M8-PNP-SA	0301042	●
MMSK 22-S-PNP-SA	0301044	
Reed switches		
RMS 22-S-M8	0377720	●
Cable extensions		
KV BW08-SG08 3P-0030-PNP	0301495	
KV BW08-SG08 3P-0100-PNP	0301496	
KV BW08-SG08 3P-0200-PNP	0301497	●
Clip for plug / socket		
CLI-M8	0301463	
Connection cables		
KA BG08-L 3P-0300-PNP	0301622	●
KA BG08-L 3P-0500-PNP	0301623	
KA BW08-L 3P-0300-PNP	0301594	
KA BW08-L 3P-0500-PNP	0301502	
RSS radio sensor system		
RSS-T2	0377710	
Sensor distributor		
V2-M8	0301775	●
V4-M8	0301746	
V8-M8	0301751	

ⓘ Two sensors (closer/S) are required for each unit, plus extension cables as an option. Please note the minimum permitted bending radii for the sensor cables, which are generally 35 mm.

MMS PI1 programmable magnetic switches

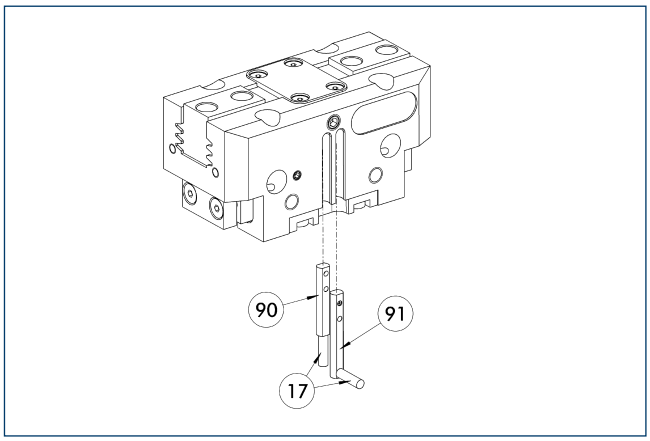

17 Cable outlet
91 MMS 22...-PI1-...-SA sensor
90 MMS 22...-PI1-... sensor

Position query with one programmable position per sensor and electronics integrated in sensor. Programmable via MT magnet teaching tool (included in the scope of delivery) or ST plug teaching tool (optional). Limit position query mounted in C-groove. If the ST plug teaching tools are listed in the table, teaching can only take place with the ST plug teaching tools.

Description	ID	Often combined
MMS PI1 programmable magnetic switches		
MMS 22-PI1-S-M8-PNP	0301160	●
MMSK 22-PI1-S-PNP	0301162	
MMS PI1-HD programmable magnetic switches with stainless steel housing		
MMS 22-PI1-S-M8-PNP-HD	0301110	●
MMSK 22-PI1-S-PNP-HD	0301112	
MMS PI1 programmable magnetic switches with lateral cable outlet		
MMS 22-PI1-S-M8-PNP-SA	0301166	●
MMSK 22-PI1-S-PNP-SA	0301168	

ⓘ Two sensors (closer/S) are required for each unit, plus extension cables as an option. Please note the minimum permitted bending radii for the sensor cables, which are generally 35 mm. Connection cable, cable extensions, and sensor distributors can be found in the table for the MMS 22.

APS-Z80 analog position sensor

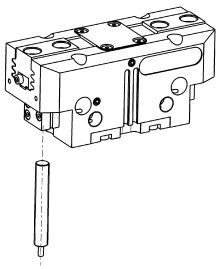

Contactlessly measuring, analog multi-position monitoring for any number of positions.

Description	ID	Often combined
Mounting kit for APS-Z80		
AS-APS-Z80-PGZN-plus 300-1	0302117	
AS-APS-Z80-PGZN-plus 300-2	0302118	
Sensor		
APS-Z80-K	0302072	
APS-Z80-M8	0302070	●

ⓘ When using an APS system, one mounting kit (AS-APS-Z80) and one APS-Z80 sensor is required per gripper.

APS-M1 analog position sensor

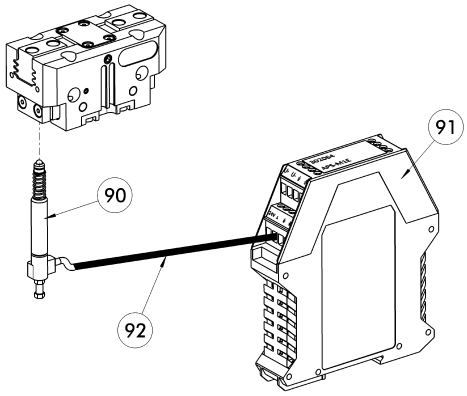

(90) APS-M1S sensor
(91) APS-M1E electronic processor
(92) APS-K extension cable

Analog multi position monitoring for any desired positions.

Description	ID	Often combined
Mounting kit for APS-M1		
AS-APS-M1-PGZN-plus 300-1	0302088	
AS-APS-M1-PGZN-plus 300-2	0302089	
Connection cables		
APS-K0200	0302066	●
APS-K0700	0302068	
Electronic processor		
APS-M1E	0302064	
Sensor		
APS-M1S	0302062	

ⓘ When using an APS system, for each gripper a mounting kit (AS-APS-M1), an APS-M1S sensor (incl. 3 m cable) as well as an electronics (APS-M1e) are required. An extension cable (APS-K) can be connected between the sensor and the electronics as an option. The max. cable length between the sensor and the electronics is 10 m, between the electronics and their control unit (PLC) it is max. 1 m.

Cylindrical reed switches

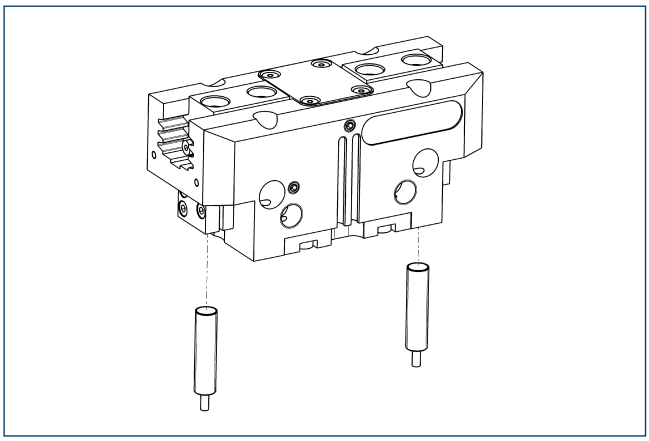

Limit position monitor can be mounted with mounting kit.

Description	ID	
Mounting kit for proximity switch		
AS-RMS 80 PGN/PZN-plus 160-380	0377727	
Reed switches		
RMS 80-S-M8	0377721	

ⓘ Two sensors (closer/S) are required for each unit, plus extension cables as an option. This mounting kit needs to be ordered optionally as an accessory. Two mounting kits are required per gripper. Please note the minimum permitted bending radii for the sensor cables, which are generally 35 mm.

PGN-plus 380

SCHUNK Grippers pneumatic | 2-Finger Parallel Grippers | Universal Gripper

Gripping force, O.D. gripping

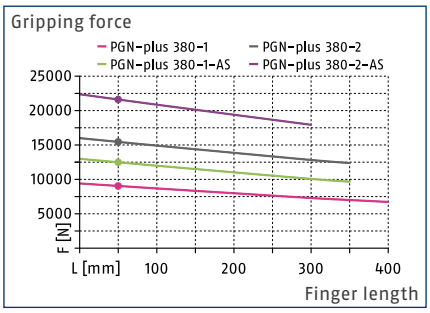

Gripping force, I.D. gripping

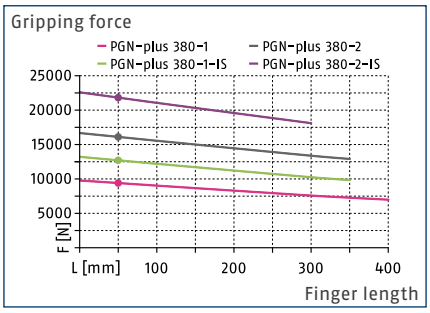

Finger load

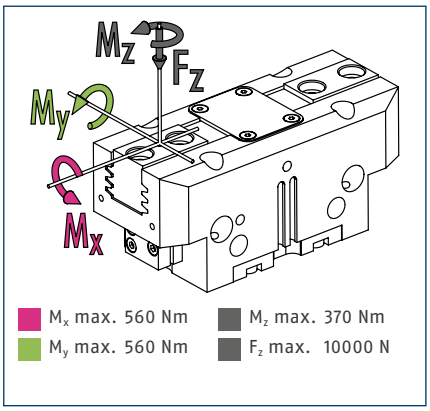

ⓘ The indicated moments and forces are static values, apply per base jaw and may occur simultaneously. M_y may arise in addition to the moment generated by the gripping force itself. If the max. permitted finger weight is exceeded, it is impreative to throttle the air supply so that the jaw movement occurs without any hitting or bouncing. Service life may be reduced.

Technical data

Description		PGN-plus 380-1	PGN-plus 380-2	PGN-plus 380-1-AS	PGN-plus 380-2-AS	PGN-plus 380-1-IS	PGN-plus 380-2-IS
ID		0371107	0371157	0371407	0371457	0371467	0371477
Stroke per jaw	[mm]	45	26	45	26	45	26
Closing- / opening force	[N]	9050/9400	15450/16100	12350/-	21150/-	-/12700	-/21800
min. spring force	[N]			3300	5700	3300	5700
Weight	[kg]	28	29	36.5	37.5	36.5	37.5
Recommended workpiece weight	[kg]	47	80.5	47	80.5	47	80.5
Fluid consumption per double stroke	[cm³]	2275	2275	2705	2705	3175	3175
min. / max. operating pressure	[bar]	2.5/8	2.5/8	4/6.5	4/6.5	4/6.5	4/6.5
Nominal operating pressure	[bar]	6	6	6	6	6	6
Closing- / opening time	[s]	0.6/0.6	0.6/0.6	0.5/0.8	0.5/0.8	0.8/0.5	0.8/0.5
Closing- / opening time only with spring	[s]			0.80	0.80	0.80	0.80
max. permitted finger length	[mm]	400	350	350	300	350	300
max. permitted weight per finger	[kg]	17	17	17	17	17	17
IP class		40	40	40	40	40	40
min. / max. ambient temperature	[°C]	5/90	5/90	5/90	5/90	5/90	5/90
Repeat accuracy	[mm]	0.05	0.05	0.05	0.05	0.05	0.05
Cleanroom class ISO 14644-1		5	5	5	5	5	5
Options and their characteristics							
Dust-tight version		37371107	37371157	37371407	37371457	37371467	37371477
IP class		64	64	64	64	64	64
Weight	[kg]	30	31	38.5	39.5	38.5	39.5
Anti-corrosion version		38371107	38371157	38371407	38371457	38371467	38371477
High-temperature version		39371107	39371157	39371407	39371457	39371467	39371477
min. / max. ambient temperature	[°C]	5/130	5/130	5/130	5/130	5/130	5/130
Precision version		0371130	0371180	0371430	0371445		

ⓘ The full gripping force according to the data table is only realised after around 100 gripping cycles.

Main view

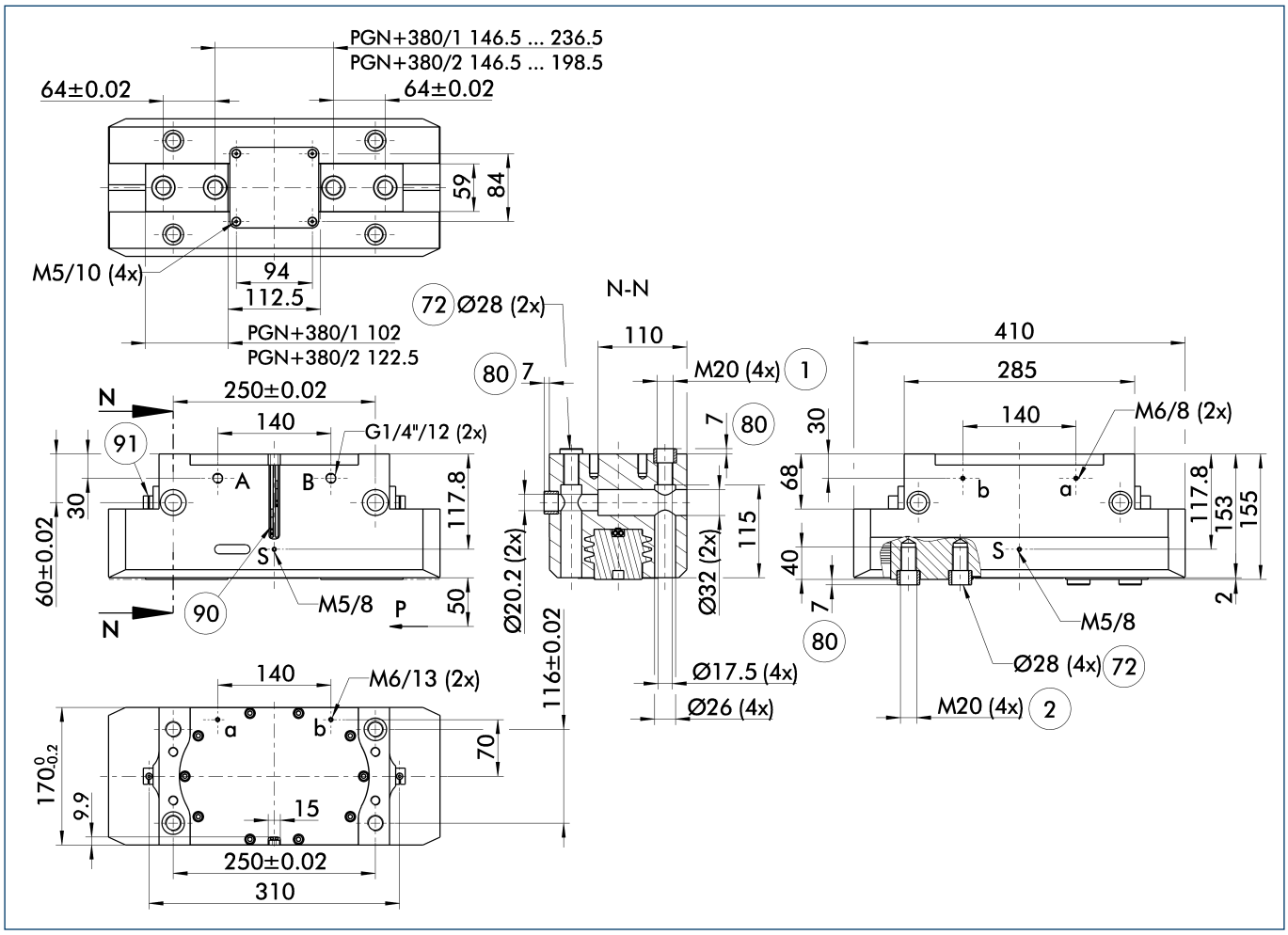

The drawing shows the gripper in the basic version with closed jaws, without dimensional consideration of the options described below.

ⓘ The SDV-P pressure maintenance valve can also be used for I.D. or O.D. gripping alternatively or in addition to the spring-loaded, mechanical gripping force maintenance device (see catalog section on "Accessories").

A, a Main / direct connection, gripper opening

B, b Main / direct connection, gripper closing

S Air purge connection (0.5 ... 1 bar)

(1) Gripper connection

(2) Finger connection

(72) Fit for centering sleeves

(80) Depth of the centering sleeve hole in the mating part

(90) MMS 22... sensor

(91) IN ... sensor

Maximum permitted finger projection

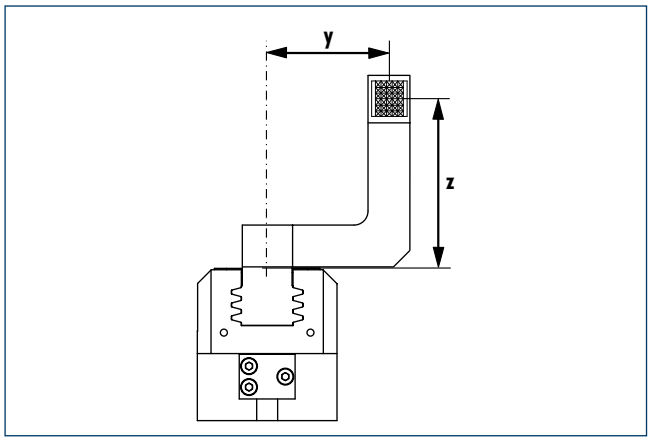

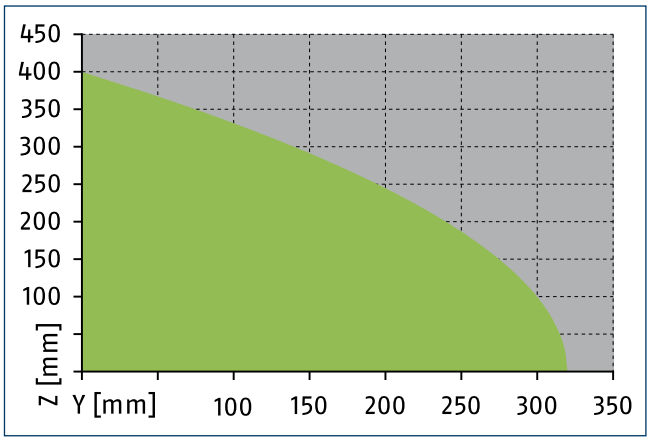

Permitted range

Inadmissible range

The curve applies for the base version (Stroke -1). For other versions, the curve must be offset in parallel corresponding to the max. permissible finger length.

Hose-free direct connection M6

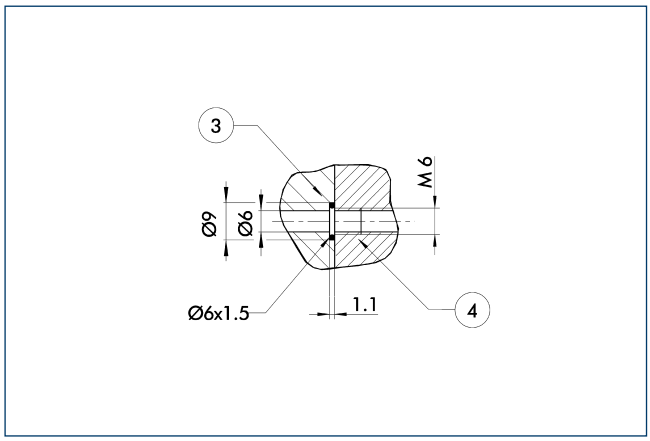

3 Adapter

4 Gripper

The direct connection is used for supplying compressed air without hoses. Instead, the pressure medium is fed through bore-holes in the mounting plate.

Gripping force maintenance device AS / IS

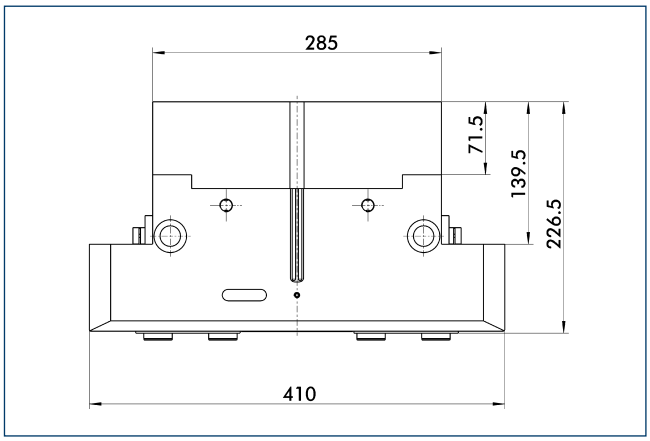

The mechanical maintenance of gripping force also assures a minimum gripping force in the case of a loss of pressure. With the AS / S variant, this acts as a closing force, and as an opening force for the IS variant. The maintenance of gripping force element can also be used as a means for increasing gripping force or for single actuated gripping.

Dust-tight version

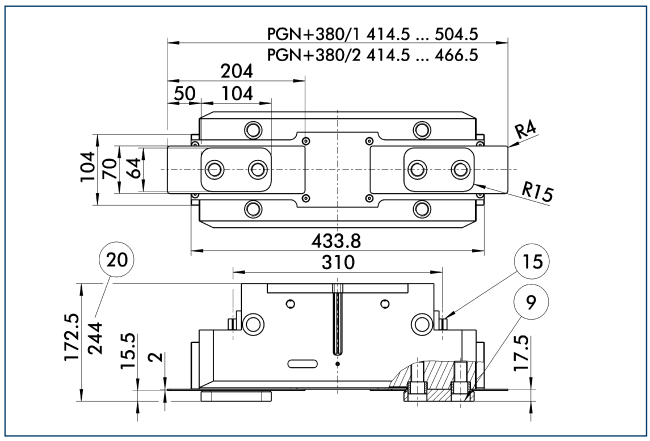

(9) For mounting screw connection diagram, see basic version
(15) Sealing bolt
(20) For AS / IS version

The "dust-protection" option increases the degree of protection against penetrating substances. The screw connection diagram shifts by the height of the intermediate jaw. The finger length is still measured from the upper edge of the gripper housing.

Precision version

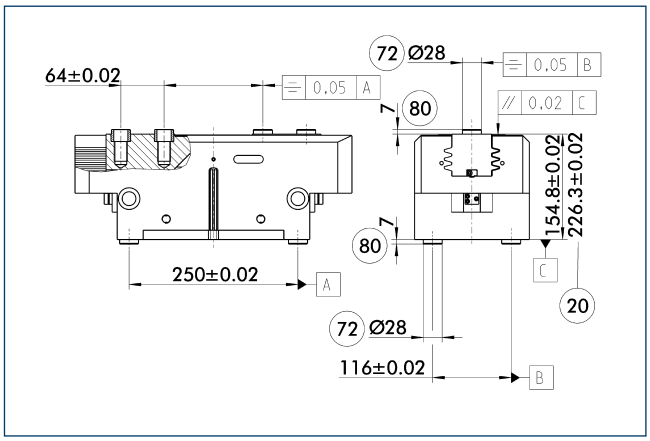

(20) For AS / IS version
(72) Fit for centering sleeves
(80) Depth of the centering sleeve hole in the mating part

The indicated tolerances just refer to the types of precision versions shown in the chart of technical specifications. All other types of precision versions are available on request.

SDV-P pressure maintenance valve

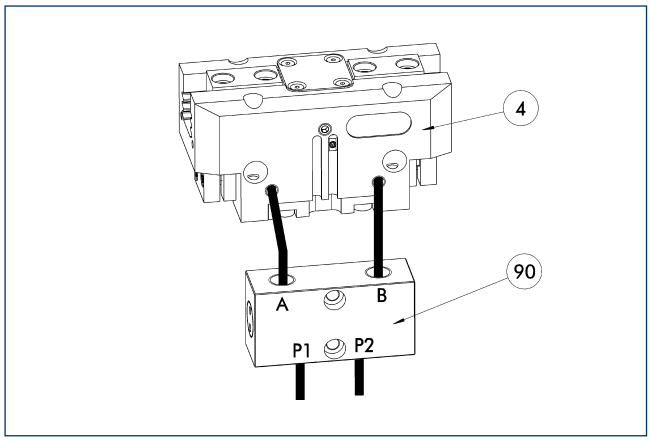

(4) Gripper
(90) SDV-P pressure maintenance valve

The SDV-P pressure maintenance valves ensure that the pressure in the piston chamber of pneumatic gripping, rotary, linear, and quick-change modules is maintained temporarily during an emergency stop.

Description	ID	
Pressure maintenance valve		
SDV-P 10	0300108	

Inductive proximity switches

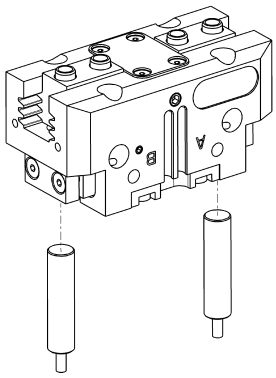

Directly mounted limit position monitor.

Description	ID	Often combined
Inductive proximity switches		
IN 80-S-M12	0301578	
IN 80-S-M8	0301478	●
INK 80-S	0301550	
Cable extensions		
KV BG12-SG12 3P-0030-PNP	0301999	
KV BG12-SG12 3P-0060-PNP	0301998	
KV BW08-SG08 3P-0030-PNP	0301495	
KV BW08-SG08 3P-0100-PNP	0301496	
KV BW08-SG08 3P-0200-PNP	0301497	●
KV BW12-SG12 3P-0030-PNP	0301595	
KV BW12-SG12 3P-0100-PNP	0301596	
KV BW12-SG12 3P-0200-PNP	0301597	
Clip for plug / socket		
CLI-M12	0301464	
CLI-M8	0301463	
Connection cables		
KA BG08-L 3P-0300-PNP	0301622	●
KA BG08-L 3P-0500-PNP	0301623	
KA BG12-L 3P-0500-PNP	30016369	
KA BW08-L 3P-0300-PNP	0301594	
KA BW08-L 3P-0500-PNP	0301502	
KA BW12-L 3P-0300-PNP	0301503	
KA BW12-L 3P-0500-PNP	0301507	
Sensor distributor		
V2-M8	0301775	●
V2-M12	0301776	●
V4-M12	0301747	
V4-M8	0301746	
V8-M12	0301752	
V8-M8	0301751	

ⓘ Two sensors (closer/S) are required for each unit, plus extension cables as an option. Please note the minimum permitted bending radii for the sensor cables, which are generally 35 mm.

Flexible position sensor

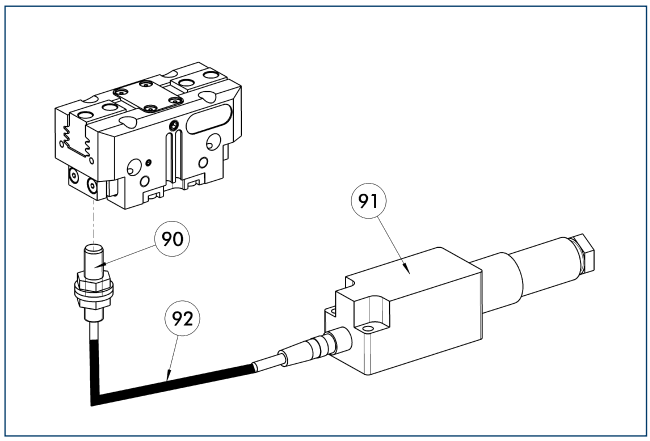

(90) FPS-S sensor
(91) FPS-F5 / -F5 T electronic processor
(92) Cable extensions

Flexible position monitoring of up to five positions.

Description	ID	Often combined
Mounting kit for FPS		
AS-FPS-PGN-plus 380-2	0301645	
Electronic processor		
FPS-F5	0301805	●
FPS-F5 T	0301807	
Sensor		
FPS-S M8	0301704	
Clip for plug / socket		
CLI-M8	0301463	

ⓘ When using a FPS system, a FPS sensor (FPS-S) and a control unit (FPS-F5 / F5 T) are required for each gripper as well as a mounting kit (AS), if listed. Cable extensions (KV) are available as options in the "Accessories" catalog section.

MMS electronic magnetic switches

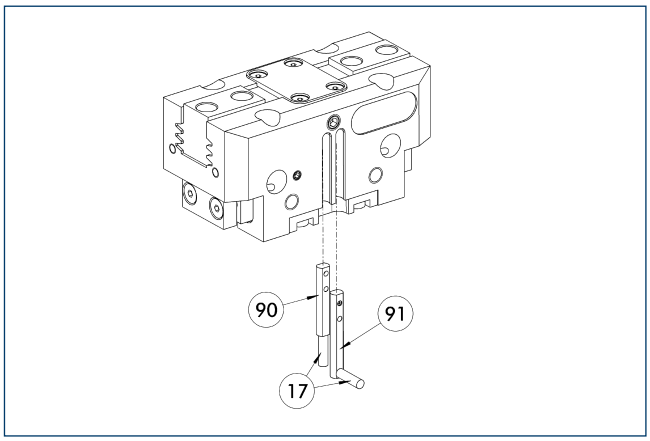

(17) Cable outlet
(90) MMS 22... sensor
(91) MMS 22...-SA sensor

End position monitoring for mounting in the C-slot.

Description	ID	Often combined
MMS electronic magnetic switches		
MMS 22-S-M8-PNP	0301032	●
MMSK 22-S-PNP	0301034	
MMS electronic magnetic switches with lateral cable outlet		
MMS 22-S-M8-PNP-SA	0301042	●
MMSK 22-S-PNP-SA	0301044	
Reed switches		
RMS 22-S-M8	0377720	●
Cable extensions		
KV BW08-SG08 3P-0030-PNP	0301495	
KV BW08-SG08 3P-0100-PNP	0301496	
KV BW08-SG08 3P-0200-PNP	0301497	●
Clip for plug / socket		
CLI-M8	0301463	
Connection cables		
KA BG08-L 3P-0300-PNP	0301622	●
KA BG08-L 3P-0500-PNP	0301623	
KA BW08-L 3P-0300-PNP	0301594	
KA BW08-L 3P-0500-PNP	0301502	
RSS radio sensor system		
RSS-T2	0377710	
Sensor distributor		
V2-M8	0301775	●
V4-M8	0301746	
V8-M8	0301751	

ⓘ Two sensors (closer/S) are required for each unit, plus extension cables as an option. Please note the minimum permitted bending radii for the sensor cables, which are generally 35 mm.

MMS PI1 programmable magnetic switches

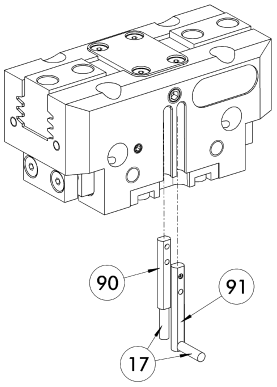

(17) Cable outlet
(90) MMS 22...-PI1-... sensor
(91) MMS 22...-PI1-...-SA sensor

Position query with one programmable position per sensor and electronics integrated in sensor. Programmable via MT magnet teaching tool (included in the scope of delivery) or ST plug teaching tool (optional). Limit position query mounted in C-groove. If the ST plug teaching tools are listed in the table, teaching can only take place with the ST plug teaching tools.

Description	ID	Often combined
MMS PI1 programmable magnetic switches		
MMS 22-PI1-S-M8-PNP	0301160	●
MMSK 22-PI1-S-PNP	0301162	
MMS PI1-HD programmable magnetic switches with stainless steel housing		
MMS 22-PI1-S-M8-PNP-HD	0301110	●
MMSK 22-PI1-S-PNP-HD	0301112	
MMS PI1 programmable magnetic switches with lateral cable outlet		
MMS 22-PI1-S-M8-PNP-SA	0301166	●
MMSK 22-PI1-S-PNP-SA	0301168	

ⓘ Two sensors (closer/S) are required for each unit, plus extension cables as an option. Please note the minimum permitted bending radii for the sensor cables, which are generally 35 mm. Connection cable, cable extensions, and sensor distributors can be found in the table for the MMS 22.

APS-Z80 analog position sensor

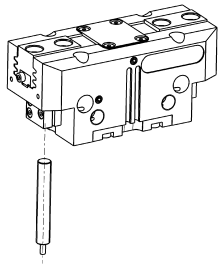

Contactlessly measuring, analog multi-position monitoring for any number of positions.

Description	ID	Often combined
Mounting kit for APS-Z80		
AS-APS-Z80-PGZN-plus 380-1	0302101	
AS-APS-Z80-PGZN-plus 380-2	0302119	
Sensor		
APS-Z80-K	0302072	
APS-Z80-M8	0302070	●

ⓘ When using an APS system, one mounting kit (AS-APS-Z80) and one APS-Z80 sensor is required per gripper.

APS-M1 analog position sensor

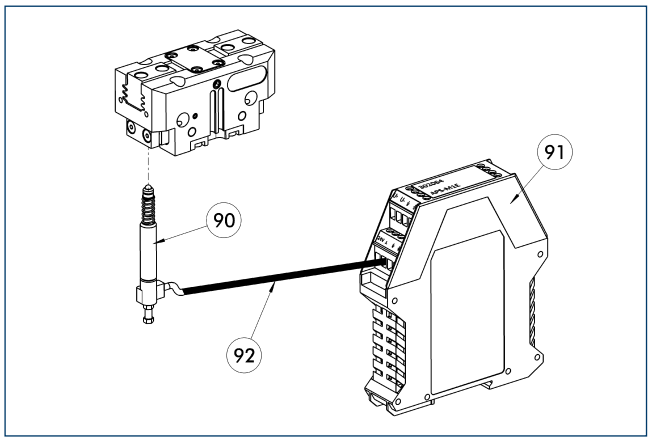

90 APS-M1S sensor
91 APS-M1E electronic processor
92 APS-K extension cable

Analog multi position monitoring for any desired positions.

Description	ID	Often combined
Mounting kit for APS-M1		
AS-APS-M1-PGZN-plus 200-1/380-2	0302085	
AS-APS-M1-PGZN-plus 380-1	0302090	
Connection cables		
APS-K0200	0302066	●
APS-K0700	0302068	
Electronic processor		
APS-M1E	0302064	
Sensor		
APS-M1S	0302062	

ⓘ When using an APS system, for each gripper a mounting kit (AS-APS-M1), an APS-M1S sensor (incl. 3 m cable) as well as an electronics (APS-M1e) are required. An extension cable (APS-K) can be connected between the sensor and the electronics as an option. The max. cable length between the sensor and the electronics is 10 m, between the electronics and their control unit (PLC) it is max. 1 m.

Cylindrical reed switches

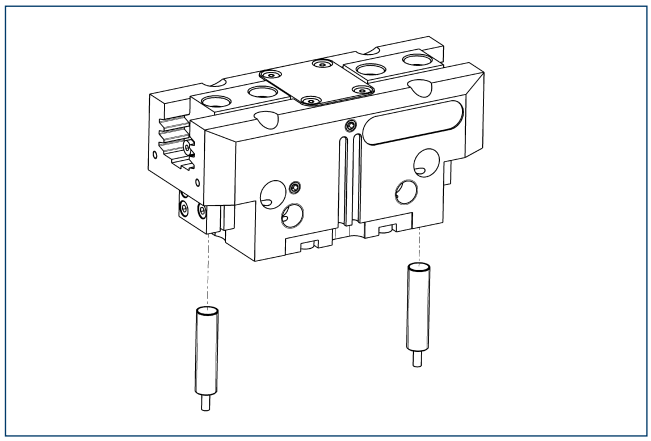

Limit position monitor can be mounted with mounting kit.

Description	ID	
Mounting kit for proximity switch		
AS-RMS 80 PGN/PZN-plus 160-380	0377727	
Reed switches		
RMS 80-S-M8	0377721	

ⓘ Two sensors (closer/S) are required for each unit, plus extension cables as an option. This mounting kit needs to be ordered optionally as an accessory. Two mounting kits are required per gripper. Please note the minimum permitted bending radii for the sensor cables, which are generally 35 mm.

Loadable. Reliable. Compact.
JGP Universal Gripper

Universal cost-efficient parallel gripper of the compact class with T-slot guidance

Field of Application

Optimal standard solution for many fields of application. Universal application in clean and slightly dirty surroundings in machine building and plant building industry, assembly and handling as well as automotive industry.

Advantages – Your benefit

A firm focus on the essentials for maximum profitability

Sturdy T-slot guidance for the precise handling of all kinds of workpieces

Compact dimensions and low weight for minimal interfering contours in handling

High maximum moments possible suitable for using long gripper fingers

Wedge-hook design for high power transmission and synchronized gripping

Comprehensive sensor accessories for interrogation and control of the stroke position

Mounting from two gripper sides for universal and flexible gripper assembly

Air supply via hose-free direct connection or screw connections for flexible pressure supply in all automated systems

Sizes	Weight	Gripping force	Stroke per jaw	Workpiece weight
Quantity: 10	0.08 .. 17.5 kg	123 .. 7400 N	2 .. 35 mm	0.62 .. 30 kg

Functional Description

The oval piston is moved up or down by compressed air.
The angled active surfaces of the wedge-hook produce a synchronized, parallel jaw motion.

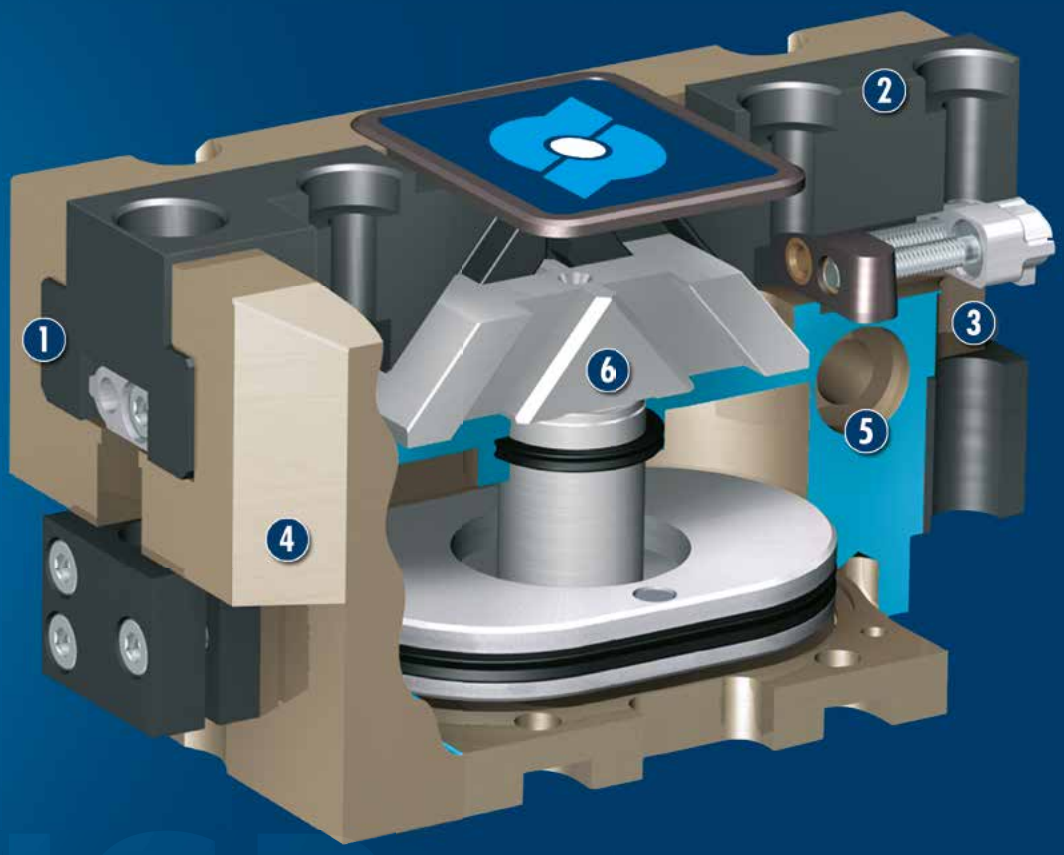

① **T-slot guidance**
Loadable, robust base jaw guidance for extremely long gripper fingers

② **Base jaw**
for the connection of workpiece-specific gripper fingers

③ **Sensor system**
Proximity switch can be assembled without mounting kit

④ **Housing**
Weight-optimized through application of high-strength aluminum alloy

⑤ **Centering and mounting possibilities**
for universal assembly of the gripper

⑥ **Wedge-hook design**
for high power transmission and centric gripping

CAD data, operating manuals and other current product documents are available at **www.schunk.com**

General Notes about the Series

Operating principle: Wedge-hook kinematics

Housing material: Aluminum alloy, anodized

Base jaw material: Steel

Actuation: pneumatic, with filtered compressed air as per DIN ISO 8573-1: 7 4 4

Warranty: 24 months (details, general terms and conditions and operating manuals can be downloaded at www.schunk.com)

Scope of delivery: Mount for proximity switch, centering sleeves, O-rings for direct connection, assembly and operating manual with declaration of incorporation.

Gripping force maintenance device: possible with variants with mechanical maintenance of gripping force or SDV-P pressure maintenance valve

Gripping force: is the arithmetic total of the gripping force applied to each gripper jaw at distance P (see illustration).

Finger length: is measured from the upper edge of the gripper housing in the direction of the main axis. The breach of the max. permitted finger length can bring higher abrasion. The maximum permissible finger length applies up to the nominal operating pressure. With higher pressures, the finger length must be reduced proportionally to the nominal operating pressure.

Repeat accuracy: is defined as the spread of the limit position after 100 consecutive strokes.

Workpiece weight: is calculated for a force-fit connection with a coefficient of friction of 0.1 and a safety factor of 2 against slippage of the workpiece on acceleration due to gravity g. Considerably heavier workpiece weights are permitted with form-fit gripping.

Closing and opening times: are purely the times that the base jaws or fingers are in motion. Valve switching times, hose filling times or PLC reaction times are not included in the above times and must be taken into consideration when determining cycle times.

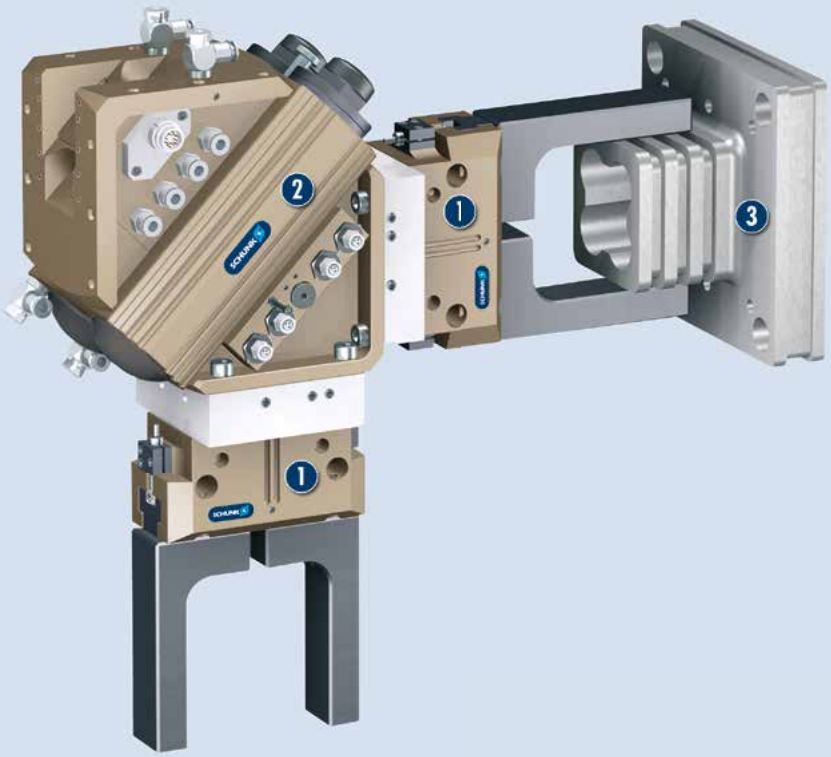

Application example

Supply and assembly devices

1. JGP 2-Finger Parallel Gripper with workpiece-specific gripper fingers
2. SRH-plus Swivel Head
3. Workpiece

SCHUNK offers more ...

The following components make the product JGP even more productive – the suitable addition for the highest functionality, flexibility, reliability, and controlled production.

TCU Tolerance Compensation Unit

Compensation Unit

Magnetic Switches

Inductive Proximity Switches

Sensor Distributor

Jaw Quick-change System

Switching Valve

Universal Intermediate Jaw

SDV-P Pressure Maintenance Valve

Finger Blanks with Jaw Quick-change System

Force Measuring Jaws

Analog Position Sensor

ⓘ Further information regarding the products can be found on the following product pages or at www.schunk.com. Please contact us for further information: SCHUNK technical hotline +49-7133-103-2696

Options and special Information

Gripping force maintenance version AS / IS: The mechanical gripping force maintenance version ensures a minimum gripping force also in the case of a drop in pressure. In the AS / S version this has the effect of a closing force, in the IS version of an opening force.
The JGP series is especially suitable for economic handling solutions and distinguishes by its high cost-benefit ratio.

JGP 40

SCHUNK Grippers pneumatic | 2-Finger Parallel Grippers | Universal Gripper

Gripping force, O.D. gripping

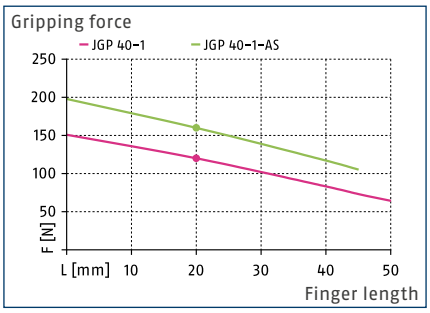

Gripping force, I.D. gripping

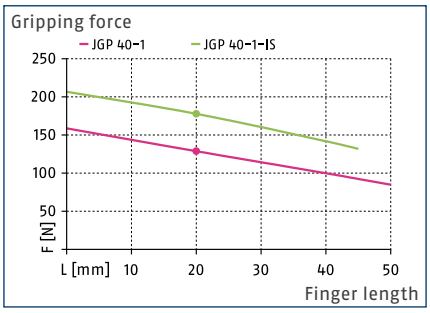

Finger load

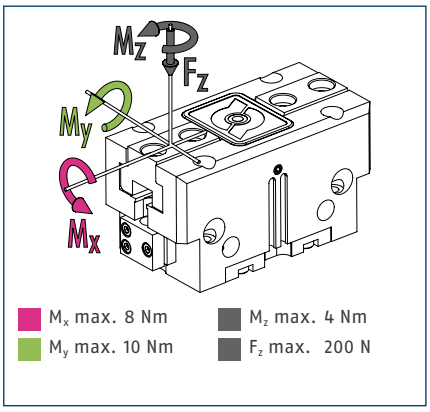

ⓘ The indicated moments and forces are static values, apply per base jaw and may occur simultaneously. M_y may arise in addition to the moment generated by the gripping force itself. If the max. permitted finger weight is exceeded, it is impreative to throttle the air supply so that the jaw movement occurs without any hitting or bouncing. Service life may be reduced.

Technical data

Description		JGP 40-1	JGP 40-1-AS	JGP 40-1-IS
ID		0308600	0308601	0308602
Stroke per jaw	[mm]	2.5	2.5	2.5
Closing- / opening force	[N]	123/132	163/-	-/182
min. spring force	[N]		40	50
Weight	[kg]	0.08	0.09	0.09
Recommended workpiece weight	[kg]	0.62	0.62	0.62
Fluid consumption per double stroke	[cm³]	2.5	4.5	5.5
min. / max. operating pressure	[bar]	2.5/8	4/6.5	4/6.5
Nominal operating pressure	[bar]	6	6	6
Closing- / opening time	[s]	0.02/0.02	0.02/0.03	0.03/0.02
Closing- / opening time only with spring	[s]		0.05	0.05
max. permitted finger length	[mm]	50	45	45
max. permitted weight per finger	[kg]	0.1	0.1	0.1
IP class		40	40	40
min. / max. ambient temperature	[°C]	5/90	5/90	5/90
Repeat accuracy	[mm]	0.01	0.01	0.01

Main view

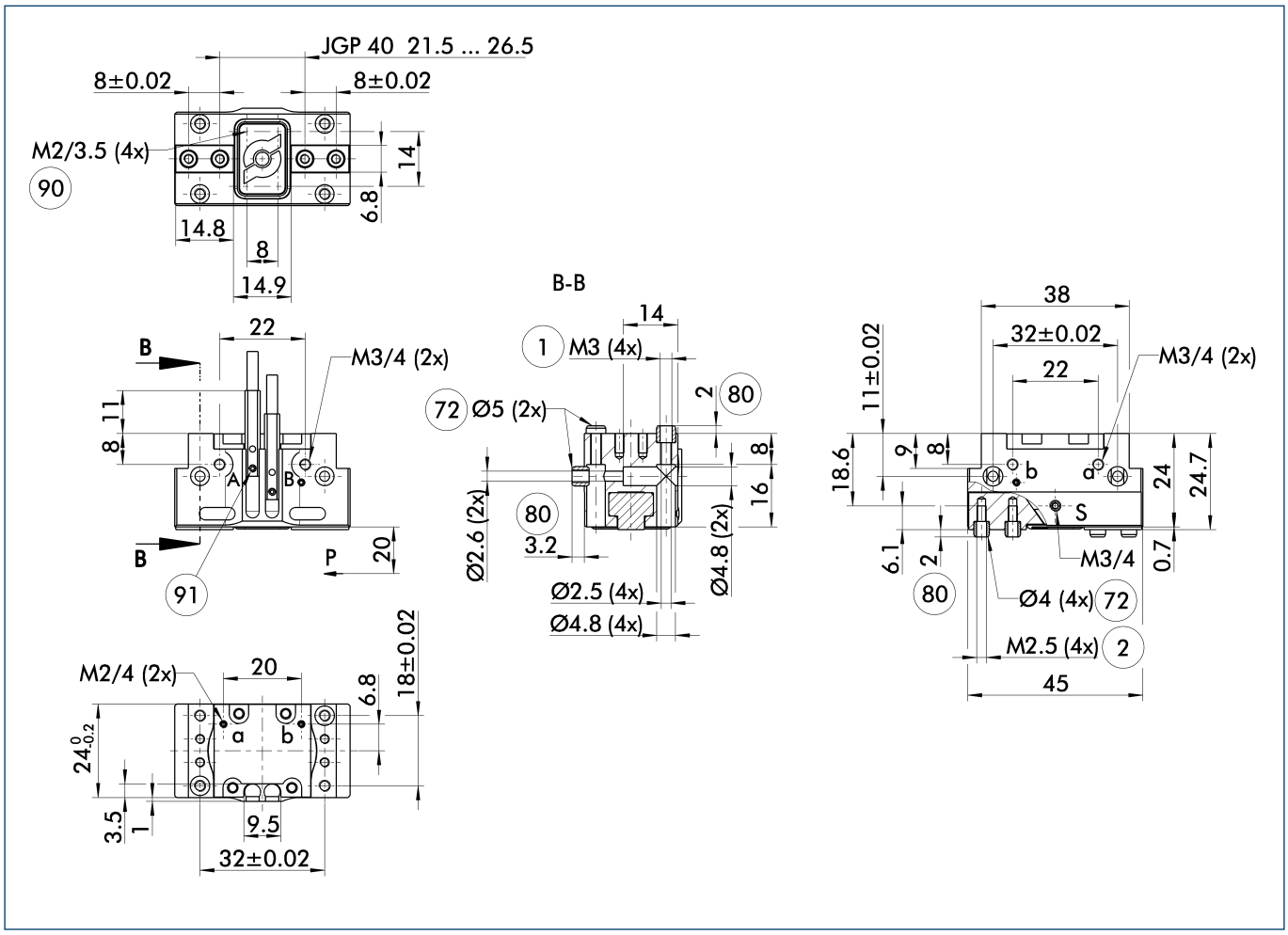

The drawing shows the gripper in the basic version with closed jaws, without dimensional consideration of the options described below.

ⓘ The SDV-P pressure maintenance valve can also be used for I.D. or O.D. gripping alternatively or in addition to the spring-loaded, mechanical gripping force maintenance device (see catalog section on "Accessories").

A, a Main / direct connection, gripper opening

B, b Main / direct connection, gripper closing

S Air purge connection (0.5 ... 1 bar)

(1) Gripper connection

(2) Finger connection

(72) Fit for centering sleeves

(80) Depth of the centering sleeve hole in the mating part

(90) Thread below the cover for fastening external attachments

(91) MMS 22... sensor

Maximum permitted finger projection

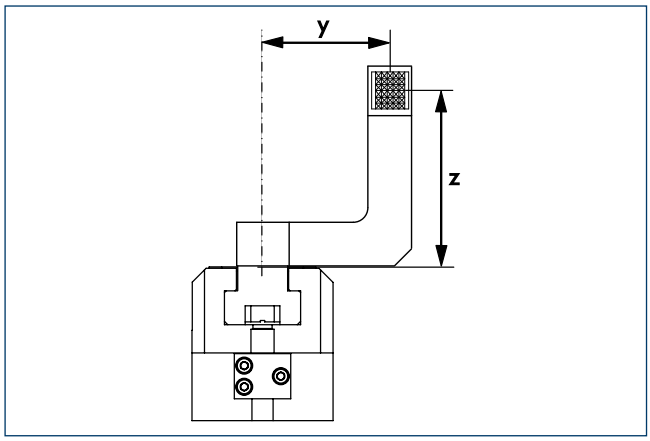

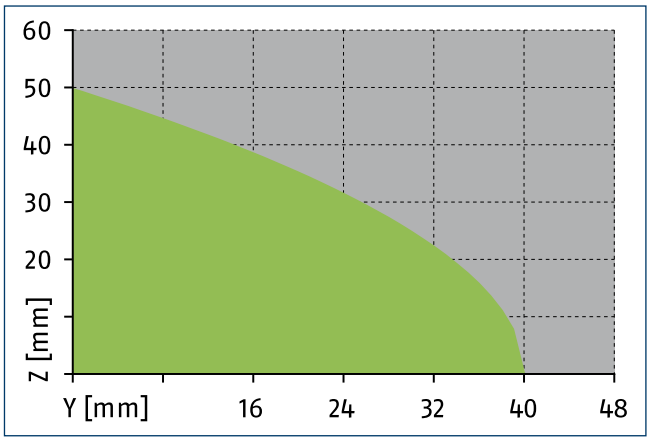

Permitted range

Inadmissible range

The curve applies for the base version (Stroke -1). For other versions, the curve must be offset in parallel corresponding to the max. permissible finger length.

Hose-free direct connection M2

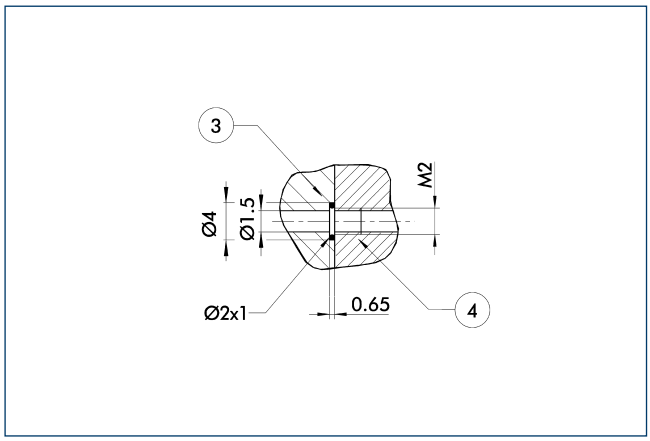

(3) Adapter (4) Gripper

The direct connection is used for supplying compressed air without hoses. Instead, the pressure medium is fed through bore-holes in the mounting plate.

Gripping force maintenance device AS / IS

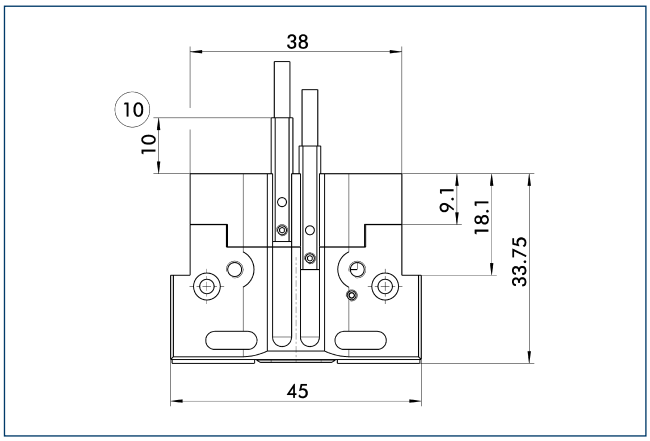

(10) Projection applies only for AS version

The mechanical maintenance of gripping force also assures a minimum gripping force in the case of a loss of pressure. With the AS / S variant, this acts as a closing force, and as an opening force for the IS variant. The maintenance of gripping force element can also be used as a means for increasing gripping force or for single actuated gripping.

SDV-P pressure maintenance valve

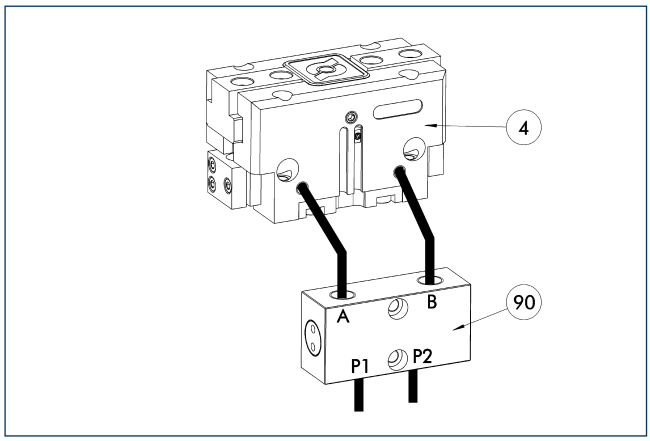

(4) Gripper
(90) SDV-P pressure maintenance valve

The SDV-P pressure maintenance valves ensure that the pressure in the piston chamber of pneumatic gripping, rotary, linear, and quick-change modules is maintained temporarily during an emergency stop.

Description	ID	
Pressure maintenance valve		
SDV-P 04	0403130	

ABR- / SBR-PGZN-plus 40 finger blanks

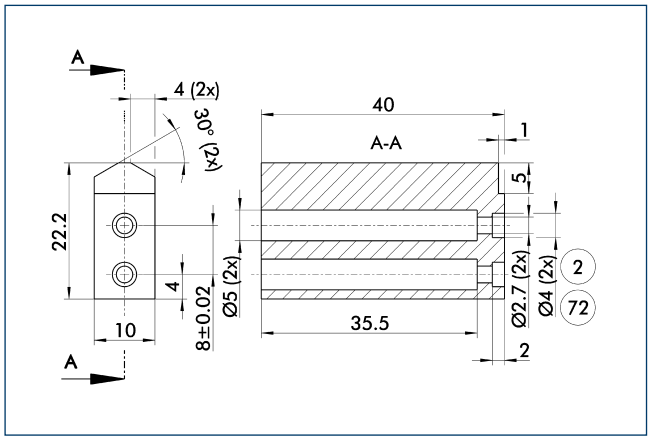

(2) Finger connection
(72) Fit for centering sleeves

Finger blanks for customized subsequent machining.

Description	ID	Material	Scope of delivery
Finger blanks			
ABR-PGZN-plus 40	0300008	Aluminum	1
SBR-PGZN-plus 40	0300018	16MnCr5	1

UZB 40 universal intermediate jaw

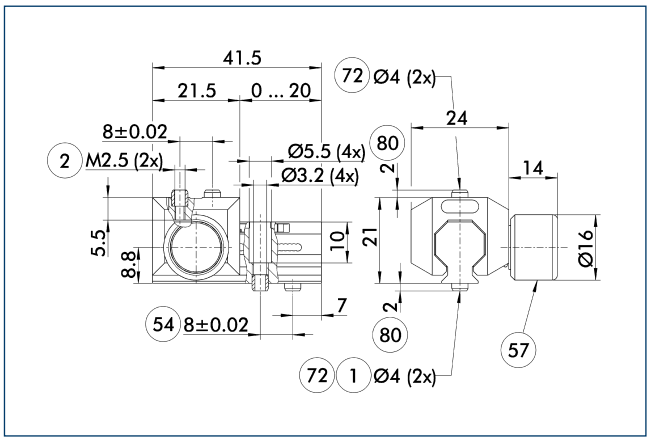

(1) Gripper connection
(2) Finger connection
(54) Optional right or left connection
(57) Locking
(72) Fit for centering sleeves
(80) Depth of the centering sleeve hole in the mating part

The universal intermediate jaw allows fast tool-free and reliable plugging and shifting of top jaws at the gripper.

Description	ID	Grid dimension [mm]
Universal intermediate jaw		
UZB 40	0300040	1
Finger blanks		
ABR-PGZN-plus 40	0300008	
SBR-PGZN-plus 40	0300018	

OAS-PGN-plus 40 object distance sensor

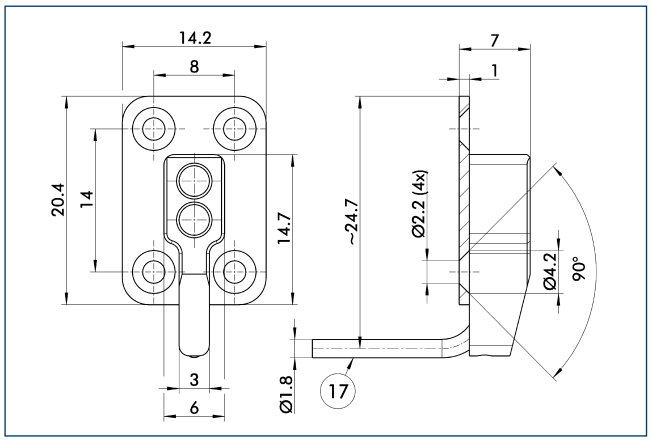

(17) Cable outlet

Description	ID	
Object distance sensor		
OAS-PGN-plus 40	0308875	

Attachment valves

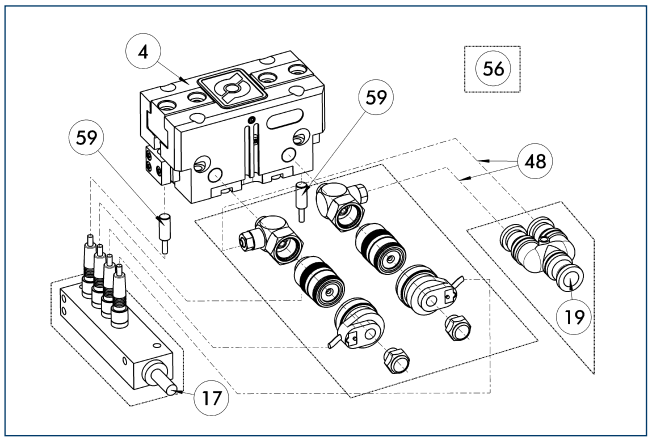

(4) Gripper
(17) Cable outlet
(19) Air connection
(48) Hose
(56) Included in delivery
(59) Monitoring gripping

For each unit one attachment valve ABV is required, optional with distributor for sensors and valves. Attachment valves increase the efficiency, reduce the installation work and air consumption and simplify air supply. For details please refer to the "Accessories" catalog section.

Description	ID	Often combined
Attachment valves		
ABV-MV15-M3	0303322	
ABV-MV15-M3-V2-M8	0303384	
ABV-MV15-M3-V4-M8	0303354	●
ABV-MV15-M3-V8-M8	0303355	

Object distance sensor

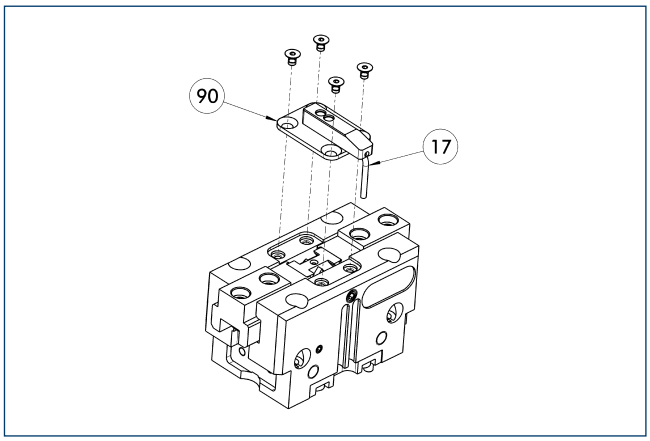

(17) Cable outlet
(90) OAS

Optical distance and presence sensor for direct mounting on the gripper. One OAS sensor per gripper can be assembled.

Description	ID	
Object distance sensor		
OAS-PGN-plus 40	0308875	
Electronic processor		
OAS-V09-D	0308865	
OAS-V10-A	0308867	
OAS-V10-D	0308866	

ⓘ The evaluation of the OAS can be done with either an analog or digital evaluation unit and with or without a display. The states which should be detected can be simply taught.

Modular assembly automation

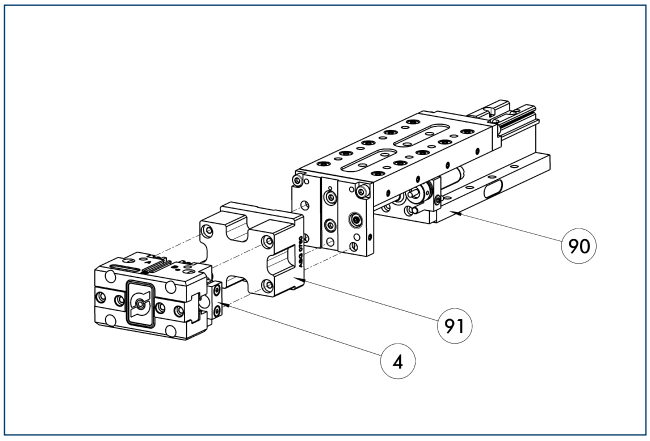

(4) Gripper
(90) CLM / KLM / LM / ELM / ELS / HLM linear module
(91) ASG adapter plate

Gripper and linear modules can be combined with standard adapters out of the modular assembly system. For more information see our catalog "Modular Assembly Automation".

MMS electronic magnetic switches

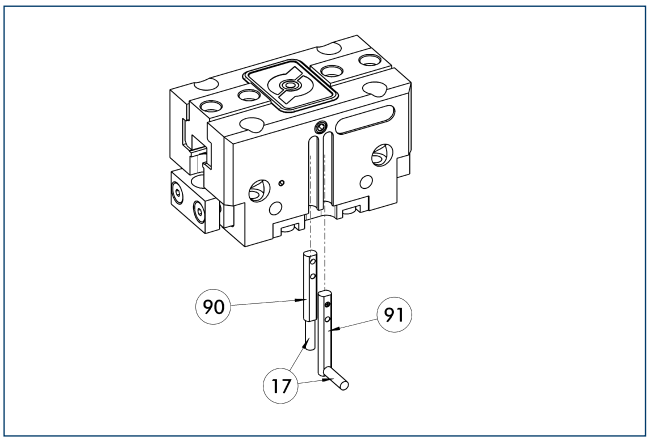

17 Cable outlet
91 MMS 22...-SA sensor
90 MMS 22... sensor

End position monitoring for mounting in the C-slot.

Description	ID	Often combined
MMS electronic magnetic switches		
MMS 22-S-M8-PNP	0301032	●
MMSK 22-S-PNP	0301034	
MMS electronic magnetic switches with lateral cable outlet		
MMS 22-S-M8-PNP-SA	0301042	●
MMSK 22-S-PNP-SA	0301044	
Cable extensions		
KV BW08-SG08 3P-0030-PNP	0301495	
KV BW08-SG08 3P-0100-PNP	0301496	
KV BW08-SG08 3P-0200-PNP	0301497	●
Clip for plug / socket		
CLI-M8	0301463	
Connection cables		
KA BG08-L 3P-0300-PNP	0301622	●
KA BG08-L 3P-0500-PNP	0301623	
KA BW08-L 3P-0300-PNP	0301594	
KA BW08-L 3P-0500-PNP	0301502	
Sensor distributor		
V2-M8	0301775	●
V4-M8	0301746	
V8-M8	0301751	

ⓘ Two sensors (closer/S) are required for each unit, plus extension cables as an option. Please note the minimum permitted bending radii for the sensor cables, which are generally 35 mm.

MMS PI1 programmable magnetic switches

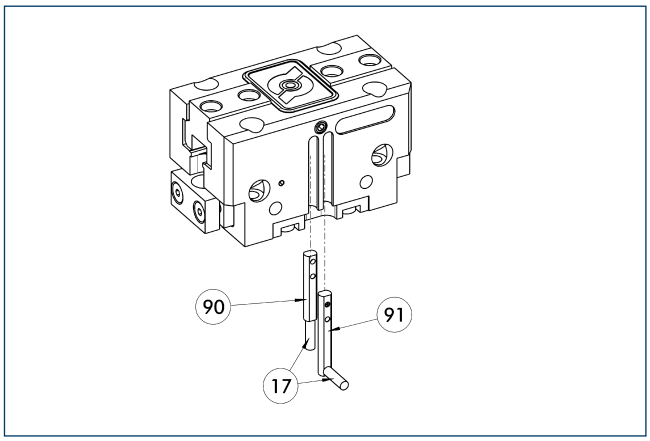

17 Cable outlet
91 MMS 22...-PI1-...-SA sensor
90 MMS 22...-PI1-... sensor

Position query with one programmable position per sensor and electronics integrated in sensor. Programmable via MT magnet teaching tool (included in the scope of delivery) or ST plug teaching tool (optional). Limit position query mounted in C-groove. If the ST plug teaching tools are listed in the table, teaching can only take place with the ST plug teaching tools.

Description	ID	Often combined
MMS PI1 programmable magnetic switches		
MMS 22-PI1-S-M8-PNP	0301160	●
MMSK 22-PI1-S-PNP	0301162	
MMS PI1-HD programmable magnetic switches with stainless steel housing		
MMS 22-PI1-S-M8-PNP-HD	0301110	●
MMSK 22-PI1-S-PNP-HD	0301112	
MMS PI1 programmable magnetic switches with lateral cable outlet		
MMS 22-PI1-S-M8-PNP-SA	0301166	●
MMSK 22-PI1-S-PNP-SA	0301168	

ⓘ Two sensors (closer/S) are required for each unit, plus extension cables as an option. Please note the minimum permitted bending radii for the sensor cables, which are generally 35 mm. Connection cable, cable extensions, and sensor distributors can be found in the table for the MMS 22.

MMS PI2 programmable magnetic switches

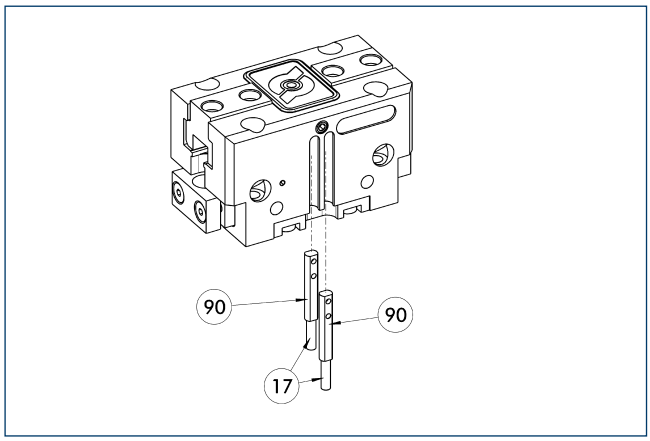

17 Cable outlet

90 MMS 22...-PI2-... sensor

Position query with two programmable positions per sensor and electronics integrated in sensor. Programmable via MT magnet teaching tool (included in the scope of delivery) or ST plug teaching tool (optional). Limit position query mounted in C-groove. If the ST plug teaching tools are listed in the table, teaching can only take place with the ST plug teaching tools.

Description	ID	Often combined
MMS PI2 programmable magnetic switches		
MMS 22-PI2-S-M8-PNP	0301180	●
MMSK 22-PI2-S-PNP	0301182	
MMS PI2-HD programmable magnetic switches with stainless steel housing		
MMS 22-PI2-S-M8-PNP-HD	0301130	●
MMSK 22-PI2-S-PNP-HD	0301132	

ⓘ Per unit one sensor (closer/S) is required, optionally a cable extension. Please note the minimum permitted bending radii for the sensor cables, which are generally 35 mm. Connection cable, cable extensions, and sensor distributors can be found in the table for the MMS-P 22.

MMS-P programmable magnetic switches

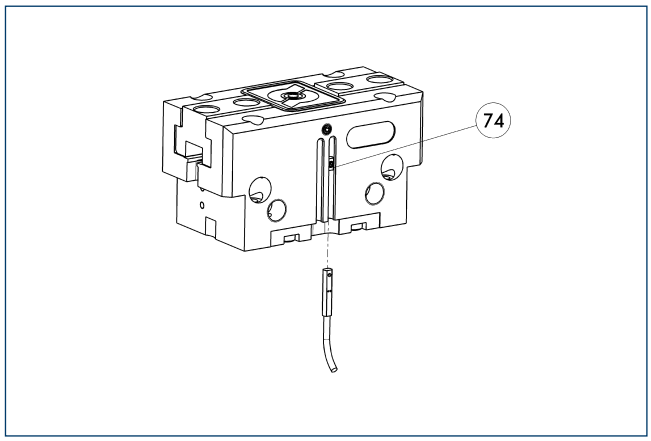

74 Stop for MMS-P

Position monitoring with two programmable positions per sensor. The end position monitoring is mounted in the C-slot.

Description	ID	Often combined
MMS-P programmable magnetic switches		
MMSK-P 22-S-PNP	0301371	
MMS-P 22-S-M8-PNP	0301370	●
Clip for plug / socket		
CLI-M8	0301463	
Connection cables		
KA BG08-L 4P-0500	0307767	●
KA BG08-L 4P-1000	0307768	
KA BW08-L 4P-0500	0307765	
KA BW08-L 4P-1000	0307766	
Sensor distributor		
V2-M8-4P-2XM8-3P	0301380	

ⓘ Per unit one sensor (closer/S) is required, optionally a cable extension. Please note the minimum permitted bending radii for the sensor cables, which are generally 35 mm.

JGP 50

SCHUNK Grippers pneumatic | 2-Finger Parallel Grippers | Universal Gripper

Gripping force, O.D. gripping

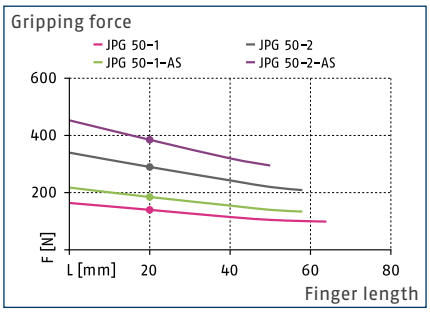

Gripping force, I.D. gripping

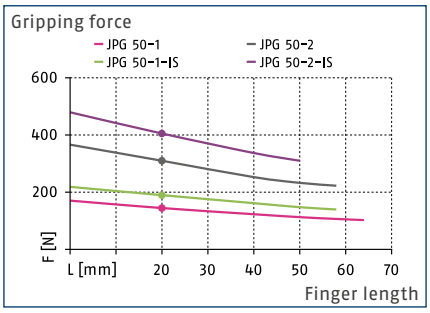

Finger load

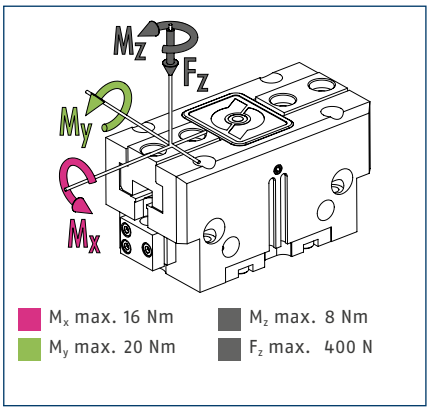

ⓘ The indicated moments and forces are static values, apply per base jaw and may occur simultaneously. M_y may arise in addition to the moment generated by the gripping force itself. If the max. permitted finger weight is exceeded, it is impreative to throttle the air supply so that the jaw movement occurs without any hitting or bouncing. Service life may be reduced.

Technical data

Description		JGP 50-1	JGP 50-2	JGP 50-1-AS	JGP 50-2-AS	JGP 50-1-IS	JGP 50-2-IS
ID		0308610	0308615	0308611	0308616	0308612	0308617
Stroke per jaw	[mm]	4	2	4	2	4	2
Closing- / opening force	[N]	140/145	290/310	185/-	385/-	-/190	-/405
min. spring force	[N]			45	95	45	95
Weight	[kg]	0.15	0.15	0.2	0.2	0.2	0.21
Recommended workpiece weight	[kg]	0.7	1.45	0.7	1.45	0.7	1.45
Fluid consumption per double stroke	[cm³]	5	5	8.5	8.5	11	11
min. / max. operating pressure	[bar]	2.5/8	2.5/8	4/6.5	4/6.5	4/6.5	4/6.5
Nominal operating pressure	[bar]	6	6	6	6	6	6
Closing- / opening time	[s]	0.02/0.02	0.02/0.02	0.02/0.03	0.02/0.03	0.03/0.02	0.03/0.02
Closing- / opening time only with spring	[s]			0.05	0.05	0.05	0.05
max. permitted finger length	[mm]	64	58	58	50	58	50
max. permitted weight per finger	[kg]	0.18	0.18	0.18	0.18	0.18	0.18
IP class		40	40	40	40	40	40
min. / max. ambient temperature	[°C]	5/90	5/90	5/90	5/90	5/90	5/90
Repeat accuracy	[mm]	0.01	0.01	0.01	0.01	0.01	0.01

Main view

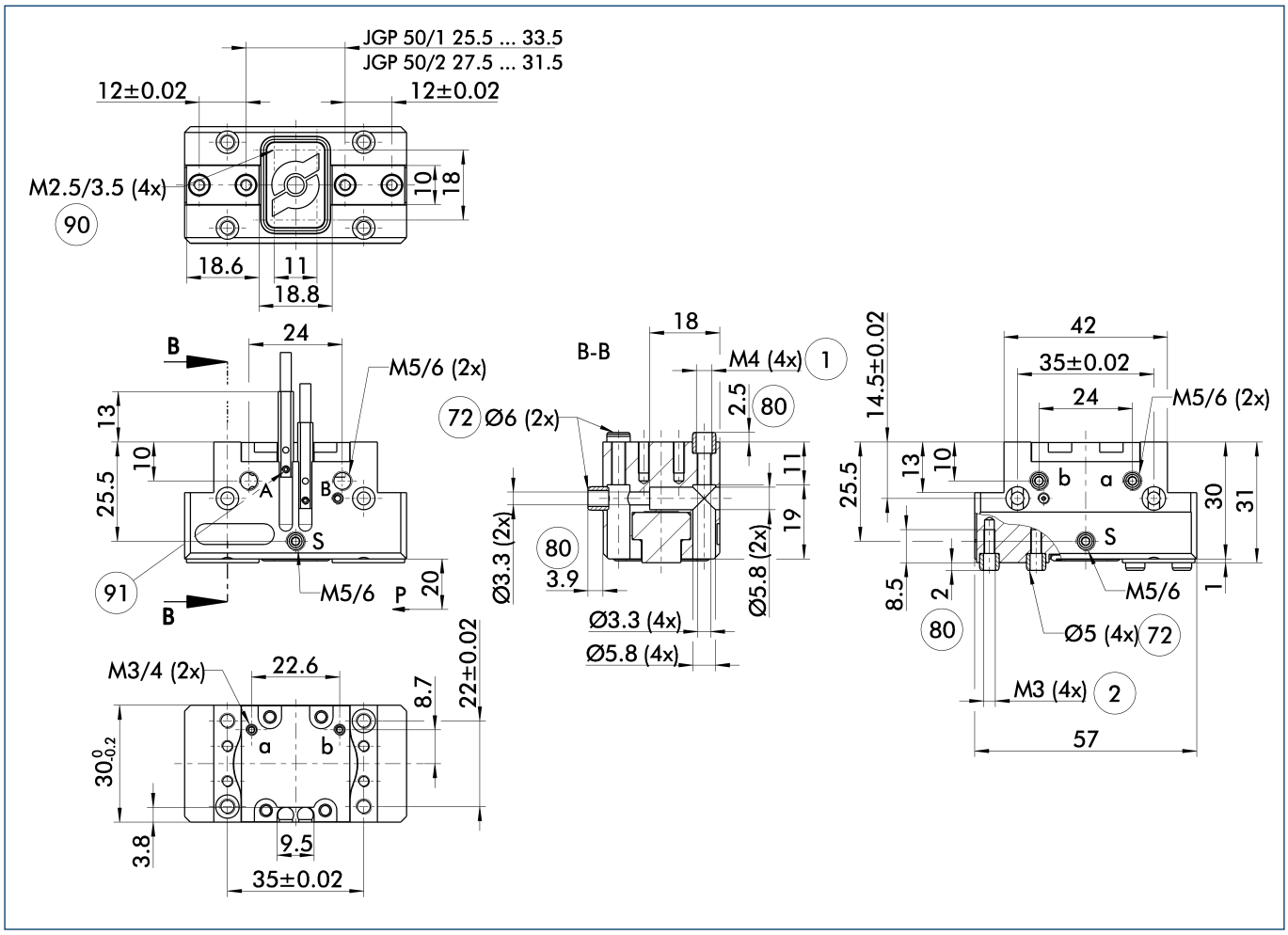

The drawing shows the gripper in the basic version with closed jaws, without dimensional consideration of the options described below.

ⓘ The SDV-P pressure maintenance valve can also be used for I.D. or O.D. gripping alternatively or in addition to the spring-loaded, mechanical gripping force maintenance device (see catalog section on "Accessories").

A, a Main / direct connection, gripper opening

B, b Main / direct connection, gripper closing

S Air purge connection (0.5 ... 1 bar)

(1) Gripper connection

(2) Finger connection

(72) Fit for centering sleeves

(80) Depth of the centering sleeve hole in the mating part

(90) Thread below the cover for fastening external attachments

(91) MMS 22... sensor

Maximum permitted finger projection

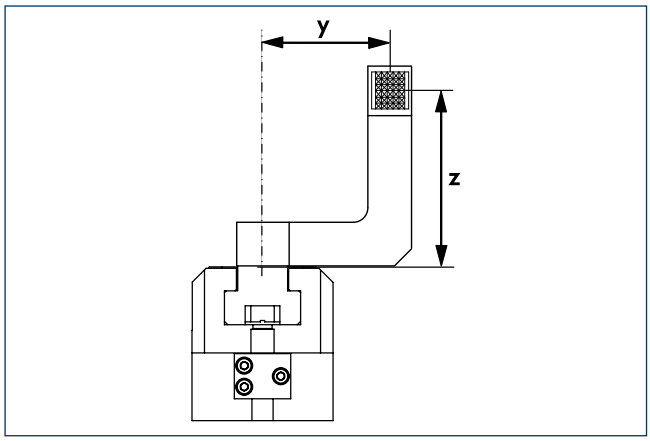

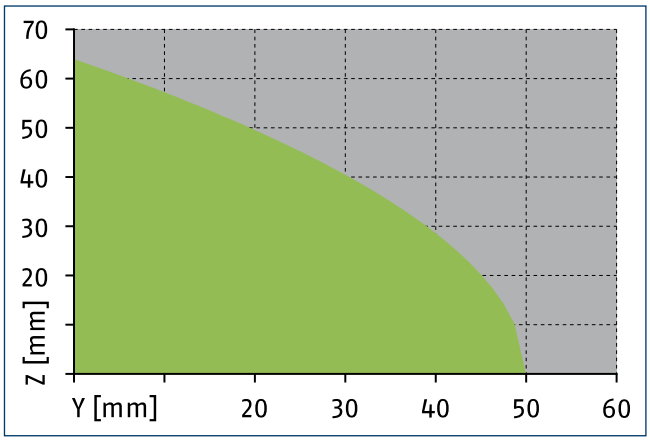

Permitted range

Inadmissible range

The curve applies for the base version (Stroke -1). For other versions, the curve must be offset in parallel corresponding to the max. permissible finger length.

Hose-free direct connection M3

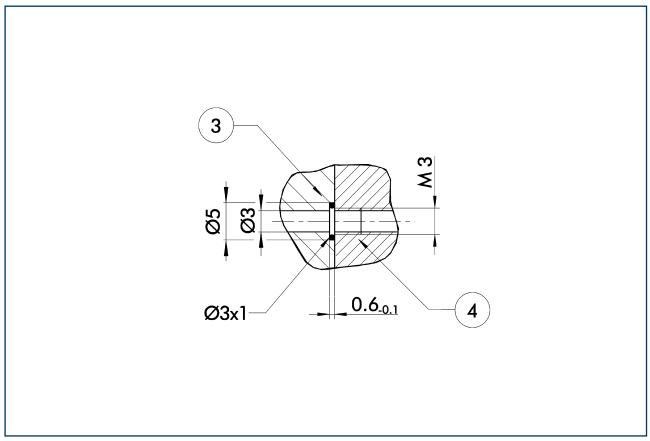

3 Adapter

4 Gripper

The direct connection is used for supplying compressed air without hoses. Instead, the pressure medium is fed through bore-holes in the mounting plate.

Gripping force maintenance device AS / IS

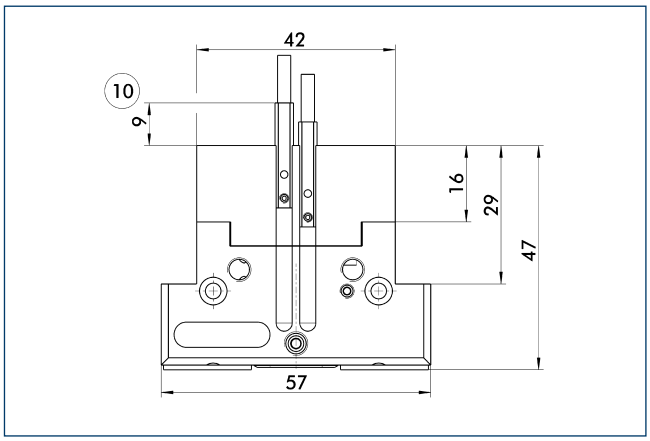

10 Projection applies only for AS version

The mechanical maintenance of gripping force also assures a minimum gripping force in the case of a loss of pressure. With the AS / S variant, this acts as a closing force, and as an opening force for the IS variant. The maintenance of gripping force element can also be used as a means for increasing gripping force or for single actuated gripping.

SDV-P pressure maintenance valve

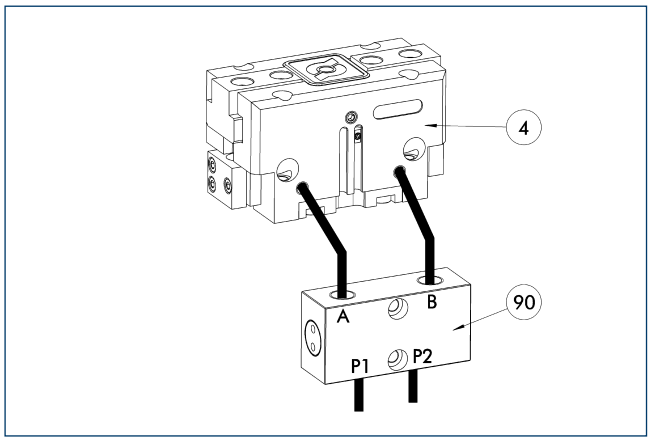

(4) Gripper
(90) SDV-P pressure maintenance valve

The SDV-P pressure maintenance valves ensure that the pressure in the piston chamber of pneumatic gripping, rotary, linear, and quick-change modules is maintained temporarily during an emergency stop.

Description	ID	
Pressure maintenance valve		
SDV-P 04	0403130	

ZBA L-plus 50 intermediate jaws

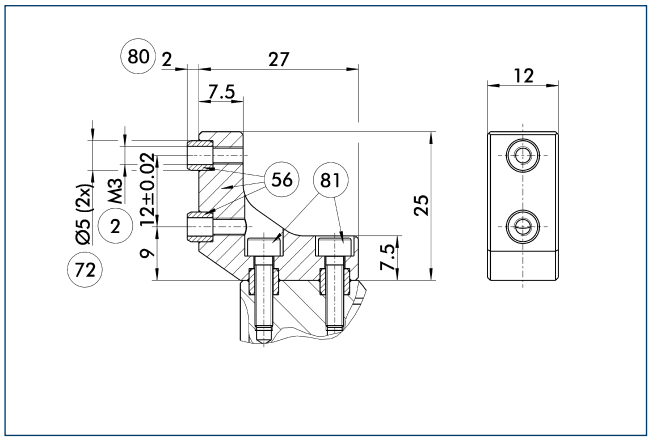

(2) Finger connection
(56) Included in delivery
(72) Fit for centering sleeves
(80) Depth of the centering sleeve hole in the mating part
(81) Not included in the scope of delivery

Optionally intermediate jaws can be used, enabling direct connection and alignment of top jaws and various standard accessories in Z-direction.

Description	ID	Material	Scope of delivery
Intermediate jaws			
ZBA-L-plus 50	0311712	Aluminum	1

BSWS jaw quick-change systems

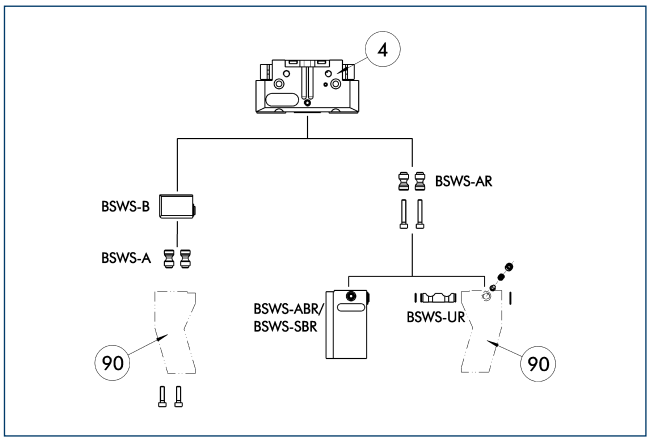

(4) Gripper
(90) Customized gripper fingers

There are various jaw quick-change systems available for the grippers. For detailed information, refer to the appropriate product.

Description	ID	
Jaw quick-change system adapter		
BSWS-AR 50	0300091	
BSWS-A 50	0303020	
Jaw quick-change system base		
BSWS-B 50	0303021	
Finger blanks with jaw quick-change system		
BSWS-ABR-PGZN-plus 50	0300071	
BSWS-SBR-PGZN-plus 50	0300081	
Jaw quick-change system reversed		
BSWS-UR 50	0302990	

ⓘ Only the systems listed in the table can be used.

UZB 50 universal intermediate jaw

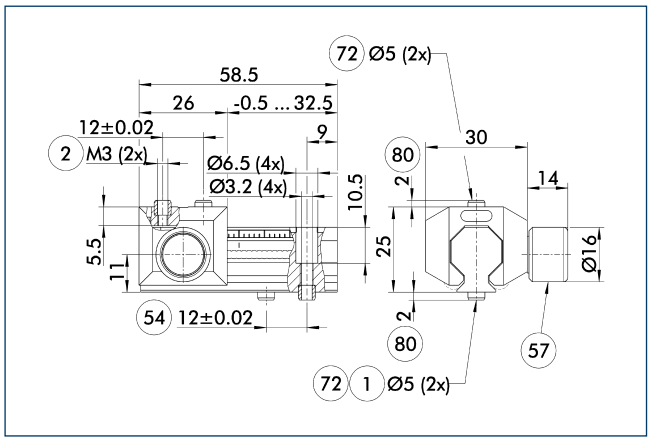

1 Gripper connection
2 Finger connection
54 Optional right or left connection
57 Locking
72 Fit for centering sleeves
80 Depth of the centering sleeve hole in the mating part

The universal intermediate jaw allows fast tool-free and reliable plugging and shifting of top jaws at the gripper.

Description	ID	Grid dimension [mm]
Universal intermediate jaw		
UZB 50	0300041	1.5
Finger blanks		
ABR-PGZN-plus 50	0300009	
SBR-PGZN-plus 50	0300019	

FMS-ZBA / ZBP 50 force-measuring jaws

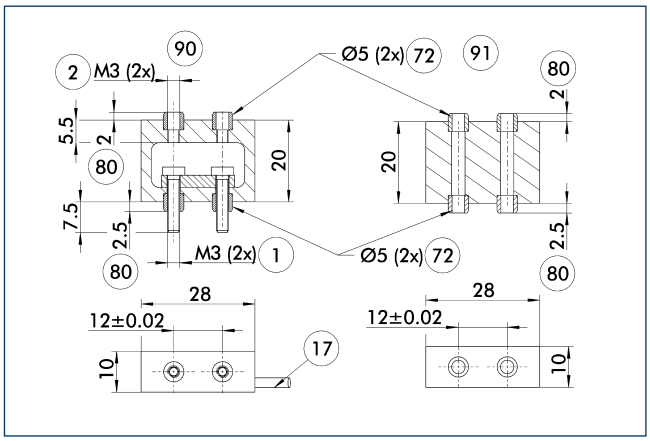

1 Gripper connection
2 Finger connection
17 Cable outlet
72 Fit for centering sleeves
80 Depth of the centering sleeve hole in the mating part
90 Active intermediate jaws
91 Passive intermediate jaws

Force measuring jaws measure gripping forces, but can also determine workpiece weights or dimensional deviations. There are active and passive intermediate jaws (FMS-ZBA or FMS-ZBP). At least one active force measuring jaw is required per gripper, the rest can be passive. For each active jaw, a FMS-A control unit and a FMS-AK connection cable are required.

Description	ID	Often combined
Active intermediate jaws		
FMS-ZBA 50	0301830	
Passive intermediate jaws		
FMS-ZBP 50	0301831	
Connection cables		
FMS-AK0200	0301820	●
FMS-AK0500	0301821	
FMS-AK1000	0301822	
FMS-AK2000	0301823	
Electronic processor		
FMS-A1	0301810	

ABR- / SBR-PGZN-plus 50 finger blanks

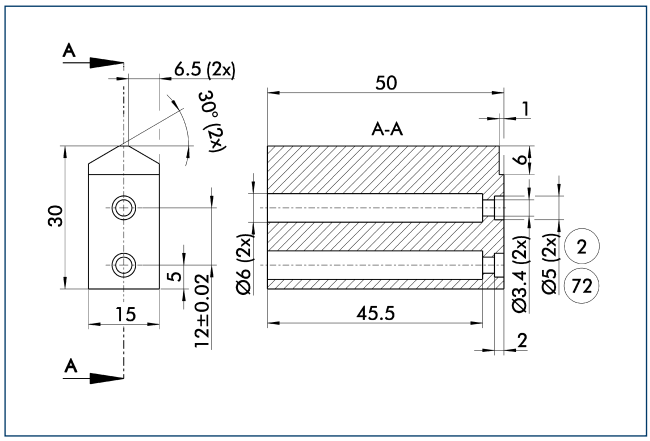

(2) Finger connection (72) Fit for centering sleeves

Finger blanks for customized subsequent machining.

Description	ID	Material	Scope of delivery
Finger blanks			
ABR-PGZN-plus 50	0300009	Aluminum	1
SBR-PGZN-plus 50	0300019	16MnCr5	1

OAS-PGN-plus 50 object distance sensor

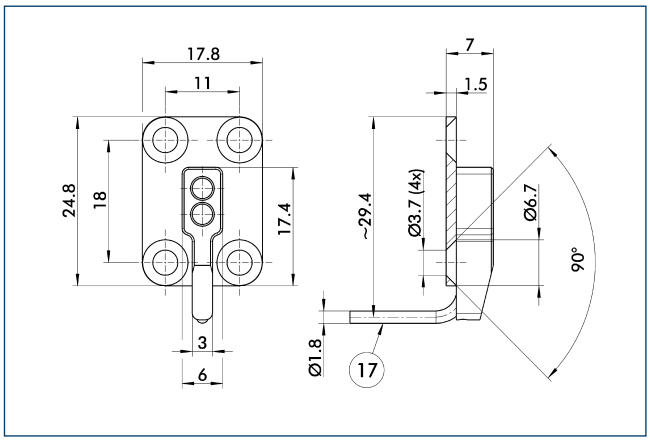

(17) Cable outlet

Description	ID	
Object distance sensor		
OAS-PGN-plus 50	0308876	

Object distance sensor

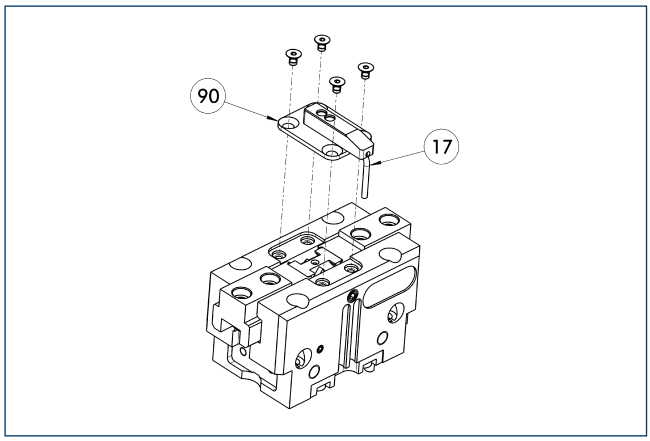

(17) Cable outlet (90) OAS

Optical distance and presence sensor for direct mounting on the gripper. One OAS sensor per gripper can be assembled.

Description	ID	
Object distance sensor		
OAS-PGN-plus 50	0308876	
Electronic processor		
OAS-V09-D	0308865	
OAS-V10-A	0308867	
OAS-V10-D	0308866	

ⓘ The evaluation of the OAS can be done with either an analog or digital evaluation unit and with or without a display. The states which should be detected can be simply taught.

Attachment valves

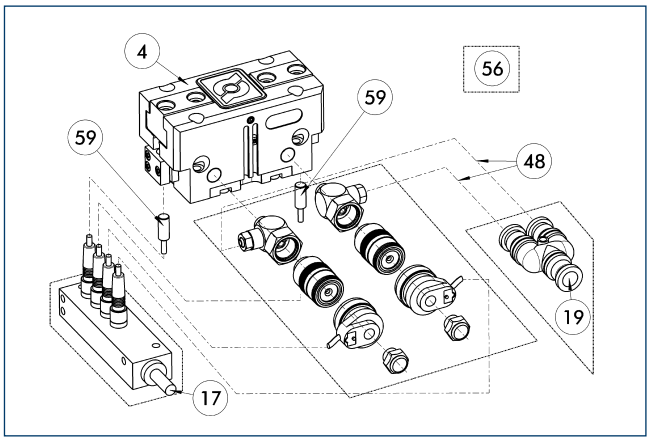

(4) Gripper (48) Hose
(17) Cable outlet (56) Included in delivery
(19) Air connection (59) Monitoring gripping

For each unit one attachment valve ABV is required, optional with distributor for sensors and valves. Attachment valves increase the efficiency, reduce the installation work and air consumption and simplify air supply. For details please refer to the "Accessories" catalog section.

Description	ID	Often combined
Attachment valves		
ABV-MV15-M5	0303323	
ABV-MV15-M5-V2-M8	0303386	
ABV-MV15-M5-V4-M8	0303356	●
ABV-MV15-M5-V8-M8	0303357	

Modular assembly automation

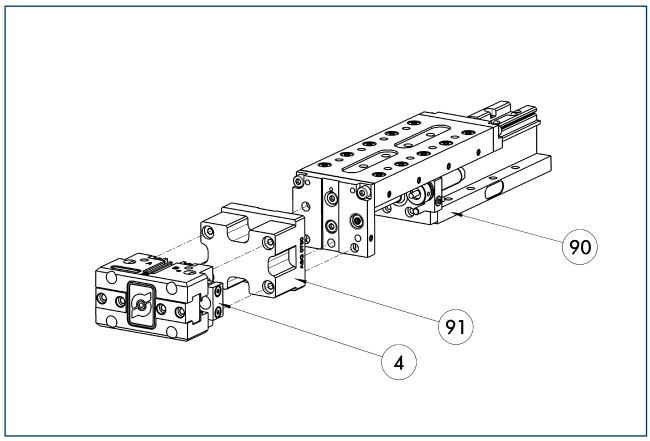

(4) Gripper
(91) ASG adapter plate
(90) CLM / KLM / LM / ELM / ELS / HLM linear module

Gripper and linear modules can be combined with standard adapters out of the modular assembly system. For more information see our catalog "Modular Assembly Automation".

MMS electronic magnetic switches

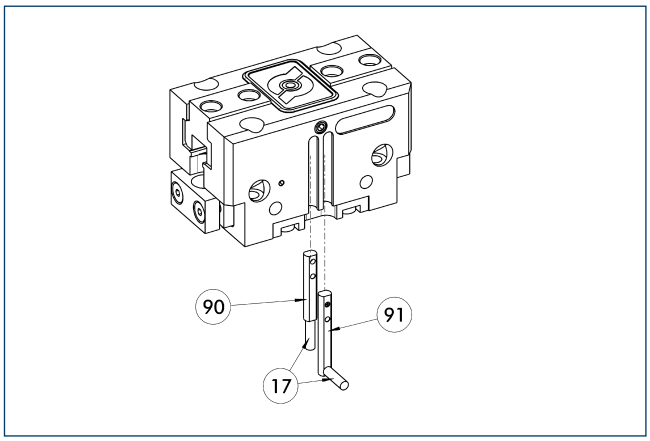

(17) Cable outlet
(91) MMS 22...-SA sensor
(90) MMS 22... sensor

End position monitoring for mounting in the C-slot.

Description	ID	Often combined
MMS electronic magnetic switches		
MMS 22-S-M8-PNP	0301032	●
MMSK 22-S-PNP	0301034	
MMS electronic magnetic switches with lateral cable outlet		
MMS 22-S-M8-PNP-SA	0301042	●
MMSK 22-S-PNP-SA	0301044	
Cable extensions		
KV BW08-SG08 3P-0030-PNP	0301495	
KV BW08-SG08 3P-0100-PNP	0301496	
KV BW08-SG08 3P-0200-PNP	0301497	●
Clip for plug / socket		
CLI-M8	0301463	
Connection cables		
KA BG08-L 3P-0300-PNP	0301622	●
KA BG08-L 3P-0500-PNP	0301623	
KA BW08-L 3P-0300-PNP	0301594	
KA BW08-L 3P-0500-PNP	0301502	
Sensor distributor		
V2-M8	0301775	●
V4-M8	0301746	
V8-M8	0301751	

ⓘ Two sensors (closer/S) are required for each unit, plus extension cables as an option. Please note the minimum permitted bending radii for the sensor cables, which are generally 35 mm.

MMS PI1 programmable magnetic switches

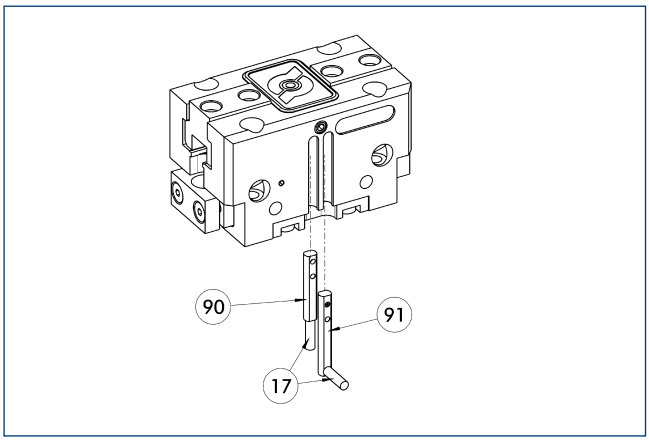

17 Cable outlet
91 MMS 22...-PI1-...-SA sensor
90 MMS 22...-PI1-... sensor

Position query with one programmable position per sensor and electronics integrated in sensor. Programmable via MT magnet teaching tool (included in the scope of delivery) or ST plug teaching tool (optional). Limit position query mounted in C-groove. If the ST plug teaching tools are listed in the table, teaching can only take place with the ST plug teaching tools.

Description	ID	Often combined
MMS PI1 programmable magnetic switches		
MMS 22-PI1-S-M8-PNP	0301160	●
MMSK 22-PI1-S-PNP	0301162	
MMS PI1-HD programmable magnetic switches with stainless steel housing		
MMS 22-PI1-S-M8-PNP-HD	0301110	●
MMSK 22-PI1-S-PNP-HD	0301112	
MMS PI1 programmable magnetic switches with lateral cable outlet		
MMS 22-PI1-S-M8-PNP-SA	0301166	●
MMSK 22-PI1-S-PNP-SA	0301168	

ⓘ Two sensors (closer/S) are required for each unit, plus extension cables as an option. Please note the minimum permitted bending radii for the sensor cables, which are generally 35 mm. Connection cable, cable extensions, and sensor distributors can be found in the table for the MMS 22.

MMS PI2 programmable magnetic switches

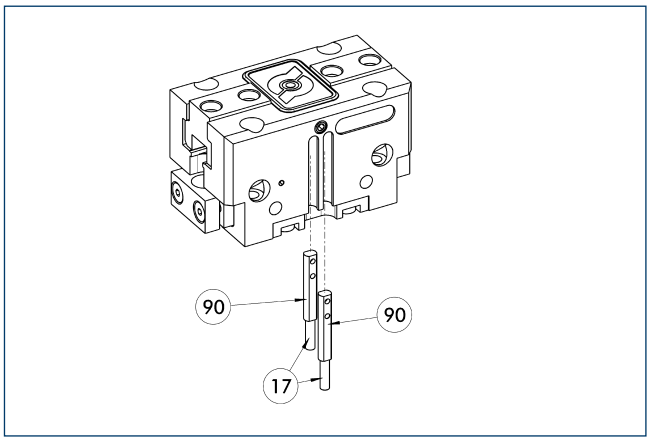

17 Cable outlet
90 MMS 22...-PI2-... sensor

Position query with two programmable positions per sensor and electronics integrated in sensor. Programmable via MT magnet teaching tool (included in the scope of delivery) or ST plug teaching tool (optional). Limit position query mounted in C-groove. If the ST plug teaching tools are listed in the table, teaching can only take place with the ST plug teaching tools.

Description	ID	Often combined
MMS PI2 programmable magnetic switches		
MMS 22-PI2-S-M8-PNP	0301180	●
MMSK 22-PI2-S-PNP	0301182	
MMS PI2-HD programmable magnetic switches with stainless steel housing		
MMS 22-PI2-S-M8-PNP-HD	0301130	●
MMSK 22-PI2-S-PNP-HD	0301132	

ⓘ Per unit one sensor (closer/S) is required, optionally a cable extension. Please note the minimum permitted bending radii for the sensor cables, which are generally 35 mm. Connection cable, cable extensions, and sensor distributors can be found in the table for the MMS-P 22.

MMS-P programmable magnetic switches

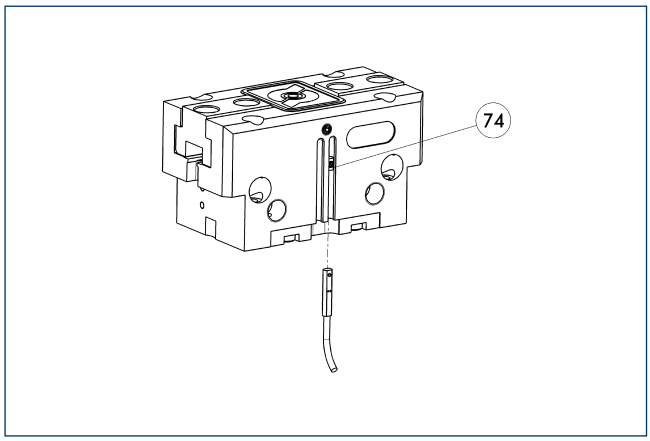

74 Stop for MMS-P

Position monitoring with two programmable positions per sensor. The end position monitoring is mounted in the C-slot.

Description	ID	Often combined
MMS-P programmable magnetic switches		
MMSK-P 22-S-PNP	0301371	
MMS-P 22-S-M8-PNP	0301370	●
Clip for plug / socket		
CLI-M8	0301463	
Connection cables		
KA BG08-L 4P-0500	0307767	●
KA BG08-L 4P-1000	0307768	
KA BW08-L 4P-0500	0307765	
KA BW08-L 4P-1000	0307766	
Sensor distributor		
V2-M8-4P-2XM8-3P	0301380	

ⓘ Per unit one sensor (closer/S) is required, optionally a cable extension. Please note the minimum permitted bending radii for the sensor cables, which are generally 35 mm.

JGP 64

SCHUNK Grippers pneumatic | 2-Finger Parallel Grippers | Universal Gripper

Gripping force, O.D. gripping

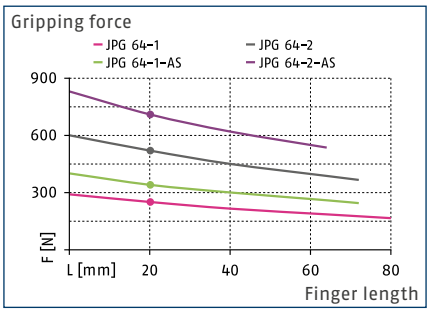

Gripping force, I.D. gripping

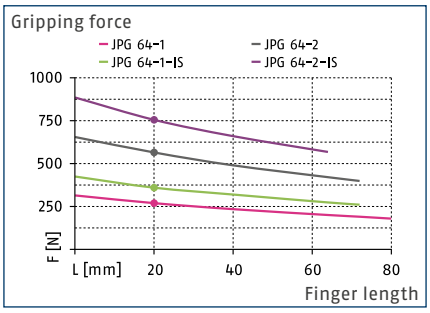

Finger load

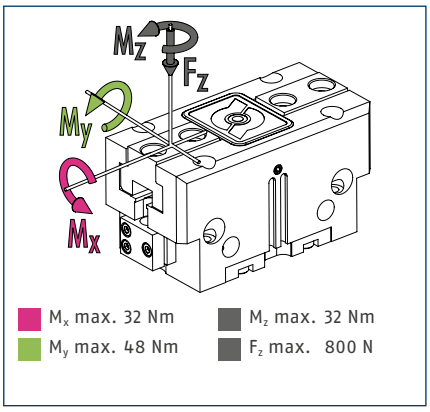

ⓘ The indicated moments and forces are static values, apply per base jaw and may occur simultaneously. M_y may arise in addition to the moment generated by the gripping force itself. If the max. permitted finger weight is exceeded, it is impreative to throttle the air supply so that the jaw movement occurs without any hitting or bouncing. Service life may be reduced.

Technical data

Description		JGP 64-1	JGP 64-2	JGP 64-1-AS	JGP 64-2-AS	JGP 64-1-IS	JGP 64-2-IS
ID		0308620	0308625	0308621	0308626	0308622	0308627
Stroke per jaw	[mm]	6	3	6	3	6	3
Closing- / opening force	[N]	250/270	520/565	340/-	710/-	-/360	-/755
min. spring force	[N]			90	190	90	190
Weight	[kg]	0.28	0.28	0.37	0.37	0.37	0.37
Recommended workpiece weight	[kg]	1.25	2.6	1.25	2.6	1.25	2.6
Fluid consumption per double stroke	[cm³]	10	10	17	17	21	21
min. / max. operating pressure	[bar]	2.5/8	2.5/8	4/6.5	4/6.5	4/6.5	4/6.5
Nominal operating pressure	[bar]	6	6	6	6	6	6
Closing- / opening time	[s]	0.03/0.03	0.03/0.03	0.02/0.04	0.02/0.04	0.04/0.02	0.04/0.02
Closing- / opening time only with spring	[s]			0.08	0.08	0.08	0.08
max. permitted finger length	[mm]	80	72	72	64	72	64
max. permitted weight per finger	[kg]	0.35	0.35	0.35	0.35	0.35	0.35
IP class		40	40	40	40	40	40
min. / max. ambient temperature	[°C]	5/90	5/90	5/90	5/90	5/90	5/90
Repeat accuracy	[mm]	0.01	0.01	0.01	0.01	0.01	0.01

Main view

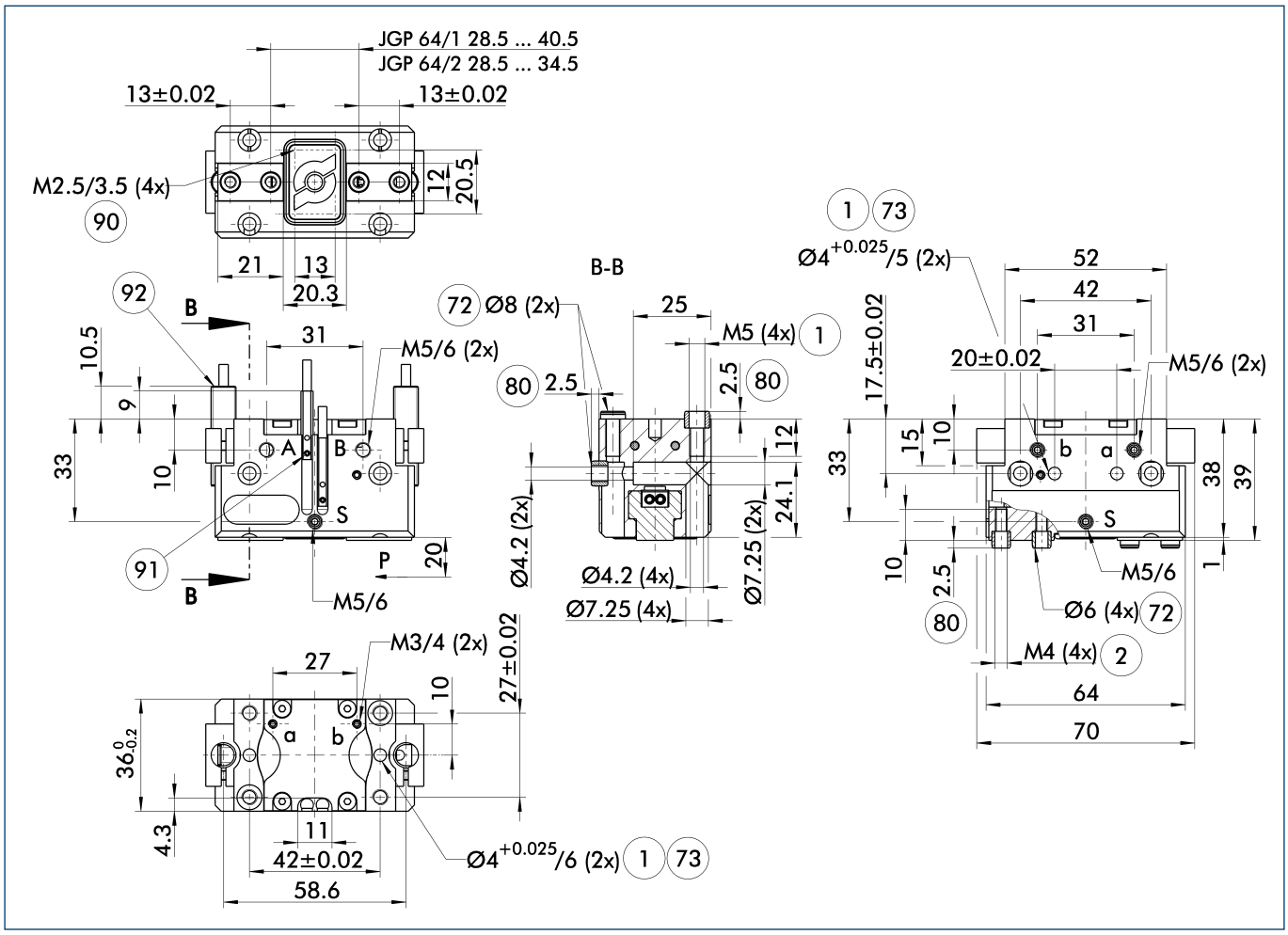

The drawing shows the gripper in the basic version with closed jaws, without dimensional consideration of the options described below.

ⓘ The SDV-P pressure maintenance valve can also be used for I.D. or O.D. gripping alternatively or in addition to the spring-loaded, mechanical gripping force maintenance device (see catalog section on "Accessories").

A, a Main / direct connection, gripper opening

B, b Main / direct connection, gripper closing

S Air purge connection (0.5 ... 1 bar)

(1) Gripper connection

(2) Finger connection

(72) Fit for centering sleeves

(73) Fit for centering pins

(80) Depth of the centering sleeve hole in the mating part

(90) Thread below the cover for fastening external attachments

(91) MMS 22... sensor

(92) IN ... sensor

Maximum permitted finger projection

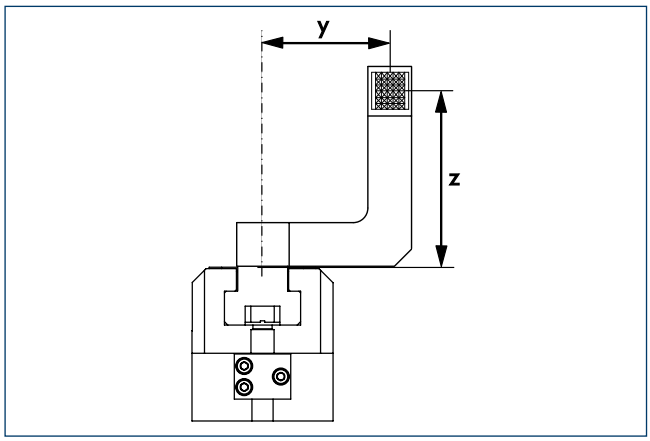

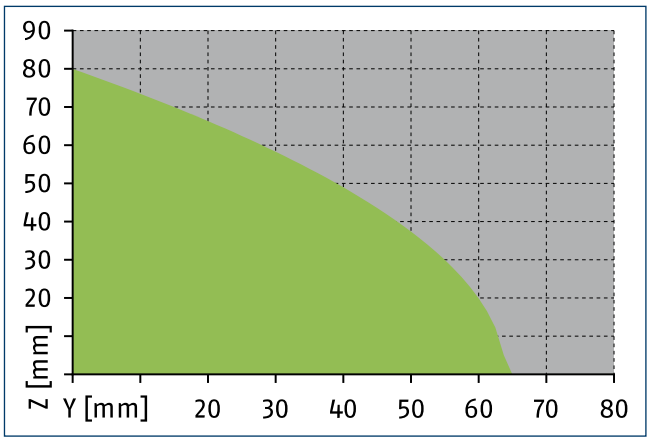

Permitted range

Inadmissible range

The curve applies for the base version (Stroke -1). For other versions, the curve must be offset in parallel corresponding to the max. permissible finger length.

Hose-free direct connection M3

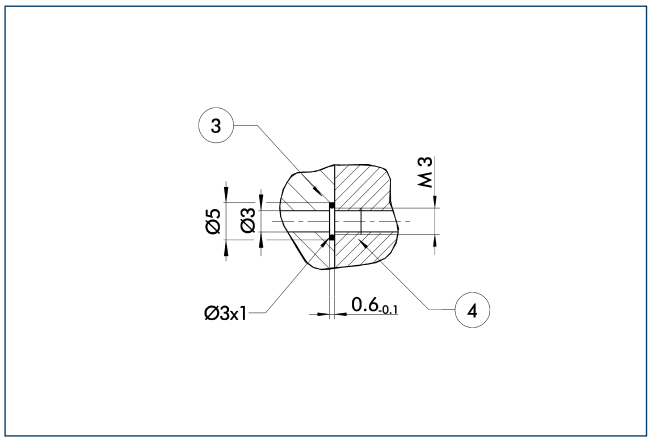

(3) Adapter (4) Gripper

The direct connection is used for supplying compressed air without hoses. Instead, the pressure medium is fed through bore-holes in the mounting plate.

Gripping force maintenance device AS / IS

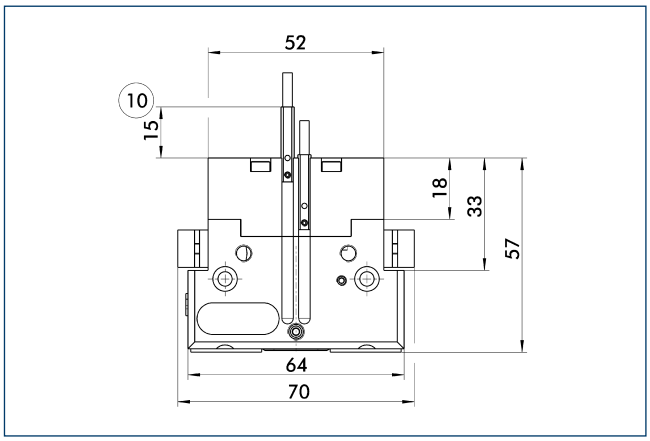

(10) Projection applies only for AS version

The mechanical maintenance of gripping force also assures a minimum gripping force in the case of a loss of pressure. With the AS / S variant, this acts as a closing force, and as an opening force for the IS variant. The maintenance of gripping force element can also be used as a means for increasing gripping force or for single actuated gripping.

SDV-P pressure maintenance valve

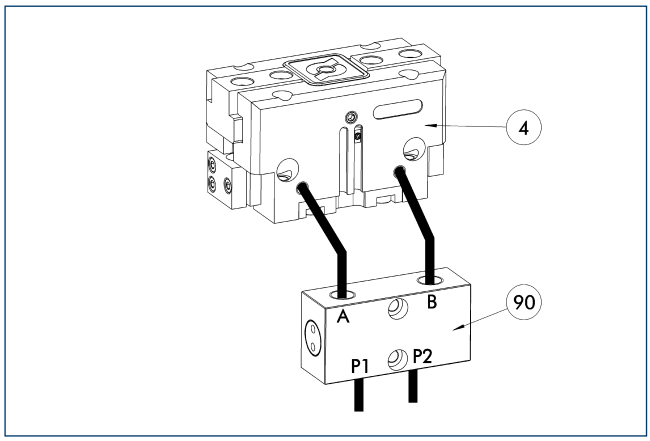

(4) Gripper
(90) SDV-P pressure maintenance valve

The SDV-P pressure maintenance valves ensure that the pressure in the piston chamber of pneumatic gripping, rotary, linear, and quick-change modules is maintained temporarily during an emergency stop.

Description	ID	
Pressure maintenance valve		
SDV-P 04	0403130	

ZBA L-plus 64 intermediate jaws

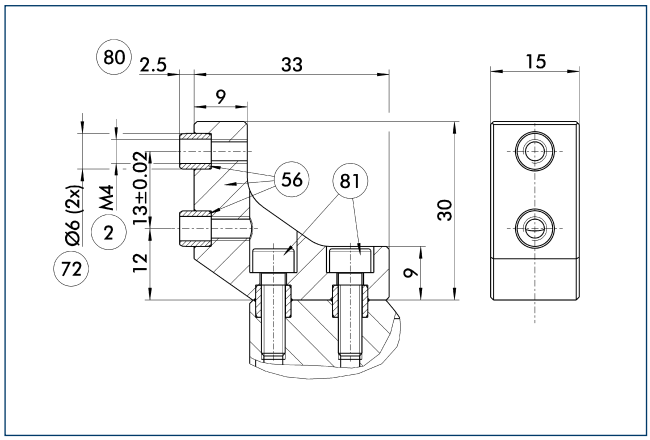

(2) Finger connection
(56) Included in delivery
(72) Fit for centering sleeves
(80) Depth of the centering sleeve hole in the mating part
(81) Not included in the scope of delivery

Optionally intermediate jaws can be used, enabling direct connection and alignment of top jaws and various standard accessories in Z-direction.

Description	ID	Material	Scope of delivery
Intermediate jaws			
ZBA-L-plus 64	0311722	Aluminum	1

BSWS jaw quick-change systems

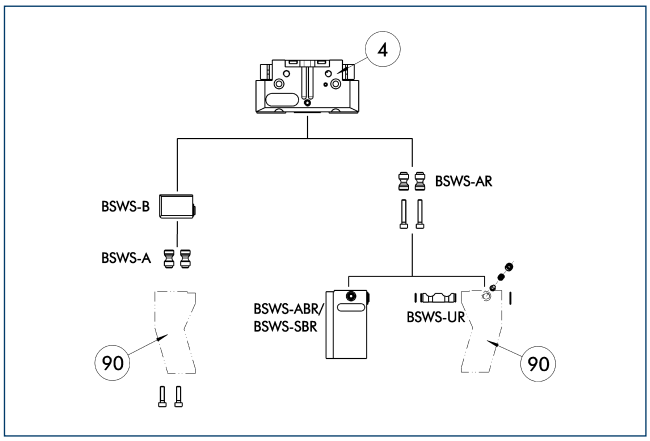

(4) Gripper
(90) Customized gripper fingers

Different jaw quick-change systems are available for this gripper. For more detailed information please see the relevant product chapters in the catalog.

Description	ID	
Jaw quick-change system adapter		
BSWS-AR 64	0300092	
BSWS-A 64	0303022	
Jaw quick-change system base		
BSWS-B 64	0303023	
Finger blanks with jaw quick-change system		
BSWS-ABR-PGZN-plus 64	0300072	
BSWS-SBR-PGZN-plus 64	0300082	
Jaw quick-change system reversed		
BSWS-UR 64	0302991	

ⓘ Only the systems listed in the table can be used.

UZB 64 universal intermediate jaw

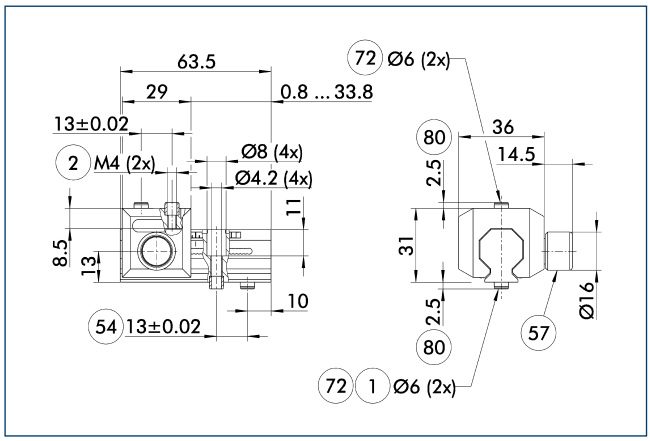

1 Gripper connection
2 Finger connection
54 Optional right or left connection
57 Locking
72 Fit for centering sleeves
80 Depth of the centering sleeve hole in the mating part

The universal intermediate jaw allows fast tool-free and reliable plugging and shifting of top jaws at the gripper.

Description	ID	Grid dimension [mm]
Universal intermediate jaw		
UZB 64	0300042	1.5
Finger blanks		
ABR-PGZN-plus 64	0300010	
SBR-PGZN-plus 64	0300020	

FMS-ZBA / ZBP 64 force-measuring jaws

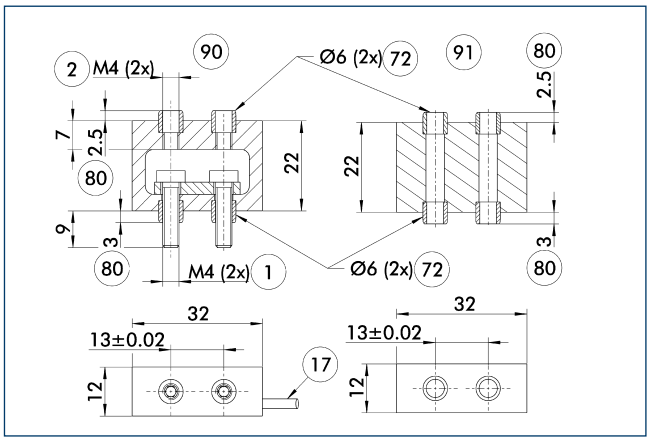

1 Gripper connection
2 Finger connection
17 Cable outlet
72 Fit for centering sleeves
80 Depth of the centering sleeve hole in the mating part
90 Active intermediate jaws
91 Passive intermediate jaws

Force measuring jaws measure gripping forces, but can also determine workpiece weights or dimensional deviations. There are active and passive intermediate jaws (FMS-ZBA or FMS-ZBP). At least one active force measuring jaw is required per gripper, the rest can be passive. For each active jaw, a FMS-A control unit and a FMS-AK connection cable are required.

Description	ID	Often combined
Active intermediate jaws		
FMS-ZBA 64	0301832	
Passive intermediate jaws		
FMS-ZBP 64	0301833	
Connection cables		
FMS-AK0200	0301820	●
FMS-AK0500	0301821	
FMS-AK1000	0301822	
FMS-AK2000	0301823	
Electronic processor		
FMS-A1	0301810	

ABR- / SBR-PGZN-plus 64 finger blanks

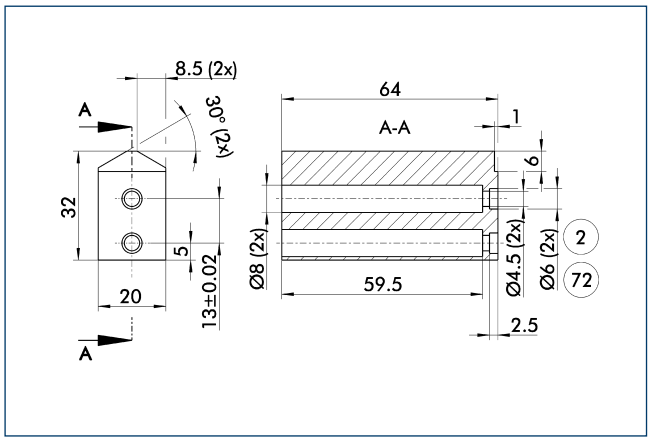

(2) Finger connection (72) Fit for centering sleeves

Finger blanks for customized subsequent machining.

Description	ID	Material	Scope of delivery
Finger blanks			
ABR-PGZN-plus 64	0300010	Aluminum	1
SBR-PGZN-plus 64	0300020	16MnCr5	1

OAS-PGN-plus 64 object distance sensor

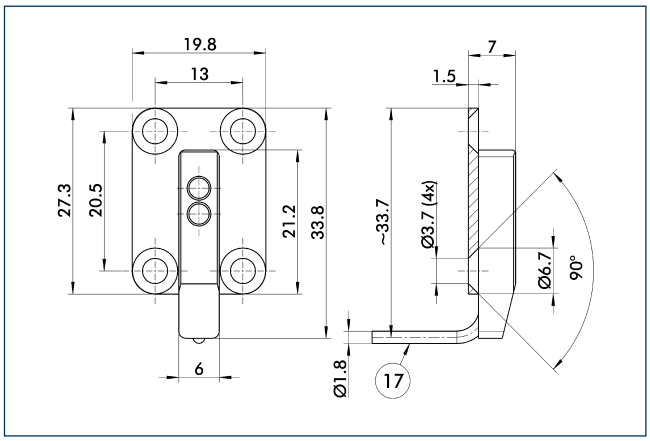

(17) Cable outlet

Description	ID	
Object distance sensor		
OAS-PGN-plus 64	0308877	

Object distance sensor

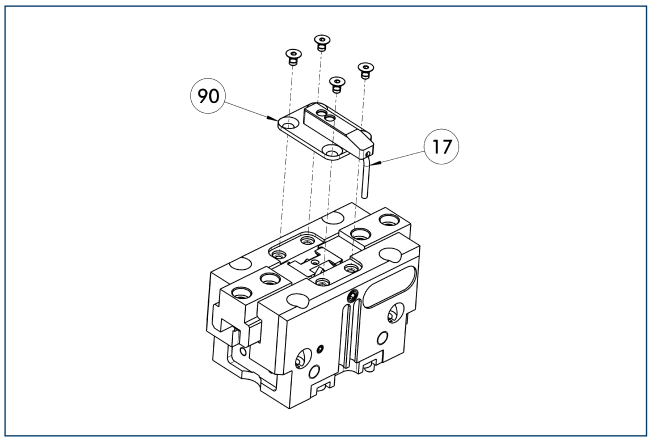

(17) Cable outlet (90) OAS

Optical distance and presence sensor for direct mounting on the gripper. One OAS sensor per gripper can be assembled.

Description	ID	
Object distance sensor		
OAS-PGN-plus 64	0308877	
Electronic processor		
OAS-V09-D	0308865	
OAS-V10-A	0308867	
OAS-V10-D	0308866	

ⓘ The evaluation of the OAS can be done with either an analog or digital evaluation unit and with or without a display. The states which should be detected can be simply taught.

Attachment valves

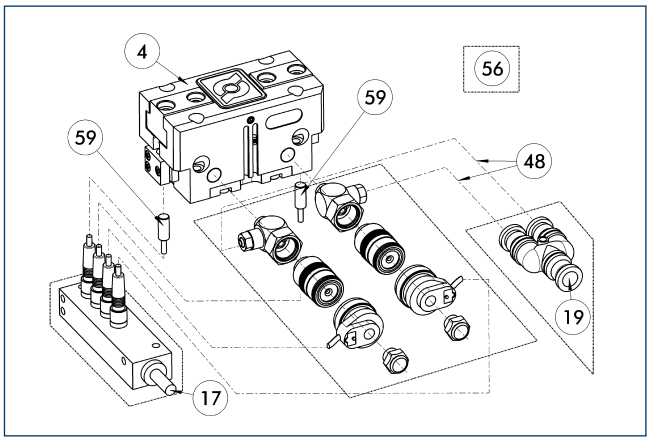

(4) Gripper (48) Hose
(17) Cable outlet (56) Included in delivery
(19) Air connection (59) Monitoring gripping

For each unit one attachment valve ABV is required, optional with distributor for sensors and valves. Attachment valves increase the efficiency, reduce the installation work and air consumption and simplify air supply. For details please refer to the "Accessories" catalog section.

Description	ID	Often combined
Attachment valves		
ABV-MV15-M5	0303323	
ABV-MV15-M5-V2-M8	0303386	
ABV-MV15-M5-V4-M8	0303356	●
ABV-MV15-M5-V8-M8	0303357	

Modular assembly automation

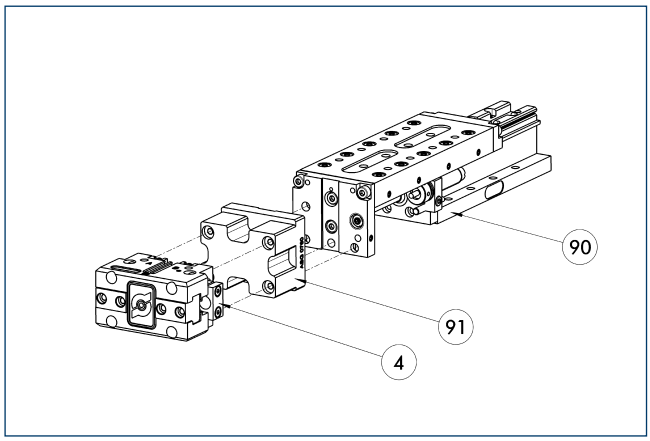

(4) Gripper
(90) CLM / KLM / LM / ELM / ELS / HLM linear module
(91) ASG adapter plate

Gripper and linear modules can be combined with standard adapters out of the modular assembly system. For more information see our catalog "Modular Assembly Automation".

VB-PGN-plus 64 valve box

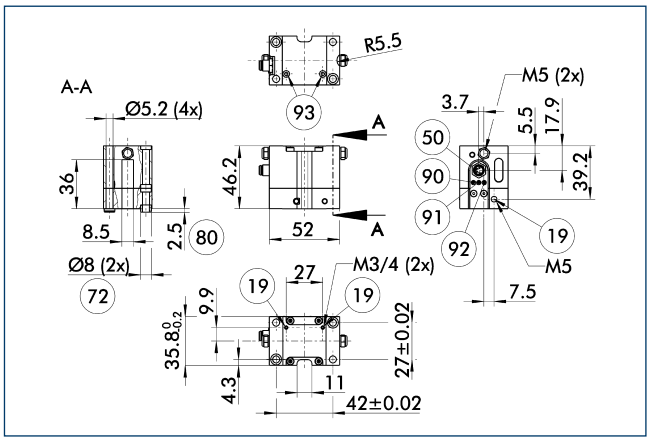

(19) Air connection
(50) Electrical connection
(72) Fit for centering sleeves
(80) Depth of the centering sleeve hole in the mating part
(90) Power supply
(91) Valve switched b for gripper opened
(92) Valve switched a for gripper opened
(93) Valve switched a and b

Description	ID	
Valve box		
VB-PGN-plus 64	0310092	

Valve box

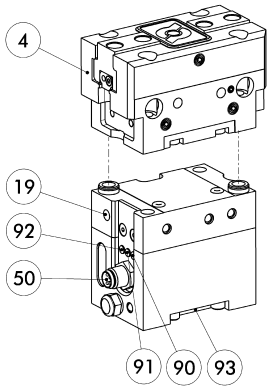

(4) Gripper
(19) Air connection
(50) Electrical connection
(90) Power supply
(91) Valve switched b for gripper opened
(92) Valve switched a for gripper opened
(93) Direct connection for hose-free compressed air supply

Ready to install, local control solution! Valves are attached directly to the handling component. As a result, cycle times are significantly reduced and the number of hoses, commissioning times, and air consumption are minimised while maximum process safety is assured.

Description	ID	Often combined
Valve box		
VB-PGN-plus 64	0310092	
Connection cables		
KA BG08-L 4P-0500	0307767	●
KA BG08-L 4P-1000	0307768	
KA BW08-L 4P-0500	0307765	
KA BW08-L 4P-1000	0307766	
KA BG08-L 3P-0300-PNP	0301622	●
KA BG08-L 3P-0500-PNP	0301623	
KA BW08-L 3P-0300-NPN	0301602	
KA BW08-L 3P-0300-PNP	0301594	
KA BW08-L 3P-0500-NPN	9641116	
KA BW08-L 3P-0500-PNP	0301502	
Sensor distributor		
V2-M8-4P-2XM8-3P	0301380	
Cable extensions		
KV BW08-SG08 3P-0030-PNP	0301495	
KV BW08-SG08 3P-0100-PNP	0301496	
KV BW08-SG08 3P-0200-PNP	0301497	●
Clip for plug / socket		
CLI-M8	0301463	

ⓘ Valve and sensor signals of the unit can be merged on a bus distributor so that the electrical as well as the pneumatic connections can be decentralized.

Inductive proximity switches

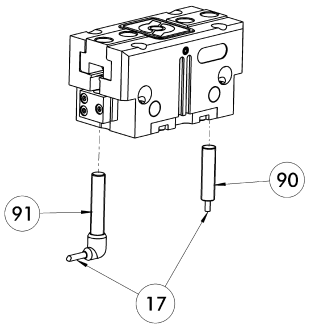

(17) Cable outlet
(90) IN ... sensor
(91) IN ...-SA sensor

Directly mounted limit position monitor.

Description	ID	Often combined
Inductive proximity switches		
IN 80-S-M12	0301578	
IN 80-S-M8	0301478	●
INK 80-S	0301550	
Inductive proximity switches with lateral outlet		
IN 80-S-M12-SA	0301587	
IN 80-S-M8-SA	0301483	●
INK 80-S-SA	0301566	
Cable extensions		
KV BG12-SG12 3P-0030-PNP	0301999	
KV BG12-SG12 3P-0060-PNP	0301998	
KV BW08-SG08 3P-0030-PNP	0301495	
KV BW08-SG08 3P-0100-PNP	0301496	
KV BW08-SG08 3P-0200-PNP	0301497	●
KV BW12-SG12 3P-0030-PNP	0301595	
KV BW12-SG12 3P-0100-PNP	0301596	
KV BW12-SG12 3P-0200-PNP	0301597	
Clip for plug / socket		
CLI-M12	0301464	
CLI-M8	0301463	
Connection cables		
KA BG08-L 3P-0300-PNP	0301622	●
KA BG08-L 3P-0500-PNP	0301623	
KA BG12-L 3P-0500-PNP	30016369	
KA BW08-L 3P-0300-PNP	0301594	
KA BW08-L 3P-0500-PNP	0301502	
KA BW12-L 3P-0300-PNP	0301503	
KA BW12-L 3P-0500-PNP	0301507	
Sensor distributor		
V2-M8	0301775	●
V2-M12	0301776	●
V4-M12	0301747	
V4-M8	0301746	

ⓘ Two sensors (closer/S) are required for each unit, plus extension cables as an option. Please note the minimum permitted bending radii for the sensor cables, which are generally 35 mm.

Flexible position sensor

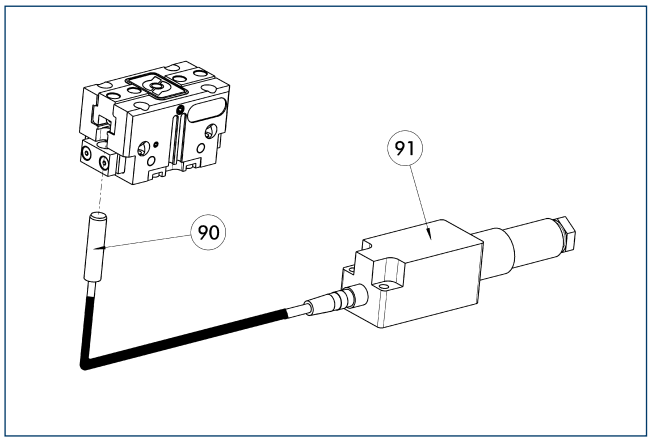

90 FPS-S sensor

91 FPS-F5 / -F5 T electronic processor

Flexible position monitoring of up to five positions.

Description	ID	Often combined
Mounting kit for FPS		
AS-FPS-PGZN-plus 64-1/80-2	0301630	
Electronic processor		
FPS-F5	0301805	●
FPS-F5 T	0301807	
Sensor		
FPS-S M8	0301704	
Clip for plug / socket		
CLI-M8	0301463	

ⓘ When using a FPS system, a FPS sensor (FPS-S) and a control unit (FPS-F5 / F5 T) are required for each gripper as well as a mounting kit (AS), if listed. Cable extensions (KV) are available as options in the "Accessories" catalog section.

MMS electronic magnetic switches

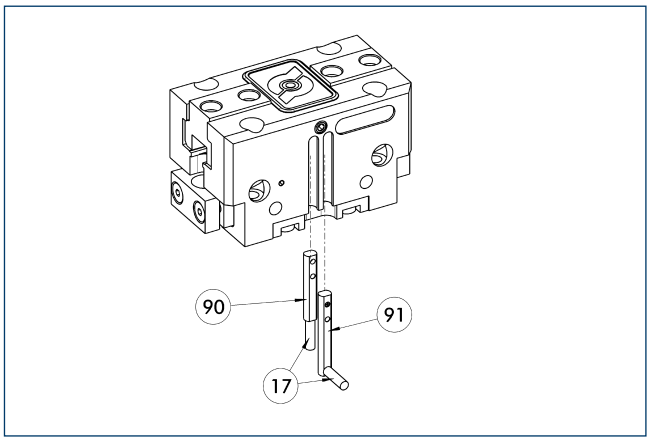

17 Cable outlet

90 MMS 22... sensor

91 MMS 22...-SA sensor

End position monitoring for mounting in the C-slot.

Description	ID	Often combined
MMS electronic magnetic switches		
MMS 22-S-M8-PNP	0301032	●
MMSK 22-S-PNP	0301034	
MMS electronic magnetic switches with lateral cable outlet		
MMS 22-S-M8-PNP-SA	0301042	●
MMSK 22-S-PNP-SA	0301044	
Cable extensions		
KV BW08-SG08 3P-0030-PNP	0301495	
KV BW08-SG08 3P-0100-PNP	0301496	
KV BW08-SG08 3P-0200-PNP	0301497	●
Clip for plug / socket		
CLI-M8	0301463	
Connection cables		
KA BG08-L 3P-0300-PNP	0301622	●
KA BG08-L 3P-0500-PNP	0301623	
KA BW08-L 3P-0300-PNP	0301594	
KA BW08-L 3P-0500-PNP	0301502	
Sensor distributor		
V2-M8	0301775	●
V4-M8	0301746	
V8-M8	0301751	

ⓘ Two sensors (closer/S) are required for each unit, plus extension cables as an option. Please note the minimum permitted bending radii for the sensor cables, which are generally 35 mm.

MMS PI1 programmable magnetic switches

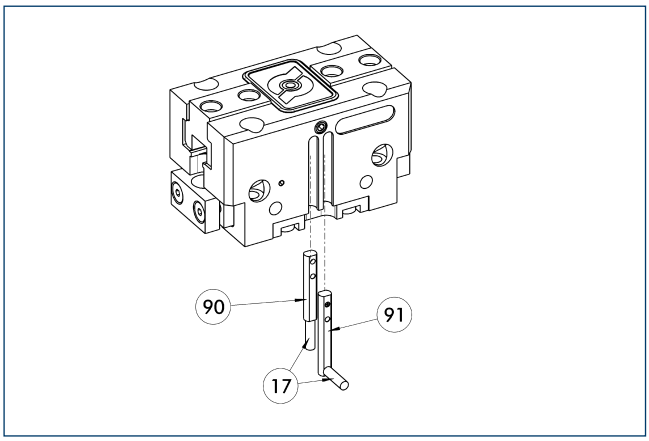

(17) Cable outlet
(91) MMS 22...-PI1-...-SA sensor
(90) MMS 22...-PI1-... sensor

Position query with one programmable position per sensor and electronics integrated in sensor. Programmable via MT magnet teaching tool (included in the scope of delivery) or ST plug teaching tool (optional). Limit position query mounted in C-groove. If the ST plug teaching tools are listed in the table, teaching can only take place with the ST plug teaching tools.

Description	ID	Often combined
MMS PI1 programmable magnetic switches		
MMS 22-PI1-S-M8-PNP	0301160	●
MMSK 22-PI1-S-PNP	0301162	
MMS PI1-HD programmable magnetic switches with stainless steel housing		
MMS 22-PI1-S-M8-PNP-HD	0301110	●
MMSK 22-PI1-S-PNP-HD	0301112	
MMS PI1 programmable magnetic switches with lateral cable outlet		
MMS 22-PI1-S-M8-PNP-SA	0301166	●
MMSK 22-PI1-S-PNP-SA	0301168	

ⓘ Two sensors (closer/S) are required for each unit, plus extension cables as an option. Please note the minimum permitted bending radii for the sensor cables, which are generally 35 mm. Connection cable, cable extensions, and sensor distributors can be found in the table for the MMS 22.

MMS PI2 programmable magnetic switches

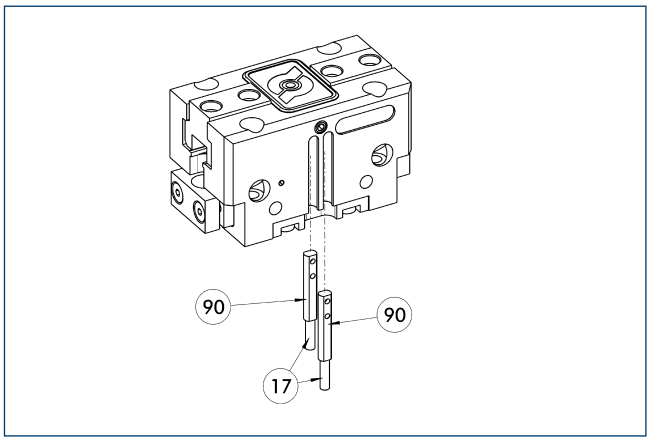

(17) Cable outlet
(90) MMS 22...-PI2-... sensor

Position query with two programmable positions per sensor and electronics integrated in sensor. Programmable via MT magnet teaching tool (included in the scope of delivery) or ST plug teaching tool (optional). Limit position query mounted in C-groove. If the ST plug teaching tools are listed in the table, teaching can only take place with the ST plug teaching tools.

Description	ID	Often combined
MMS PI2 programmable magnetic switches		
MMS 22-PI2-S-M8-PNP	0301180	●
MMSK 22-PI2-S-PNP	0301182	
MMS PI2-HD programmable magnetic switches with stainless steel housing		
MMS 22-PI2-S-M8-PNP-HD	0301130	●
MMSK 22-PI2-S-PNP-HD	0301132	

ⓘ Per unit one sensor (closer/S) is required, optionally a cable extension. Please note the minimum permitted bending radii for the sensor cables, which are generally 35 mm. Connection cable, cable extensions, and sensor distributors can be found in the table for the MMS-P 22.

MMS-P programmable magnetic switches

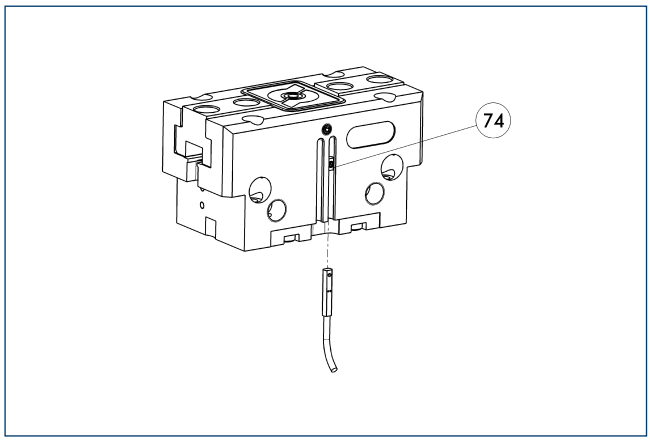

74 Stop for MMS-P

Position monitoring with two programmable positions per sensor. The end position monitoring is mounted in the C-slot.

Description	ID	Often combined
MMS-P programmable magnetic switches		
MMSK-P 22-S-PNP	0301371	
MMS-P 22-S-M8-PNP	0301370	●
Clip for plug / socket		
CLI-M8	0301463	
Connection cables		
KA BG08-L 4P-0500	0307767	●
KA BG08-L 4P-1000	0307768	
KA BW08-L 4P-0500	0307765	
KA BW08-L 4P-1000	0307766	
Sensor distributor		
V2-M8-4P-2XM8-3P	0301380	

ⓘ Per unit one sensor (closer/S) is required, optionally a cable extension. Please note the minimum permitted bending radii for the sensor cables, which are generally 35 mm.

APS-Z80 analog position sensor

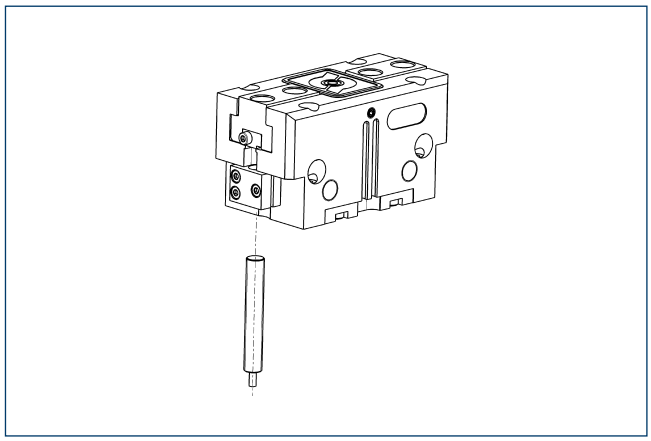

Contactlessly measuring, analog multi-position monitoring for any number of positions.

Description	ID	Often combined
Mounting kit for APS-Z80		
AS-APS-Z80-PGZN-plus 64-1	0302105	
AS-APS-Z80-PGZN-plus 64-2	0302106	
Sensor		
APS-Z80-K	0302072	
APS-Z80-M8	0302070	●

ⓘ When using an APS system, one mounting kit (AS-APS-Z80) and one APS-Z80 sensor is required per gripper.

APS-M1 analog position sensor

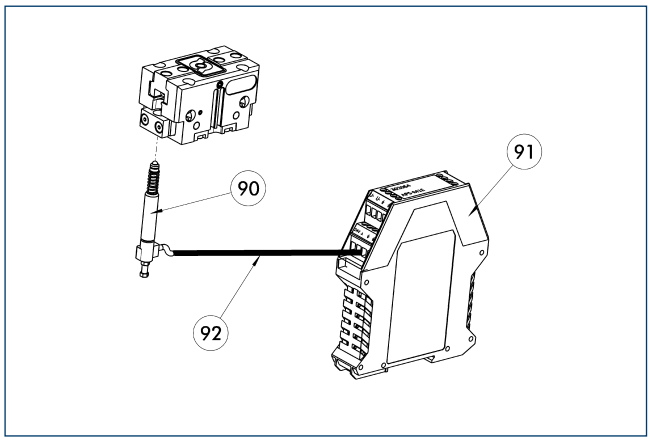

90 APS-M1S sensor
91 APS-M1E electronic processor
92 APS-K extension cable

Analog multi position monitoring for any desired positions.

Description	ID	Often combined
Mounting kit for APS-M1		
AS-APS-M1-PGZN-plus 64-1	0302075	
Connection cables		
APS-K0200	0302066	●
APS-K0700	0302068	
Electronic processor		
APS-M1E	0302064	
Sensor		
APS-M1S	0302062	

ⓘ When using an APS system, for each gripper a mounting kit (AS-APS-M1), an APS-M1S sensor (incl. 3 m cable) as well as an electronics (APS-M1e) are required. An extension cable (APS-K) can be connected between the sensor and the electronics as an option. The max. cable length between the sensor and the electronics is 10 m, between the electronics and their control unit (PLC) it is max. 1 m.

Cylindrical reed switches

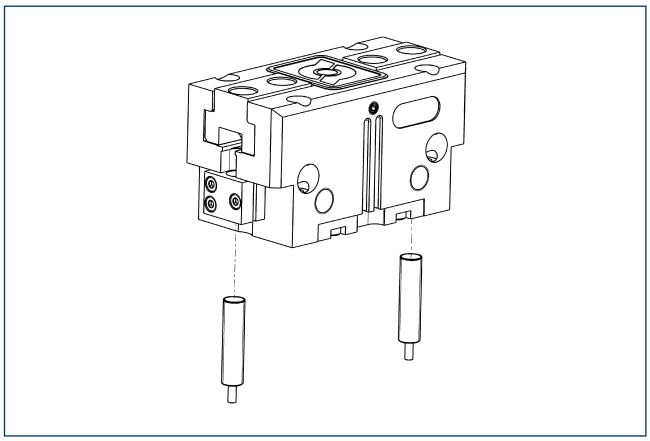

Limit position monitor can be mounted with mounting kit.

Description	ID	
Mounting kit for proximity switch		
AS-RMS 80 PGN/PZN-plus 64/80	0377725	
Reed switches		
RMS 80-S-M8	0377721	

ⓘ Two sensors (closer/S) are required for each unit, plus extension cables as an option. This mounting kit needs to be ordered optionally as an accessory. Two mounting kits are required per gripper. Please note the minimum permitted bending radii for the sensor cables, which are generally 35 mm.

JGP 80

SCHUNK Grippers pneumatic | 2-Finger Parallel Grippers | Universal Gripper

Gripping force, O.D. gripping

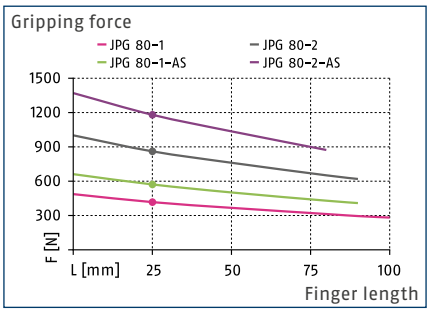

Gripping force, I.D. gripping

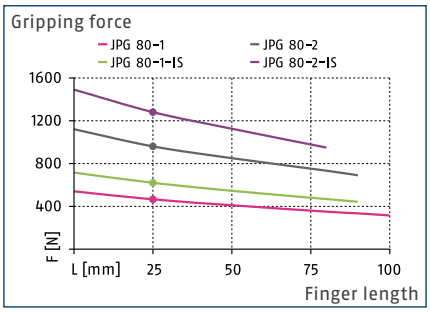

Finger load

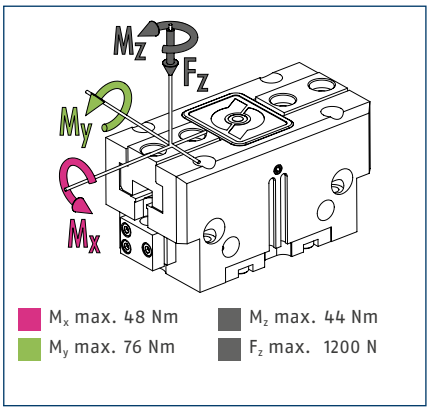

ⓘ The indicated moments and forces are static values, apply per base jaw and may occur simultaneously. M_y may arise in addition to the moment generated by the gripping force itself. If the max. permitted finger weight is exceeded, it is impreative to throttle the air supply so that the jaw movement occurs without any hitting or bouncing. Service life may be reduced.

Technical data

Description		JGP 80-1	JGP 80-2	JGP 80-1-AS	JGP 80-2-AS	JGP 80-1-IS	JGP 80-2-IS
ID		0308800	0308805	0308801	0308806	0308802	0308807
Stroke per jaw	[mm]	8	4	8	4	8	4
Closing- / opening force	[N]	415/465	860/960	570/-	1180/-	-/620	-/1280
min. spring force	[N]			155	320	155	320
Weight	[kg]	0.5	0.5	0.6	0.6	0.6	0.6
Recommended workpiece weight	[kg]	2.1	4.3	2.1	4.3	2.1	4.3
Fluid consumption per double stroke	[cm³]	22.5	22.5	36	36	42.5	42.5
min. / max. operating pressure	[bar]	2.5/8	2.5/8	4/6.5	4/6.5	4/6.5	4/6.5
Nominal operating pressure	[bar]	6	6	6	6	6	6
Closing- / opening time	[s]	0.04/0.04	0.04/0.04	0.03/0.05	0.03/0.05	0.05/0.03	0.05/0.03
Closing- / opening time only with spring	[s]			0.10	0.10	0.10	0.10
max. permitted finger length	[mm]	100	90	90	80	90	80
max. permitted weight per finger	[kg]	0.6	0.6	0.6	0.6	0.6	0.6
IP class		40	40	40	40	40	40
min. / max. ambient temperature	[°C]	5/90	5/90	5/90	5/90	5/90	5/90
Repeat accuracy	[mm]	0.01	0.01	0.01	0.01	0.01	0.01

Main view

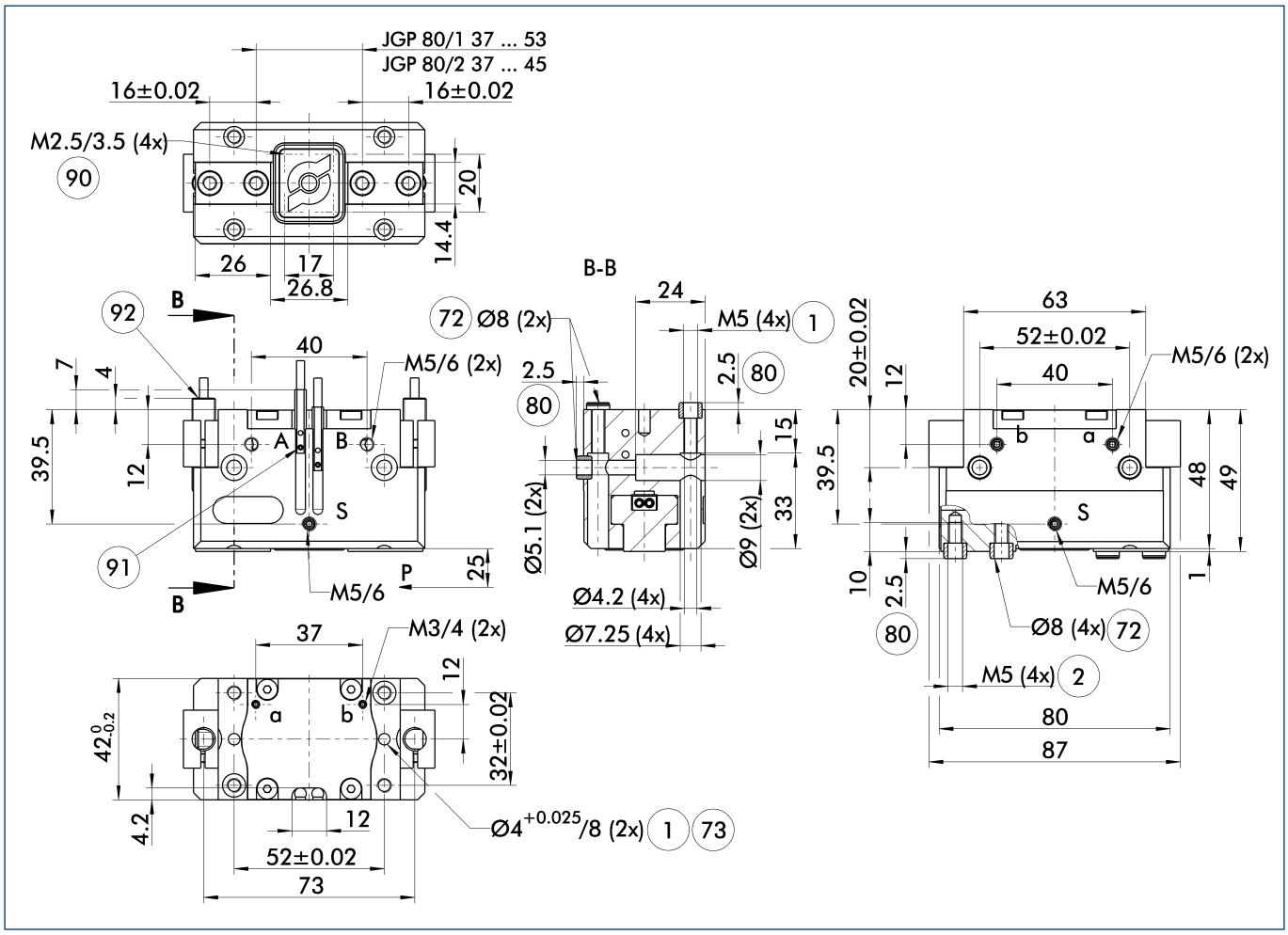

The drawing shows the gripper in the basic version with closed jaws, without dimensional consideration of the options described below.

ⓘ The SDV-P pressure maintenance valve can also be used for I.D. or O.D. gripping alternatively or in addition to the spring-loaded, mechanical gripping force maintenance device (see catalog section on "Accessories").

A, a Main / direct connection, gripper opening

B, b Main / direct connection, gripper closing

S Air purge connection (0.5 ... 1 bar)

(1) Gripper connection

(2) Finger connection

(72) Fit for centering sleeves

(73) Fit for centering pins

(80) Depth of the centering sleeve hole in the mating part

(90) Thread below the cover for fastening external attachments

(91) MMS 22... sensor

(92) IN ... sensor

Maximum permitted finger projection

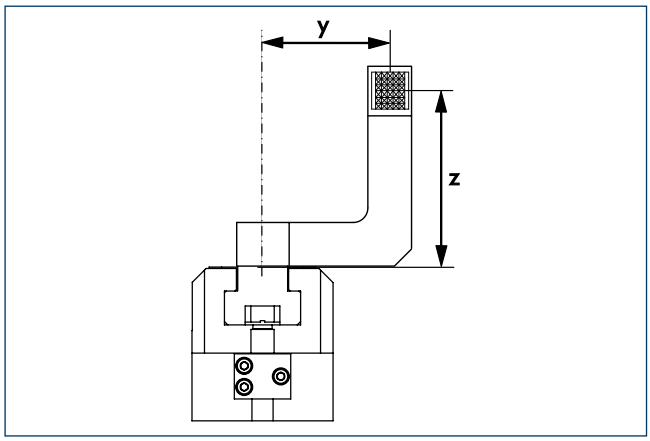

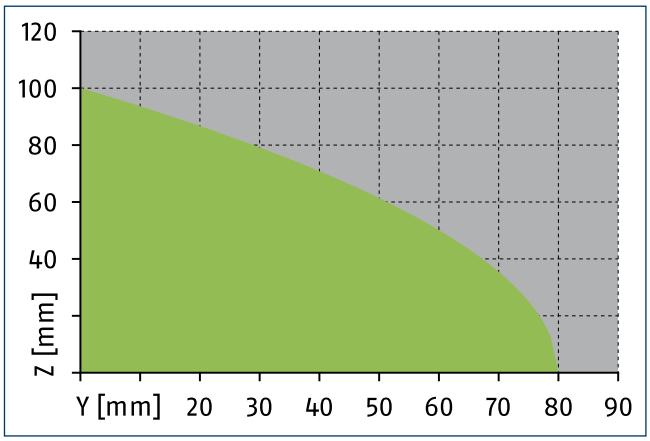

Permitted range Inadmissible range

The curve applies for the base version (Stroke -1). For other versions, the curve must be offset in parallel corresponding to the max. permissible finger length.

Hose-free direct connection M3

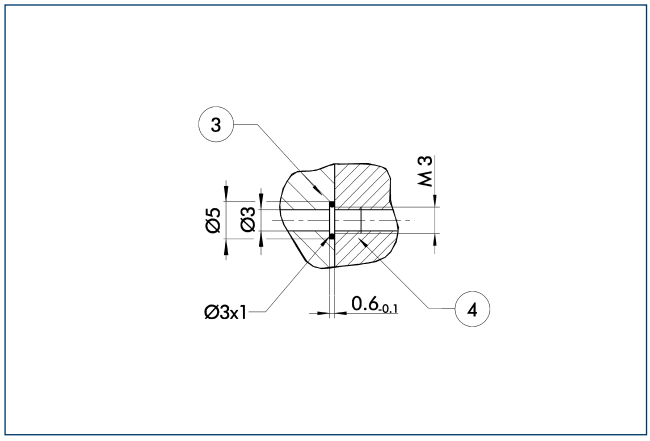

(3) Adapter (4) Gripper

The direct connection is used for supplying compressed air without hoses. Instead, the pressure medium is fed through bore-holes in the mounting plate.

Gripping force maintenance device AS / IS

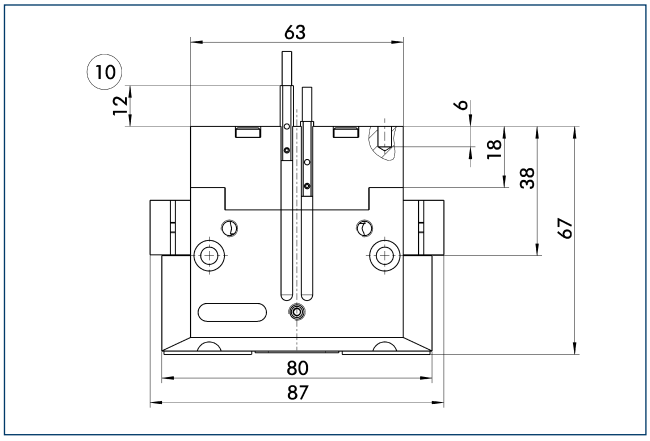

(10) Projection applies only for AS version

The mechanical maintenance of gripping force also assures a minimum gripping force in the case of a loss of pressure. With the AS / S variant, this acts as a closing force, and as an opening force for the IS variant. The maintenance of gripping force element can also be used as a means for increasing gripping force or for single actuated gripping.

SDV-P pressure maintenance valve

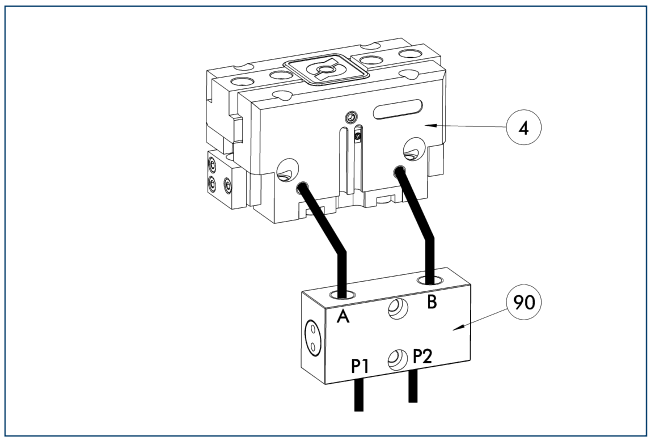

(4) Gripper
(90) SDV-P pressure maintenance valve

The SDV-P pressure maintenance valves ensure that the pressure in the piston chamber of pneumatic gripping, rotary, linear, and quick-change modules is maintained temporarily during an emergency stop.

Description	ID	
Pressure maintenance valve		
SDV-P 04	0403130	

ZBA L-plus 80 intermediate jaws

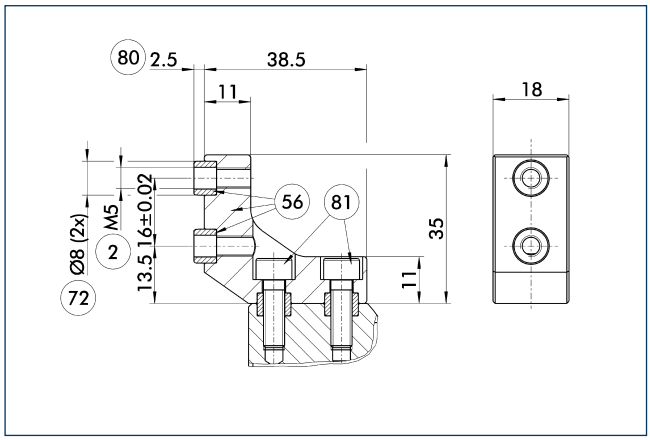

(2) Finger connection
(56) Included in delivery
(72) Fit for centering sleeves
(80) Depth of the centering sleeve hole in the mating part
(81) Not included in the scope of delivery

Optionally intermediate jaws can be used, enabling direct connection and alignment of top jaws and various standard accessories in Z-direction.

Description	ID	Material	Scope of delivery
Intermediate jaws			
ZBA-L-plus 80	0311732	Aluminum	1

BSWS jaw quick-change systems

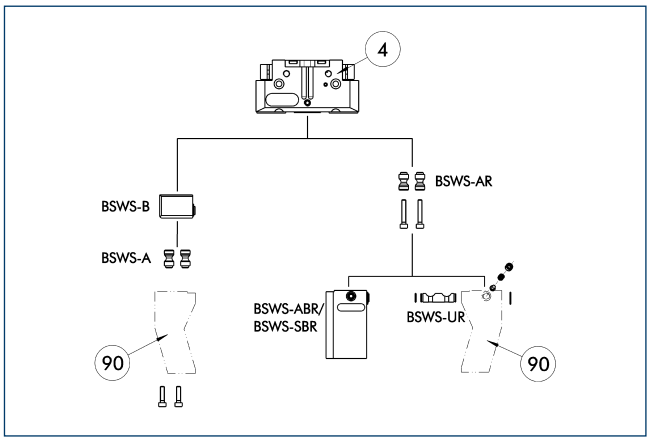

(4) Gripper
(90) Customized gripper fingers

Different jaw quick-change systems are available for this gripper. For more detailed information please see the relevant product chapters in the catalog.

Description	ID	
Jaw quick-change system adapter		
BSWS-AR 80	0300093	
BSWS-A 80	0303024	
Jaw quick-change system base		
BSWS-B 80	0303025	
Finger blanks with jaw quick-change system		
BSWS-ABR-PGZN-plus 80	0300073	
BSWS-SBR-PGZN-plus 80	0300083	
Jaw quick-change system reversed		
BSWS-UR 80	0302992	

ⓘ Only the systems listed in the table can be used.

UZB 80 universal intermediate jaw

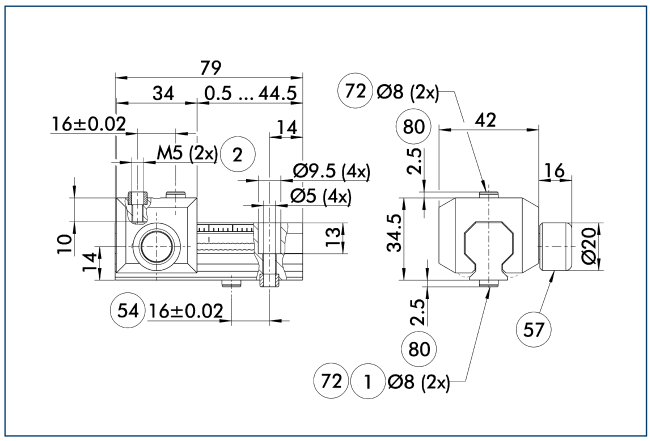

1 Gripper connection
2 Finger connection
54 Optional right or left connection
57 Locking
72 Fit for centering sleeves
80 Depth of the centering sleeve hole in the mating part

The universal intermediate jaw allows fast tool-free and reliable plugging and shifting of top jaws at the gripper.

Description	ID	Grid dimension [mm]
Universal intermediate jaw		
UZB 80	0300043	2
UZB-S 80	5518271	2
Finger blanks		
ABR-PGZN-plus 80	0300011	
SBR-PGZN-plus 80	0300021	

FMS-ZBA / ZBP 80 force-measuring jaws

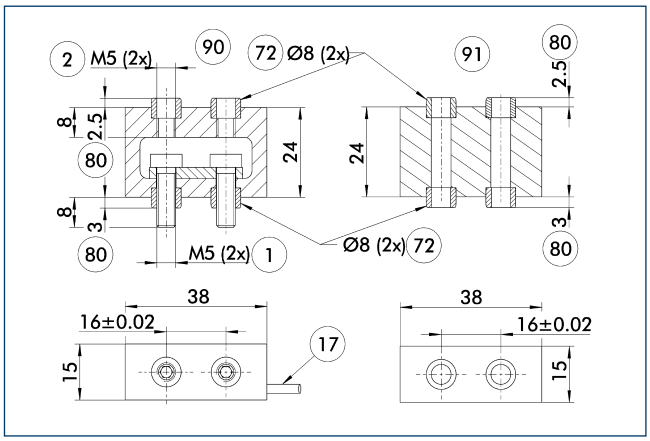

1 Gripper connection
2 Finger connection
17 Cable outlet
72 Fit for centering sleeves
80 Depth of the centering sleeve hole in the mating part
90 Active intermediate jaws
91 Passive intermediate jaws

Force measuring jaws measure gripping forces, but can also determine workpiece weights or dimensional deviations. There are active and passive intermediate jaws (FMS-ZBA or FMS-ZBP). At least one active force measuring jaw is required per gripper, the rest can be passive. For each active jaw, a FMS-A control unit and a FMS-AK connection cable are required.

Description	ID	Often combined
Active intermediate jaws		
FMS-ZBA 80	0301834	
Passive intermediate jaws		
FMS-ZBP 80	0301835	
Connection cables		
FMS-AK0200	0301820	●
FMS-AK0500	0301821	
FMS-AK1000	0301822	
FMS-AK2000	0301823	
Electronic processor		
FMS-A1	0301810	

ABR- / SBR-PGZN-plus 80 finger blanks

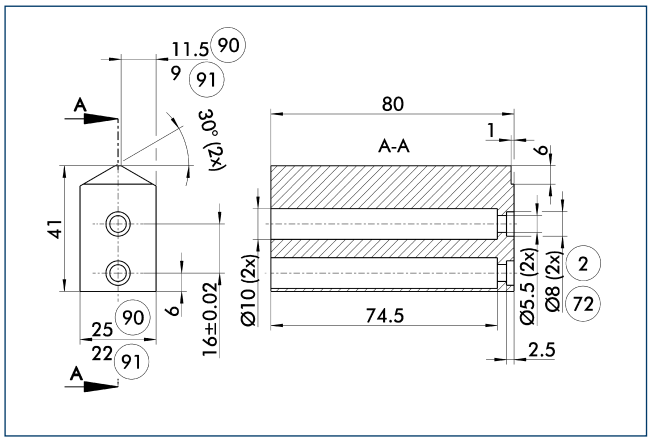

(2) Finger connection
(72) Fit for centering sleeves
(90) ABR-PGZN-plus
(91) SBR-PGZN-plus

Finger blanks for customized subsequent machining.

Description	ID	Material	Scope of delivery
Finger blanks			
ABR-PGZN-plus 80	0300011	Aluminum	1
SBR-PGZN-plus 80	0300021	16MnCr5	1

OAS-PGN-plus 80 object distance sensor

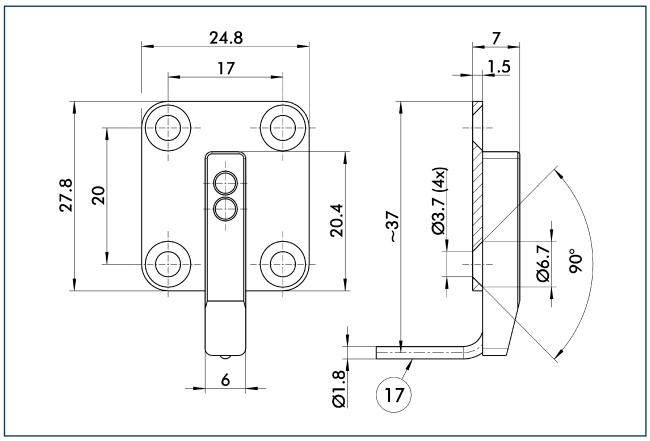

(17) Cable outlet

Description	ID	
Object distance sensor		
OAS-PGN-plus 80	0308878	

Object distance sensor

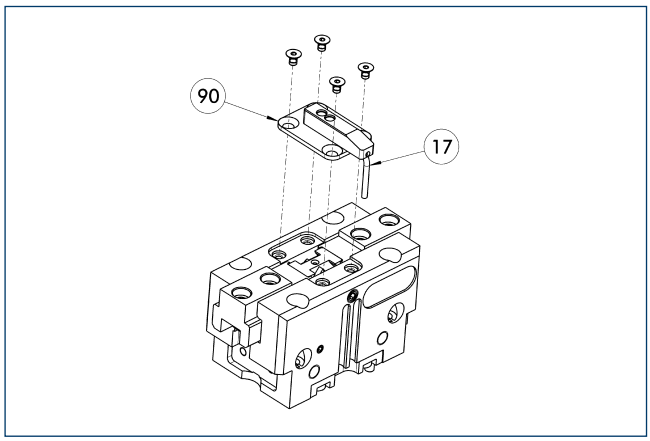

(17) Cable outlet
(90) OAS

Optical distance and presence sensor for direct mounting on the gripper. One OAS sensor per gripper can be assembled.

Description	ID	
Object distance sensor		
OAS-PGN-plus 80	0308878	
Electronic processor		
OAS-V09-D	0308865	
OAS-V10-A	0308867	
OAS-V10-D	0308866	

ⓘ The evaluation of the OAS can be done with either an analog or digital evaluation unit and with or without a display. The states which should be detected can be simply taught.

Attachment valves

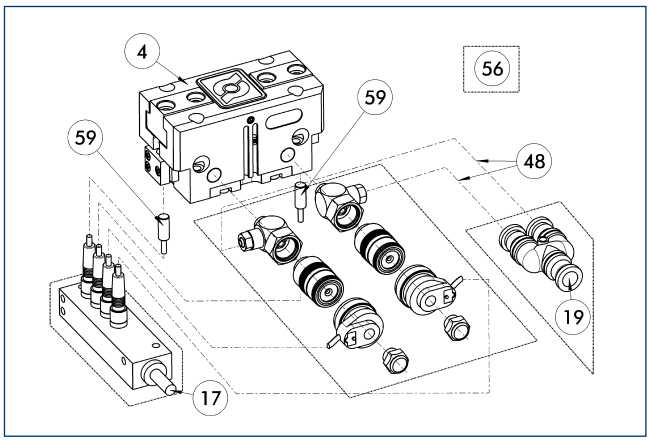

(4) Gripper
(17) Cable outlet
(19) Air connection
(48) Hose
(56) Included in delivery
(59) Monitoring gripping

For each unit one attachment valve ABV is required, optional with distributor for sensors and valves. Attachment valves increase the efficiency, reduce the installation work and air consumption and simplify air supply. For details please refer to the "Accessories" catalog section.

Description	ID	Often combined
Attachment valves		
ABV-MV25-M5	0303326	
ABV-MV25-M5-V2-M8	0303392	
ABV-MV25-M5-V4-M8	0303362	●
ABV-MV25-M5-V8-M8	0303363	

Modular assembly automation

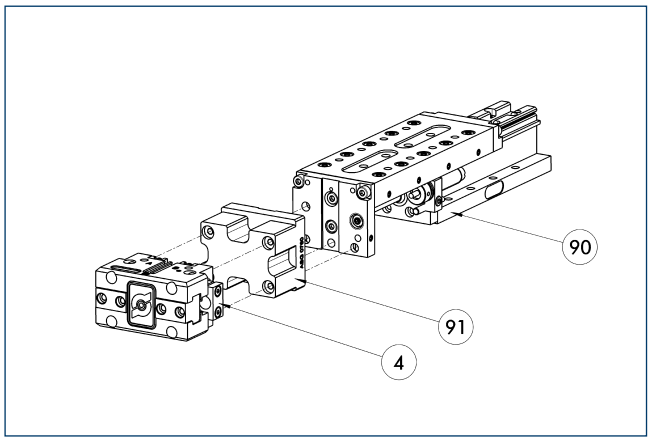

(4) Gripper
(91) ASG adapter plate
(90) CLM / KLM / LM / ELM / ELS / HLM linear module

Gripper and linear modules can be combined with standard adapters out of the modular assembly system. For more information see our catalog "Modular Assembly Automation".

Inductive proximity switches

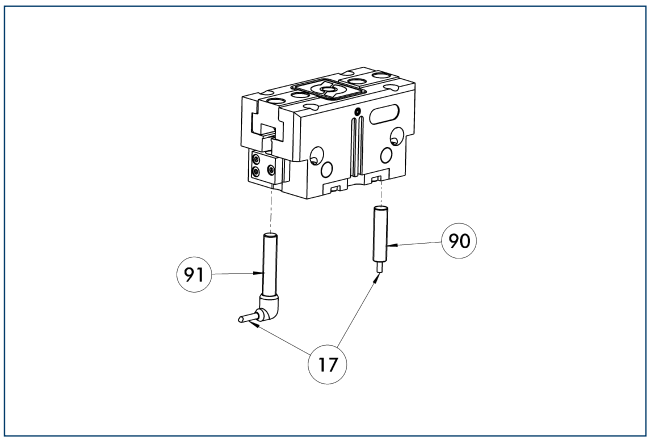

(17) Cable outlet
(91) IN ...-SA sensor
(90) IN ... sensor

Directly mounted limit position monitor.

Description	ID	Often combined
Inductive proximity switches		
IN 80-S-M12	0301578	
IN 80-S-M8	0301478	●
INK 80-S	0301550	
Inductive proximity switches with lateral outlet		
IN 80-S-M12-SA	0301587	
IN 80-S-M8-SA	0301483	●
INK 80-S-SA	0301566	
Cable extensions		
KV BG12-SG12 3P-0030-PNP	0301999	
KV BG12-SG12 3P-0060-PNP	0301998	
KV BW08-SG08 3P-0030-PNP	0301495	
KV BW08-SG08 3P-0100-PNP	0301496	
KV BW08-SG08 3P-0200-PNP	0301497	●
KV BW12-SG12 3P-0030-PNP	0301595	
KV BW12-SG12 3P-0100-PNP	0301596	
KV BW12-SG12 3P-0200-PNP	0301597	
Clip for plug / socket		
CLI-M12	0301464	
CLI-M8	0301463	
Connection cables		
KA BG08-L 3P-0300-PNP	0301622	●
KA BG08-L 3P-0500-PNP	0301623	
KA BG12-L 3P-0500-PNP	30016369	
KA BW08-L 3P-0300-PNP	0301594	
KA BW08-L 3P-0500-PNP	0301502	
KA BW12-L 3P-0300-PNP	0301503	
KA BW12-L 3P-0500-PNP	0301507	
Sensor distributor		
V2-M8	0301775	●
V2-M12	0301776	●
V4-M12	0301747	
V4-M8	0301746	

ⓘ Two sensors (closer/S) are required for each unit, plus extension cables as an option. Please note the minimum permitted bending radii for the sensor cables, which are generally 35 mm.

Flexible position sensor

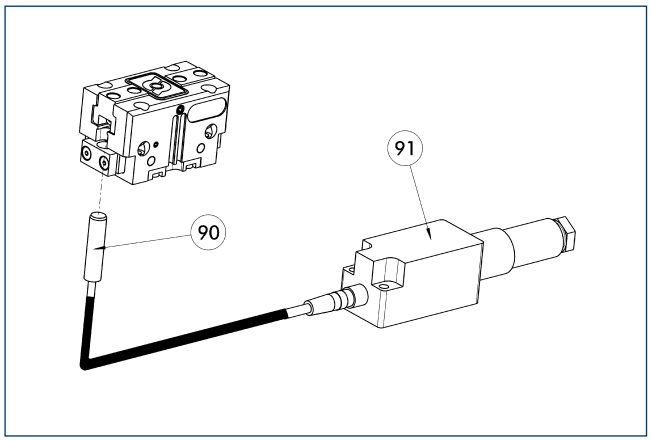

90 FPS-S sensor
91 FPS-F5 / -F5 T electronic processor

Flexible position monitoring of up to five positions.

Description	ID	Often combined
Mounting kit for FPS		
AS-FPS-PGZN-plus 80-1/PZB 80/PZB 100	0301632	
Electronic processor		
FPS-F5	0301805	●
FPS-F5 T	0301807	
Sensor		
FPS-S M8	0301704	
Clip for plug / socket		
CLI-M8	0301463	

ⓘ When using a FPS system, a FPS sensor (FPS-S) and a control unit (FPS-F5 / F5 T) are required for each gripper as well as a mounting kit (AS), if listed. Cable extensions (KV) are available as options in the "Accessories" catalog section.

MMS electronic magnetic switches

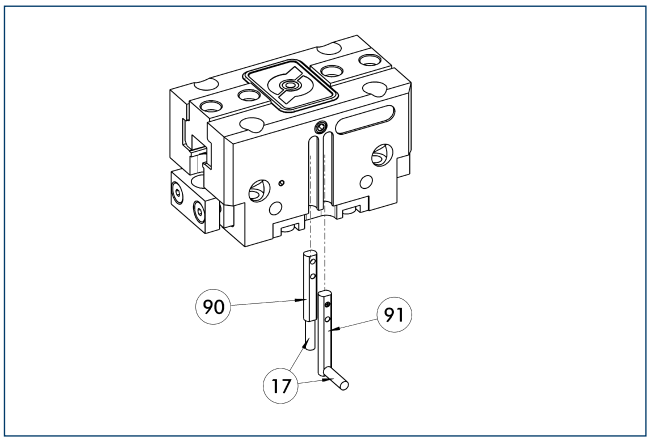

17 Cable outlet
90 MMS 22... sensor
91 MMS 22...-SA sensor

End position monitoring for mounting in the C-slot.

Description	ID	Often combined
MMS electronic magnetic switches		
MMS 22-S-M8-PNP	0301032	●
MMSK 22-S-PNP	0301034	
MMS electronic magnetic switches with lateral cable outlet		
MMS 22-S-M8-PNP-SA	0301042	●
MMSK 22-S-PNP-SA	0301044	
Cable extensions		
KV BW08-SG08 3P-0030-PNP	0301495	
KV BW08-SG08 3P-0100-PNP	0301496	
KV BW08-SG08 3P-0200-PNP	0301497	●
Clip for plug / socket		
CLI-M8	0301463	
Connection cables		
KA BG08-L 3P-0300-PNP	0301622	●
KA BG08-L 3P-0500-PNP	0301623	
KA BW08-L 3P-0300-PNP	0301594	
KA BW08-L 3P-0500-PNP	0301502	
Sensor distributor		
V2-M8	0301775	●
V4-M8	0301746	
V8-M8	0301751	

ⓘ Two sensors (closer/S) are required for each unit, plus extension cables as an option. Please note the minimum permitted bending radii for the sensor cables, which are generally 35 mm.

MMS PI1 programmable magnetic switches

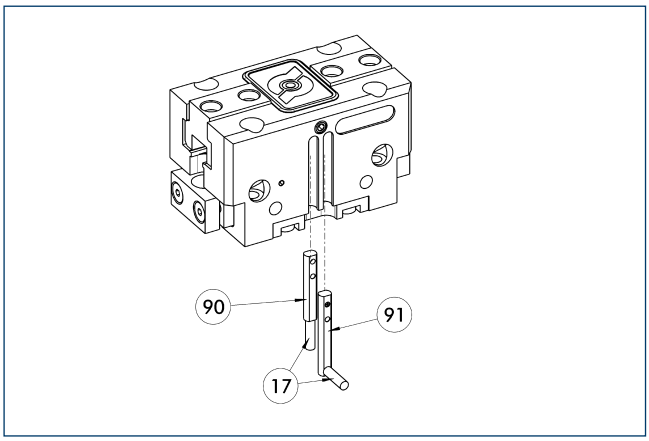

(17) Cable outlet
(91) MMS 22...-PI1-...-SA sensor
(90) MMS 22...-PI1-... sensor

Position query with one programmable position per sensor and electronics integrated in sensor. Programmable via MT magnet teaching tool (included in the scope of delivery) or ST plug teaching tool (optional). Limit position query mounted in C-groove. If the ST plug teaching tools are listed in the table, teaching can only take place with the ST plug teaching tools.

Description	ID	Often combined
MMS PI1 programmable magnetic switches		
MMS 22-PI1-S-M8-PNP	0301160	●
MMSK 22-PI1-S-PNP	0301162	
MMS PI1-HD programmable magnetic switches with stainless steel housing		
MMS 22-PI1-S-M8-PNP-HD	0301110	●
MMSK 22-PI1-S-PNP-HD	0301112	
MMS PI1 programmable magnetic switches with lateral cable outlet		
MMS 22-PI1-S-M8-PNP-SA	0301166	●
MMSK 22-PI1-S-PNP-SA	0301168	

ⓘ Two sensors (closer/S) are required for each unit, plus extension cables as an option. Please note the minimum permitted bending radii for the sensor cables, which are generally 35 mm. Connection cable, cable extensions, and sensor distributors can be found in the table for the MMS 22.

MMS PI2 programmable magnetic switches

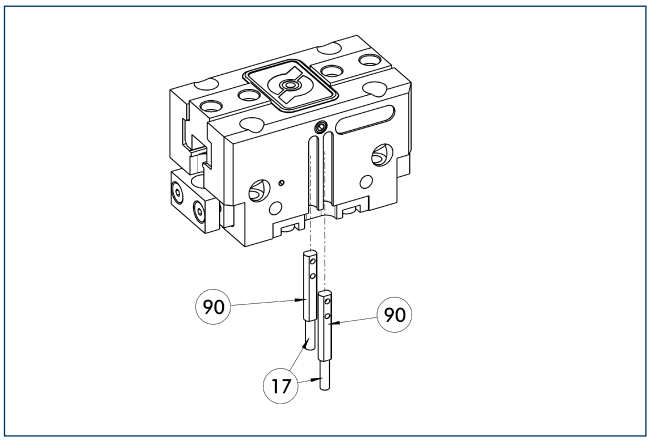

(17) Cable outlet
(90) MMS 22...-PI2-... sensor

Position query with two programmable positions per sensor and electronics integrated in sensor. Programmable via MT magnet teaching tool (included in the scope of delivery) or ST plug teaching tool (optional). Limit position query mounted in C-groove. If the ST plug teaching tools are listed in the table, teaching can only take place with the ST plug teaching tools.

Description	ID	Often combined
MMS PI2 programmable magnetic switches		
MMS 22-PI2-S-M8-PNP	0301180	●
MMSK 22-PI2-S-PNP	0301182	
MMS PI2-HD programmable magnetic switches with stainless steel housing		
MMS 22-PI2-S-M8-PNP-HD	0301130	●
MMSK 22-PI2-S-PNP-HD	0301132	

ⓘ Per unit one sensor (closer/S) is required, optionally a cable extension. Please note the minimum permitted bending radii for the sensor cables, which are generally 35 mm. Connection cable, cable extensions, and sensor distributors can be found in the table for the MMS-P 22.

MMS-P programmable magnetic switches

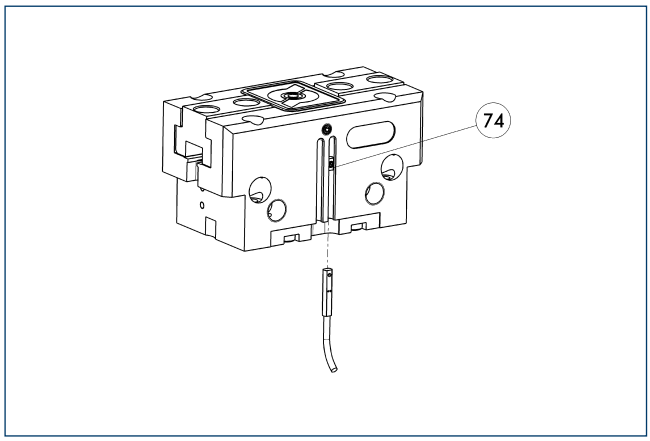

74 Stop for MMS-P

Position monitoring with two programmable positions per sensor. The end position monitoring is mounted in the C-slot.

Description	ID	Often combined
MMS-P programmable magnetic switches		
MMSK-P 22-S-PNP	0301371	
MMS-P 22-S-M8-PNP	0301370	●
Clip for plug / socket		
CLI-M8	0301463	
Connection cables		
KA BG08-L 4P-0500	0307767	●
KA BG08-L 4P-1000	0307768	
KA BW08-L 4P-0500	0307765	
KA BW08-L 4P-1000	0307766	
Sensor distributor		
V2-M8-4P-2XM8-3P	0301380	

ⓘ Per unit one sensor (closer/S) is required, optionally a cable extension. Please note the minimum permitted bending radii for the sensor cables, which are generally 35 mm.

APS-Z80 analog position sensor

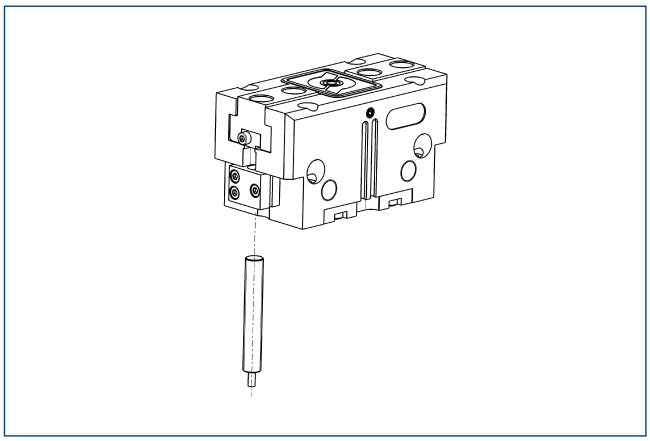

Contactlessly measuring, analog multi-position monitoring for any number of positions.

Description	ID	Often combined
Mounting kit for APS-Z80		
AS-APS-Z80-PGZN-plus 80-1	0302107	
AS-APS-Z80-PGZN-plus 80-2	0302108	
Sensor		
APS-Z80-K	0302072	
APS-Z80-M8	0302070	●

ⓘ When using an APS system, one mounting kit (AS-APS-Z80) and one APS-Z80 sensor is required per gripper.

APS-M1 analog position sensor

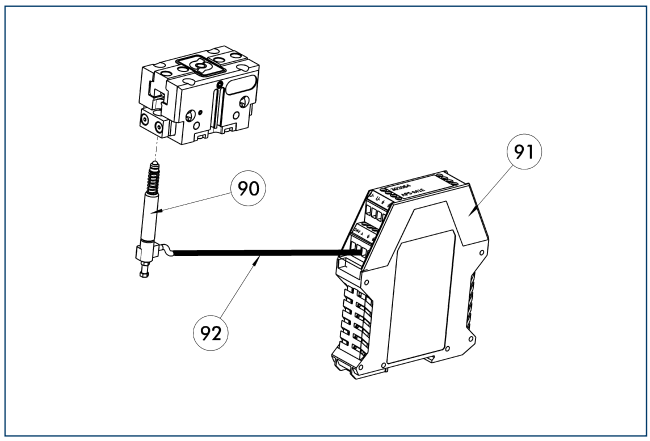

(90) APS-M1S sensor
(91) APS-M1E electronic processor
(92) APS-K extension cable

Analog multi position monitoring for any desired positions.

Description	ID	Often combined
Mounting kit for APS-M1		
AS-APS-M1-PGZN-plus 80-1	0302077	
Connection cables		
APS-K0200	0302066	●
APS-K0700	0302068	
Electronic processor		
APS-M1E	0302064	
Sensor		
APS-M1S	0302062	

ⓘ When using an APS system, for each gripper a mounting kit (AS-APS-M1), an APS-M1S sensor (incl. 3 m cable) as well as an electronics (APS-M1e) are required. An extension cable (APS-K) can be connected between the sensor and the electronics as an option. The max. cable length between the sensor and the electronics is 10 m, between the electronics and their control unit (PLC) it is max. 1 m.

Cylindrical reed switches

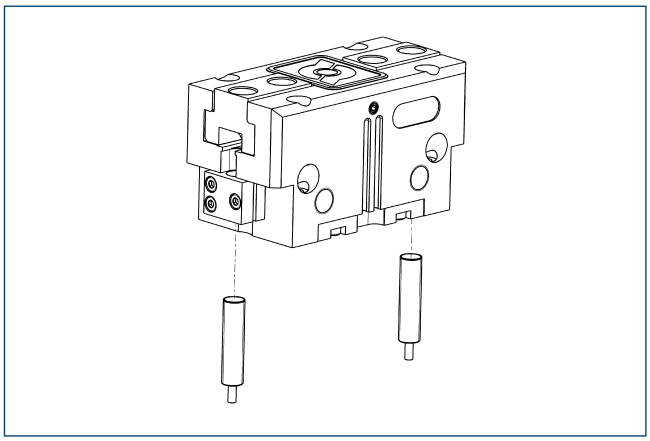

Limit position monitor can be mounted with mounting kit.

Description	ID	
Mounting kit for proximity switch		
AS-RMS 80 PGN/PZN-plus 64/80	0377725	
Reed switches		
RMS 80-S-M8	0377721	

ⓘ Two sensors (closer/S) are required for each unit, plus extension cables as an option. This mounting kit needs to be ordered optionally as an accessory. Two mounting kits are required per gripper. Please note the minimum permitted bending radii for the sensor cables, which are generally 35 mm.

JGP 100

SCHUNK Grippers pneumatic | 2-Finger Parallel Grippers | Universal Gripper

Gripping force, O.D. gripping

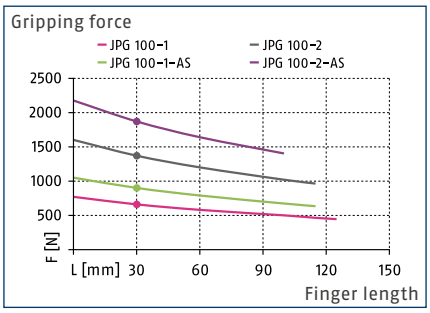

Gripping force, I.D. gripping

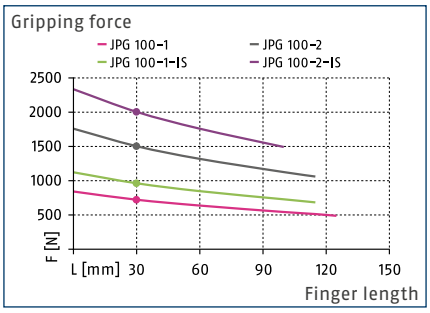

Finger load

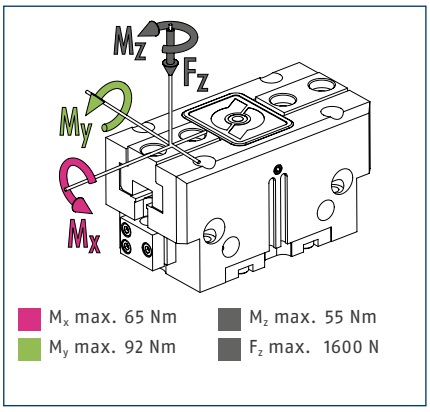

ⓘ The indicated moments and forces are static values, apply per base jaw and may occur simultaneously. M_y may arise in addition to the moment generated by the gripping force itself. If the max. permitted finger weight is exceeded, it is impreative to throttle the air supply so that the jaw movement occurs without any hitting or bouncing. Service life may be reduced.

Technical data

Description		JGP 100-1	JGP 100-2	JGP 100-1-AS	JGP 100-2-AS	JGP 100-1-IS	JGP 100-2-IS
ID		0308640	0308645	0308641	0308646	0308642	0308647
Stroke per jaw	[mm]	10	5	10	5	10	5
Closing- / opening force	[N]	660/725	1370/1500	900/-	1870/-	-/965	-/2000
min. spring force	[N]			240	500	240	500
Weight	[kg]	0.81	0.81	1	1	1	1
Recommended workpiece weight	[kg]	3.3	6.85	3.3	6.85	3.3	6.85
Fluid consumption per double stroke	[cm³]	45	45	79	79	90	90
min. / max. operating pressure	[bar]	2.5/8	2.5/8	4/6.5	4/6.5	4/6.5	4/6.5
Nominal operating pressure	[bar]	6	6	6	6	6	6
Closing- / opening time	[s]	0.07/0.07	0.07/0.07	0.05/0.09	0.05/0.09	0.09/0.05	0.09/0.05
Closing- / opening time only with spring	[s]			0.20	0.20	0.20	0.20
max. permitted finger length	[mm]	125	115	115	100	115	100
max. permitted weight per finger	[kg]	1.1	1.1	1.1	1.1	1.1	1.1
IP class		40	40	40	40	40	40
min. / max. ambient temperature	[°C]	5/90	5/90	5/90	5/90	5/90	5/90
Repeat accuracy	[mm]	0.01	0.01	0.01	0.01	0.01	0.01

Main view

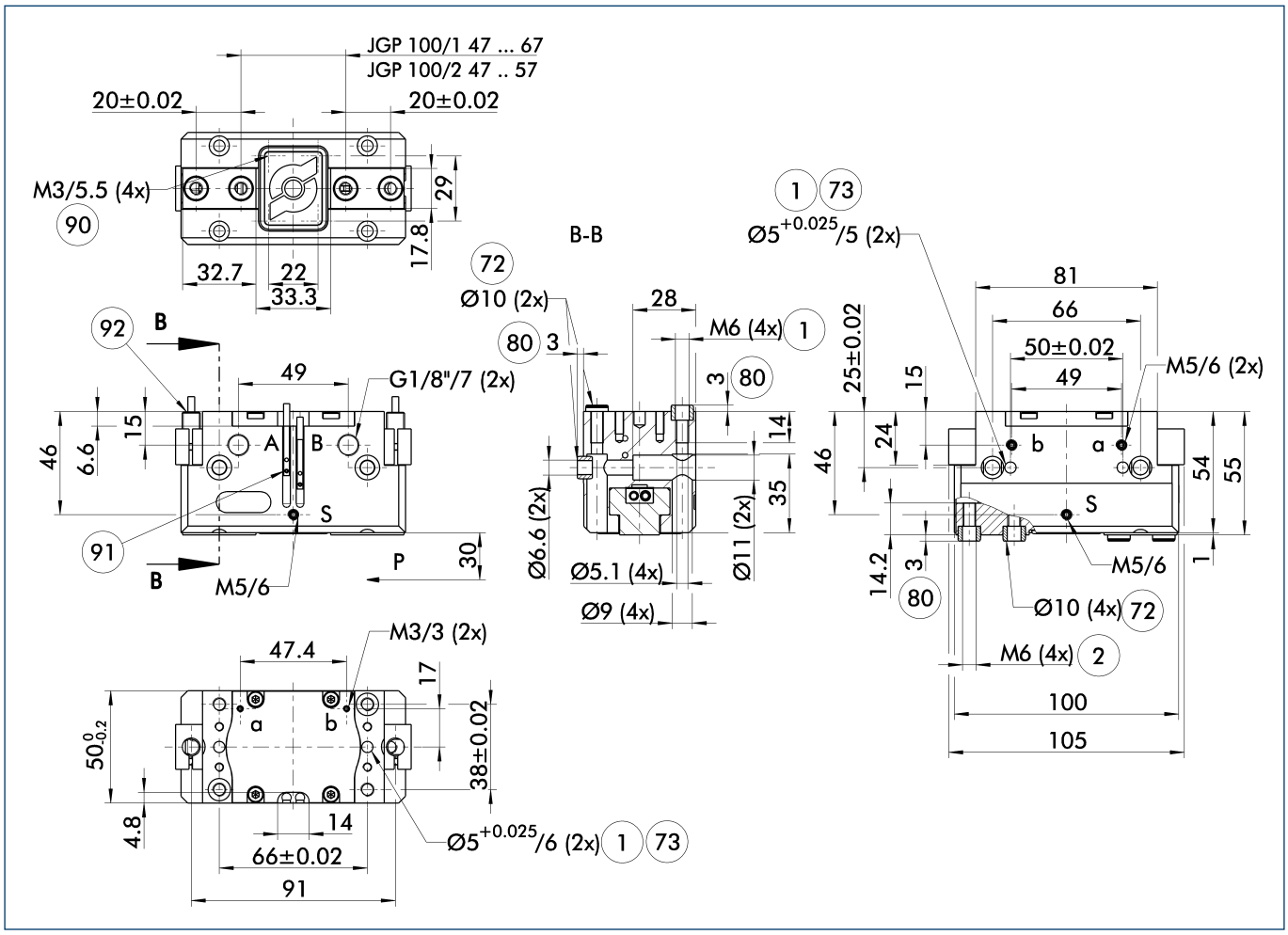

The drawing shows the gripper in the basic version with closed jaws, without dimensional consideration of the options described below.

ⓘ The SDV-P pressure maintenance valve can also be used for I.D. or O.D. gripping alternatively or in addition to the spring-loaded, mechanical gripping force maintenance device (see catalog section on "Accessories").

A, a Main / direct connection, gripper opening

B, b Main / direct connection, gripper closing

S Air purge connection (0.5 ... 1 bar)

(1) Gripper connection

(2) Finger connection

(72) Fit for centering sleeves

(73) Fit for centering pins

(80) Depth of the centering sleeve hole in the mating part

(90) Thread below the cover for fastening external attachments

(91) MMS 22... sensor

(92) IN ... sensor

Maximum permitted finger projection

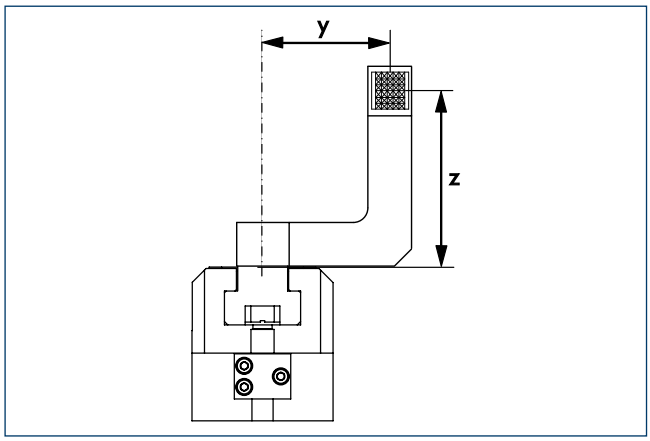

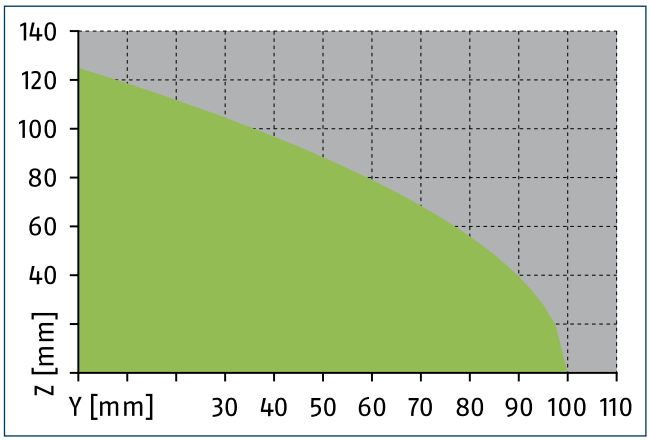

Permitted range Inadmissible range

The curve applies for the base version (Stroke -1). For other versions, the curve must be offset in parallel corresponding to the max. permissible finger length.

Hose-free direct connection M3

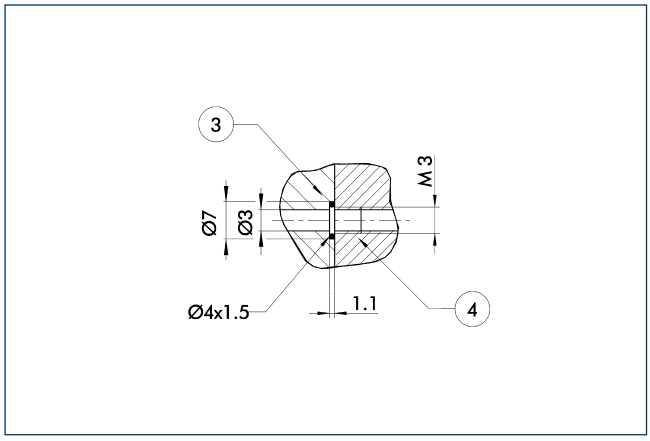

(3) Adapter (4) Gripper

The direct connection is used for supplying compressed air without hoses. Instead, the pressure medium is fed through bore-holes in the mounting plate.

Gripping force maintenance device AS / IS

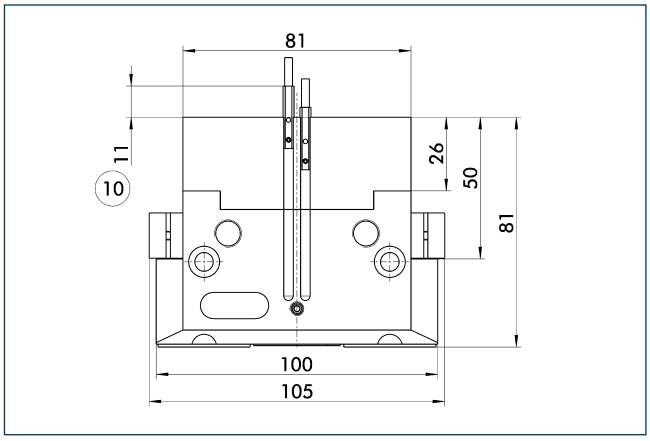

(10) Projection applies only for AS version

The mechanical maintenance of gripping force also assures a minimum gripping force in the case of a loss of pressure. With the AS / S variant, this acts as a closing force, and as an opening force for the IS variant. The maintenance of gripping force element can also be used as a means for increasing gripping force or for single actuated gripping.

SDV-P pressure maintenance valve

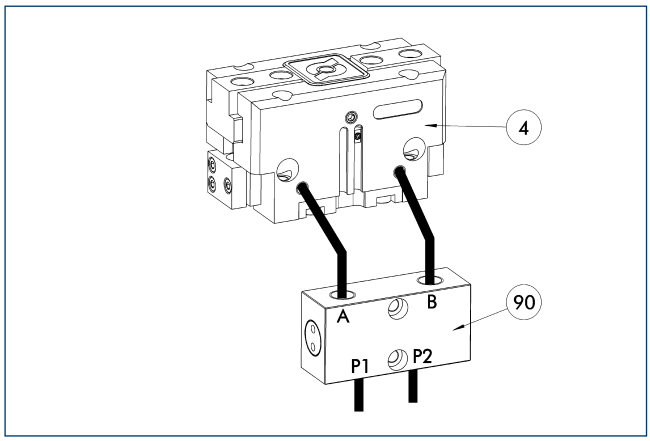

(4) Gripper
(90) SDV-P pressure maintenance valve

The SDV-P pressure maintenance valves ensure that the pressure in the piston chamber of pneumatic gripping, rotary, linear, and quick-change modules is maintained temporarily during an emergency stop.

Description	ID	
Pressure maintenance valve		
SDV-P 04	0403130	

ZBA L-plus 100 intermediate jaws

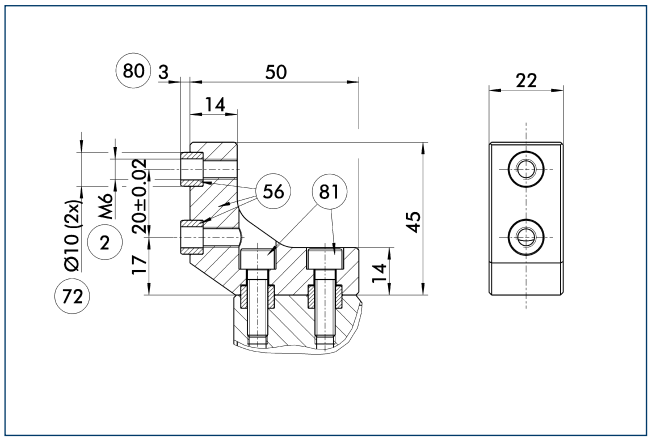

(2) Finger connection
(56) Included in delivery
(72) Fit for centering sleeves
(80) Depth of the centering sleeve hole in the mating part
(81) Not included in the scope of delivery

Optionally intermediate jaws can be used, enabling direct connection and alignment of top jaws and various standard accessories in Z-direction.

Description	ID	Material	Scope of delivery
Intermediate jaws			
ZBA-L-plus 100	0311742	Aluminum	1

BSWS jaw quick-change systems

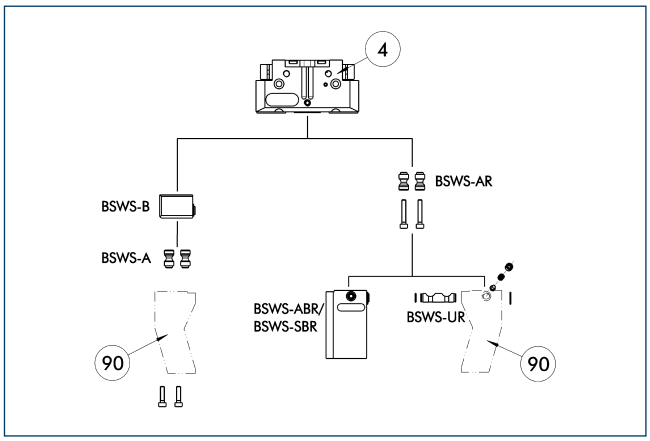

(4) Gripper
(90) Customized gripper fingers

There are various jaw quick-change systems available for the grippers. For detailed information, refer to the appropriate product.

Description	ID	
Jaw quick-change system adapter		
BSWS-AR 100	0300094	
BSWS-A 100	0303026	
Jaw quick-change system base		
BSWS-B 100	0303027	
Finger blanks with jaw quick-change system		
BSWS-ABR-PGZN-plus 100	0300074	
BSWS-SBR-PGZN-plus 100	0300084	
Jaw quick-change system reversed		
BSWS-UR 100	0302993	

ⓘ Only the systems listed in the table can be used.

UZB 100 universal intermediate jaw

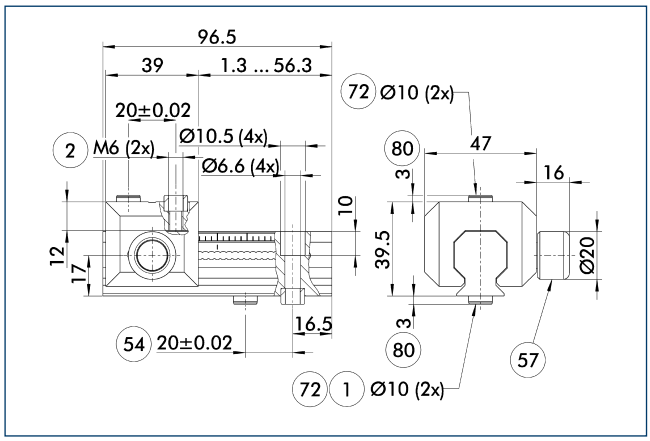

1. Gripper connection
2. Finger connection
54. Optional right or left connection
57. Locking
72. Fit for centering sleeves
80. Depth of the centering sleeve hole in the mating part

The universal intermediate jaw allows fast tool-free and reliable plugging and shifting of top jaws at the gripper.

Description	ID	Grid dimension [mm]
Universal intermediate jaw		
UZB 100	0300044	2.5
UZB-S 100	5518272	2.5
Finger blanks		
ABR-PGZN-plus 100	0300012	
SBR-PGZN-plus 100	0300022	

FMS-ZBA / ZBP 100 force-measuring jaws

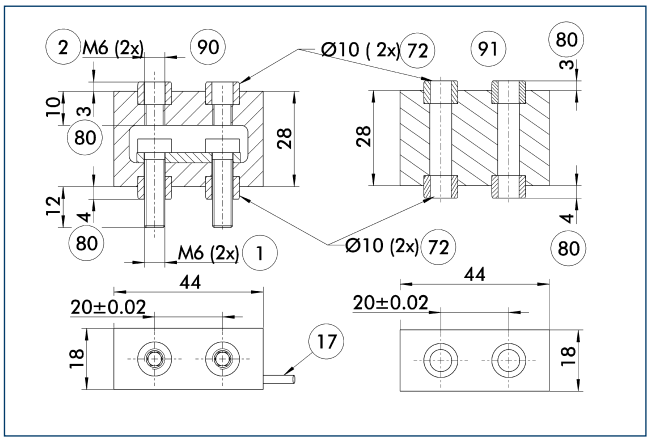

1. Gripper connection
2. Finger connection
17. Cable outlet
72. Fit for centering sleeves
80. Depth of the centering sleeve hole in the mating part
90. Active intermediate jaws
91. Passive intermediate jaws

Force measuring jaws measure gripping forces, but can also determine workpiece weights or dimensional deviations. There are active and passive intermediate jaws (FMS-ZBA or FMS-ZBP). At least one active force measuring jaw is required per gripper, the rest can be passive. For each active jaw, a FMS-A control unit and a FMS-AK connection cable are required.

Description	ID	Often combined
Active intermediate jaws		
FMS-ZBA 100	0301836	
Passive intermediate jaws		
FMS-ZBP 100	0301837	
Connection cables		
FMS-AK0200	0301820	●
FMS-AK0500	0301821	
FMS-AK1000	0301822	
FMS-AK2000	0301823	
Electronic processor		
FMS-A1	0301810	

ABR- / SBR-PGZN-plus 100 finger blanks

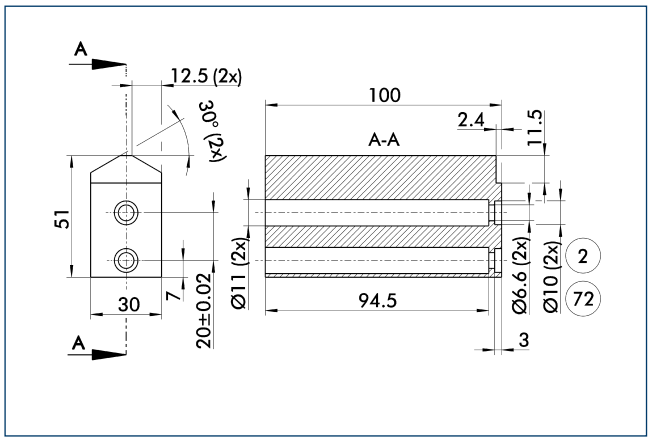

(2) Finger connection (72) Fit for centering sleeves

Finger blanks for customized subsequent machining.

Description	ID	Material	Scope of delivery
Finger blanks			
ABR-PGZN-plus 100	0300012	Aluminum	1
SBR-PGZN-plus 100	0300022	16MnCr5	1

OAS-PGN-plus 100 object distance sensor

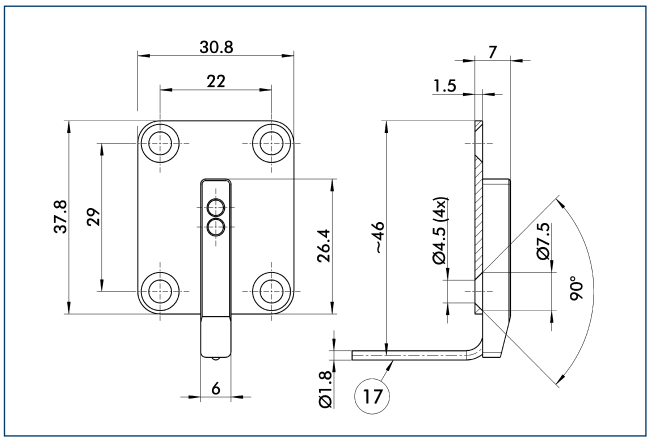

(17) Cable outlet

Description	ID	
Object distance sensor		
OAS-PGN-plus 100	0308879	

Object distance sensor

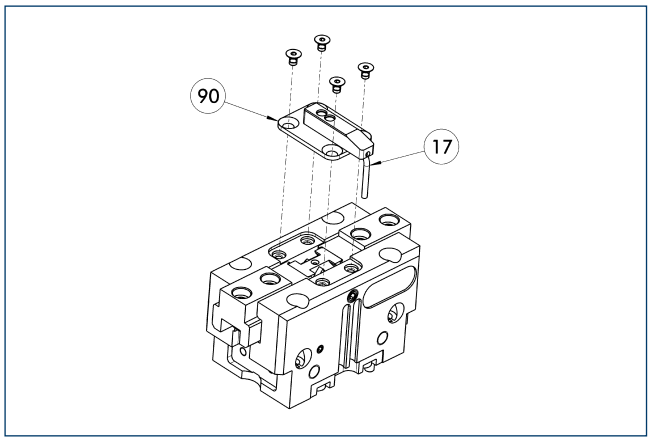

(17) Cable outlet (90) OAS

Optical distance and presence sensor for direct mounting on the gripper. One OAS sensor per gripper can be assembled.

Description	ID	
Object distance sensor		
OAS-PGN-plus 100	0308879	
Electronic processor		
OAS-V09-D	0308865	
OAS-V10-A	0308867	
OAS-V10-D	0308866	

ⓘ The evaluation of the OAS can be done with either an analog or digital evaluation unit and with or without a display. The states which should be detected can be simply taught.

Attachment valves

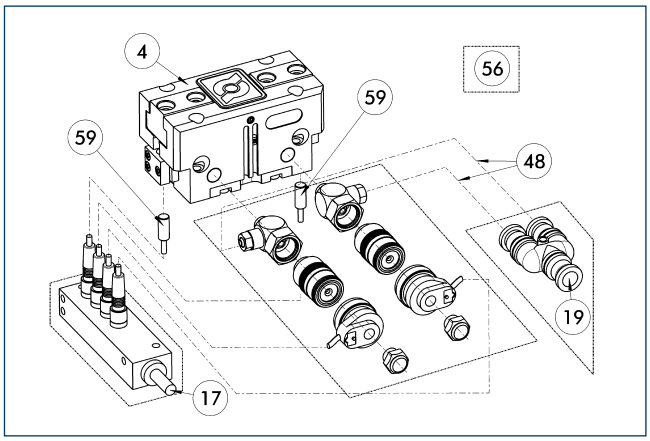

(4) Gripper (48) Hose
(17) Cable outlet (56) Included in delivery
(19) Air connection (59) Monitoring gripping

For each unit one attachment valve ABV is required, optional with distributor for sensors and valves. Attachment valves increase the efficiency, reduce the installation work and air consumption and simplify air supply. For details please refer to the "Accessories" catalog section.

Description	ID	Often combined
Attachment valves		
ABV-MV30-G1/8	0303328	
ABV-MV30-G1/8-V2-M8	0303396	
ABV-MV30-G1/8-V4-M8	0303366	●
ABV-MV30-G1/8-V8-M8	0303367	

Modular assembly automation

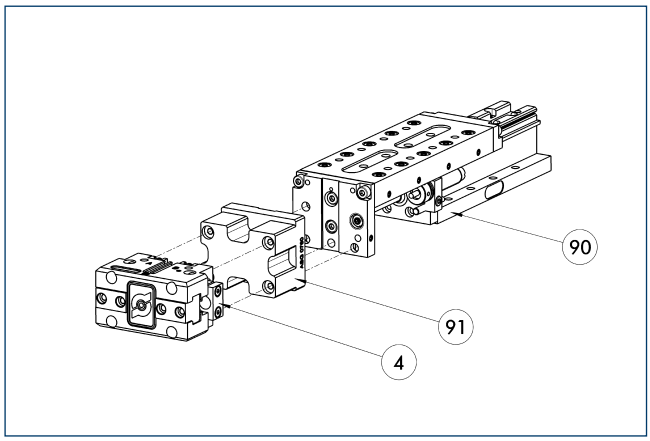

(4) Gripper
(90) CLM / KLM / LM / ELM / ELS / HLM linear module
(91) ASG adapter plate

Gripper and linear modules can be combined with standard adapters out of the modular assembly system. For more information see our catalog "Modular Assembly Automation".

VB-PGN-plus 100 valve box

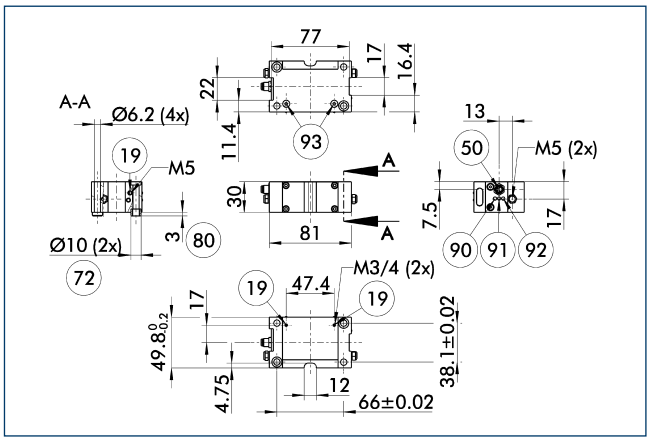

(19) Air connection
(50) Electrical connection
(72) Fit for centering sleeves
(80) Depth of the centering sleeve hole in the mating part
(90) Power supply
(91) Valve switched b for gripper opened
(92) Valve switched a for gripper opened
(93) Valve switched a and b

Description	ID	
Valve box		
VB-PGN-plus 100	0310094	

Valve box

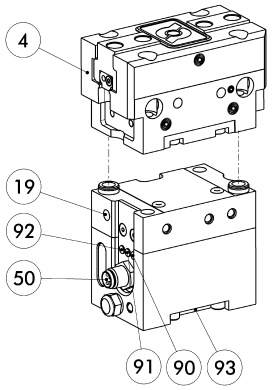

(4) Gripper
(19) Air connection
(50) Electrical connection
(90) Power supply
(91) Valve switched b for gripper opened
(92) Valve switched a for gripper opened
(93) Direct connection for hose-free compressed air supply

Ready to install, local control solution! Valves are attached directly to the handling component. As a result, cycle times are significantly reduced and the number of hoses, commissioning times, and air consumption are minimised while maximum process safety is assured.

Description	ID	Often combined
Valve box		
VB-PGN-plus 100	0310094	
Connection cables		
KA BG08-L 4P-0500	0307767	●
KA BG08-L 4P-1000	0307768	
KA BW08-L 4P-0500	0307765	
KA BW08-L 4P-1000	0307766	
KA BG08-L 3P-0300-PNP	0301622	●
KA BG08-L 3P-0500-PNP	0301623	
KA BW08-L 3P-0300-NPN	0301602	
KA BW08-L 3P-0300-PNP	0301594	
KA BW08-L 3P-0500-NPN	9641116	
KA BW08-L 3P-0500-PNP	0301502	
Sensor distributor		
V2-M8-4P-2XM8-3P	0301380	
Cable extensions		
KV BW08-SG08 3P-0030-PNP	0301495	
KV BW08-SG08 3P-0100-PNP	0301496	
KV BW08-SG08 3P-0200-PNP	0301497	●
Clip for plug / socket		
CLI-M8	0301463	

ⓘ Valve and sensor signals of the unit can be merged on a bus distributor so that the electrical as well as the pneumatic connections can be decentralized.

Inductive proximity switches

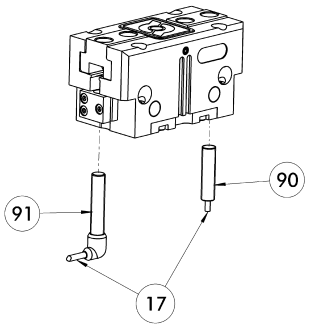

(17) Cable outlet
(90) IN ... sensor
(91) IN ...-SA sensor

Directly mounted limit position monitor.

Description	ID	Often combined
Inductive proximity switches		
IN 80-S-M12	0301578	
IN 80-S-M8	0301478	●
INK 80-S	0301550	
Inductive proximity switches with lateral outlet		
IN 80-S-M12-SA	0301587	
IN 80-S-M8-SA	0301483	●
INK 80-S-SA	0301566	
Cable extensions		
KV BG12-SG12 3P-0030-PNP	0301999	
KV BG12-SG12 3P-0060-PNP	0301998	
KV BW08-SG08 3P-0030-PNP	0301495	
KV BW08-SG08 3P-0100-PNP	0301496	
KV BW08-SG08 3P-0200-PNP	0301497	●
KV BW12-SG12 3P-0030-PNP	0301595	
KV BW12-SG12 3P-0100-PNP	0301596	
KV BW12-SG12 3P-0200-PNP	0301597	
Clip for plug / socket		
CLI-M12	0301464	
CLI-M8	0301463	
Connection cables		
KA BG08-L 3P-0300-PNP	0301622	●
KA BG08-L 3P-0500-PNP	0301623	
KA BG12-L 3P-0500-PNP	30016369	
KA BW08-L 3P-0300-PNP	0301594	
KA BW08-L 3P-0500-PNP	0301502	
KA BW12-L 3P-0300-PNP	0301503	
KA BW12-L 3P-0500-PNP	0301507	
Sensor distributor		
V2-M8	0301775	●
V2-M12	0301776	●
V4-M12	0301747	
V4-M8	0301746	

ⓘ Two sensors (closer/S) are required for each unit, plus extension cables as an option. Please note the minimum permitted bending radii for the sensor cables, which are generally 35 mm.

Flexible position sensor

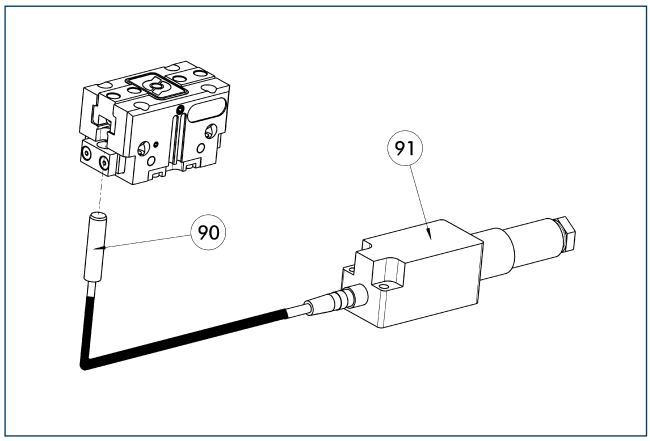

90 FPS-S sensor

91 FPS-F5 / -F5 T electronic processor

Flexible position monitoring of up to five positions.

Description	ID	Often combined
Mounting kit for FPS		
AS-FPS-PGZN-plus 100-1	0301634	
Electronic processor		
FPS-F5	0301805	●
FPS-F5 T	0301807	
Sensor		
FPS-S M8	0301704	
Clip for plug / socket		
CLI-M8	0301463	

ⓘ When using a FPS system, a FPS sensor (FPS-S) and a control unit (FPS-F5 / F5 T) are required for each gripper as well as a mounting kit (AS), if listed. Cable extensions (KV) are available as options in the "Accessories" catalog section.

MMS electronic magnetic switches

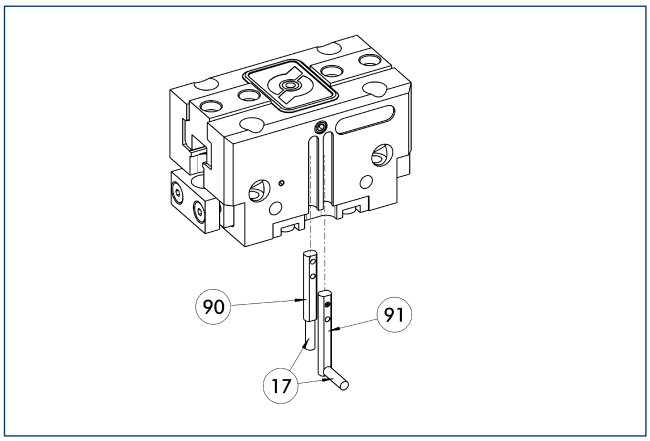

17 Cable outlet

90 MMS 22... sensor

91 MMS 22...-SA sensor

End position monitoring for mounting in the C-slot.

Description	ID	Often combined
MMS electronic magnetic switches		
MMS 22-S-M8-PNP	0301032	●
MMSK 22-S-PNP	0301034	
MMS electronic magnetic switches with lateral cable outlet		
MMS 22-S-M8-PNP-SA	0301042	●
MMSK 22-S-PNP-SA	0301044	
Reed switches		
RMS 22-S-M8	0377720	●
Cable extensions		
KV BW08-SG08 3P-0030-PNP	0301495	
KV BW08-SG08 3P-0100-PNP	0301496	
KV BW08-SG08 3P-0200-PNP	0301497	●
Clip for plug / socket		
CLI-M8	0301463	
Connection cables		
KA BG08-L 3P-0300-PNP	0301622	●
KA BG08-L 3P-0500-PNP	0301623	
KA BW08-L 3P-0300-PNP	0301594	
KA BW08-L 3P-0500-PNP	0301502	
RSS radio sensor system		
RSS-T2	0377710	
Sensor distributor		
V2-M8	0301775	●
V4-M8	0301746	
V8-M8	0301751	

ⓘ Two sensors (closer/S) are required for each unit, plus extension cables as an option. Please note the minimum permitted bending radii for the sensor cables, which are generally 35 mm.

MMS PI1 programmable magnetic switches

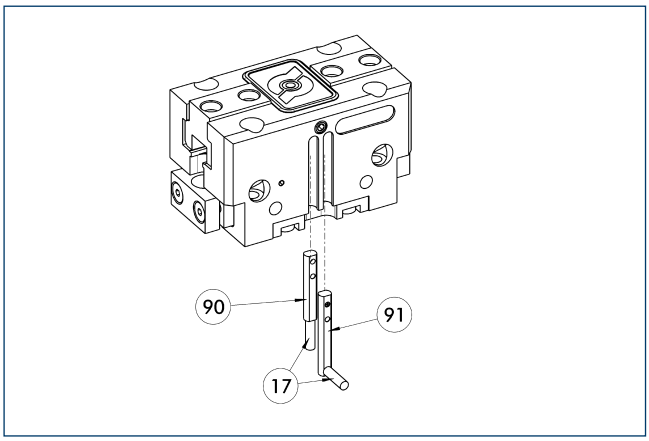

17 Cable outlet
91 MMS 22...-PI1-...-SA sensor
90 MMS 22...-PI1-... sensor

Position query with one programmable position per sensor and electronics integrated in sensor. Programmable via MT magnet teaching tool (included in the scope of delivery) or ST plug teaching tool (optional). Limit position query mounted in C-groove. If the ST plug teaching tools are listed in the table, teaching can only take place with the ST plug teaching tools.

Description	ID	Often combined
MMS PI1 programmable magnetic switches		
MMS 22-PI1-S-M8-PNP	0301160	●
MMSK 22-PI1-S-PNP	0301162	
MMS PI1-HD programmable magnetic switches with stainless steel housing		
MMS 22-PI1-S-M8-PNP-HD	0301110	●
MMSK 22-PI1-S-PNP-HD	0301112	
MMS PI1 programmable magnetic switches with lateral cable outlet		
MMS 22-PI1-S-M8-PNP-SA	0301166	●
MMSK 22-PI1-S-PNP-SA	0301168	

ⓘ Two sensors (closer/S) are required for each unit, plus extension cables as an option. Please note the minimum permitted bending radii for the sensor cables, which are generally 35 mm. Connection cable, cable extensions, and sensor distributors can be found in the table for the MMS 22.

MMS PI2 programmable magnetic switches

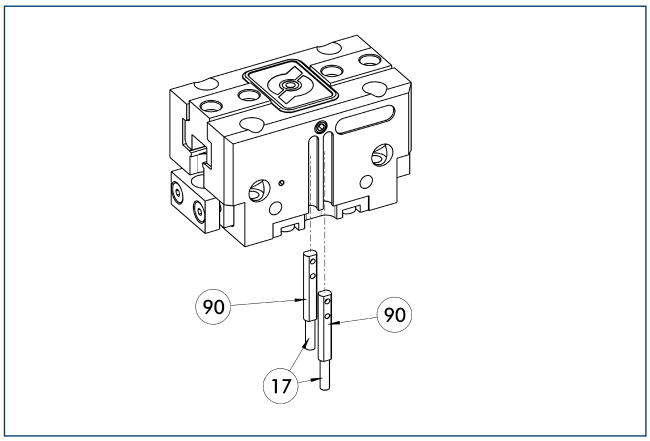

17 Cable outlet
90 MMS 22...-PI2-... sensor

Position query with two programmable positions per sensor and electronics integrated in sensor. Programmable via MT magnet teaching tool (included in the scope of delivery) or ST plug teaching tool (optional). Limit position query mounted in C-groove. If the ST plug teaching tools are listed in the table, teaching can only take place with the ST plug teaching tools.

Description	ID	Often combined
MMS PI2 programmable magnetic switches		
MMS 22-PI2-S-M8-PNP	0301180	●
MMSK 22-PI2-S-PNP	0301182	
MMS PI2-HD programmable magnetic switches with stainless steel housing		
MMS 22-PI2-S-M8-PNP-HD	0301130	●
MMSK 22-PI2-S-PNP-HD	0301132	

ⓘ Per unit one sensor (closer/S) is required, optionally a cable extension. Please note the minimum permitted bending radii for the sensor cables, which are generally 35 mm. Connection cable, cable extensions, and sensor distributors can be found in the table for the MMS-P 22.

MMS-P programmable magnetic switches

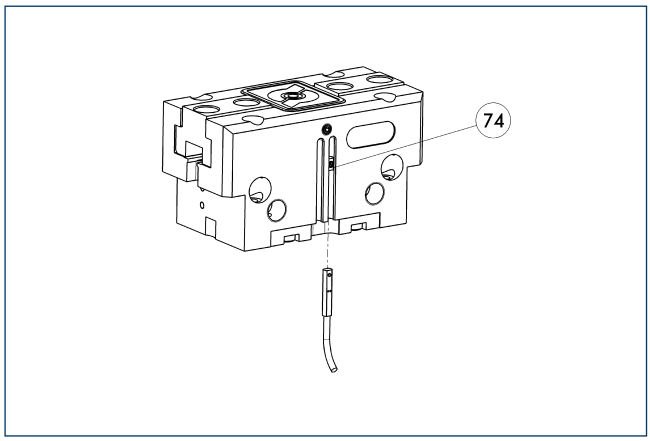

74 Stop for MMS-P

Position monitoring with two programmable positions per sensor. The end position monitoring is mounted in the C-slot.

Description	ID	Often combined
MMS-P programmable magnetic switches		
MMSK-P 22-S-PNP	0301371	
MMS-P 22-S-M8-PNP	0301370	●
Clip for plug / socket		
CLI-M8	0301463	
Connection cables		
KA BG08-L 4P-0500	0307767	●
KA BG08-L 4P-1000	0307768	
KA BW08-L 4P-0500	0307765	
KA BW08-L 4P-1000	0307766	
Sensor distributor		
V2-M8-4P-2XM8-3P	0301380	

ⓘ Per unit one sensor (closer/S) is required, optionally a cable extension. Please note the minimum permitted bending radii for the sensor cables, which are generally 35 mm.

APS-Z80 analog position sensor

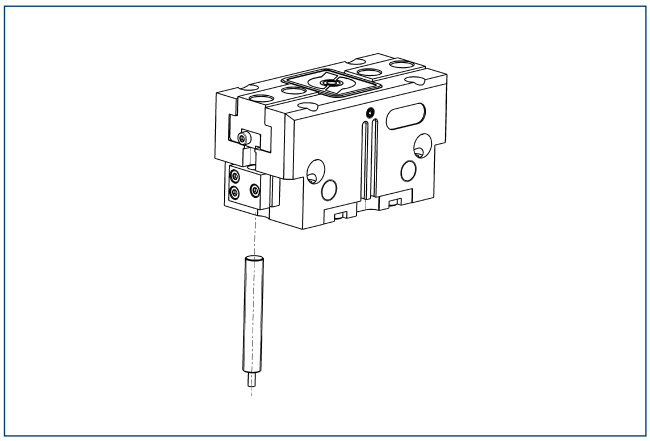

Contactlessly measuring, analog multi-position monitoring for any number of positions.

Description	ID	Often combined
Mounting kit for APS-Z80		
AS-APS-Z80-PGZN-plus 100-1	0302109	
AS-APS-Z80-PGZN-plus 100-2	0302110	
Sensor		
APS-Z80-K	0302072	
APS-Z80-M8	0302070	●

ⓘ When using an APS system, one mounting kit (AS-APS-Z80) and one APS-Z80 sensor is required per gripper.

APS-M1 analog position sensor

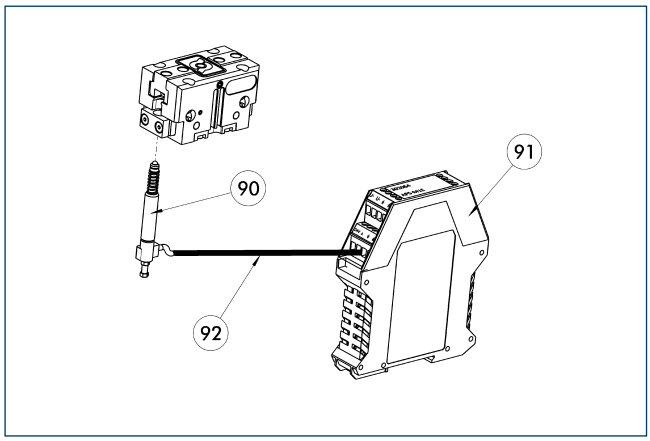

90 APS-M1S sensor
91 APS-M1E electronic processor
92 APS-K extension cable

Analog multi position monitoring for any desired positions.

Description	ID	Often combined
Mounting kit for APS-M1		
AS-APS-M1-PGZN-plus 100-1	0302079	
Connection cables		
APS-K0200	0302066	●
APS-K0700	0302068	
Electronic processor		
APS-M1E	0302064	
Sensor		
APS-M1S	0302062	

ⓘ When using an APS system, for each gripper a mounting kit (AS-APS-M1), an APS-M1S sensor (incl. 3 m cable) as well as an electronics (APS-M1e) are required. An extension cable (APS-K) can be connected between the sensor and the electronics as an option. The max. cable length between the sensor and the electronics is 10 m, between the electronics and their control unit (PLC) it is max. 1 m.

Cylindrical reed switches

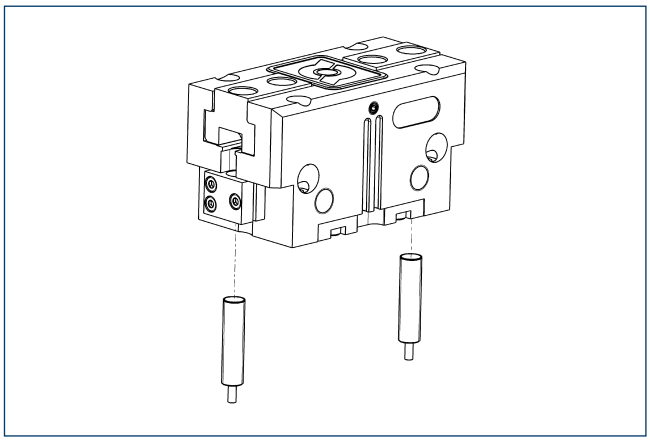

Limit position monitor can be mounted with mounting kit.

Description	ID	
Mounting kit for proximity switch		
AS-RMS 80 PGN/PZN-plus 100/125	0377726	
Reed switches		
RMS 80-S-M8	0377721	

ⓘ Two sensors (closer/S) are required for each unit, plus extension cables as an option. This mounting kit needs to be ordered optionally as an accessory. Two mounting kits are required per gripper. Please note the minimum permitted bending radii for the sensor cables, which are generally 35 mm.

JGP 125

SCHUNK Grippers pneumatic | 2-Finger Parallel Grippers | Universal Gripper

Gripping force, O.D. gripping

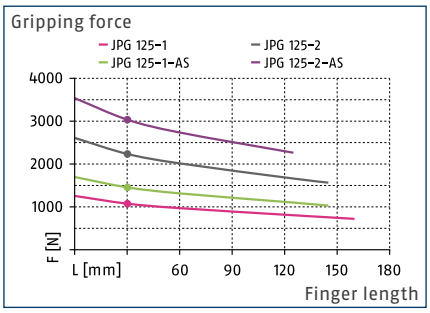

Gripping force, I.D. gripping

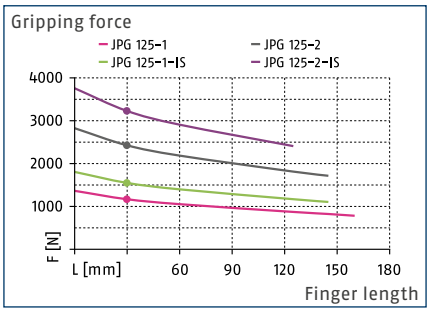

Finger load

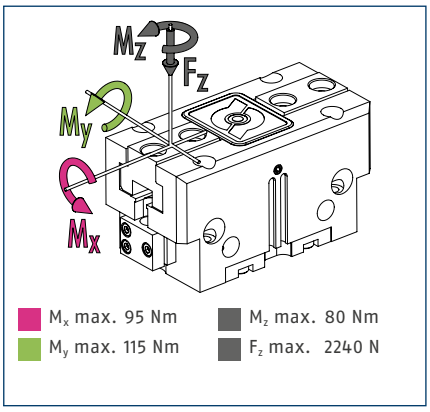

ⓘ The indicated moments and forces are static values, apply per base jaw and may occur simultaneously. M_y may arise in addition to the moment generated by the gripping force itself. If the max. permitted finger weight is exceeded, it is impreative to throttle the air supply so that the jaw movement occurs without any hitting or bouncing. Service life may be reduced.

Technical data

Description		JGP 125-1	JGP 125-2	JGP 125-1-AS	JGP 125-2-AS	JGP 125-1-IS	JGP 125-2-IS
ID		0308650	0308655	0308651	0308656	0308652	0308657
Stroke per jaw	[mm]	13	6	13	6	13	6
Closing- / opening force	[N]	1080/1170	2240/2420	1470/-	3040/-	-/1560	-/3220
min. spring force	[N]			390	800	390	800
Weight	[kg]	1.35	1.35	1.85	1.85	1.85	1.85
Recommended workpiece weight	[kg]	5.4	11.2	5.4	11.2	5.4	11.2
Fluid consumption per double stroke	[cm³]	87	87	119	119	166	166
min. / max. operating pressure	[bar]	2.5/8	2.5/8	4/6.5	4/6.5	4/6.5	4/6.5
Nominal operating pressure	[bar]	6	6	6	6	6	6
Closing- / opening time	[s]	0.1/0.1	0.1/0.1	0.08/0.12	0.08/0.12	0.12/0.08	0.12/0.08
Closing- / opening time only with spring	[s]			0.30	0.30	0.30	0.30
max. permitted finger length	[mm]	160	145	145	125	145	125
max. permitted weight per finger	[kg]	2.1	2.1	2.1	2.1	2.1	2.1
IP class		40	40	40	40	40	40
min. / max. ambient temperature	[°C]	5/90	5/90	5/90	5/90	5/90	5/90
Repeat accuracy	[mm]	0.01	0.01	0.01	0.01	0.01	0.01

Main view

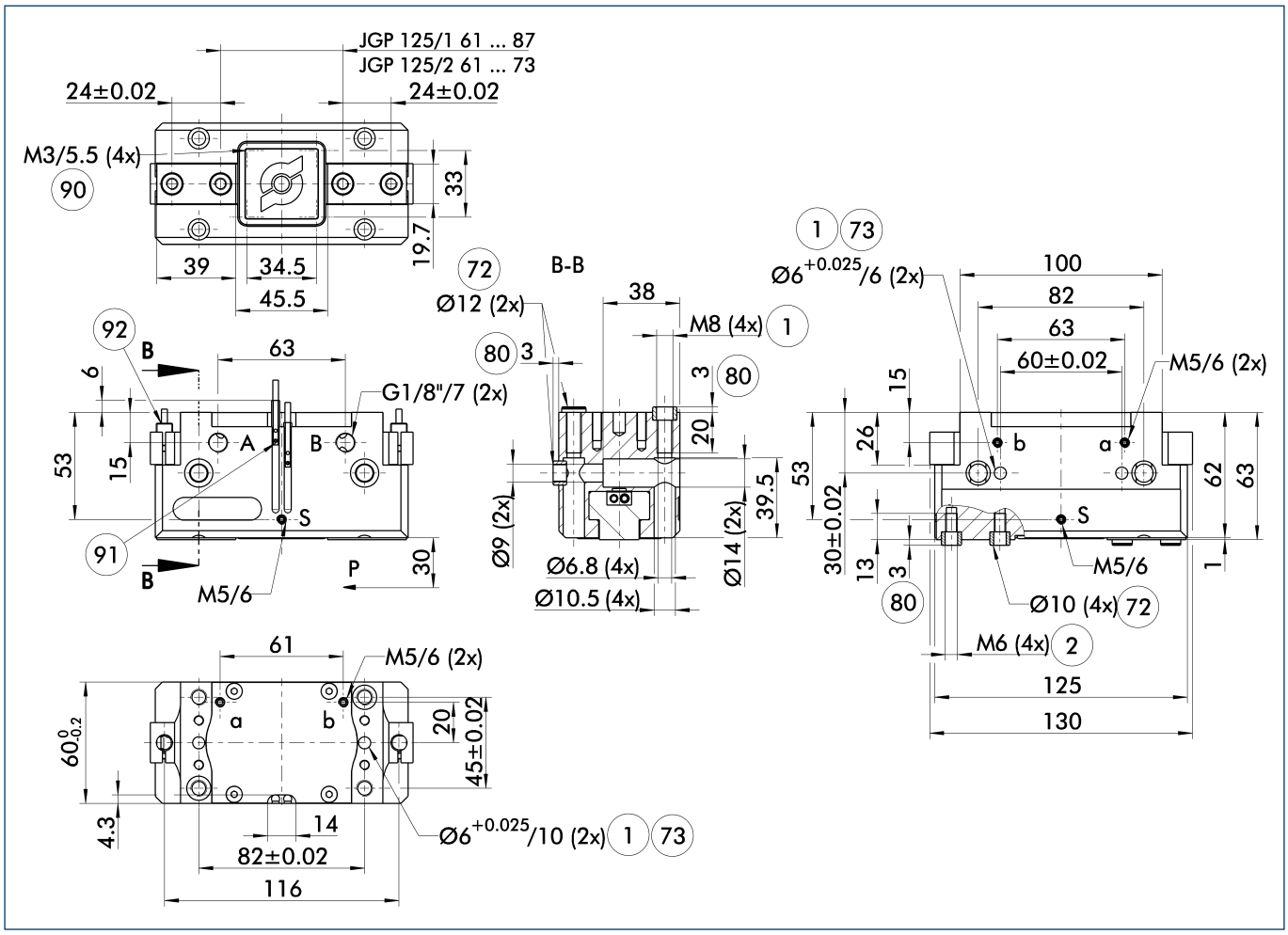

The drawing shows the gripper in the basic version with closed jaws, without dimensional consideration of the options described below.

ⓘ The SDV-P pressure maintenance valve can also be used for I.D. or O.D. gripping alternatively or in addition to the spring-loaded, mechanical gripping force maintenance device (see catalog section on "Accessories").

A, a Main / direct connection, gripper opening

B, b Main / direct connection, gripper closing

S Air purge connection (0.5 ... 1 bar)

(1) Gripper connection

(2) Finger connection

(72) Fit for centering sleeves

(73) Fit for centering pins

(80) Depth of the centering sleeve hole in the mating part

(90) Thread below the cover for fastening external attachments

(91) MMS 22... sensor

(92) IN ... sensor

Maximum permitted finger projection

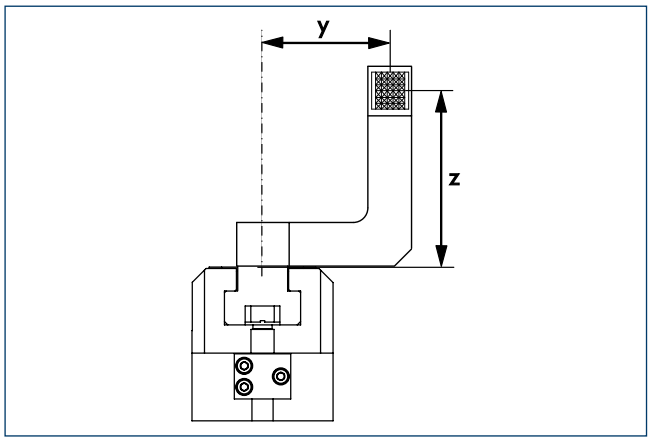

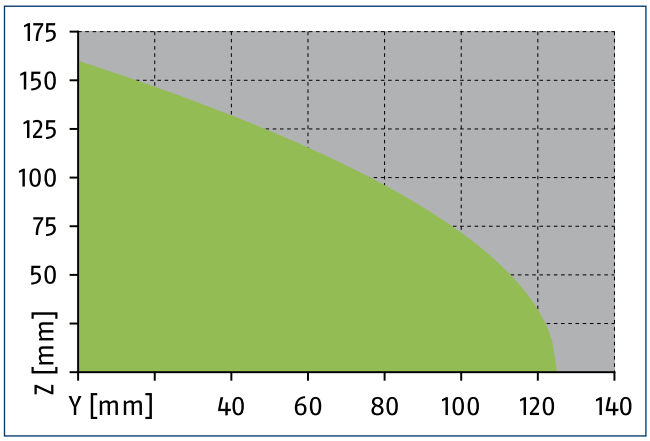

Permitted range Inadmissible range

The curve applies for the base version (Stroke -1). For other versions, the curve must be offset in parallel corresponding to the max. permissible finger length.

Hose-free direct connection M5

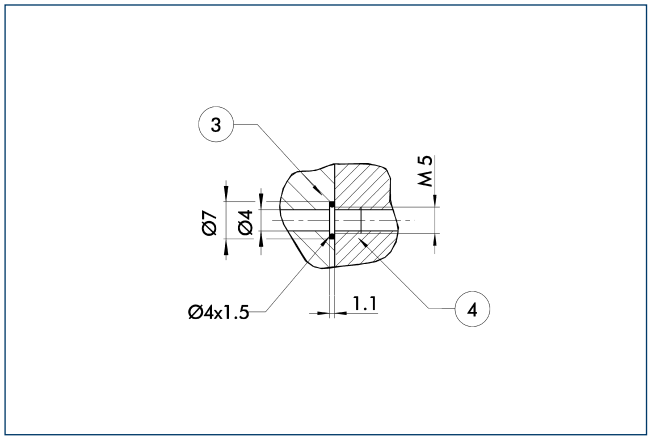

3 Adapter 4 Gripper

The direct connection is used for supplying compressed air without hoses. Instead, the pressure medium is fed through bore-holes in the mounting plate.

Gripping force maintenance device AS / IS

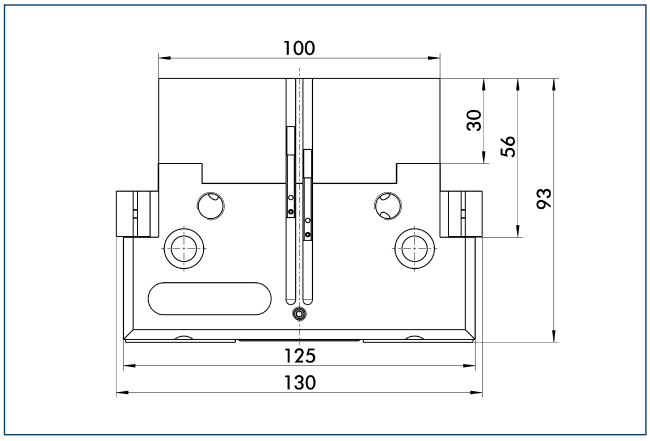

The mechanical maintenance of gripping force also assures a minimum gripping force in the case of a loss of pressure. With the AS / S variant, this acts as a closing force, and as an opening force for the IS variant. The maintenance of gripping force element can also be used as a means for increasing gripping force or for single actuated gripping.

SDV-P pressure maintenance valve

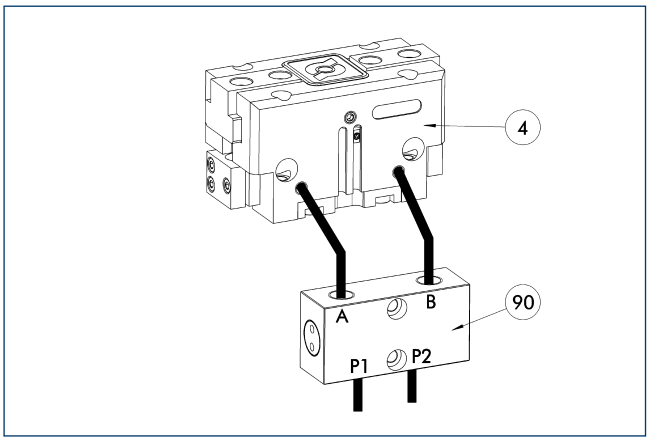

(4) Gripper
(90) SDV-P pressure maintenance valve

The SDV-P pressure maintenance valves ensure that the pressure in the piston chamber of pneumatic gripping, rotary, linear, and quick-change modules is maintained temporarily during an emergency stop.

Description	ID	
Pressure maintenance valve		
SDV-P 04	0403130	

ZBA L-plus 125 intermediate jaws

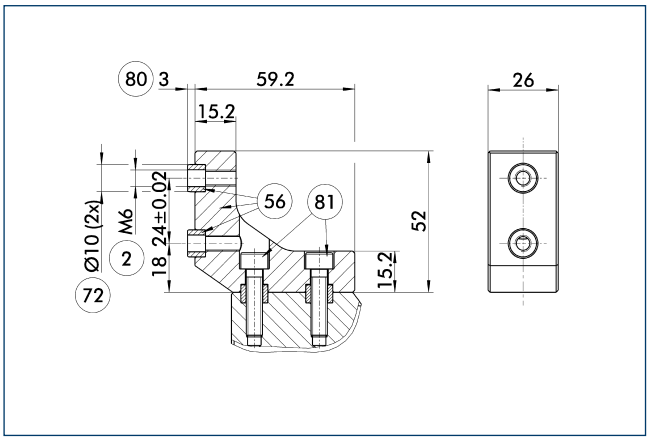

(2) Finger connection
(56) Included in delivery
(72) Fit for centering sleeves
(80) Depth of the centering sleeve hole in the mating part
(81) Not included in the scope of delivery

Optionally intermediate jaws can be used, enabling direct connection and alignment of top jaws and various standard accessories in Z-direction.

Description	ID	Material	Scope of delivery
Intermediate jaws			
ZBA-L-plus 125	0311752	Aluminum	1

BSWS jaw quick-change systems

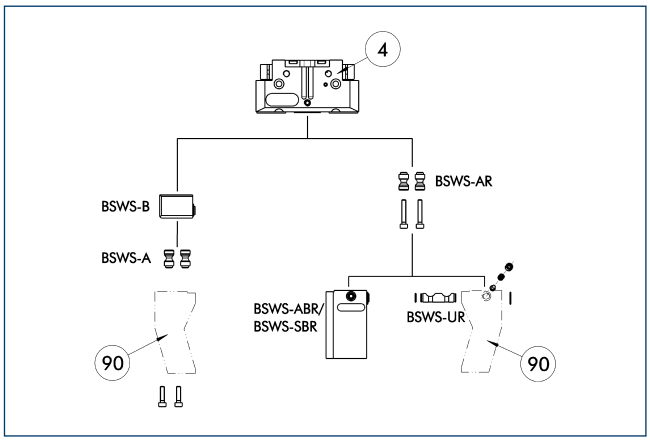

(4) Gripper
(90) Customized gripper fingers

There are various jaw quick-change systems available for the grippers. For detailed information, refer to the appropriate product.

Description	ID	
Jaw quick-change system adapter		
BSWS-AR 125	0300095	
BSWS-A 125	0303028	
Jaw quick-change system base		
BSWS-B 125	0303029	
Finger blanks with jaw quick-change system		
BSWS-ABR-PGZN-plus 125	0300075	
BSWS-SBR-PGZN-plus 125	0300085	
Jaw quick-change system reversed		
BSWS-UR 125	0302994	

ⓘ Only the systems listed in the table can be used.

UZB 125 universal intermediate jaw

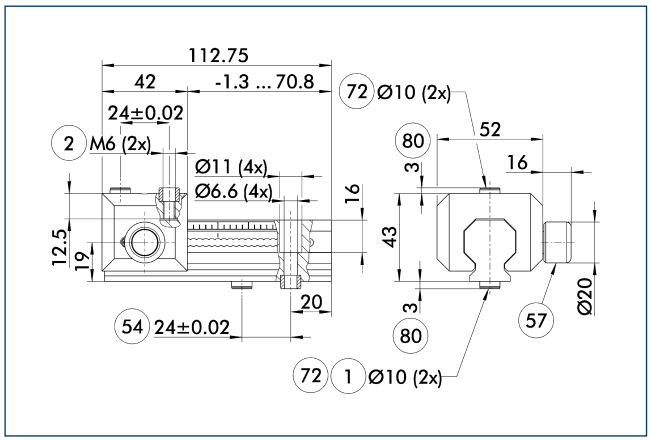

1 Gripper connection
2 Finger connection
54 Optional right or left connection
57 Locking
72 Fit for centering sleeves
80 Depth of the centering sleeve hole in the mating part

The universal intermediate jaw allows fast tool-free and reliable plugging and shifting of top jaws at the gripper.

Description	ID	Grid dimension [mm]
Universal intermediate jaw		
UZB 125	0300045	3
UZB-S 125	5518273	3
Finger blanks		
ABR-PGZN-plus 125	0300013	
SBR-PGZN-plus 125	0300023	

FMS-ZBA / ZBP 125 force-measuring jaws

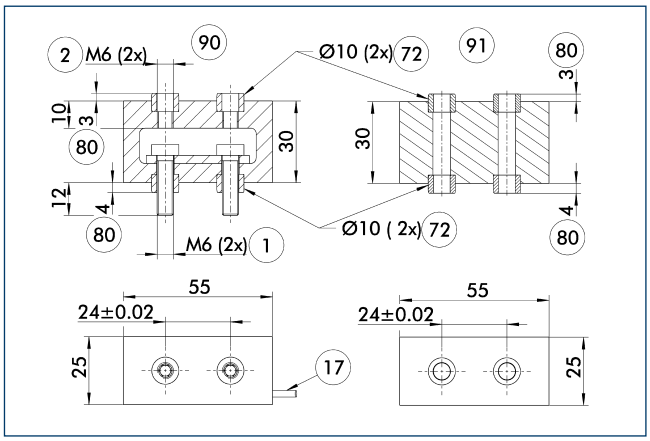

1 Gripper connection
2 Finger connection
17 Cable outlet
72 Fit for centering sleeves
80 Depth of the centering sleeve hole in the mating part
90 Active intermediate jaws
91 Passive intermediate jaws

Force measuring jaws measure gripping forces, but can also determine workpiece weights or dimensional deviations. There are active and passive intermediate jaws (FMS-ZBA or FMS-ZBP). At least one active force measuring jaw is required per gripper, the rest can be passive. For each active jaw, a FMS-A control unit and a FMS-AK connection cable are required.

Description	ID	Often combined
Active intermediate jaws		
FMS-ZBA 125	0301838	
Passive intermediate jaws		
FMS-ZBP 125	0301839	
Connection cables		
FMS-AK0200	0301820	●
FMS-AK0500	0301821	
FMS-AK1000	0301822	
FMS-AK2000	0301823	
Electronic processor		
FMS-A1	0301810	

ABR- / SBR-PGZN-plus 125 finger blanks

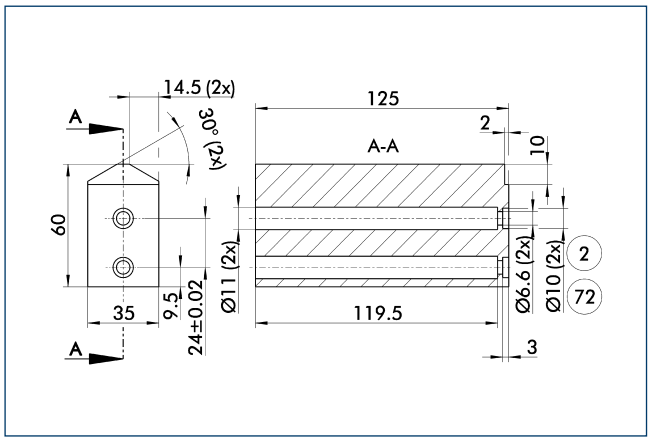

(2) Finger connection (72) Fit for centering sleeves

Finger blanks for customized subsequent machining.

Description	ID	Material	Scope of delivery
Finger blanks			
ABR-PGZN-plus 125	0300013	Aluminum	1
SBR-PGZN-plus 125	0300023	16MnCr5	1

OAS-PGN-plus 125 object distance sensor

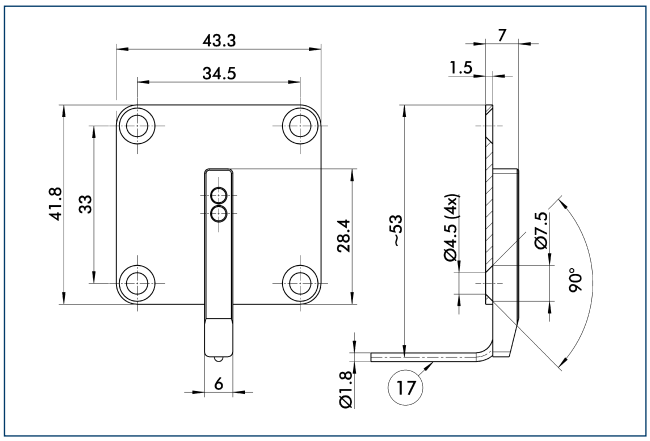

(17) Cable outlet

Description	ID	
Object distance sensor		
OAS-PGN-plus 125	0308880	

Object distance sensor

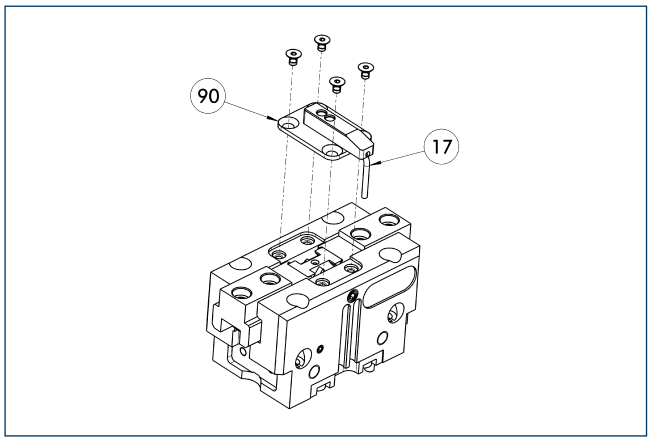

(17) Cable outlet (90) OAS

Optical distance and presence sensor for direct mounting on the gripper. One OAS sensor per gripper can be assembled.

Description	ID	
Object distance sensor		
OAS-PGN-plus 125	0308880	
Electronic processor		
OAS-V09-D	0308865	
OAS-V10-A	0308867	
OAS-V10-D	0308866	

ⓘ The evaluation of the OAS can be done with either an analog or digital evaluation unit and with or without a display. The states which should be detected can be simply taught.

Attachment valves

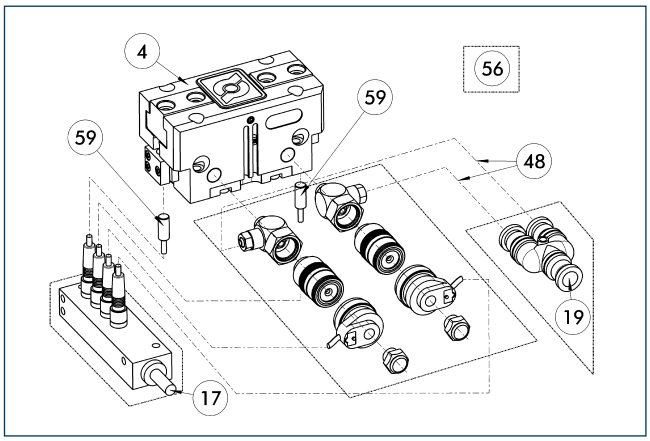

(4) Gripper
(17) Cable outlet
(19) Air connection
(48) Hose
(56) Included in delivery
(59) Monitoring gripping

For each unit one attachment valve ABV is required, optional with distributor for sensors and valves. Attachment valves increase the efficiency, reduce the installation work and air consumption and simplify air supply. For details please refer to the "Accessories" catalog section.

Description	ID	Often combined
Attachment valves		
ABV-MV30-G1/8	0303328	
ABV-MV30-G1/8-V2-M8	0303396	
ABV-MV30-G1/8-V4-M8	0303366	●
ABV-MV30-G1/8-V8-M8	0303367	

Modular assembly automation

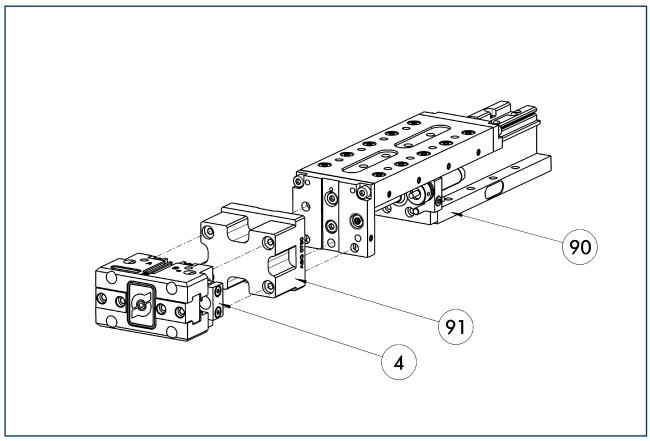

(4) Gripper
(91) ASG adapter plate
(90) CLM / KLM / LM / ELM / ELS / HLM linear module

Gripper and linear modules can be combined with standard adapters out of the modular assembly system. For more information see our catalog "Modular Assembly Automation".

Inductive proximity switches

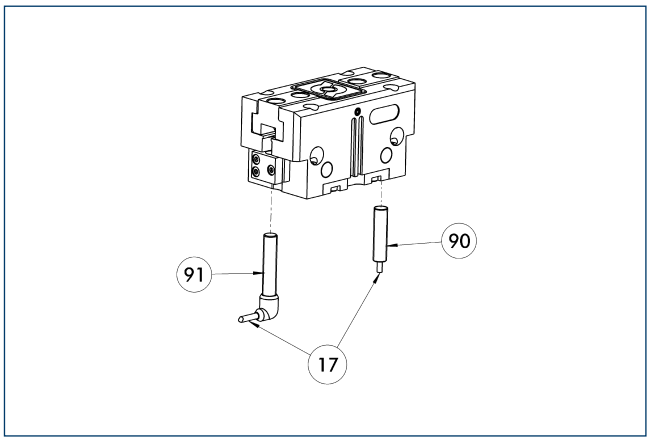

(17) Cable outlet
(91) IN ...-SA sensor
(90) IN ... sensor

Directly mounted limit position monitor.

Description	ID	Often combined
Inductive proximity switches		
IN 80-S-M12	0301578	
IN 80-S-M8	0301478	●
INK 80-S	0301550	
Inductive proximity switches with lateral outlet		
IN 80-S-M12-SA	0301587	
IN 80-S-M8-SA	0301483	●
INK 80-S-SA	0301566	
Cable extensions		
KV BG12-SG12 3P-0030-PNP	0301999	
KV BG12-SG12 3P-0060-PNP	0301998	
KV BW08-SG08 3P-0030-PNP	0301495	
KV BW08-SG08 3P-0100-PNP	0301496	
KV BW08-SG08 3P-0200-PNP	0301497	●
KV BW12-SG12 3P-0030-PNP	0301595	
KV BW12-SG12 3P-0100-PNP	0301596	
KV BW12-SG12 3P-0200-PNP	0301597	
Clip for plug / socket		
CLI-M12	0301464	
CLI-M8	0301463	
Connection cables		
KA BG08-L 3P-0300-PNP	0301622	●
KA BG08-L 3P-0500-PNP	0301623	
KA BG12-L 3P-0500-PNP	30016369	
KA BW08-L 3P-0300-PNP	0301594	
KA BW08-L 3P-0500-PNP	0301502	
KA BW12-L 3P-0300-PNP	0301503	
KA BW12-L 3P-0500-PNP	0301507	
Sensor distributor		
V2-M8	0301775	●
V2-M12	0301776	●
V4-M12	0301747	
V4-M8	0301746	

ⓘ Two sensors (closer/S) are required for each unit, plus extension cables as an option. Please note the minimum permitted bending radii for the sensor cables, which are generally 35 mm.

Flexible position sensor

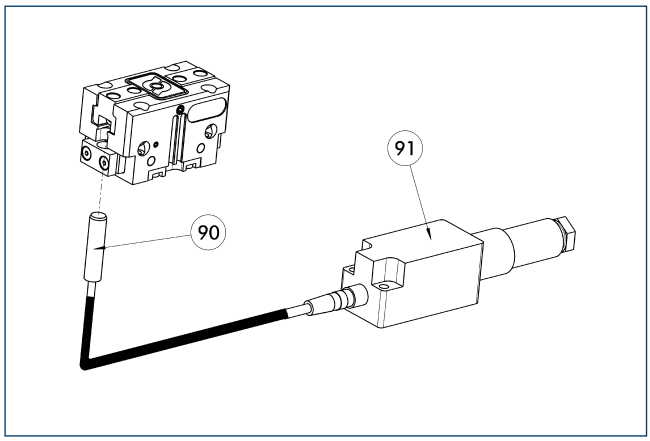

90 FPS-S sensor

91 FPS-F5 / -F5 T electronic processor

Flexible position monitoring of up to five positions.

Description	ID	Often combined
Mounting kit for FPS		
AS-FPS-PGZN-plus 125-1/PZB 160	0301636	
Electronic processor		
FPS-F5	0301805	●
FPS-F5 T	0301807	
Sensor		
FPS-S M8	0301704	
Clip for plug / socket		
CLI-M8	0301463	

ⓘ When using a FPS system, a FPS sensor (FPS-S) and a control unit (FPS-F5 / F5 T) are required for each gripper as well as a mounting kit (AS), if listed. Cable extensions (KV) are available as options in the "Accessories" catalog section.

MMS electronic magnetic switches

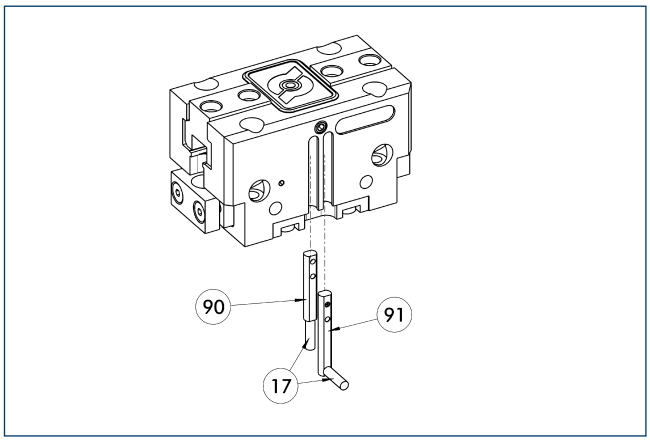

17 Cable outlet

90 MMS 22... sensor

91 MMS 22...-SA sensor

End position monitoring for mounting in the C-slot.

Description	ID	Often combined
MMS electronic magnetic switches		
MMS 22-S-M8-PNP	0301032	●
MMSK 22-S-PNP	0301034	
MMS electronic magnetic switches with lateral cable outlet		
MMS 22-S-M8-PNP-SA	0301042	●
MMSK 22-S-PNP-SA	0301044	
Reed switches		
RMS 22-S-M8	0377720	●
Cable extensions		
KV BW08-SG08 3P-0030-PNP	0301495	
KV BW08-SG08 3P-0100-PNP	0301496	
KV BW08-SG08 3P-0200-PNP	0301497	●
Clip for plug / socket		
CLI-M8	0301463	
Connection cables		
KA BG08-L 3P-0300-PNP	0301622	●
KA BG08-L 3P-0500-PNP	0301623	
KA BW08-L 3P-0300-PNP	0301594	
KA BW08-L 3P-0500-PNP	0301502	
RSS radio sensor system		
RSS-T2	0377710	
Sensor distributor		
V2-M8	0301775	●
V4-M8	0301746	
V8-M8	0301751	

ⓘ Two sensors (closer/S) are required for each unit, plus extension cables as an option. Please note the minimum permitted bending radii for the sensor cables, which are generally 35 mm.

MMS PI1 programmable magnetic switches

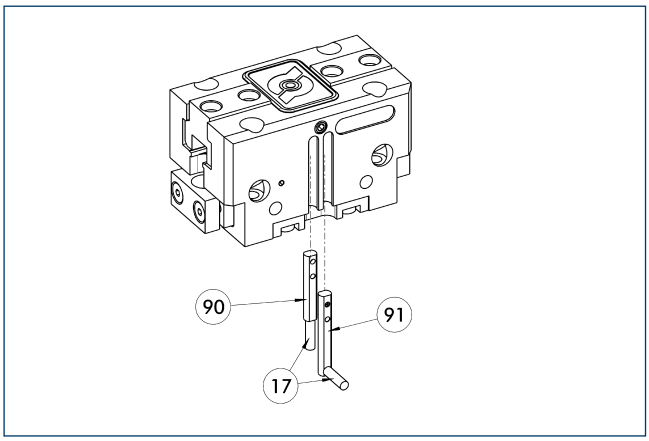

(17) Cable outlet
(91) MMS 22...-PI1-...-SA sensor
(90) MMS 22...-PI1-... sensor

Position query with one programmable position per sensor and electronics integrated in sensor. Programmable via MT magnet teaching tool (included in the scope of delivery) or ST plug teaching tool (optional). Limit position query mounted in C-groove. If the ST plug teaching tools are listed in the table, teaching can only take place with the ST plug teaching tools.

Description	ID	Often combined
MMS PI1 programmable magnetic switches		
MMS 22-PI1-S-M8-PNP	0301160	●
MMSK 22-PI1-S-PNP	0301162	
MMS PI1-HD programmable magnetic switches with stainless steel housing		
MMS 22-PI1-S-M8-PNP-HD	0301110	●
MMSK 22-PI1-S-PNP-HD	0301112	
MMS PI1 programmable magnetic switches with lateral cable outlet		
MMS 22-PI1-S-M8-PNP-SA	0301166	●
MMSK 22-PI1-S-PNP-SA	0301168	

ⓘ Two sensors (closer/S) are required for each unit, plus extension cables as an option. Please note the minimum permitted bending radii for the sensor cables, which are generally 35 mm. Connection cable, cable extensions, and sensor distributors can be found in the table for the MMS 22.

MMS PI2 programmable magnetic switches

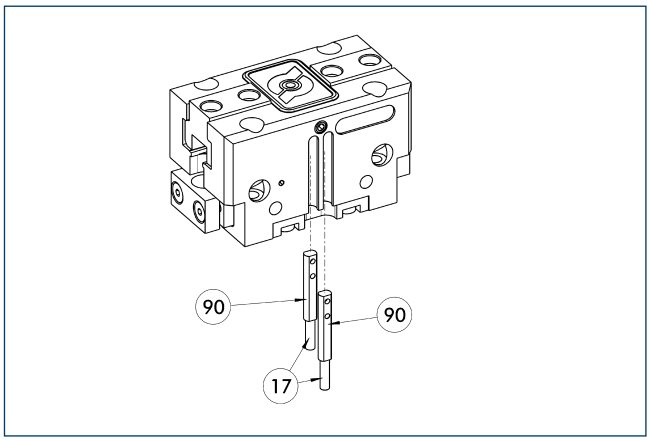

(17) Cable outlet
(90) MMS 22...-PI2-... sensor

Position query with two programmable positions per sensor and electronics integrated in sensor. Programmable via MT magnet teaching tool (included in the scope of delivery) or ST plug teaching tool (optional). Limit position query mounted in C-groove. If the ST plug teaching tools are listed in the table, teaching can only take place with the ST plug teaching tools.

Description	ID	Often combined
MMS PI2 programmable magnetic switches		
MMS 22-PI2-S-M8-PNP	0301180	●
MMSK 22-PI2-S-PNP	0301182	
MMS PI2-HD programmable magnetic switches with stainless steel housing		
MMS 22-PI2-S-M8-PNP-HD	0301130	●
MMSK 22-PI2-S-PNP-HD	0301132	

ⓘ Per unit one sensor (closer/S) is required, optionally a cable extension. Please note the minimum permitted bending radii for the sensor cables, which are generally 35 mm. Connection cable, cable extensions, and sensor distributors can be found in the table for the MMS-P 22.

MMS-P programmable magnetic switches

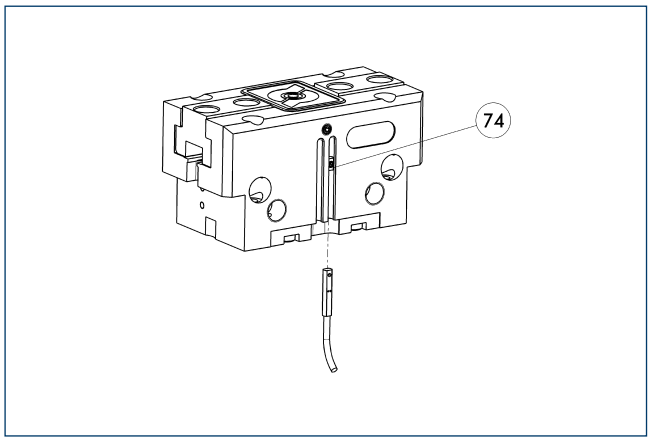

74 Stop for MMS-P

Position monitoring with two programmable positions per sensor. The end position monitoring is mounted in the C-slot.

Description	ID	Often combined
MMS-P programmable magnetic switches		
MMSK-P 22-S-PNP	0301371	
MMS-P 22-S-M8-PNP	0301370	●
Clip for plug / socket		
CLI-M8	0301463	
Connection cables		
KA BG08-L 4P-0500	0307767	●
KA BG08-L 4P-1000	0307768	
KA BW08-L 4P-0500	0307765	
KA BW08-L 4P-1000	0307766	
Sensor distributor		
V2-M8-4P-2XM8-3P	0301380	

ⓘ Per unit one sensor (closer/S) is required, optionally a cable extension. Please note the minimum permitted bending radii for the sensor cables, which are generally 35 mm.

APS-Z80 analog position sensor

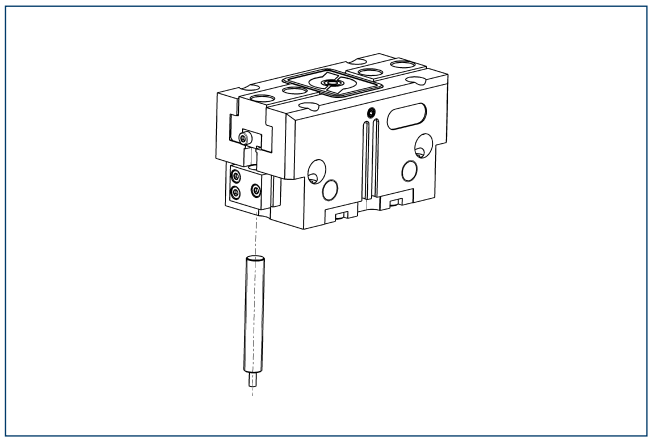

Contactlessly measuring, analog multi-position monitoring for any number of positions.

Description	ID	Often combined
Mounting kit for APS-Z80		
AS-APS-Z80-PGZN-plus 125-1	0302111	
AS-APS-Z80-PGZN-plus 125-2	0302112	
Sensor		
APS-Z80-K	0302072	
APS-Z80-M8	0302070	●

ⓘ When using an APS system, one mounting kit (AS-APS-Z80) and one APS-Z80 sensor is required per gripper.

APS-M1 analog position sensor

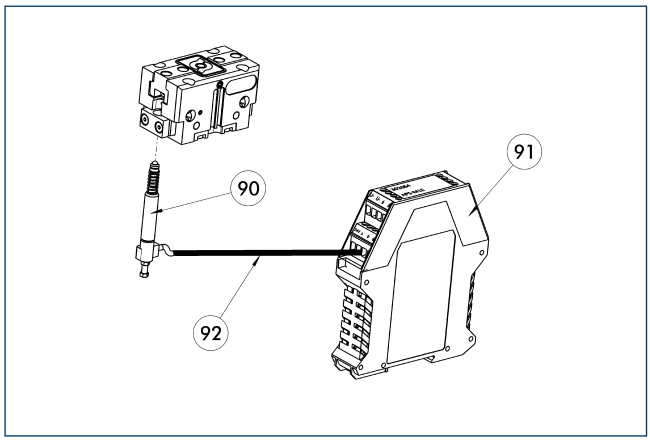

90 APS-M1S sensor
91 APS-M1E electronic processor
92 APS-K extension cable

Analog multi position monitoring for any desired positions.

Description	ID	Often combined
Mounting kit for APS-M1		
AS-APS-M1-PGZN-plus 125-1	0302081	
Connection cables		
APS-K0200	0302066	●
APS-K0700	0302068	
Electronic processor		
APS-M1E	0302064	
Sensor		
APS-M1S	0302062	

ⓘ When using an APS system, for each gripper a mounting kit (AS-APS-M1), an APS-M1S sensor (incl. 3 m cable) as well as an electronics (APS-M1e) are required. An extension cable (APS-K) can be connected between the sensor and the electronics as an option. The max. cable length between the sensor and the electronics is 10 m, between the electronics and their control unit (PLC) it is max. 1 m.

Cylindrical reed switches

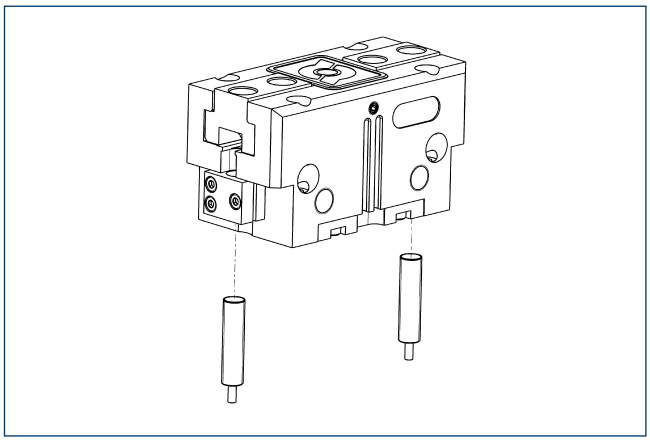

Limit position monitor can be mounted with mounting kit.

Description	ID	
Mounting kit for proximity switch		
AS-RMS 80 PGN/PZN-plus 100/125	0377726	
Reed switches		
RMS 80-S-M8	0377721	

ⓘ Two sensors (closer/S) are required for each unit, plus extension cables as an option. This mounting kit needs to be ordered optionally as an accessory. Two mounting kits are required per gripper. Please note the minimum permitted bending radii for the sensor cables, which are generally 35 mm.

JGP 160

SCHUNK Grippers pneumatic | 2-Finger Parallel Grippers | Universal Gripper

Gripping force, O.D. gripping

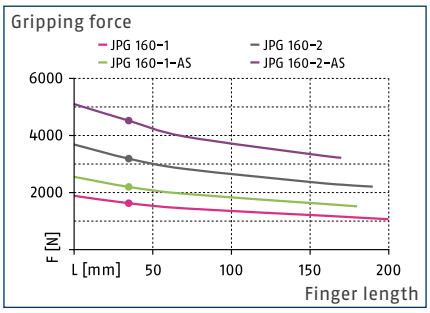

Gripping force, I.D. gripping

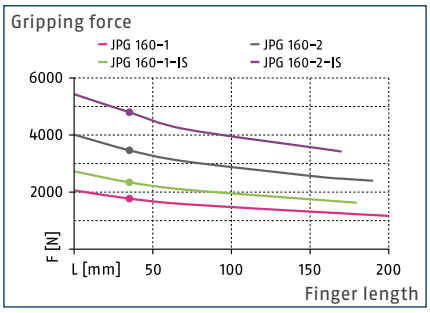

Finger load

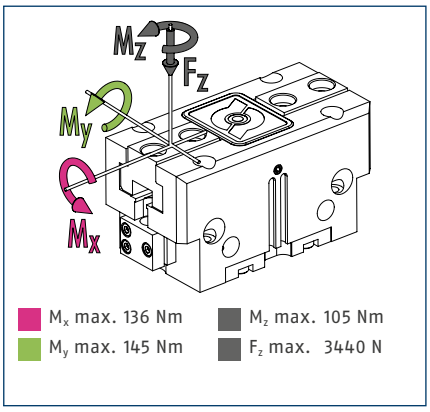

ⓘ The indicated moments and forces are static values, apply per base jaw and may occur simultaneously. M_y may arise in addition to the moment generated by the gripping force itself. If the max. permitted finger weight is exceeded, it is impreative to throttle the air supply so that the jaw movement occurs without any hitting or bouncing. Service life may be reduced.

Technical data

Description		JGP 160-1	JGP 160-2	JGP 160-1-AS	JGP 160-2-AS	JGP 160-1-IS	JGP 160-2-IS
ID		0308660	0308665	0308661	0308666	0308662	0308667
Stroke per jaw	[mm]	16	8	16	8	16	8
Closing- / opening force	[N]	1640/1770	3200/3460	2210/-	4420/-	-/2340	-/4680
min. spring force	[N]			570	1220	570	1220
Weight	[kg]	2.6	2.6	3.3	3.3	3.3	3.6
Recommended workpiece weight	[kg]	8.2	16	8.2	16	8.2	16
Fluid consumption per double stroke	[cm³]	164	164	210	210	265	265
min. / max. operating pressure	[bar]	2.5/8	2.5/8	4/6.5	4/6.5	4/6.5	4/6.5
Nominal operating pressure	[bar]	6	6	6	6	6	6
Closing- / opening time	[s]	0.15/0.15	0.15/0.15	0.12/0.25	0.12/0.25	0.25/0.12	0.25/0.12
Closing- / opening time only with spring	[s]			0.45	0.45	0.45	0.45
max. permitted finger length	[mm]	200	190	180	170	180	170
max. permitted weight per finger	[kg]	3.5	3.5	3.5	3.5	3.5	3.5
IP class		40	40	40	40	40	40
min. / max. ambient temperature	[°C]	5/90	5/90	5/90	5/90	5/90	5/90
Repeat accuracy	[mm]	0.01	0.01	0.01	0.01	0.01	0.01

Main view

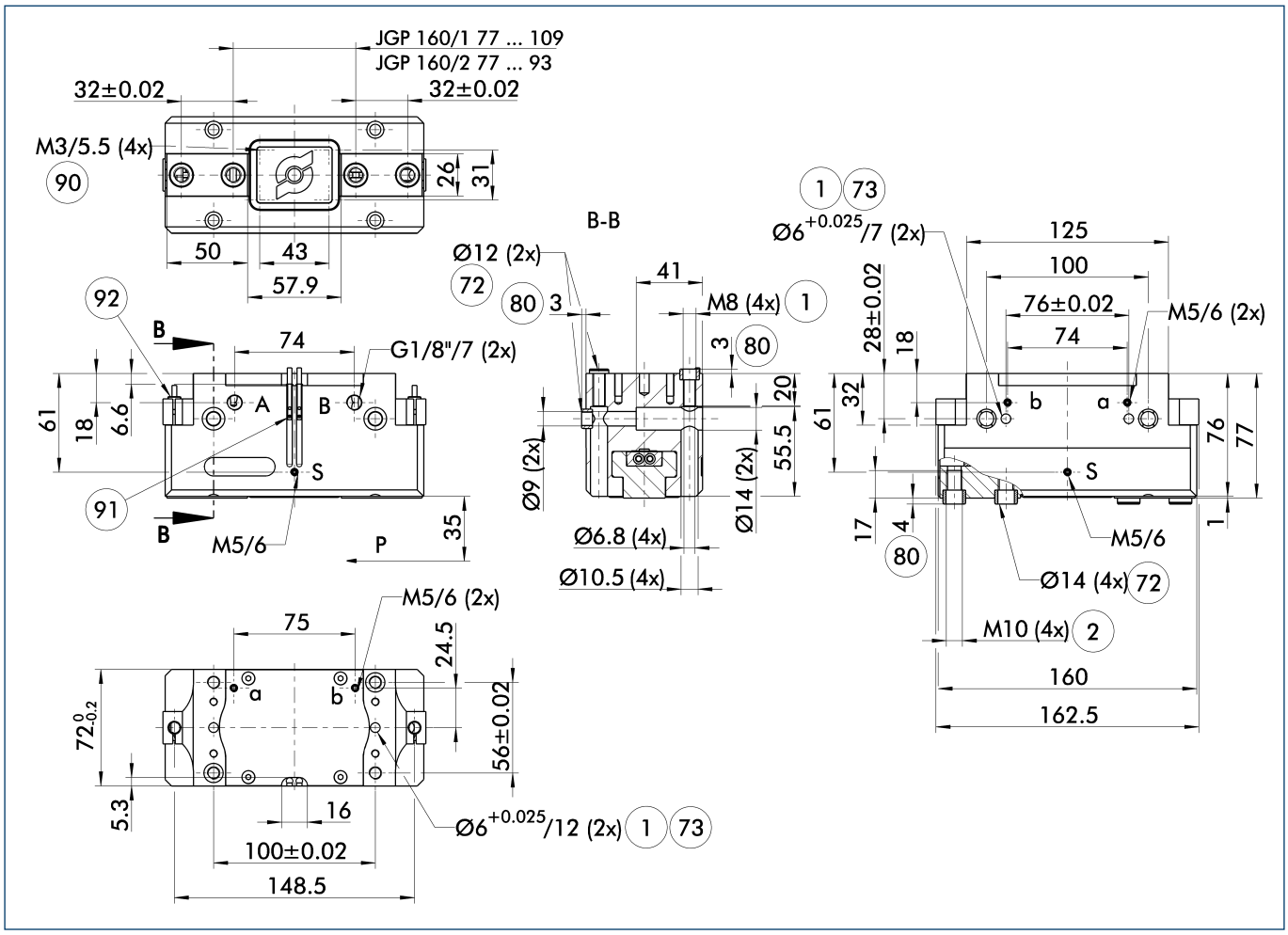

The drawing shows the gripper in the basic version with closed jaws, without dimensional consideration of the options described below.

ⓘ The SDV-P pressure maintenance valve can also be used for I.D. or O.D. gripping alternatively or in addition to the spring-loaded, mechanical gripping force maintenance device (see catalog section on "Accessories").

A, a Main / direct connection, gripper opening

B, b Main / direct connection, gripper closing

S Air purge connection (0.5 ... 1 bar)

(1) Gripper connection

(2) Finger connection

(72) Fit for centering sleeves

(73) Fit for centering pins

(80) Depth of the centering sleeve hole in the mating part

(90) Thread below the cover for fastening external attachments

(91) MMS 22... sensor

(92) IN ... sensor

Maximum permitted finger projection

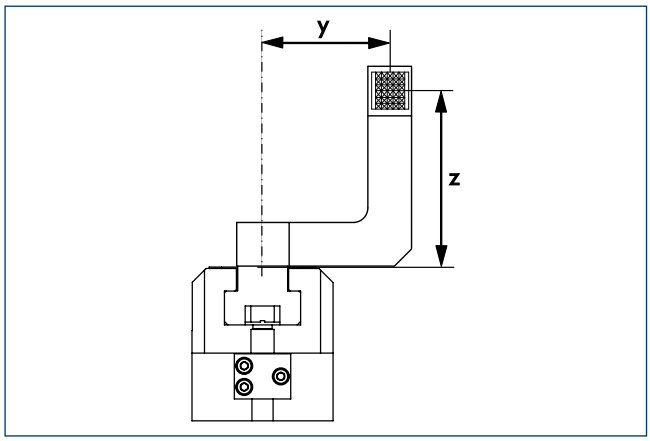

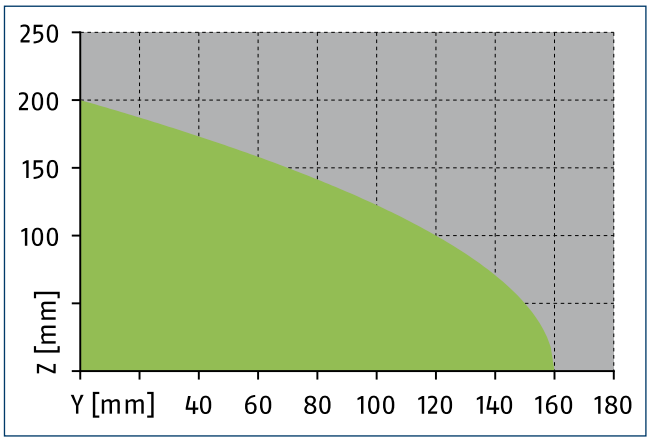

Permitted range Inadmissible range

The curve applies for the base version (Stroke -1). For other versions, the curve must be offset in parallel corresponding to the max. permissible finger length.

Hose-free direct connection M5

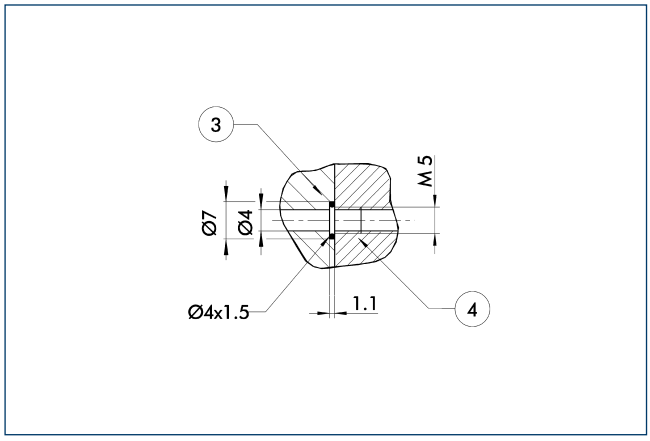

(3) Adapter (4) Gripper

The direct connection is used for supplying compressed air without hoses. Instead, the pressure medium is fed through bore-holes in the mounting plate.

Gripping force maintenance device AS / IS

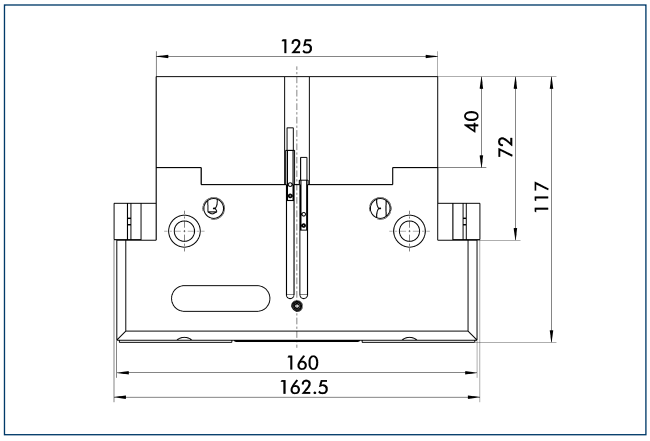

The mechanical maintenance of gripping force also assures a minimum gripping force in the case of a loss of pressure. With the AS / S variant, this acts as a closing force, and as an opening force for the IS variant. The maintenance of gripping force element can also be used as a means for increasing gripping force or for single actuated gripping.

SDV-P pressure maintenance valve

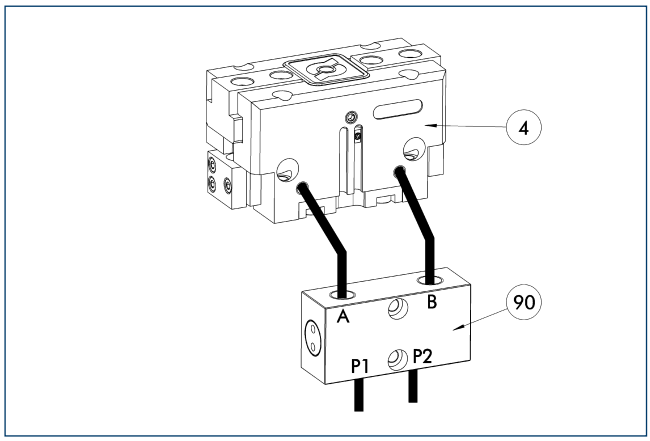

(4) Gripper

(90) SDV-P pressure maintenance valve

The SDV-P pressure maintenance valves ensure that the pressure in the piston chamber of pneumatic gripping, rotary, linear, and quick-change modules is maintained temporarily during an emergency stop.

Description	ID	
Pressure maintenance valve		
SDV-P 04	0403130	

BSWS jaw quick-change systems

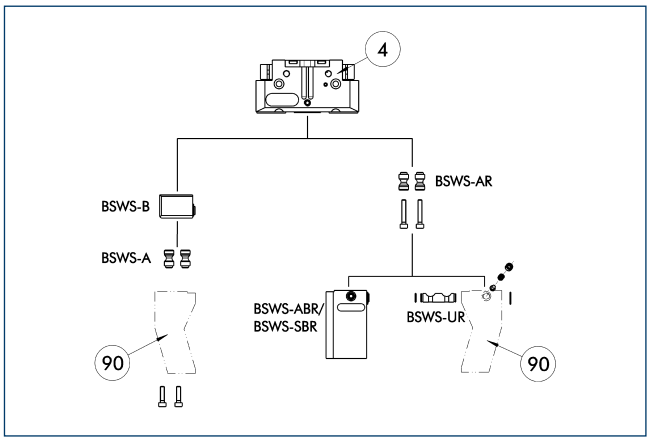

(4) Gripper

(90) Customized gripper fingers

There are various jaw quick-change systems available for the grippers. For detailed information, refer to the appropriate product.

Description	ID	
Jaw quick-change system adapter		
BSWS-AR 160	0300096	
BSWS-A 160	0303030	
Jaw quick-change system base		
BSWS-B 160	0303031	
Finger blanks with jaw quick-change system		
BSWS-ABR-PGZN-plus 160	0300076	
BSWS-SBR-PGZN-plus 160	0300086	
Jaw quick-change system reversed		
BSWS-UR 160	0302995	

ⓘ Only the systems listed in the table can be used.

ZBA L-plus 160 intermediate jaws

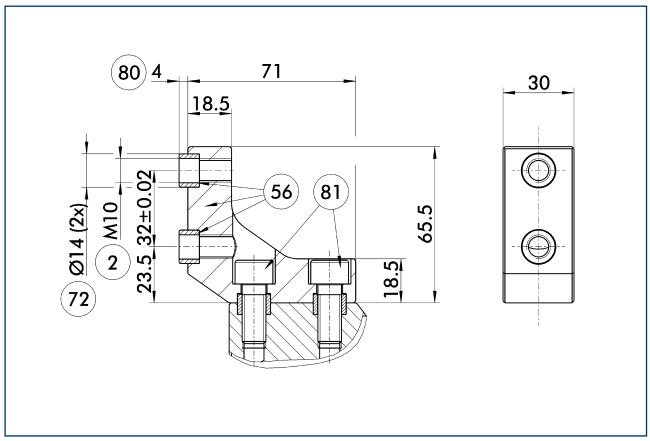

- (2) Finger connection
- (56) Included in delivery
- (72) Fit for centering sleeves
- (80) Depth of the centering sleeve hole in the mating part
- (81) Not included in the scope of delivery

Optionally intermediate jaws can be used, enabling direct connection and alignment of top jaws and various standard accessories in Z-direction.

Description	ID	Material	Scope of delivery
Intermediate jaws			
ZBA-L-plus 160	0311762	Aluminum	1

UZB 160 universal intermediate jaw

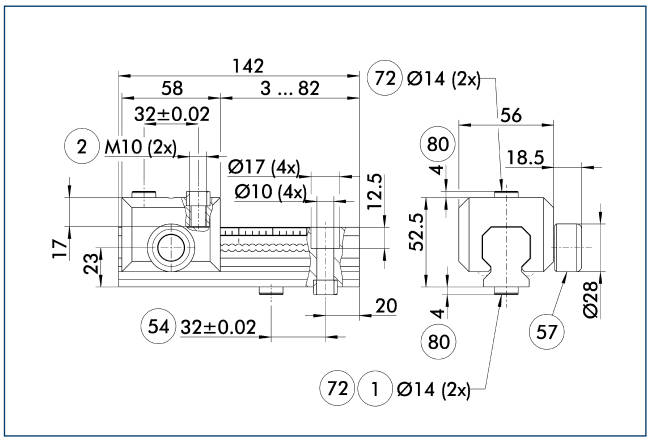

- (1) Gripper connection
- (2) Finger connection
- (54) Optional right or left connection
- (57) Locking
- (72) Fit for centering sleeves
- (80) Depth of the centering sleeve hole in the mating part

The universal intermediate jaw allows fast tool-free and reliable plugging and shifting of top jaws at the gripper.

Description	ID	Grid dimension [mm]
Universal intermediate jaw		
UZB 160	0300046	4
UZB-S 160	5518274	4
Finger blanks		
ABR-PGZN-plus 160	0300014	
SBR-PGZN-plus 160	0300024	

FMS-ZBA / ZBP 160 force-measuring jaws

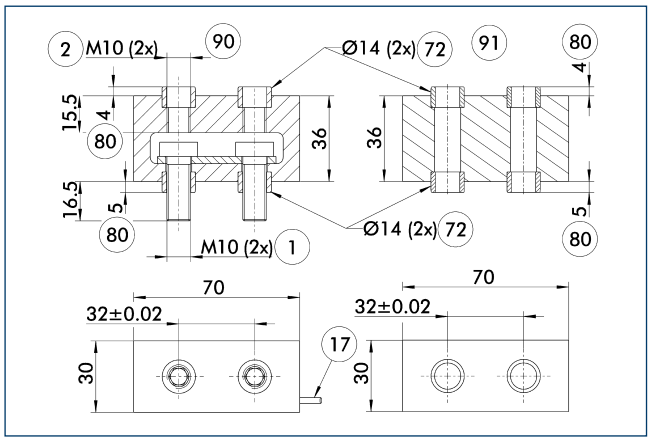

1 Gripper connection
2 Finger connection
17 Cable outlet
72 Fit for centering sleeves
80 Depth of the centering sleeve hole in the mating part
90 Active intermediate jaws
91 Passive intermediate jaws

Force measuring jaws measure gripping forces, but can also determine workpiece weights or dimensional deviations. There are active and passive intermediate jaws (FMS-ZBA or FMS-ZBP). At least one active force measuring jaw is required per gripper, the rest can be passive. For each active jaw, a FMS-A control unit and a FMS-AK connection cable are required.

Description	ID	Often combined
Active intermediate jaws		
FMS-ZBA 160	0301840	
Passive intermediate jaws		
FMS-ZBP 160	0301841	
Connection cables		
FMS-AK0200	0301820	●
FMS-AK0500	0301821	
FMS-AK1000	0301822	
FMS-AK2000	0301823	
Electronic processor		
FMS-A2	0301811	

ABR- / SBR-PGZN-plus 160 finger blanks

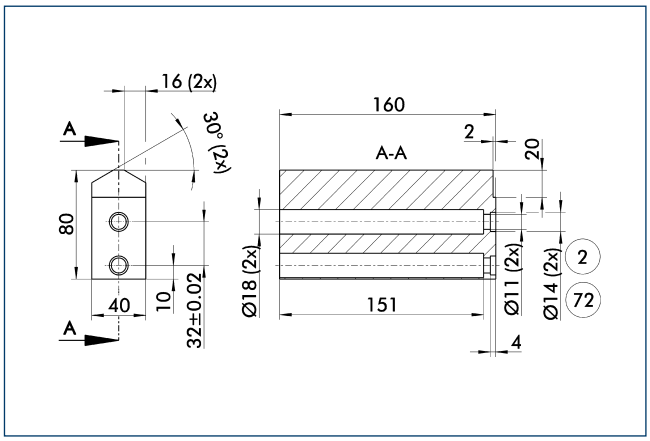

2 Finger connection
72 Fit for centering sleeves

Finger blanks for customized subsequent machining.

Description	ID	Material	Scope of delivery
Finger blanks			
ABR-PGZN-plus 160	0300014	Aluminum	1
SBR-PGZN-plus 160	0300024	16MnCr5	1

Attachment valves

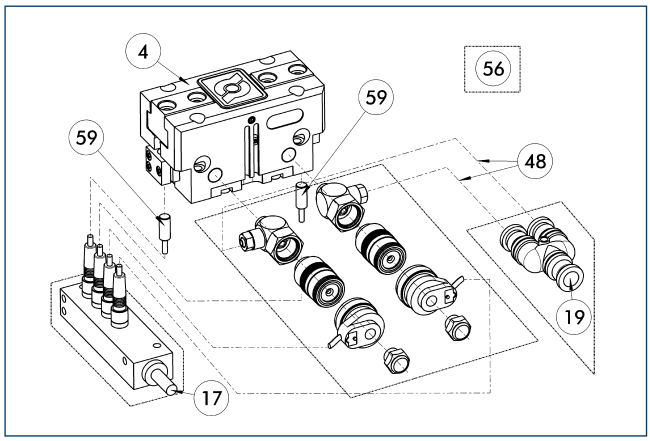

(4) Gripper
(17) Cable outlet
(19) Air connection
(48) Hose
(56) Included in delivery
(59) Monitoring gripping

For each unit one attachment valve ABV is required, optional with distributor for sensors and valves. Attachment valves increase the efficiency, reduce the installation work and air consumption and simplify air supply. For details please refer to the "Accessories" catalog section.

Description	ID	Often combined
Attachment valves		
ABV-MV30-G1/8	0303328	
ABV-MV30-G1/8-V2-M8	0303396	
ABV-MV30-G1/8-V4-M8	0303366	●
ABV-MV30-G1/8-V8-M8	0303367	

Inductive proximity switches

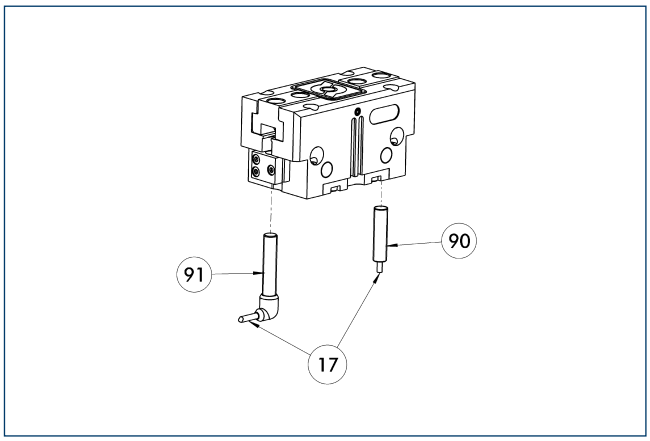

(17) Cable outlet
(90) IN ... sensor
(91) IN ...-SA sensor

Directly mounted limit position monitor.

Description	ID	Often combined
Inductive proximity switches		
IN 80-S-M12	0301578	
IN 80-S-M8	0301478	●
INK 80-S	0301550	
Inductive proximity switches with lateral outlet		
IN 80-S-M12-SA	0301587	
IN 80-S-M8-SA	0301483	●
INK 80-S-SA	0301566	
Cable extensions		
KV BG12-SG12 3P-0030-PNP	0301999	
KV BG12-SG12 3P-0060-PNP	0301998	
KV BW08-SG08 3P-0030-PNP	0301495	
KV BW08-SG08 3P-0100-PNP	0301496	
KV BW08-SG08 3P-0200-PNP	0301497	●
KV BW12-SG12 3P-0030-PNP	0301595	
KV BW12-SG12 3P-0100-PNP	0301596	
KV BW12-SG12 3P-0200-PNP	0301597	
Clip for plug / socket		
CLI-M12	0301464	
CLI-M8	0301463	
Connection cables		
KA BG08-L 3P-0300-PNP	0301622	●
KA BG08-L 3P-0500-PNP	0301623	
KA BG12-L 3P-0500-PNP	30016369	
KA BW08-L 3P-0300-PNP	0301594	
KA BW08-L 3P-0500-PNP	0301502	
KA BW12-L 3P-0300-PNP	0301503	
KA BW12-L 3P-0500-PNP	0301507	
Sensor distributor		
V2-M8	0301775	●
V2-M12	0301776	●
V4-M12	0301747	
V4-M8	0301746	

ⓘ Two sensors (closer/S) are required for each unit, plus extension cables as an option. Please note the minimum permitted bending radii for the sensor cables, which are generally 35 mm.

Flexible position sensor

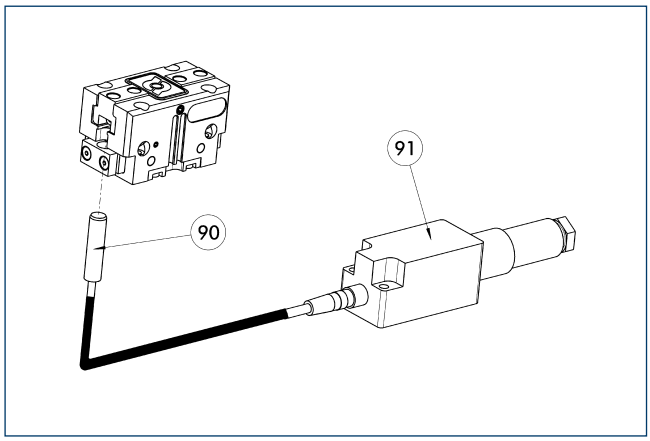

90 FPS-S sensor
91 FPS-F5 / -F5 T electronic processor

Flexible position monitoring of up to five positions.

Description	ID	Often combined
Mounting kit for FPS		
AS-FPS-PGZN-plus 160-1	0301638	
AS-FPS-PGZN-plus 160-2	0301639	
Electronic processor		
FPS-F5	0301805	●
FPS-F5 T	0301807	
Sensor		
FPS-S M8	0301704	
Clip for plug / socket		
CLI-M8	0301463	

ⓘ When using a FPS system, a FPS sensor (FPS-S) and a control unit (FPS-F5 / F5 T) are required for each gripper as well as a mounting kit (AS), if listed. Cable extensions (KV) are available as options in the "Accessories" catalog section.

MMS electronic magnetic switches

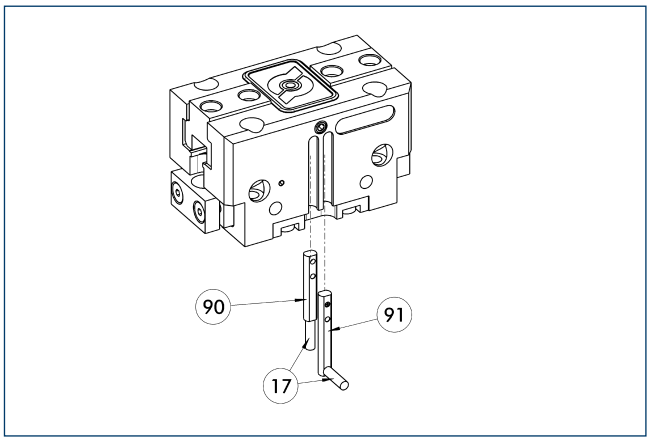

17 Cable outlet
90 MMS 22... sensor
91 MMS 22...-SA sensor

End position monitoring for mounting in the C-slot.

Description	ID	Often combined
MMS electronic magnetic switches		
MMS 22-S-M8-PNP	0301032	●
MMSK 22-S-PNP	0301034	
MMS electronic magnetic switches with lateral cable outlet		
MMS 22-S-M8-PNP-SA	0301042	●
MMSK 22-S-PNP-SA	0301044	
Reed switches		
RMS 22-S-M8	0377720	●
Cable extensions		
KV BW08-SG08 3P-0030-PNP	0301495	
KV BW08-SG08 3P-0100-PNP	0301496	
KV BW08-SG08 3P-0200-PNP	0301497	●
Clip for plug / socket		
CLI-M8	0301463	
Connection cables		
KA BG08-L 3P-0300-PNP	0301622	●
KA BG08-L 3P-0500-PNP	0301623	
KA BW08-L 3P-0300-PNP	0301594	
KA BW08-L 3P-0500-PNP	0301502	
RSS radio sensor system		
RSS-T2	0377710	
Sensor distributor		
V2-M8	0301775	●
V4-M8	0301746	
V8-M8	0301751	

ⓘ Two sensors (closer/S) are required for each unit, plus extension cables as an option. Please note the minimum permitted bending radii for the sensor cables, which are generally 35 mm.

MMS PI1 programmable magnetic switches

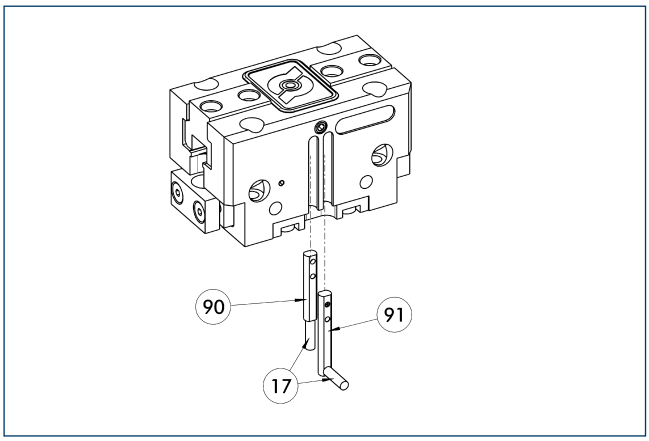

(17) Cable outlet
(91) MMS 22...-PI1-...-SA sensor
(90) MMS 22 sensor PI1-...

Position query with one programmable position per sensor and electronics integrated in sensor. Programmable via MT magnet teaching tool (included in the scope of delivery) or ST plug teaching tool (optional). Limit position query mounted in C-groove. If the ST plug teaching tools are listed in the table, teaching can only take place with the ST plug teaching tools.

Description	ID	Often combined
MMS PI1 programmable magnetic switches		
MMS 22-PI1-S-M8-PNP	0301160	●
MMSK 22-PI1-S-PNP	0301162	
MMS PI1-HD programmable magnetic switches with stainless steel housing		
MMS 22-PI1-S-M8-PNP-HD	0301110	●
MMSK 22-PI1-S-PNP-HD	0301112	
MMS PI1 programmable magnetic switches with lateral cable outlet		
MMS 22-PI1-S-M8-PNP-SA	0301166	●
MMSK 22-PI1-S-PNP-SA	0301168	

ⓘ Two sensors (closer/S) are required for each unit, plus extension cables as an option. Please note the minimum permitted bending radii for the sensor cables, which are generally 35 mm. Connection cable, cable extensions, and sensor distributors can be found in the table for the MMS 22.

MMS PI2 programmable magnetic switches

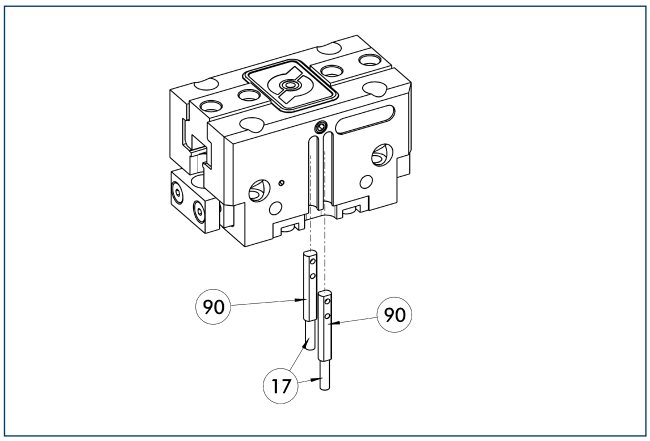

(17) Cable outlet
(90) MMS 22...-PI2-... sensor

Position query with two programmable positions per sensor and electronics integrated in sensor. Programmable via MT magnet teaching tool (included in the scope of delivery) or ST plug teaching tool (optional). Limit position query mounted in C-groove. If the ST plug teaching tools are listed in the table, teaching can only take place with the ST plug teaching tools.

Description	ID	Often combined
MMS PI2 programmable magnetic switches		
MMS 22-PI2-S-M8-PNP	0301180	●
MMSK 22-PI2-S-PNP	0301182	
MMS PI2-HD programmable magnetic switches with stainless steel housing		
MMS 22-PI2-S-M8-PNP-HD	0301130	●
MMSK 22-PI2-S-PNP-HD	0301132	

ⓘ Per unit one sensor (closer/S) is required, optionally a cable extension. Please note the minimum permitted bending radii for the sensor cables, which are generally 35 mm. Connection cable, cable extensions, and sensor distributors can be found in the table for the MMS-P 22.

MMS-P programmable magnetic switches

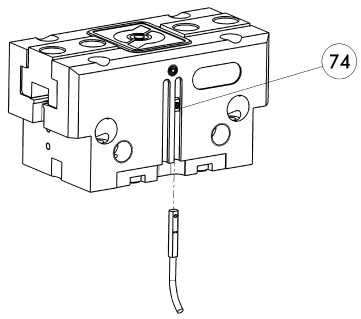

74 Stop for MMS-P

Position monitoring with two programmable positions per sensor. The end position monitoring is mounted in the C-slot.

Description	ID	Often combined
MMS-P programmable magnetic switches		
MMSK-P 22-S-PNP	0301371	
MMS-P 22-S-M8-PNP	0301370	●
Clip for plug / socket		
CLI-M8	0301463	
Connection cables		
KA BG08-L 4P-0500	0307767	●
KA BG08-L 4P-1000	0307768	
KA BW08-L 4P-0500	0307765	
KA BW08-L 4P-1000	0307766	
Sensor distributor		
V2-M8-4P-2XM8-3P	0301380	

ⓘ Per unit one sensor (closer/S) is required, optionally a cable extension. Please note the minimum permitted bending radii for the sensor cables, which are generally 35 mm.

APS-Z80 analog position sensor

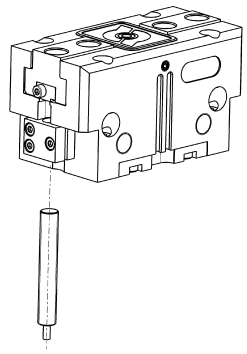

Contactlessly measuring, analog multi-position monitoring for any number of positions.

Description	ID	Often combined
Mounting kit for APS-Z80		
AS-APS-Z80-PGZN-plus 160-1/200-2/240-2	0302113	
AS-APS-Z80-PGZN-plus 160-2	0302114	
Sensor		
APS-Z80-K	0302072	
APS-Z80-M8	0302070	●

ⓘ When using an APS system, one mounting kit (AS-APS-Z80) and one APS-Z80 sensor is required per gripper.

APS-M1 analog position sensor

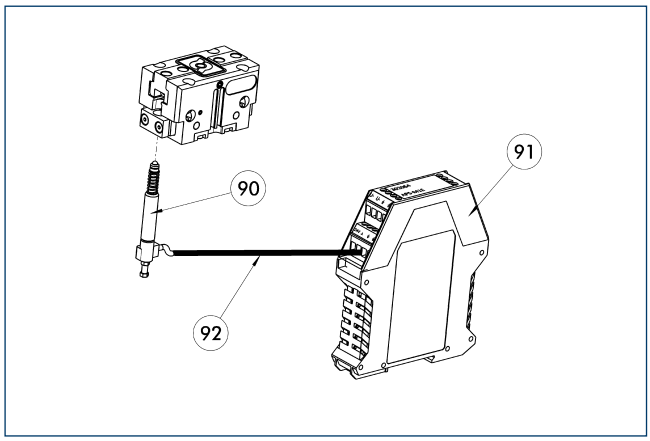

(90) APS-M1S sensor
(91) APS-M1E electronic processor
(92) APS-K extension cable

Analog multi position monitoring for any desired positions.

Description	ID	Often combined
Mounting kit for APS-M1		
AS-APS-M1-PGZN-plus 160-1/240-2	0302083	
AS-APS-M1-PGZN-plus 160-2	0302084	
Connection cables		
APS-K0200	0302066	●
APS-K0700	0302068	
Electronic processor		
APS-M1E	0302064	
Sensor		
APS-M1S	0302062	

ⓘ When using an APS system, for each gripper a mounting kit (AS-APS-M1), an APS-M1S sensor (incl. 3 m cable) as well as an electronics (APS-M1e) are required. An extension cable (APS-K) can be connected between the sensor and the electronics as an option. The max. cable length between the sensor and the electronics is 10 m, between the electronics and their control unit (PLC) it is max. 1 m.

Cylindrical reed switches

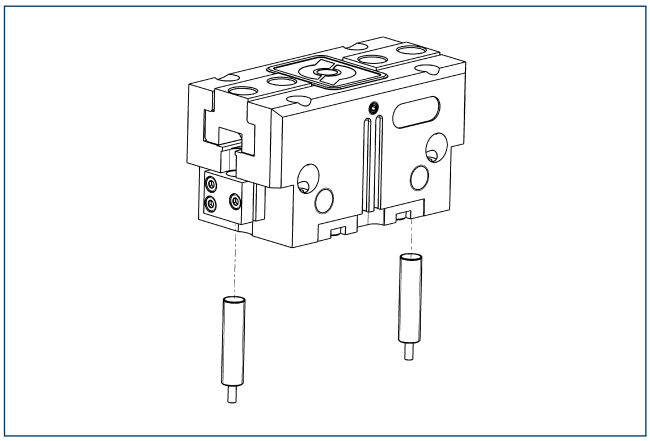

Limit position monitor can be mounted with mounting kit.

Description	ID	
Mounting kit for proximity switch		
AS-RMS 80 PGN/PZN-plus 160-380	0377727	
Reed switches		
RMS 80-S-M8	0377721	

ⓘ Two sensors (closer/S) are required for each unit, plus extension cables as an option. This mounting kit needs to be ordered optionally as an accessory. Two mounting kits are required per gripper. Please note the minimum permitted bending radii for the sensor cables, which are generally 35 mm.

JGP 200

SCHUNK Grippers pneumatic | 2-Finger Parallel Grippers | Universal Gripper

Gripping force, O.D. gripping

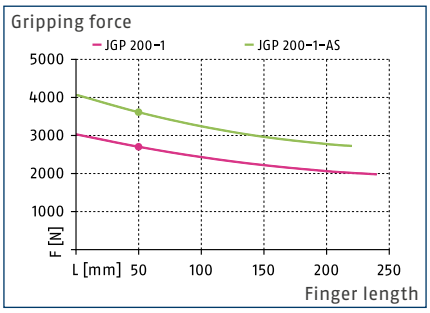

Gripping force, I.D. gripping

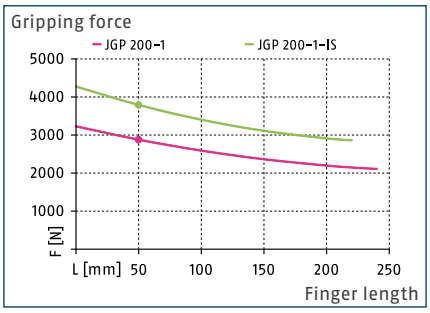

Finger load

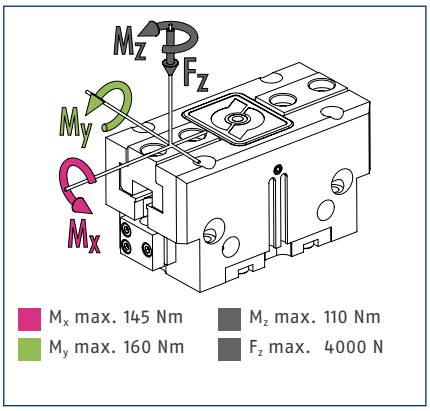

ⓘ The indicated moments and forces are static values, apply per base jaw and may occur simultaneously. M_y may arise in addition to the moment generated by the gripping force itself. If the max. permitted finger weight is exceeded, it is impreative to throttle the air supply so that the jaw movement occurs without any hitting or bouncing. Service life may be reduced.

Technical data

Description		JGP 200-1	JGP 200-1-AS	JGP 200-1-IS
ID		0308670	0308671	0308672
Stroke per jaw	[mm]	25	25	25
Closing- / opening force	[N]	2700/2870	3610/-	-/3780
min. spring force	[N]		910	910
Weight	[kg]	5.2	7	7
Recommended workpiece weight	[kg]	13.5	13.5	13.5
Fluid consumption per double stroke	[cm³]	385	495	620
min. / max. operating pressure	[bar]	2.5/8	4/6.5	4/6.5
Nominal operating pressure	[bar]	6	6	6
Closing- / opening time	[s]	0.35/0.35	0.3/0.6	0.6/0.3
Closing- / opening time only with spring	[s]		0.50	0.50
max. permitted finger length	[mm]	240	220	220
max. permitted weight per finger	[kg]	6.5	6.5	6.5
IP class		40	40	40
min. / max. ambient temperature	[°C]	5/90	5/90	5/90
Repeat accuracy	[mm]	0.02	0.02	0.02

Main view

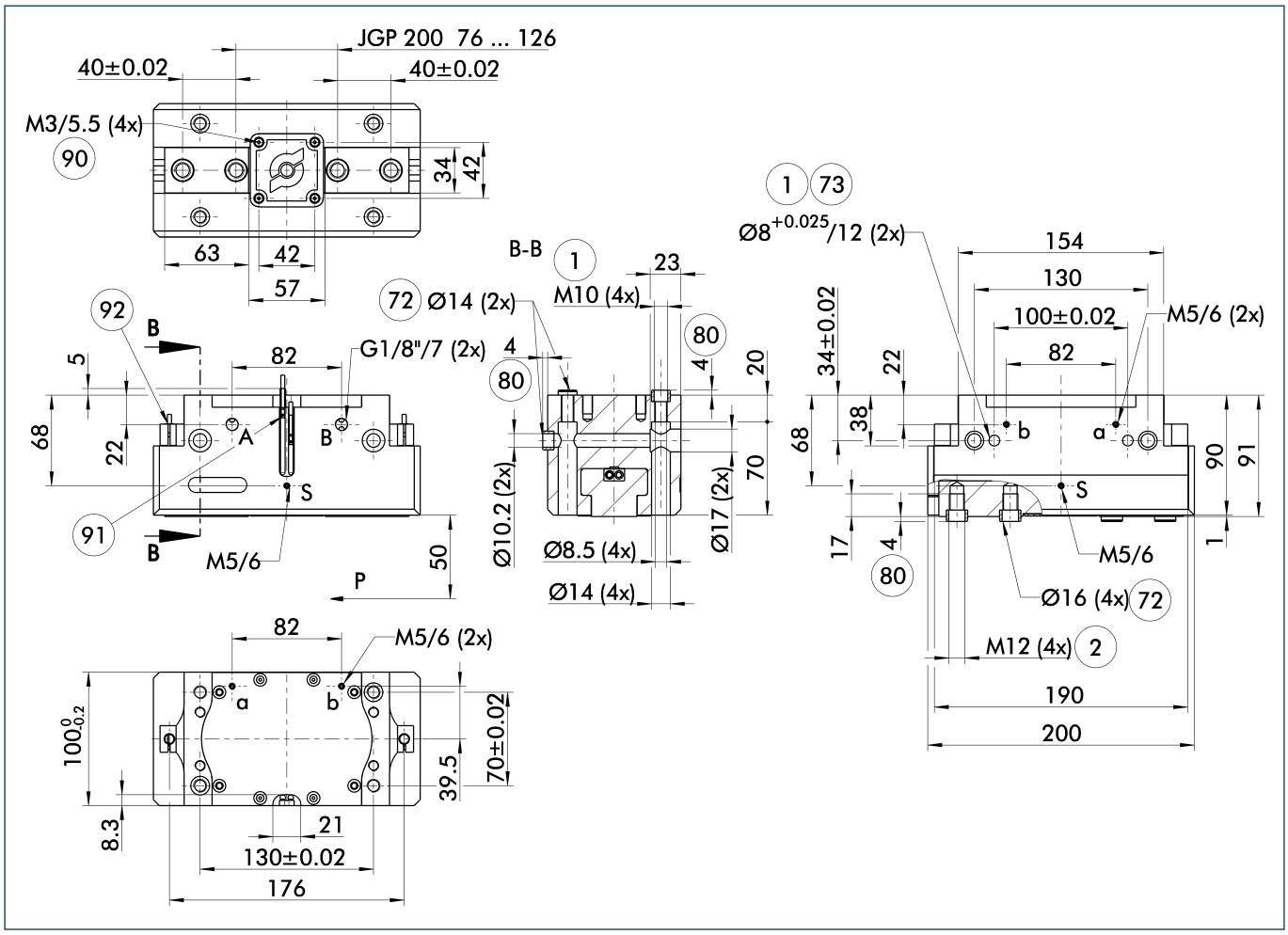

The drawing shows the gripper in the basic version with closed jaws, without dimensional consideration of the options described below.

ⓘ The SDV-P pressure maintenance valve can also be used for I.D. or O.D. gripping alternatively or in addition to the spring-loaded, mechanical gripping force maintenance device (see catalog section on "Accessories").

A, a Main / direct connection, gripper opening

B, b Main / direct connection, gripper closing

S Air purge connection (0.5 ... 1 bar)

(1) Gripper connection

(2) Finger connection

(72) Fit for centering sleeves

(73) Fit for centering pins

(80) Depth of the centering sleeve hole in the mating part

(90) Thread below the cover for fastening external attachments

(91) MMS 22... sensor

(92) IN ... sensor

Maximum permitted finger projection

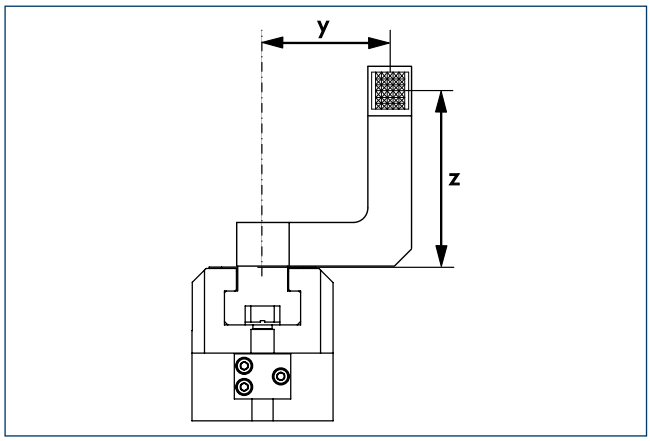

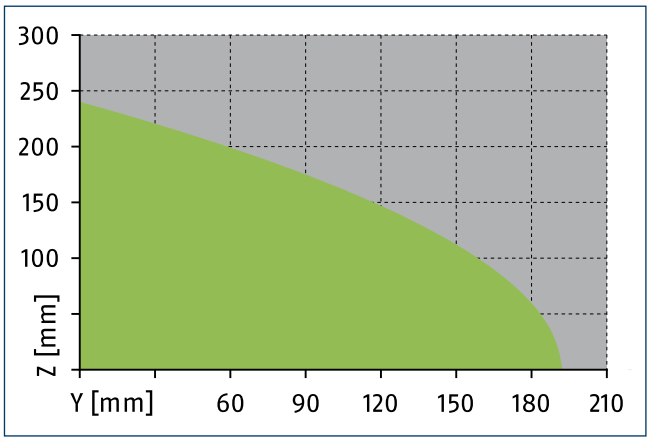

Permitted range Inadmissible range

The curve applies for the base version (Stroke -1). For other versions, the curve must be offset in parallel corresponding to the max. permissible finger length.

Hose-free direct connection M5

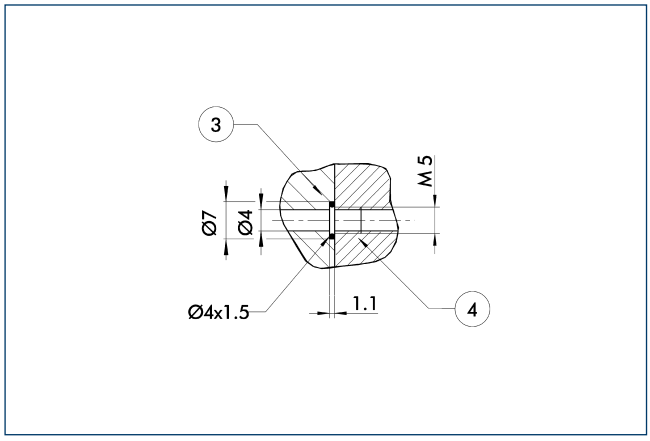

3 Adapter 4 Gripper

The direct connection is used for supplying compressed air without hoses. Instead, the pressure medium is fed through bore-holes in the mounting plate.

Gripping force maintenance device AS / IS

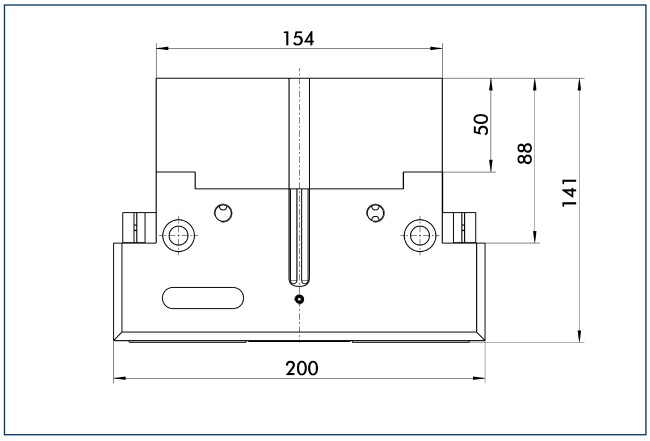

The mechanical maintenance of gripping force also assures a minimum gripping force in the case of a loss of pressure. With the AS / S variant, this acts as a closing force, and as an opening force for the IS variant. The maintenance of gripping force element can also be used as a means for increasing gripping force or for single actuated gripping.

SDV-P pressure maintenance valve

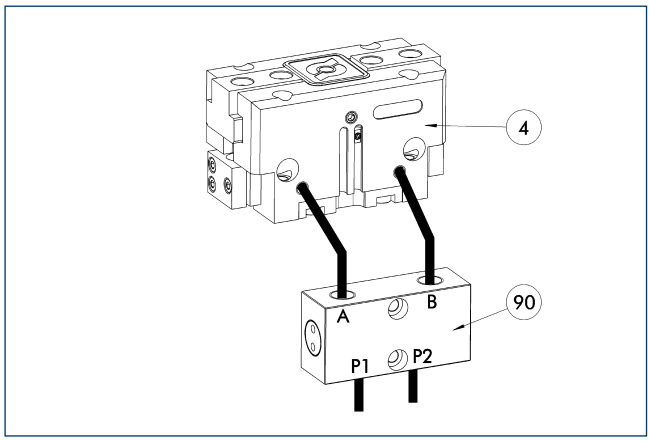

(4) Gripper
(90) SDV-P pressure maintenance valve

The SDV-P pressure maintenance valves ensure that the pressure in the piston chamber of pneumatic gripping, rotary, linear, and quick-change modules is maintained temporarily during an emergency stop.

Description	ID	
Pressure maintenance valve		
SDV-P 04	0403130	

BSWS jaw quick-change systems

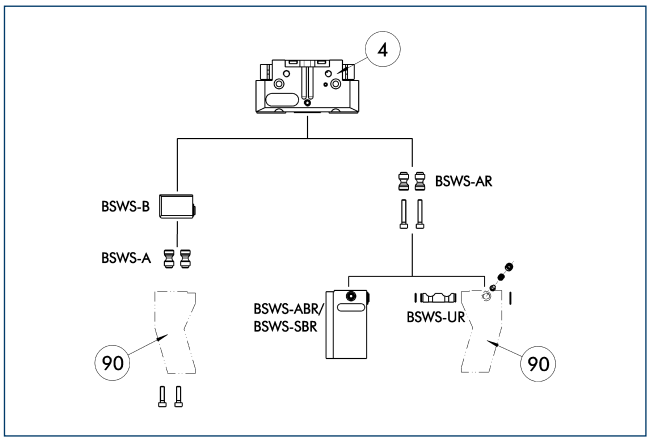

(4) Gripper
(90) Customized gripper fingers

There are various jaw quick-change systems available for the grippers. For detailed information, refer to the appropriate product.

Description	ID	
Jaw quick-change system base		
BSWS-B 200	0303033	
Jaw quick-change system adapter		
BSWS-A 200	0303032	

ⓘ Only the systems listed in the table can be used.

ZBA L-plus 200 intermediate jaws

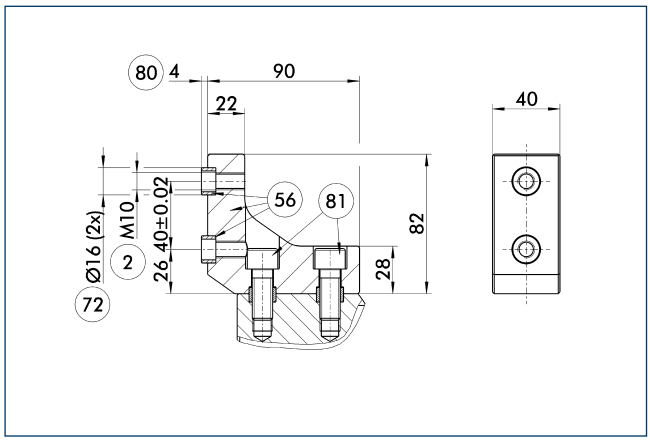

(2) Finger connection
(56) Included in delivery
(72) Fit for centering sleeves
(80) Depth of the centering sleeve hole in the mating part
(81) Not included in the scope of delivery

Optionally intermediate jaws can be used, enabling direct connection and alignment of top jaws and various standard accessories in Z-direction.

Description	ID	Material	Scope of delivery
Intermediate jaws			
ZBA-L-plus 200	0311772	Aluminum	1

UZB 200 universal intermediate jaw

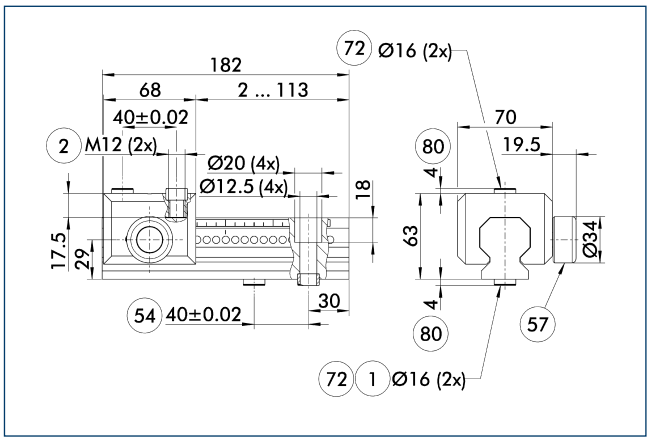

(1) Gripper connection
(2) Finger connection
(54) Optional right or left connection
(57) Locking
(72) Fit for centering sleeves
(80) Depth of the centering sleeve hole in the mating part

The universal intermediate jaw allows fast tool-free and reliable plugging and shifting of top jaws at the gripper.

Description	ID	Grid dimension [mm]
Universal intermediate jaw		
UZB 200	0300047	7
UZB-S 200	5518275	7
Finger blanks		
ABR-PGZN-plus 200	0300015	
SBR-PGZN-plus 200	0300025	

FMS-ZBA / ZBP 200 force-measuring jaws

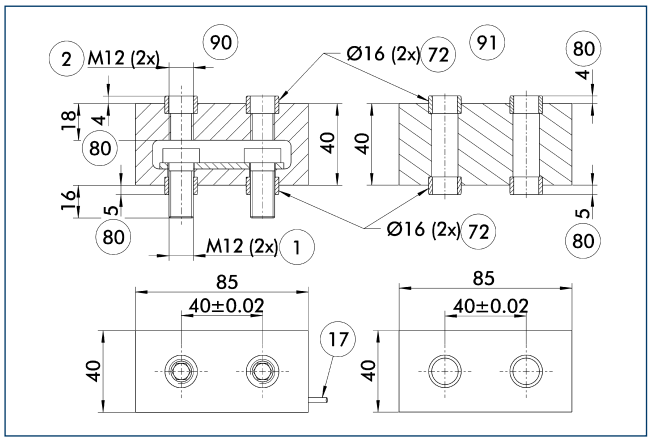

1 Gripper connection
2 Finger connection
17 Cable outlet
72 Fit for centering sleeves
80 Depth of the centering sleeve hole in the mating part
90 Active intermediate jaws
91 Passive intermediate jaws

Force measuring jaws measure gripping forces, but can also determine workpiece weights or dimensional deviations. There are active and passive intermediate jaws (FMS-ZBA or FMS-ZBP). At least one active force measuring jaw is required per gripper, the rest can be passive. For each active jaw, a FMS-A control unit and a FMS-AK connection cable are required.

Description	ID	Often combined
Active intermediate jaws		
FMS-ZBA 200	0301842	
Passive intermediate jaws		
FMS-ZBP 200	0301843	
Connection cables		
FMS-AK0200	0301820	●
FMS-AK0500	0301821	
FMS-AK1000	0301822	
FMS-AK2000	0301823	
Electronic processor		
FMS-A2	0301811	

ABR- / SBR-PGZN-plus 200 finger blanks

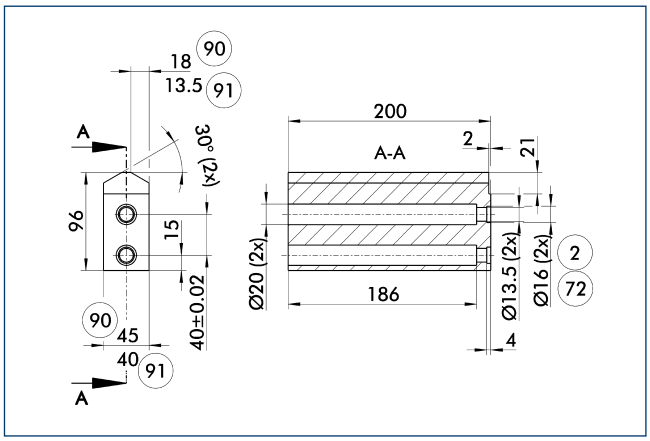

2 Finger connection
72 Fit for centering sleeves
90 ABR-PGZN-plus
91 SBR-PGZN-plus

Finger blanks for customized subsequent machining.

Description	ID	Material	Scope of delivery
Finger blanks			
ABR-PGZN-plus 200	0300015	Aluminum	1
SBR-PGZN-plus 200	0300025	16MnCr5	1

Inductive proximity switches

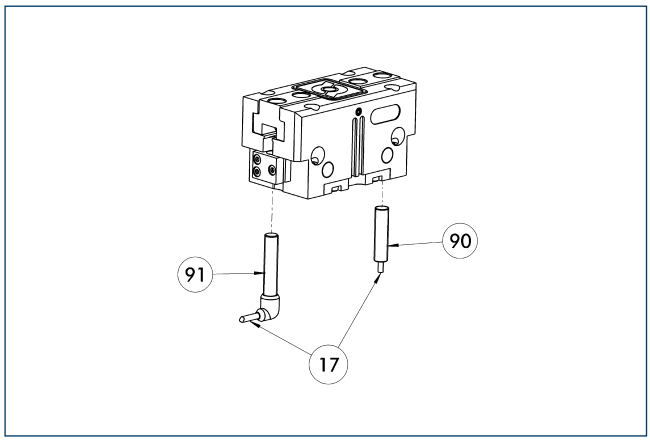

(17) Cable outlet
(90) IN ... sensor
(91) IN ...-SA sensor

Directly mounted limit position monitor.

Description	ID	Often combined
Inductive proximity switches		
IN 80-S-M12	0301578	
IN 80-S-M8	0301478	●
INK 80-S	0301550	
Inductive proximity switches with lateral outlet		
IN 80-S-M12-SA	0301587	
IN 80-S-M8-SA	0301483	●
INK 80-S-SA	0301566	
Cable extensions		
KV BG12-SG12 3P-0030-PNP	0301999	
KV BG12-SG12 3P-0060-PNP	0301998	
KV BW08-SG08 3P-0030-PNP	0301495	
KV BW08-SG08 3P-0100-PNP	0301496	
KV BW08-SG08 3P-0200-PNP	0301497	●
KV BW12-SG12 3P-0030-PNP	0301595	
KV BW12-SG12 3P-0100-PNP	0301596	
KV BW12-SG12 3P-0200-PNP	0301597	
Clip for plug / socket		
CLI-M12	0301464	
CLI-M8	0301463	
Connection cables		
KA BG08-L 3P-0300-PNP	0301622	●
KA BG08-L 3P-0500-PNP	0301623	
KA BG12-L 3P-0500-PNP	30016369	
KA BW08-L 3P-0300-PNP	0301594	
KA BW08-L 3P-0500-PNP	0301502	
KA BW12-L 3P-0300-PNP	0301503	
KA BW12-L 3P-0500-PNP	0301507	
Sensor distributor		
V2-M8	0301775	●
V2-M12	0301776	●
V4-M12	0301747	
V4-M8	0301746	

ⓘ Two sensors (closer/S) are required for each unit, plus extension cables as an option. Please note the minimum permitted bending radii for the sensor cables, which are generally 35 mm.

Flexible position sensor

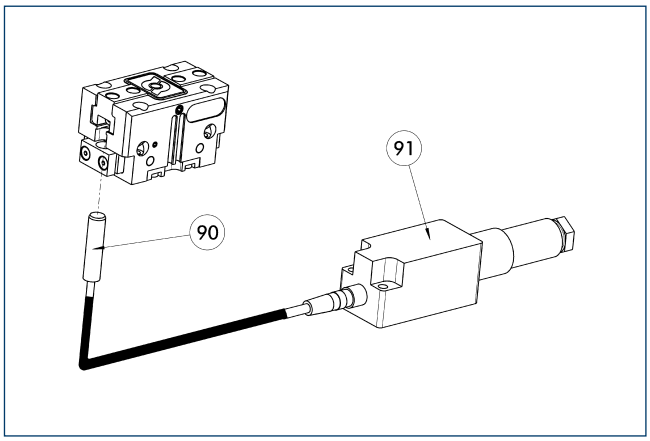

(90) FPS-S sensor
(91) FPS-F5 / -F5 T electronic processor

Flexible position monitoring of up to five positions.

Description	ID	Often combined
Mounting kit for FPS		
AS-FPS-PGZN-plus 200-1	0301640	
Electronic processor		
FPS-F5	0301805	●
FPS-F5 T	0301807	
Sensor		
FPS-S M8	0301704	
Clip for plug / socket		
CLI-M8	0301463	

ⓘ When using a FPS system, a FPS sensor (FPS-S) and a control unit (FPS-F5 / F5 T) are required for each gripper as well as a mounting kit (AS), if listed. Cable extensions (KV) are available as options in the "Accessories" catalog section.

MMS electronic magnetic switches

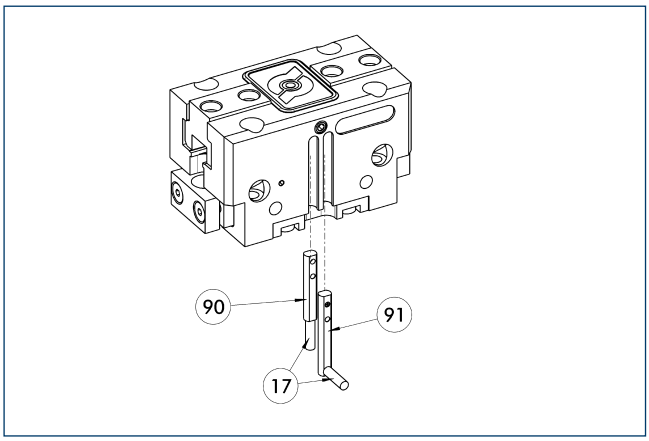

(17) Cable outlet
(91) MMS 22...-SA sensor
(90) MMS 22... sensor

End position monitoring for mounting in the C-slot.

Description	ID	Often combined
MMS electronic magnetic switches		
MMS 22-S-M8-PNP	0301032	●
MMSK 22-S-PNP	0301034	
MMS electronic magnetic switches with lateral cable outlet		
MMS 22-S-M8-PNP-SA	0301042	●
MMSK 22-S-PNP-SA	0301044	
Reed switches		
RMS 22-S-M8	0377720	●
Cable extensions		
KV BW08-SG08 3P-0030-PNP	0301495	
KV BW08-SG08 3P-0100-PNP	0301496	
KV BW08-SG08 3P-0200-PNP	0301497	●
Clip for plug / socket		
CLI-M8	0301463	
Connection cables		
KA BG08-L 3P-0300-PNP	0301622	●
KA BG08-L 3P-0500-PNP	0301623	
KA BW08-L 3P-0300-PNP	0301594	
KA BW08-L 3P-0500-PNP	0301502	
RSS radio sensor system		
RSS-T2	0377710	
Sensor distributor		
V2-M8	0301775	●
V4-M8	0301746	
V8-M8	0301751	

ⓘ Two sensors (closer/S) are required for each unit, plus extension cables as an option. Please note the minimum permitted bending radii for the sensor cables, which are generally 35 mm.

MMS PI1 programmable magnetic switches

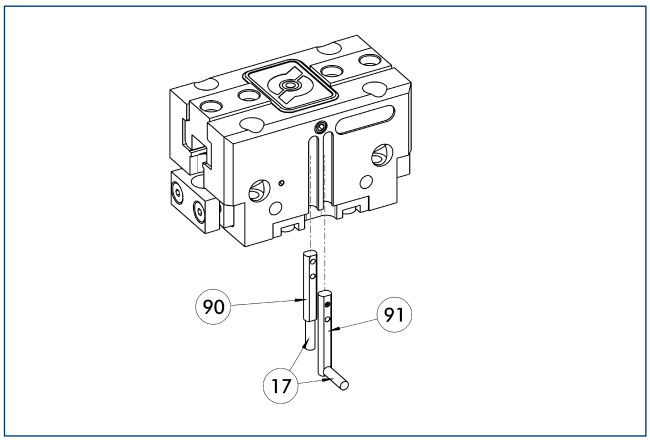

(17) Cable outlet
(91) MMS 22...-PI1-...-SA sensor
(90) MMS 22...-PI1-... sensor

Position query with one programmable position per sensor and electronics integrated in sensor. Programmable via MT magnet teaching tool (included in the scope of delivery) or ST plug teaching tool (optional). Limit position query mounted in C-groove. If the ST plug teaching tools are listed in the table, teaching can only take place with the ST plug teaching tools.

Description	ID	Often combined
MMS PI1 programmable magnetic switches		
MMS 22-PI1-S-M8-PNP	0301160	●
MMSK 22-PI1-S-PNP	0301162	
MMS PI1-HD programmable magnetic switches with stainless steel housing		
MMS 22-PI1-S-M8-PNP-HD	0301110	●
MMSK 22-PI1-S-PNP-HD	0301112	
MMS PI1 programmable magnetic switches with lateral cable outlet		
MMS 22-PI1-S-M8-PNP-SA	0301166	●
MMSK 22-PI1-S-PNP-SA	0301168	

ⓘ Two sensors (closer/S) are required for each unit, plus extension cables as an option. Please note the minimum permitted bending radii for the sensor cables, which are generally 35 mm. Connection cable, cable extensions, and sensor distributors can be found in the table for the MMS 22.

MMS-P programmable magnetic switches

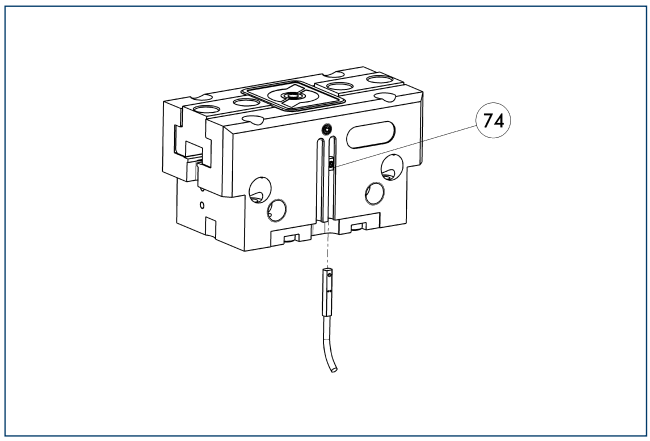

74 Stop for MMS-P

Position monitoring with two programmable positions per sensor. The end position monitoring is mounted in the C-slot.

Description	ID	Often combined
MMS-P programmable magnetic switches		
MMSK-P 22-S-PNP	0301371	
MMS-P 22-S-M8-PNP	0301370	●
Clip for plug / socket		
CLI-M8	0301463	
Connection cables		
KA BG08-L 4P-0500	0307767	●
KA BG08-L 4P-1000	0307768	
KA BW08-L 4P-0500	0307765	
KA BW08-L 4P-1000	0307766	
Sensor distributor		
V2-M8-4P-2XM8-3P	0301380	

ⓘ Per unit one sensor (closer/S) is required, optionally a cable extension. Please note the minimum permitted bending radii for the sensor cables, which are generally 35 mm.

APS-Z80 analog position sensor

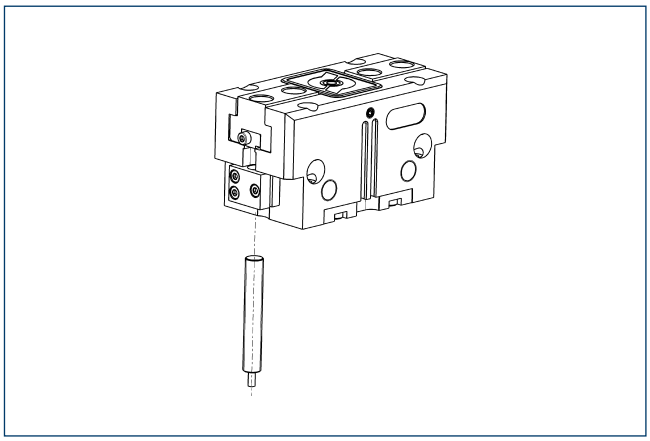

Contactlessly measuring, analog multi-position monitoring for any number of positions.

Description	ID	Often combined
Mounting kit for APS-Z80		
AS-APS-Z80-PGZN-plus 200-1	0302115	
Sensor		
APS-Z80-K	0302072	
APS-Z80-M8	0302070	●

ⓘ When using an APS system, one mounting kit (AS-APS-Z80) and one APS-Z80 sensor is required per gripper.

APS-M1 analog position sensor

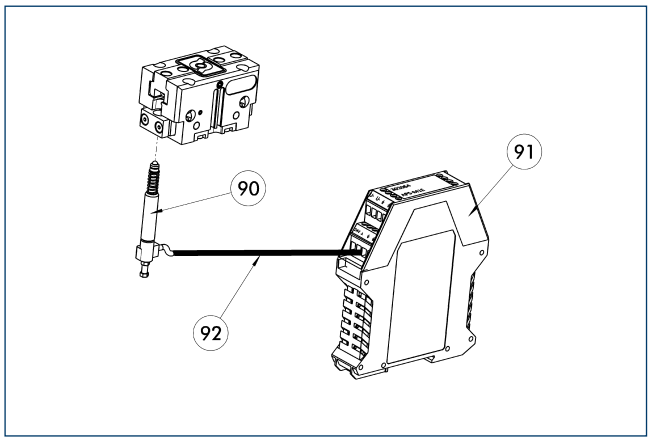

(90) APS-M1S sensor
(91) APS-M1E electronic processor
(92) APS-K extension cable

Analog multi position monitoring for any desired positions.

Description	ID	Often combined
Mounting kit for APS-M1		
AS-APS-M1-PGZN-plus 200-1/380-2	0302085	
Connection cables		
APS-K0200	0302066	●
APS-K0700	0302068	
Electronic processor		
APS-M1E	0302064	
Sensor		
APS-M1S	0302062	

ⓘ When using an APS system, for each gripper a mounting kit (AS-APS-M1), an APS-M1S sensor (incl. 3 m cable) as well as an electronics (APS-M1e) are required. An extension cable (APS-K) can be connected between the sensor and the electronics as an option. The max. cable length between the sensor and the electronics is 10 m, between the electronics and their control unit (PLC) it is max. 1 m.

Cylindrical reed switches

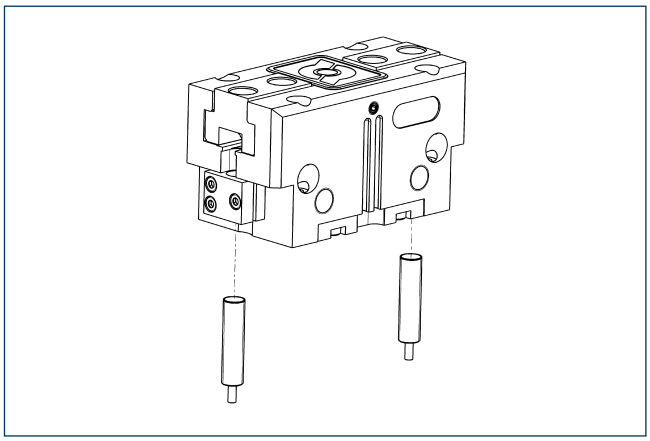

Limit position monitor can be mounted with mounting kit.

Description	ID	
Mounting kit for proximity switch		
AS-RMS 80 PGN/PZN-plus 160-380	0377727	
Reed switches		
RMS 80-S-M8	0377721	

ⓘ Two sensors (closer/S) are required for each unit, plus extension cables as an option. This mounting kit needs to be ordered optionally as an accessory. Two mounting kits are required per gripper. Please note the minimum permitted bending radii for the sensor cables, which are generally 35 mm.

JGP 240

SCHUNK Grippers pneumatic | 2-Finger Parallel Grippers | Universal Gripper

Gripping force, O.D. gripping

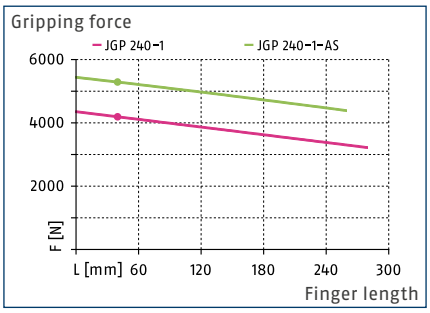

Gripping force, I.D. gripping

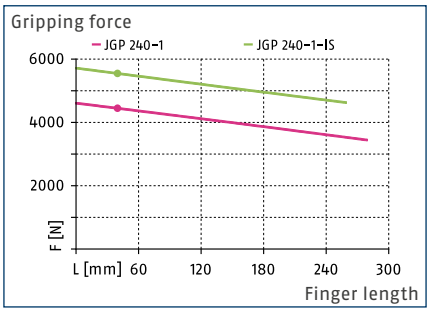

Finger load

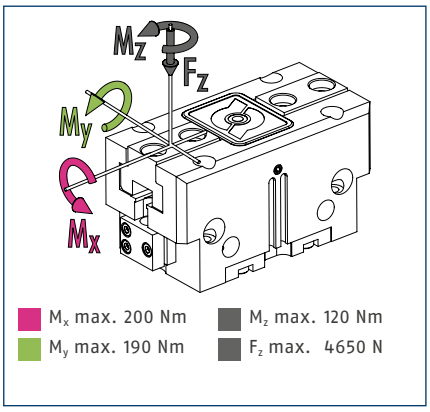

ⓘ The indicated moments and forces are static values, apply per base jaw and may occur simultaneously. M_y may arise in addition to the moment generated by the gripping force itself. If the max. permitted finger weight is exceeded, it is impreative to throttle the air supply so that the jaw movement occurs without any hitting or bouncing. Service life may be reduced.

Technical data

Description		JGP 240-1	JGP 240-1-AS	JGP 240-1-IS
ID		0308680	0308681	0308682
Stroke per jaw	[mm]	30	30	30
Closing- / opening force	[N]	4200/4440	5300/-	-/5540
min. spring force	[N]		1100	1100
Weight	[kg]	8	11.5	11.5
Recommended workpiece weight	[kg]	21.5	21.5	21.5
Fluid consumption per double stroke	[cm³]	650	810	995
min. / max. operating pressure	[bar]	2.5/8	4/6.5	4/6.5
Nominal operating pressure	[bar]	6	6	6
Closing- / opening time	[s]	0.45/0.45	0.35/0.65	0.65/0.35
Closing- / opening time only with spring	[s]		0.55	0.55
max. permitted finger length	[mm]	280	260	260
max. permitted weight per finger	[kg]	8.5	8.5	8.5
IP class		40	40	40
min. / max. ambient temperature	[°C]	5/90	5/90	5/90
Repeat accuracy	[mm]	0.04	0.04	0.04

Main view

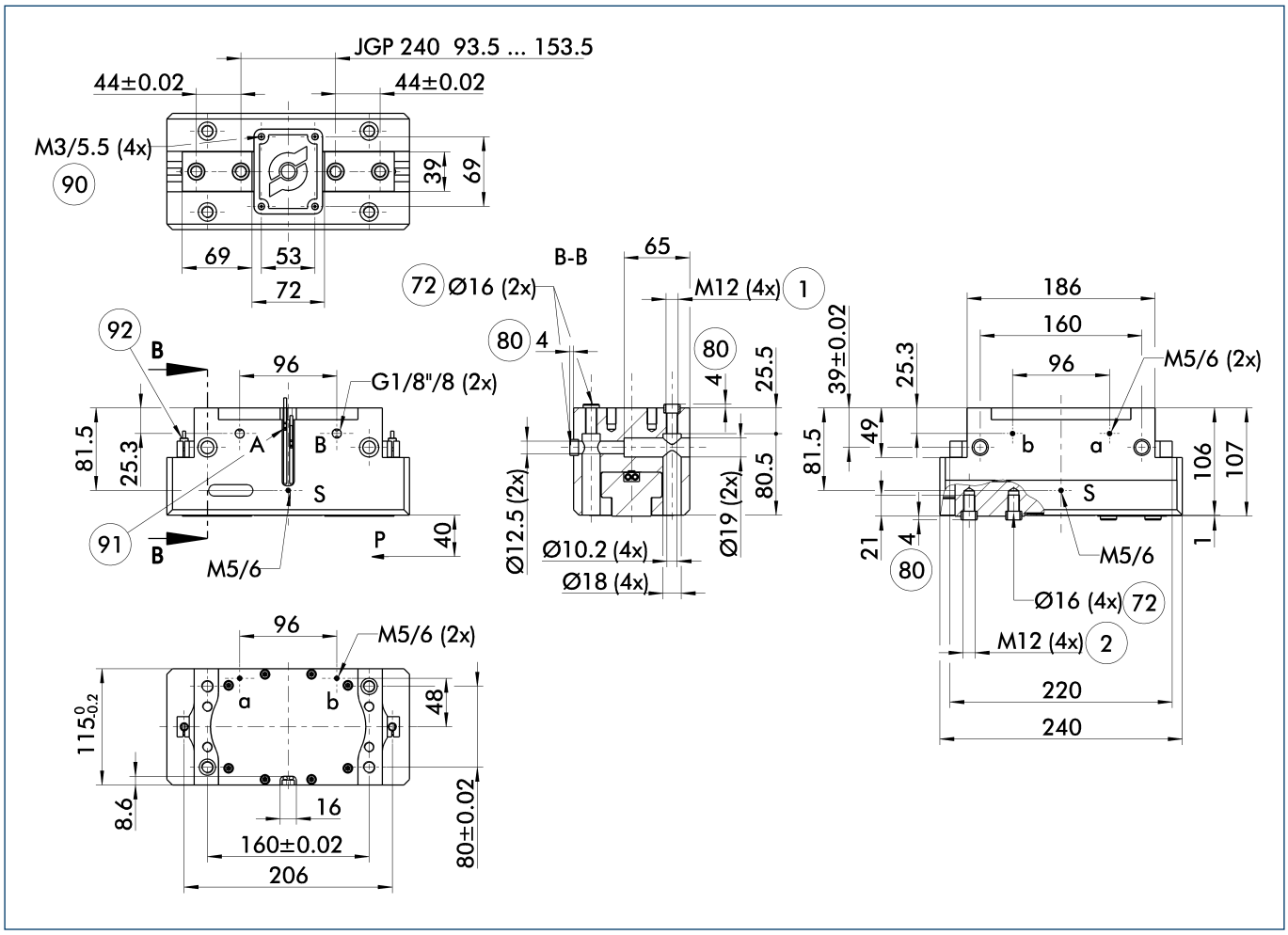

The drawing shows the gripper in the basic version with closed jaws, without dimensional consideration of the options described below.

ⓘ The SDV-P pressure maintenance valve can also be used for I.D. or O.D. gripping alternatively or in addition to the spring-loaded, mechanical gripping force maintenance device (see catalog section on "Accessories").

A, a Main / direct connection, gripper opening

B, b Main / direct connection, gripper closing

S Air purge connection (0.5 ... 1 bar)

(1) Gripper connection

(2) Finger connection

(72) Fit for centering sleeves

(80) Depth of the centering sleeve hole in the mating part

(90) Thread below the cover for fastening external attachments

(91) MMS 22... sensor

(92) IN ... sensor

Maximum permitted finger projection

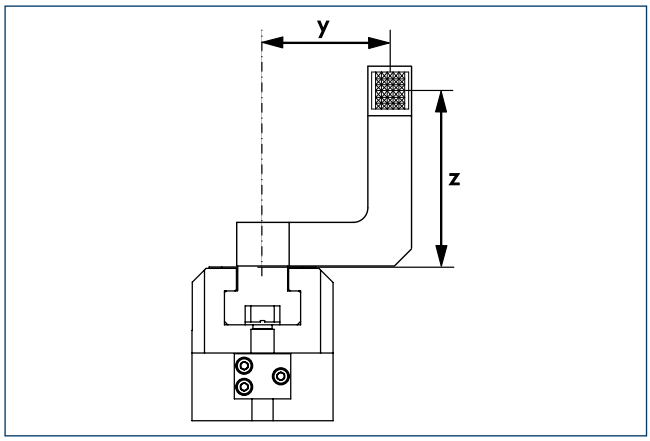

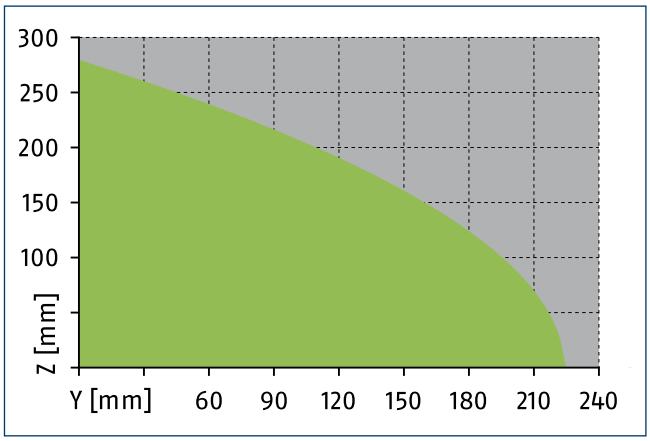

Permitted range

Inadmissible range

The curve applies for the base version (Stroke -1). For other versions, the curve must be offset in parallel corresponding to the max. permissible finger length.

Hose-free direct connection M5

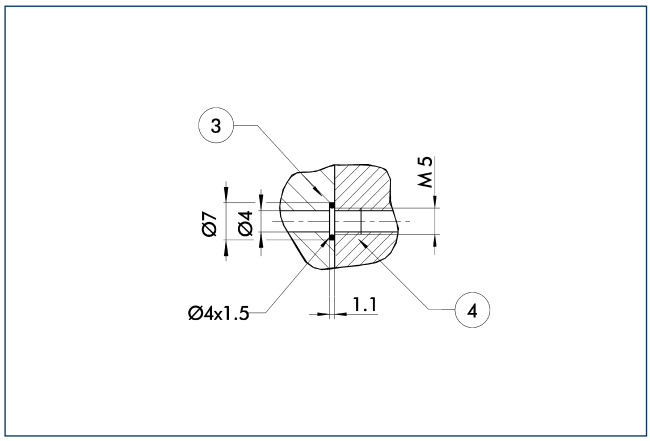

3 Adapter

4 Gripper

The direct connection is used for supplying compressed air without hoses. Instead, the pressure medium is fed through bore-holes in the mounting plate.

Gripping force maintenance device AS / IS

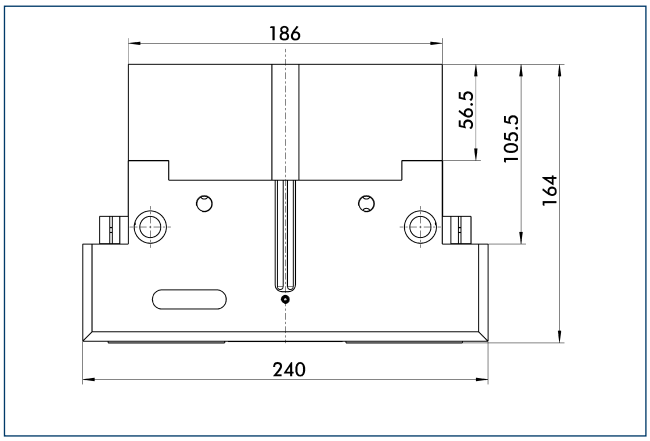

The mechanical maintenance of gripping force also assures a minimum gripping force in the case of a loss of pressure. With the AS / S variant, this acts as a closing force, and as an opening force for the IS variant. The maintenance of gripping force element can also be used as a means for increasing gripping force or for single actuated gripping.

SDV-P pressure maintenance valve

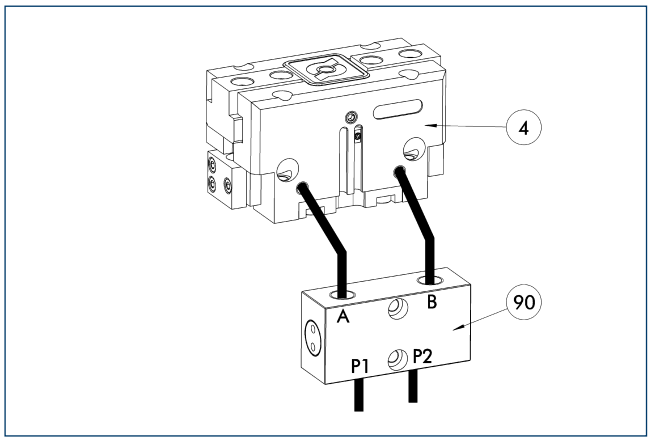

(4) Gripper
(90) SDV-P pressure maintenance valve

The SDV-P pressure maintenance valves ensure that the pressure in the piston chamber of pneumatic gripping, rotary, linear, and quick-change modules is maintained temporarily during an emergency stop.

Description	ID	
Pressure maintenance valve		
SDV-P 04	0403130	

BSWS jaw quick-change systems

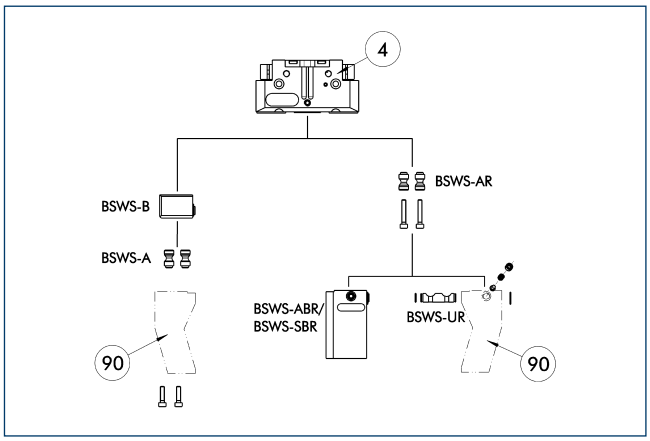

(4) Gripper
(90) Customized gripper fingers

There are various jaw quick-change systems available for the grippers. For detailed information, refer to the appropriate product.

Description	ID	
Jaw quick-change system base		
BSWS-B 240	0303035	
Jaw quick-change system adapter		
BSWS-A 240	0303034	

ⓘ Only the systems listed in the table can be used.

ZBA L-plus 240 intermediate jaws

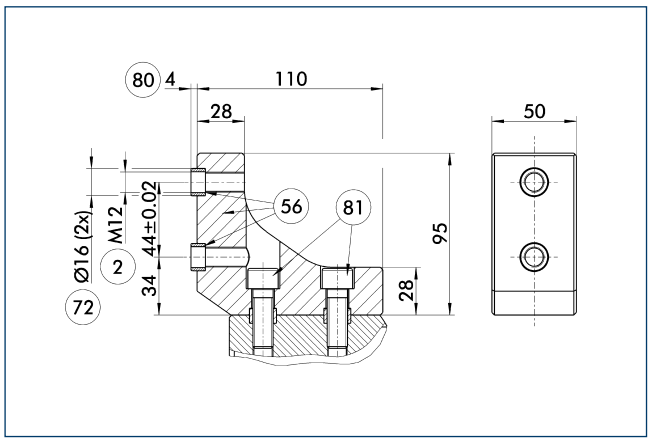

(2) Finger connection
(56) Included in delivery
(72) Fit for centering sleeves
(80) Depth of the centering sleeve hole in the mating part
(81) Not included in the scope of delivery

Optionally intermediate jaws can be used, enabling direct connection and alignment of top jaws and various standard accessories in Z-direction.

Description	ID	Material	Scope of delivery
Intermediate jaws			
ZBA-L-plus 240	0311782	Aluminum	1

ABR- / SBR-PGZN-plus 240 finger blanks

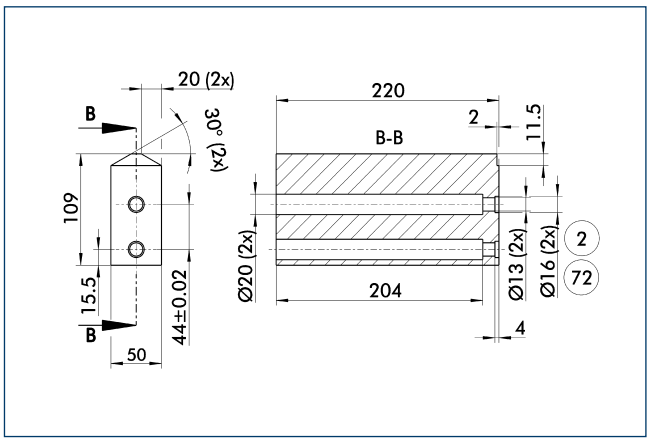

(2) Finger connection
(72) Fit for centering sleeves

Finger blanks for customized subsequent machining.

Description	ID	Material	Scope of delivery
Finger blanks			
ABR-PGZN-plus 240	0300017	Aluminum	1
SBR-PGZN-plus 240	0300027	16MnCr5	1

Inductive proximity switches

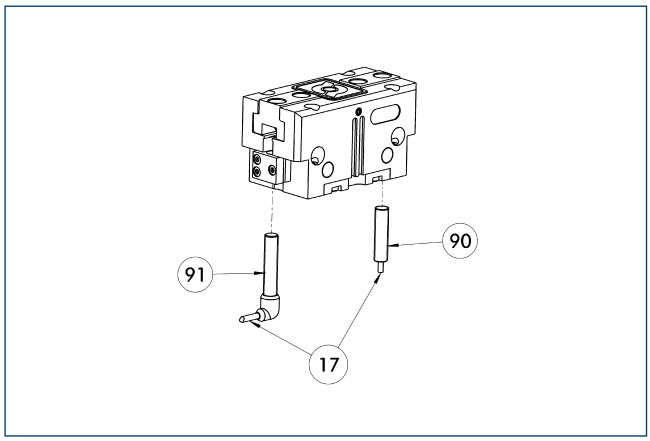

(17) Cable outlet
(90) IN ... sensor
(91) IN ...-SA sensor

Directly mounted limit position monitor.

Description	ID	Often combined
Inductive proximity switches		
IN 80-S-M12	0301578	
IN 80-S-M8	0301478	●
INK 80-S	0301550	
Inductive proximity switches with lateral outlet		
IN 80-S-M12-SA	0301587	
IN 80-S-M8-SA	0301483	●
INK 80-S-SA	0301566	
Cable extensions		
KV BG12-SG12 3P-0030-PNP	0301999	
KV BG12-SG12 3P-0060-PNP	0301998	
KV BW08-SG08 3P-0030-PNP	0301495	
KV BW08-SG08 3P-0100-PNP	0301496	
KV BW08-SG08 3P-0200-PNP	0301497	●
KV BW12-SG12 3P-0030-PNP	0301595	
KV BW12-SG12 3P-0100-PNP	0301596	
KV BW12-SG12 3P-0200-PNP	0301597	
Clip for plug / socket		
CLI-M12	0301464	
CLI-M8	0301463	
Connection cables		
KA BG08-L 3P-0300-PNP	0301622	●
KA BG08-L 3P-0500-PNP	0301623	
KA BG12-L 3P-0500-PNP	30016369	
KA BW08-L 3P-0300-PNP	0301594	
KA BW08-L 3P-0500-PNP	0301502	
KA BW12-L 3P-0300-PNP	0301503	
KA BW12-L 3P-0500-PNP	0301507	
Sensor distributor		
V2-M8	0301775	●
V2-M12	0301776	●
V4-M12	0301747	
V4-M8	0301746	

ⓘ Two sensors (closer/S) are required for each unit, plus extension cables as an option. Please note the minimum permitted bending radii for the sensor cables, which are generally 35 mm.

Flexible position sensor

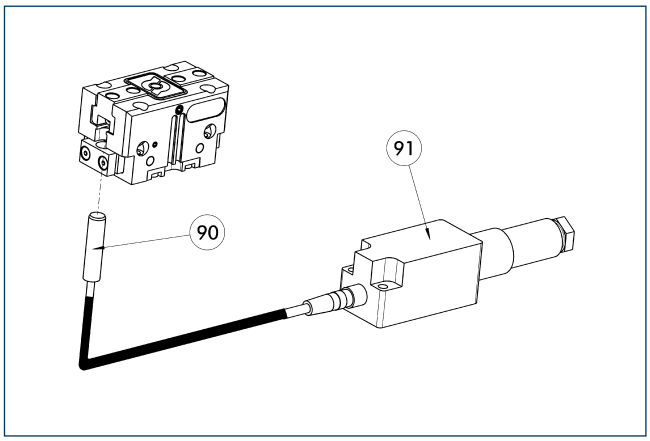

(90) FPS-S sensor
(91) FPS-F5 / -F5 T electronic processor

Flexible position monitoring of up to five positions.

Description	ID	Often combined
Mounting kit for FPS		
AS-FPS-PGZN-plus 240-1	0301643	
Electronic processor		
FPS-F5	0301805	●
FPS-F5 T	0301807	
Sensor		
FPS-S M8	0301704	
Clip for plug / socket		
CLI-M8	0301463	

ⓘ When using a FPS system, a FPS sensor (FPS-S) and a control unit (FPS-F5 / F5 T) are required for each gripper as well as a mounting kit (AS), if listed. Cable extensions (KV) are available as options in the "Accessories" catalog section.

MMS electronic magnetic switches

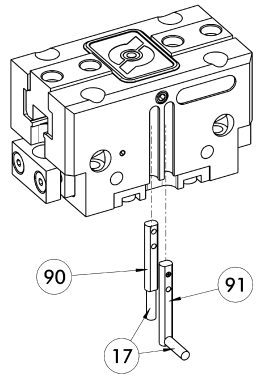

(17) Cable outlet
(91) MMS 22...-SA sensor
(90) MMS 22... sensor

End position monitoring for mounting in the C-slot.

Description	ID	Often combined
MMS electronic magnetic switches		
MMS 22-S-M8-PNP	0301032	●
MMSK 22-S-PNP	0301034	
MMS electronic magnetic switches with lateral cable outlet		
MMS 22-S-M8-PNP-SA	0301042	●
MMSK 22-S-PNP-SA	0301044	
Reed switches		
RMS 22-S-M8	0377720	●
Cable extensions		
KV BW08-SG08 3P-0030-PNP	0301495	
KV BW08-SG08 3P-0100-PNP	0301496	
KV BW08-SG08 3P-0200-PNP	0301497	●
Clip for plug / socket		
CLI-M8	0301463	
Connection cables		
KA BG08-L 3P-0300-PNP	0301622	●
KA BG08-L 3P-0500-PNP	0301623	
KA BW08-L 3P-0300-PNP	0301594	
KA BW08-L 3P-0500-PNP	0301502	
RSS radio sensor system		
RSS-T2	0377710	
Sensor distributor		
V2-M8	0301775	●
V4-M8	0301746	
V8-M8	0301751	

ⓘ Two sensors (closer/S) are required for each unit, plus extension cables as an option. Please note the minimum permitted bending radii for the sensor cables, which are generally 35 mm.

MMS PI1 programmable magnetic switches

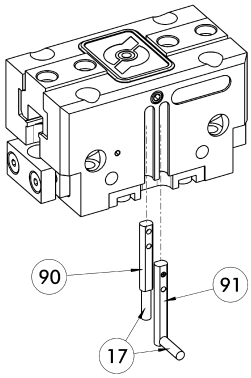

(17) Cable outlet
(91) MMS 22...-PI1-...-SA sensor
(90) MMS 22...-PI1-... sensor

Position query with one programmable position per sensor and electronics integrated in sensor. Programmable via MT magnet teaching tool (included in the scope of delivery) or ST plug teaching tool (optional). Limit position query mounted in C-groove. If the ST plug teaching tools are listed in the table, teaching can only take place with the ST plug teaching tools.

Description	ID	Often combined
MMS PI1 programmable magnetic switches		
MMS 22-PI1-S-M8-PNP	0301160	●
MMSK 22-PI1-S-PNP	0301162	
MMS PI1-HD programmable magnetic switches with stainless steel housing		
MMS 22-PI1-S-M8-PNP-HD	0301110	●
MMSK 22-PI1-S-PNP-HD	0301112	
MMS PI1 programmable magnetic switches with lateral cable outlet		
MMS 22-PI1-S-M8-PNP-SA	0301166	●
MMSK 22-PI1-S-PNP-SA	0301168	

ⓘ Two sensors (closer/S) are required for each unit, plus extension cables as an option. Please note the minimum permitted bending radii for the sensor cables, which are generally 35 mm. Connection cable, cable extensions, and sensor distributors can be found in the table for the MMS 22.

MMS-P programmable magnetic switches

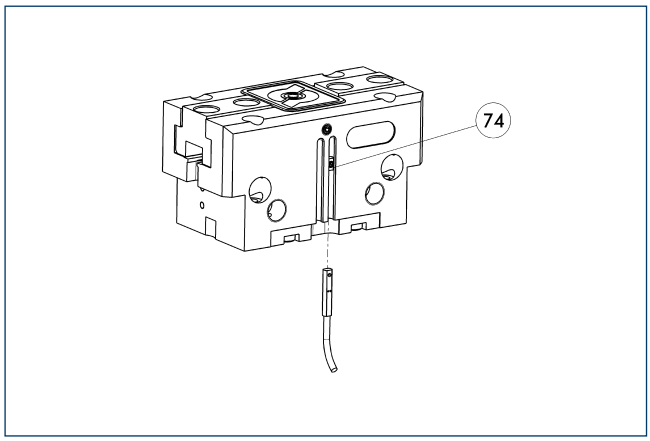

74 Stop for MMS-P

Position monitoring with two programmable positions per sensor. The end position monitoring is mounted in the C-slot.

Description	ID	Often combined
MMS-P programmable magnetic switches		
MMSK-P 22-S-PNP	0301371	
MMS-P 22-S-M8-PNP	0301370	●
Clip for plug / socket		
CLI-M8	0301463	
Connection cables		
KA BG08-L 4P-0500	0307767	●
KA BG08-L 4P-1000	0307768	
KA BW08-L 4P-0500	0307765	
KA BW08-L 4P-1000	0307766	
Sensor distributor		
V2-M8-4P-2XM8-3P	0301380	

ⓘ Per unit one sensor (closer/S) is required, optionally a cable extension. Please note the minimum permitted bending radii for the sensor cables, which are generally 35 mm.

APS-Z80 analog position sensor

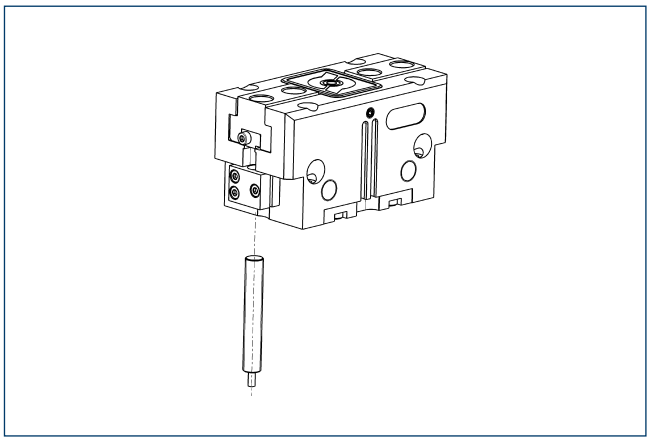

Contactlessly measuring, analog multi-position monitoring for any number of positions.

Description	ID	Often combined
Mounting kit for APS-Z80		
AS-APS-Z80-PGZN-plus 240-1	0302116	
Sensor		
APS-Z80-K	0302072	
APS-Z80-M8	0302070	●

ⓘ When using an APS system, one mounting kit (AS-APS-Z80) and one APS-Z80 sensor is required per gripper.

APS-M1 analog position sensor

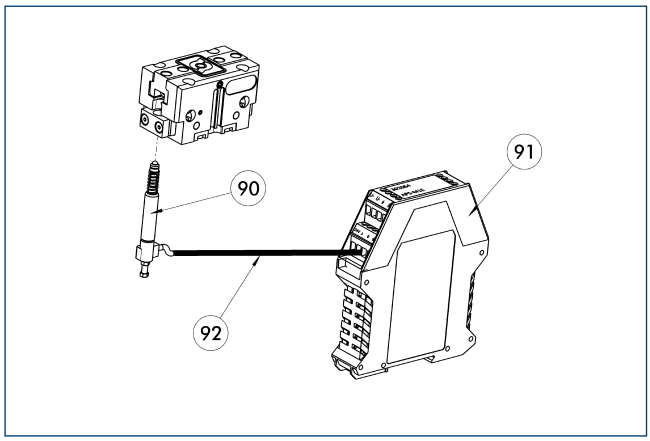

(90) APS-M1S sensor
(91) APS-M1E electronic processor
(92) APS-K extension cable

Analog multi position monitoring for any desired positions.

Description	ID	Often combined
Mounting kit for APS-M1		
AS-APS-M1-PGZN-plus 240-1	0302087	
Connection cables		
APS-K0200	0302066	●
APS-K0700	0302068	
Electronic processor		
APS-M1E	0302064	
Sensor		
APS-M1S	0302062	

ⓘ When using an APS system, for each gripper a mounting kit (AS-APS-M1), an APS-M1S sensor (incl. 3 m cable) as well as an electronics (APS-M1e) are required. An extension cable (APS-K) can be connected between the sensor and the electronics as an option. The max. cable length between the sensor and the electronics is 10 m, between the electronics and their control unit (PLC) it is max. 1 m.

Cylindrical reed switches

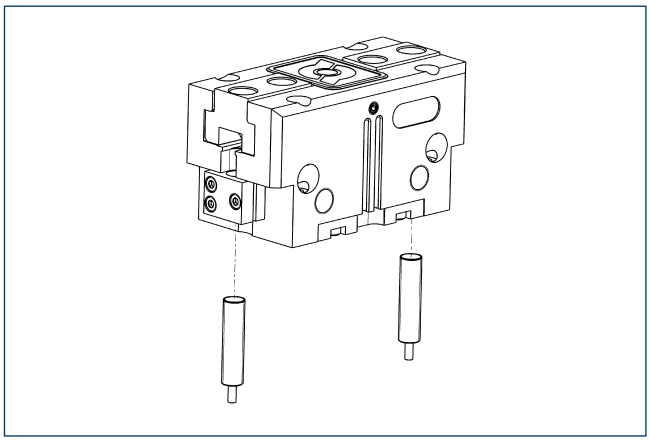

Limit position monitor can be mounted with mounting kit.

Description	ID	
Mounting kit for proximity switch		
AS-RMS 80 PGN/PZN-plus 160-380	0377727	
Reed switches		
RMS 80-S-M8	0377721	

ⓘ Two sensors (closer/S) are required for each unit, plus extension cables as an option. This mounting kit needs to be ordered optionally as an accessory. Two mounting kits are required per gripper. Please note the minimum permitted bending radii for the sensor cables, which are generally 35 mm.

JGP 300

SCHUNK Grippers pneumatic | 2-Finger Parallel Grippers | Universal Gripper

Gripping force, O.D. gripping

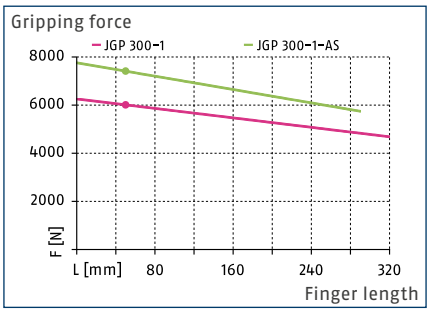

Gripping force, I.D. gripping

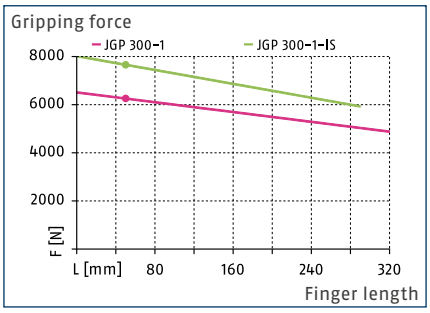

Finger load

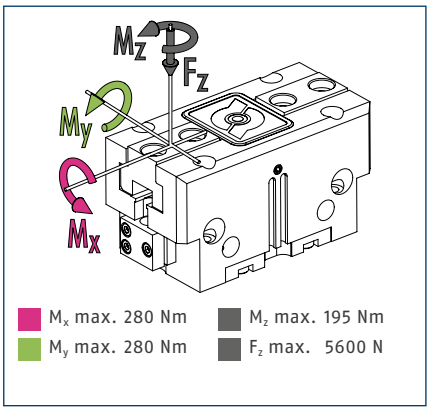

ⓘ The indicated moments and forces are static values, apply per base jaw and may occur simultaneously. M_y may arise in addition to the moment generated by the gripping force itself. If the max. permitted finger weight is exceeded, it is impreative to throttle the air supply so that the jaw movement occurs without any hitting or bouncing. Service life may be reduced.

Technical data

Description		JGP 300-1	JGP 300-1-AS	JGP 300-1-IS
ID		0308690	0308691	0308692
Stroke per jaw	[mm]	35	35	35
Closing- / opening force	[N]	6000/6260	7400/-	-/7660
min. spring force	[N]		1400	1400
Weight	[kg]	13.5	17.5	17.5
Recommended workpiece weight	[kg]	30	30	30
Fluid consumption per double stroke	[cm³]	1040	1295	1560
min. / max. operating pressure	[bar]	2.5/8	4/6.5	4/6.5
Nominal operating pressure	[bar]	6	6	6
Closing- / opening time	[s]	0.5/0.5	0.4/0.7	0.7/0.4
Closing- / opening time only with spring	[s]		0.60	0.60
max. permitted finger length	[mm]	300	270	270
max. permitted weight per finger	[kg]	11.5	11.5	11.5
IP class		40	40	40
min. / max. ambient temperature	[°C]	5/90	5/90	5/90
Repeat accuracy	[mm]	0.05	0.05	0.05

Main view

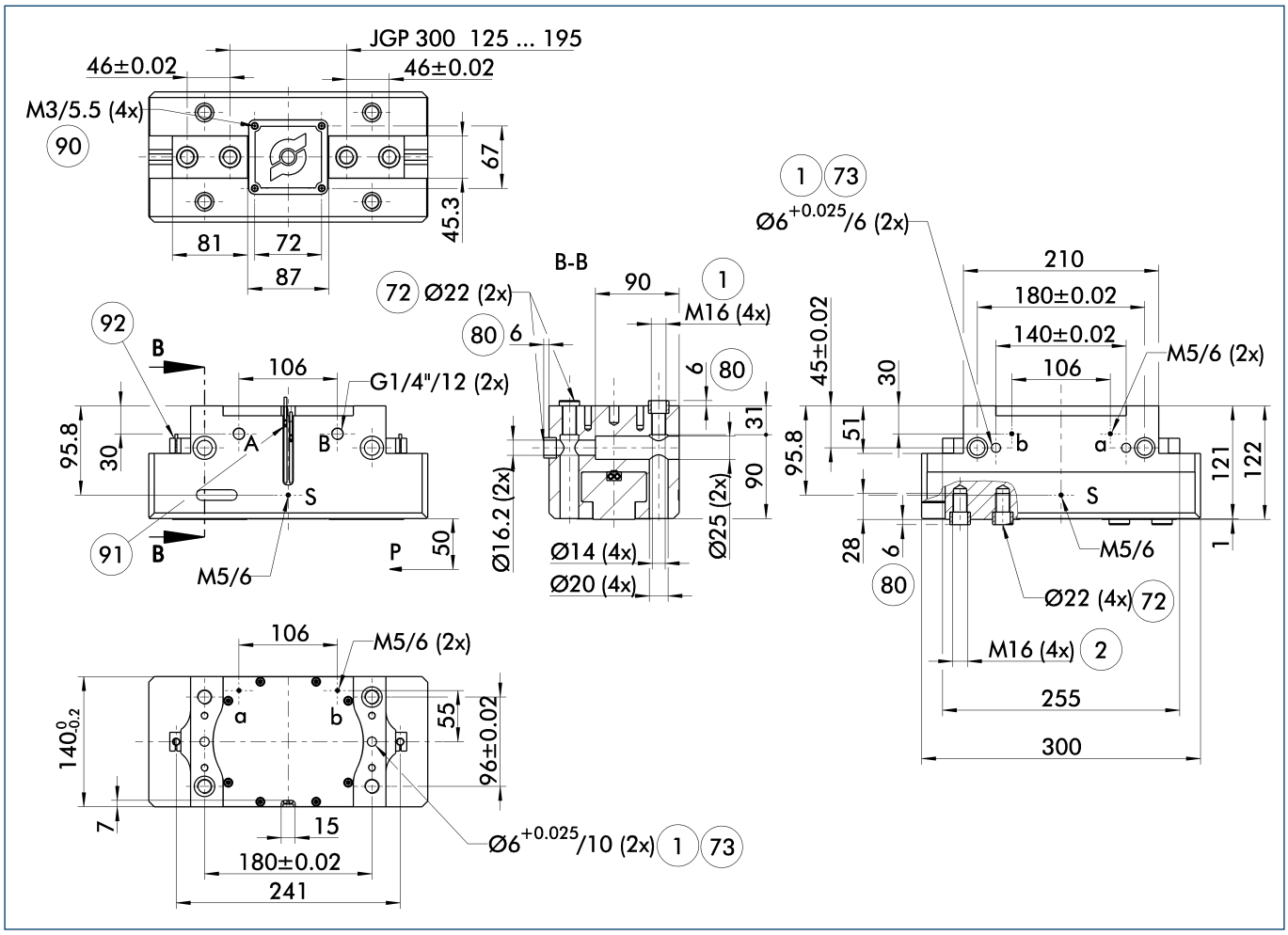

The drawing shows the gripper in the basic version with closed jaws, without dimensional consideration of the options described below.

ⓘ The SDV-P pressure maintenance valve can also be used for I.D. or O.D. gripping alternatively or in addition to the spring-loaded, mechanical gripping force maintenance device (see catalog section on "Accessories").

A, a Main / direct connection, gripper opening

B, b Main / direct connection, gripper closing

S Air purge connection (0.5 ... 1 bar)

(1) Gripper connection

(2) Finger connection

(72) Fit for centering sleeves

(73) Fit for centering pins

(80) Depth of the centering sleeve hole in the mating part

(90) Thread below the cover for fastening external attachments

(91) MMS 22... sensor

(92) IN ... sensor

Maximum permitted finger projection

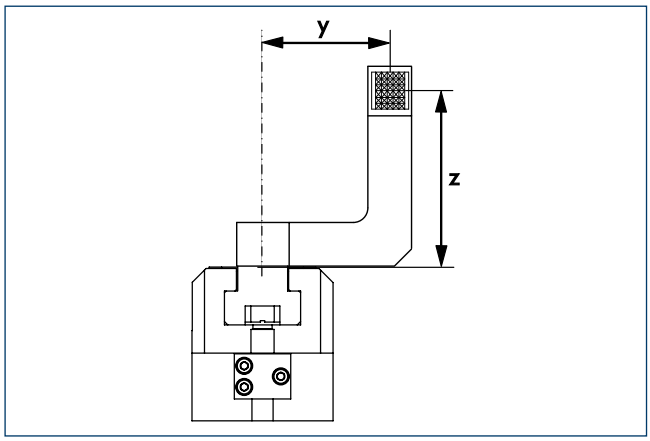

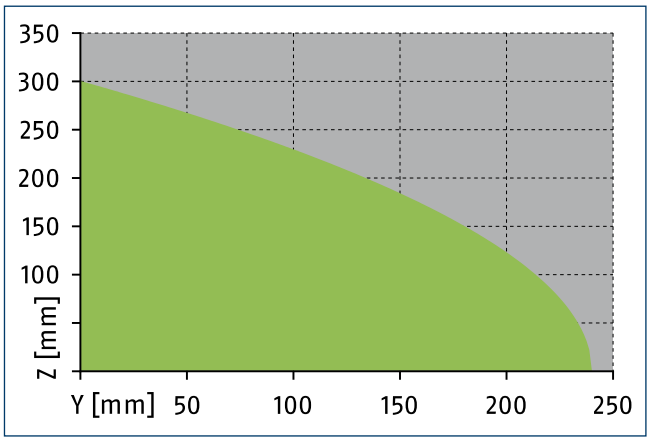

Permitted range Inadmissible range

The curve applies for the base version (Stroke -1). For other versions, the curve must be offset in parallel corresponding to the max. permissible finger length.

Hose-free direct connection M5

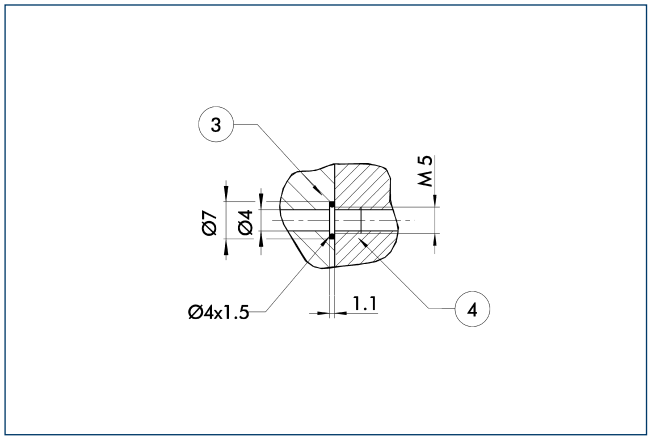

(3) Adapter (4) Gripper

The direct connection is used for supplying compressed air without hoses. Instead, the pressure medium is fed through bore-holes in the mounting plate.

Gripping force maintenance device AS / IS

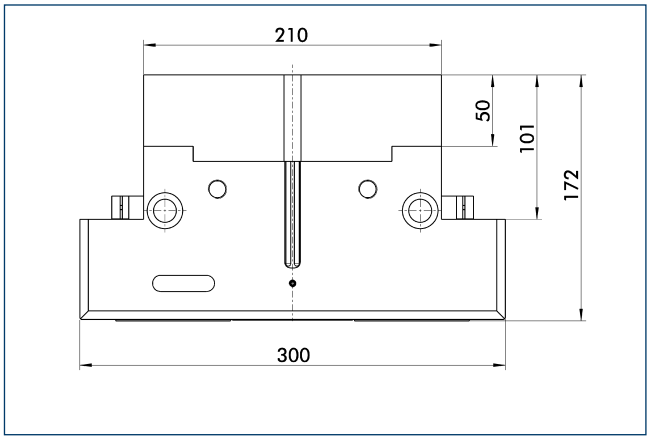

The mechanical maintenance of gripping force also assures a minimum gripping force in the case of a loss of pressure. With the AS / S variant, this acts as a closing force, and as an opening force for the IS variant. The maintenance of gripping force element can also be used as a means for increasing gripping force or for single actuated gripping.

SDV-P pressure maintenance valve

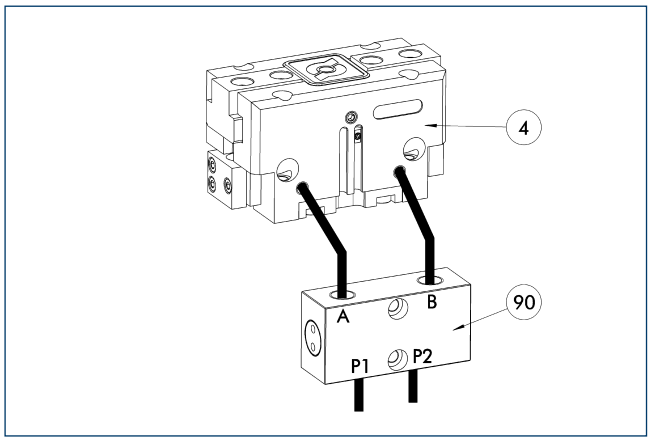

(4) Gripper

(90) SDV-P pressure maintenance valve

The SDV-P pressure maintenance valves ensure that the pressure in the piston chamber of pneumatic gripping, rotary, linear, and quick-change modules is maintained temporarily during an emergency stop.

Description	ID	
Pressure maintenance valve		
SDV-P 10	0300108	
SDV-P 10-E	0300109	

BSWS jaw quick-change systems

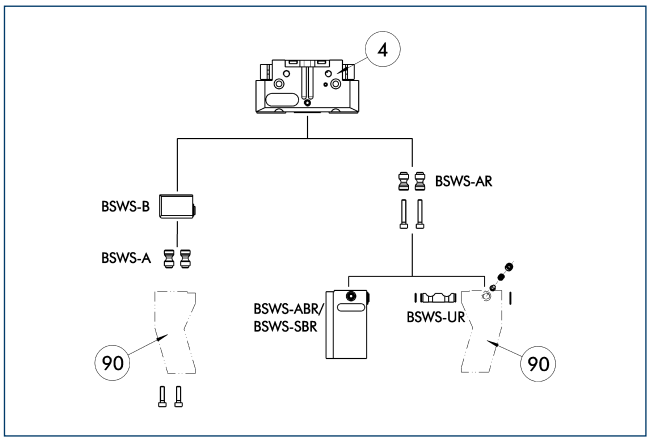

(4) Gripper

(90) Customized gripper fingers

There are various jaw quick-change systems available for the grippers. For detailed information, refer to the appropriate product.

Description	ID	
Jaw quick-change system base		
BSWS-B 300	0303037	
Jaw quick-change system adapter		
BSWS-A 300	0303036	

ⓘ Only the systems listed in the table can be used.

FMS-ZBA / ZBP 300 force-measuring jaws

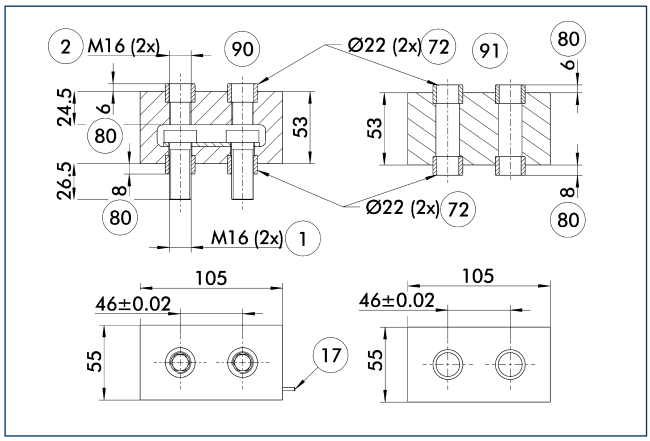

1 Gripper connection
2 Finger connection
17 Cable outlet
72 Fit for centering sleeves
80 Depth of the centering sleeve hole in the mating part
90 Active intermediate jaws
91 Passive intermediate jaws

Force measuring jaws measure gripping forces, but can also determine workpiece weights or dimensional deviations. There are active and passive intermediate jaws (FMS-ZBA or FMS-ZBP). At least one active force measuring jaw is required per gripper, the rest can be passive. For each active jaw, a FMS-A control unit and a FMS-AK connection cable are required.

Description	ID	Often combined
Active intermediate jaws		
FMS-ZBA 300	0301846	
Passive intermediate jaws		
FMS-ZBP 300	0301847	
Connection cables		
FMS-AK0200	0301820	●
FMS-AK0500	0301821	
FMS-AK1000	0301822	
FMS-AK2000	0301823	
Electronic processor		
FMS-A2	0301811	

ABR- / SBR-PGZN-plus 300 finger blanks

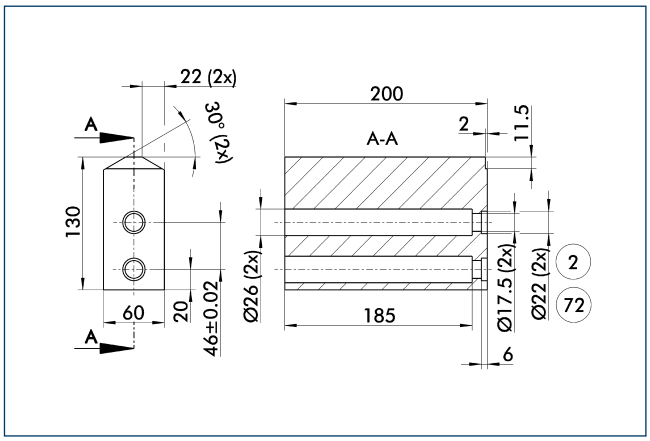

2 Finger connection
72 Fit for centering sleeves

Finger blanks for customized subsequent machining.

Description	ID	Material	Scope of delivery
Finger blanks			
ABR-PGZN-plus 300	0300016	Aluminum	1
SBR-PGZN-plus 300	0300026	16MnCr5	1

Inductive proximity switches

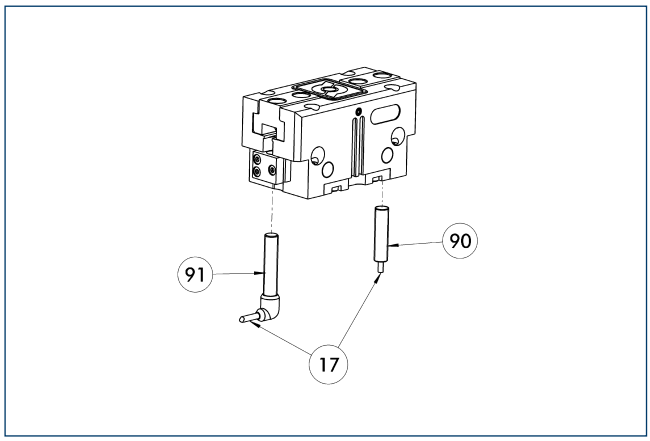

(17) Cable outlet
(90) IN ... sensor
(91) IN ...-SA sensor

Directly mounted limit position monitor.

Description	ID	Often combined
Inductive proximity switches		
IN 80-S-M12	0301578	
IN 80-S-M8	0301478	●
INK 80-S	0301550	
Inductive proximity switches with lateral outlet		
IN 80-S-M12-SA	0301587	
IN 80-S-M8-SA	0301483	●
INK 80-S-SA	0301566	
Cable extensions		
KV BG12-SG12 3P-0030-PNP	0301999	
KV BG12-SG12 3P-0060-PNP	0301998	
KV BW08-SG08 3P-0030-PNP	0301495	
KV BW08-SG08 3P-0100-PNP	0301496	
KV BW08-SG08 3P-0200-PNP	0301497	●
KV BW12-SG12 3P-0030-PNP	0301595	
KV BW12-SG12 3P-0100-PNP	0301596	
KV BW12-SG12 3P-0200-PNP	0301597	
Clip for plug / socket		
CLI-M12	0301464	
CLI-M8	0301463	
Connection cables		
KA BG08-L 3P-0300-PNP	0301622	●
KA BG08-L 3P-0500-PNP	0301623	
KA BG12-L 3P-0500-PNP	30016369	
KA BW08-L 3P-0300-PNP	0301594	
KA BW08-L 3P-0500-PNP	0301502	
KA BW12-L 3P-0300-PNP	0301503	
KA BW12-L 3P-0500-PNP	0301507	
Sensor distributor		
V2-M8	0301775	●
V2-M12	0301776	●
V4-M12	0301747	
V4-M8	0301746	

ⓘ Two sensors (closer/S) are required for each unit, plus extension cables as an option. Please note the minimum permitted bending radii for the sensor cables, which are generally 35 mm.

Flexible position sensor

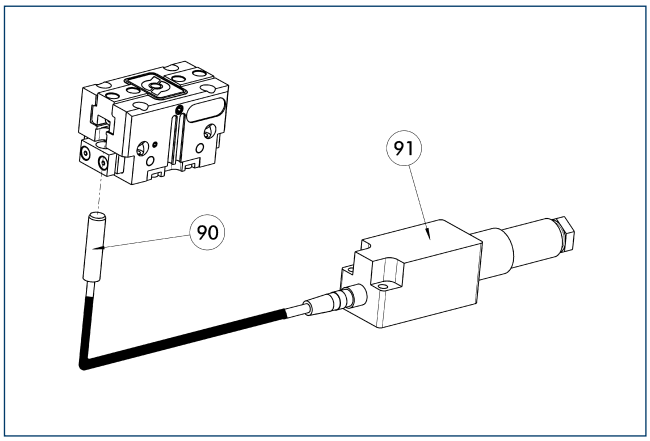

(90) FPS-S sensor
(91) FPS-F5 / -F5 T electronic processor

Flexible position monitoring of up to five positions.

Description	ID	Often combined
Mounting kit for FPS		
AS-FPS-PGZN-plus 300-2	0301642	
Electronic processor		
FPS-F5	0301805	●
FPS-F5 T	0301807	
Sensor		
FPS-S M8	0301704	
Clip for plug / socket		
CLI-M8	0301463	

ⓘ When using a FPS system, a FPS sensor (FPS-S) and a control unit (FPS-F5 / F5 T) are required for each gripper as well as a mounting kit (AS), if listed. Cable extensions (KV) are available as options in the "Accessories" catalog section.

MMS electronic magnetic switches

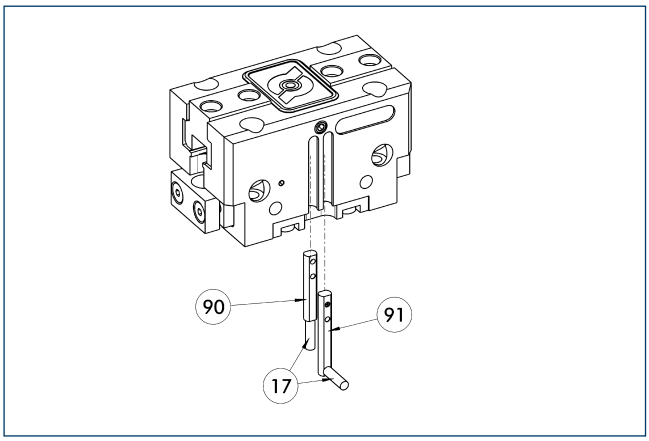

17 Cable outlet
91 MMS 22...-SA sensor
90 MMS 22... sensor

End position monitoring for mounting in the C-slot.

Description	ID	Often combined
MMS electronic magnetic switches		
MMS 22-S-M8-PNP	0301032	●
MMSK 22-S-PNP	0301034	
MMS electronic magnetic switches with lateral cable outlet		
MMS 22-S-M8-PNP-SA	0301042	●
MMSK 22-S-PNP-SA	0301044	
Reed switches		
RMS 22-S-M8	0377720	●
Cable extensions		
KV BW08-SG08 3P-0030-PNP	0301495	
KV BW08-SG08 3P-0100-PNP	0301496	
KV BW08-SG08 3P-0200-PNP	0301497	●
Clip for plug / socket		
CLI-M8	0301463	
Connection cables		
KA BG08-L 3P-0300-PNP	0301622	●
KA BG08-L 3P-0500-PNP	0301623	
KA BW08-L 3P-0300-PNP	0301594	
KA BW08-L 3P-0500-PNP	0301502	
RSS radio sensor system		
RSS-T2	0377710	
Sensor distributor		
V2-M8	0301775	●
V4-M8	0301746	
V8-M8	0301751	

ⓘ Two sensors (closer/S) are required for each unit, plus extension cables as an option. Please note the minimum permitted bending radii for the sensor cables, which are generally 35 mm.

MMS PI1 programmable magnetic switches

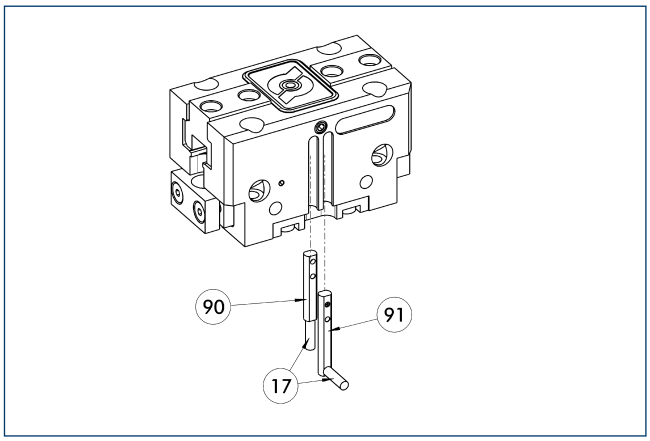

17 Cable outlet
91 MMS 22...-PI1-...-SA sensor
90 MMS 22...-PI1-... sensor

Position query with one programmable position per sensor and electronics integrated in sensor. Programmable via MT magnet teaching tool (included in the scope of delivery) or ST plug teaching tool (optional). Limit position query mounted in C-groove. If the ST plug teaching tools are listed in the table, teaching can only take place with the ST plug teaching tools.

Description	ID	Often combined
MMS PI1 programmable magnetic switches		
MMS 22-PI1-S-M8-PNP	0301160	●
MMSK 22-PI1-S-PNP	0301162	
MMS PI1-HD programmable magnetic switches with stainless steel housing		
MMS 22-PI1-S-M8-PNP-HD	0301110	●
MMSK 22-PI1-S-PNP-HD	0301112	
MMS PI1 programmable magnetic switches with lateral cable outlet		
MMS 22-PI1-S-M8-PNP-SA	0301166	●
MMSK 22-PI1-S-PNP-SA	0301168	

ⓘ Two sensors (closer/S) are required for each unit, plus extension cables as an option. Please note the minimum permitted bending radii for the sensor cables, which are generally 35 mm. Connection cable, cable extensions, and sensor distributors can be found in the table for the MMS 22.

APS-Z80 analog position sensor

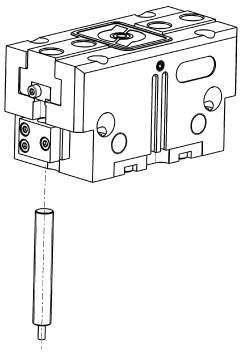

Contactlessly measuring, analog multi-position monitoring for any number of positions.

Description	ID	Often combined
Mounting kit for APS-Z80		
AS-APS-Z80-PGZN-plus 300-1	0302117	
Sensor		
APS-Z80-K	0302072	
APS-Z80-M8	0302070	●

ⓘ When using an APS system, one mounting kit (AS-APS-Z80) and one APS-Z80 sensor is required per gripper.

APS-M1 analog position sensor

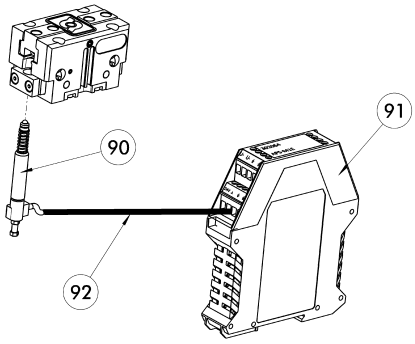

90 APS-M1S sensor
91 APS-M1E electronic processor
92 APS-K extension cable

Analog multi position monitoring for any desired positions.

Description	ID	Often combined
Mounting kit for APS-M1		
AS-APS-M1-PGZN-plus 300-1	0302088	
Connection cables		
APS-K0200	0302066	●
APS-K0700	0302068	
Electronic processor		
APS-M1E	0302064	
Sensor		
APS-M1S	0302062	

ⓘ When using an APS system, for each gripper a mounting kit (AS-APS-M1), an APS-M1S sensor (incl. 3 m cable) as well as an electronics (APS-M1e) are required. An extension cable (APS-K) can be connected between the sensor and the electronics as an option. The max. cable length between the sensor and the electronics is 10 m, between the electronics and their control unit (PLC) it is max. 1 m.

Cylindrical reed switches

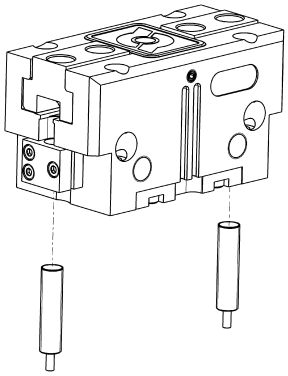

Limit position monitor can be mounted with mounting kit.

Description	ID	
Mounting kit for proximity switch		
AS-RMS 80 PGN/PZN-plus 160-380	0377727	
Reed switches		
RMS 80-S-M8	0377721	

ⓘ Two sensors (closer/S) are required for each unit, plus extension cables as an option. This mounting kit needs to be ordered optionally as an accessory. Two mounting kits are required per gripper. Please note the minimum permitted bending radii for the sensor cables, which are generally 35 mm.

Flexible. Compact. Robust.
PGF Universal Gripper

Universal parallel gripper with surface-guided base jaw

Field of Application

Suitable for clean working environments and high part diversity due to its long jaw stroke and high gripping forces

Advantages – Your benefit

Precise flat guidance for very good guidance characteristics

Large stroke at compact design for minimal interfering contours

Mounting from two sides in three screw directions for universal and flexible gripper assembly

Air supply via hose-free direct connection or screw connections for flexible pressure supply in all automated systems

M5 connection on both sides of the guidances for the use of lubricating nipples

Sizes	Weight	Gripping force	Stroke per jaw	Workpiece weight
Quantity: 5	0.3 .. 5.3 kg	240 .. 1900 N	7.5 .. 31.5 mm	1.2 .. 7.1 kg

Functional Description

The round piston is pushed upwards or downwards with compressed air.

The angled active surfaces of the wedge-hook produce a synchronized, parallel jaw motion.

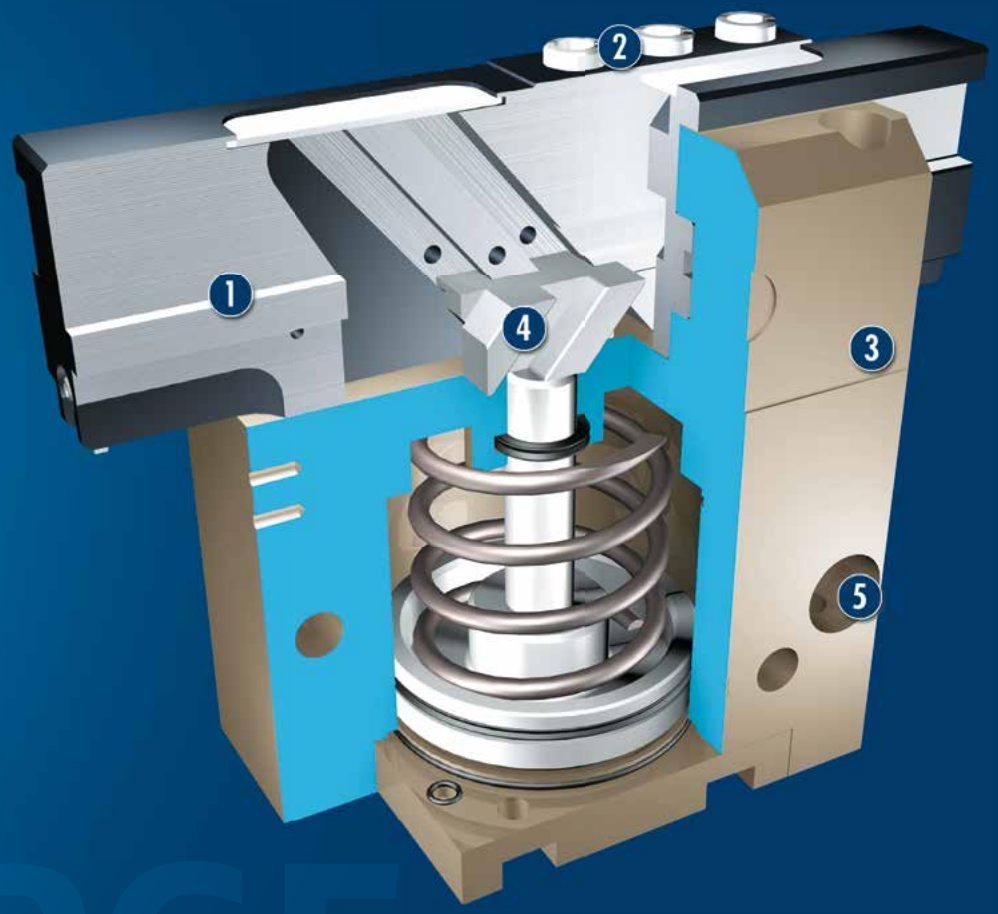

① **Sliding guide**
Precise gripping through flat, low-play precision ground guidance along the entire length of the housing

② **Base jaw**
for the connection of workpiece-specific gripper fingers

③ **Housing**
Weight-optimized through application of high-strength aluminum alloy

④ **Wedge-hook design**
for high power transmission and centric gripping

⑤ **Centering and mounting possibilities**
for universal assembly of the gripper

CAD data, operating manuals and other current product documents are available at **www.schunk.com**

General Notes about the Series

Operating principle: Wedge-hook kinematics

Housing material: Aluminum alloy, anodized

Base jaw material: Steel

Actuation: pneumatic, with filtered compressed air as per DIN ISO 8573-1: 7 4 4

Warranty: 24 months (details, general terms and conditions and operating manuals can be downloaded at www.schunk.com)

Scope of delivery: Mount for proximity switch, centering sleeves, O-rings for direct connection, assembly and operating manual with declaration of incorporation.

Gripping force maintenance device: possible with SDV-P pressure maintenance valve

Gripping force: is the arithmetic total of the gripping force applied to each gripper jaw at distance P (see illustration).

Finger length: is measured from the upper edge of the gripper housing in the direction of the main axis. The breach of the max. permitted finger length can bring higher abrasion. The maximum permissible finger length applies up to the nominal operating pressure. With higher pressures, the finger length must be reduced proportionally to the nominal operating pressure.

Repeat accuracy: is defined as the spread of the limit position after 100 consecutive strokes.

Workpiece weight: is calculated for a force-fit connection with a coefficient of friction of 0.1 and a safety factor of 2 against slippage of the workpiece on acceleration due to gravity g. Considerably heavier workpiece weights are permitted with form-fit gripping.

Closing and opening times: are purely the times that the base jaws or fingers are in motion. Valve switching times, hose filling times or PLC reaction times are not included in the above times and must be taken into consideration when determining cycle times.

Application example

Assembly unit for mounting a pin in a bore with tolerances for the position. The compensation unit compensates for the planar offset without turning or tilting the workpiece.

1. PGF 2-Finger Parallel Gripper with top finger and workpiece
2. AGE-XY Compensation Unit

SCHUNK offers more ...

The following components make the product PGF even more productive – the suitable addition for the highest functionality, flexibility, reliability, and controlled production.

Centering Sleeves

Fittings

Inductive Proximity Switches

Sensor Cables

Flexible Position Sensor

Gripper Pads

Sensor Distributor

Plastic Inserts

SDV-P Pressure Maintenance Valve

ⓘ Further information regarding the products can be found on the following product pages or at www.schunk.com. Please contact us for further information: SCHUNK technical hotline +49-7133-103-2696

Options and special Information

Gripping force maintenance version AS / IS: The mechanical gripping force maintenance version ensures a minimum gripping force also in the case of a drop in pressure. In the AS / S version this has the effect of a closing force, in the IS version of an opening force.
Due to the long guidance, the gripper is highly resistant during gripping operations where the gripper fingers are exposed to high moment loads. Grippers with a higher exchange accuracy are available on request.

PGF 50

SCHUNK Grippers pneumatic | 2-Finger Parallel Grippers | Universal Gripper

Gripping force, O.D. gripping

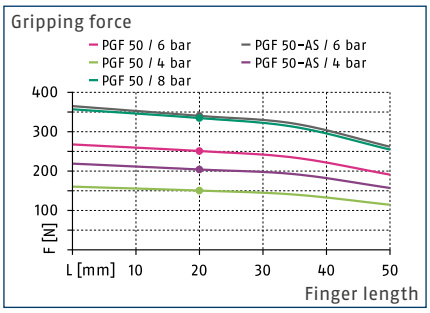

Gripping force, I.D. gripping

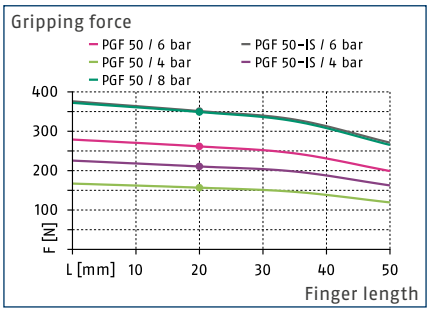

Finger load

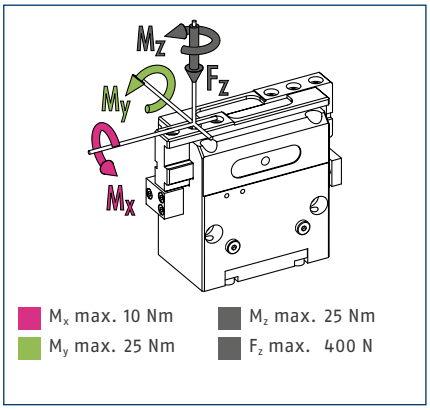

ⓘ The indicated moments and forces are static values, apply per base jaw and may occur simultaneously. M_y may arise in addition to the moment generated by the gripping force itself. If the max. permitted finger weight is exceeded, it is impreative to throttle the air supply so that the jaw movement occurs without any hitting or bouncing. Service life may be reduced.

Technical data

Description		PGF 50	PGF 50-AS	PGF 50-IS
ID		0340360	0340361	0340362
Stroke per jaw	[mm]	7.5	7.5	7.5
Closing- / opening force	[N]	240/260	340/-	-/360
min. spring force	[N]		100	100
Weight	[kg]	0.3	0.35	0.35
Recommended workpiece weight	[kg]	1.2	1.2	1.2
Fluid consumption per double stroke	[cm³]	14	14	14
min. / max. operating pressure	[bar]	3.5/8	4/6.5	4/6.5
Nominal operating pressure	[bar]	6	6	6
Closing- / opening time	[s]	0.03/0.03	0.03/0.07	0.07/0.03
Closing- / opening time only with spring	[s]		0.50	0.50
max. permitted finger length	[mm]	50	50	50
max. permitted weight per finger	[kg]	0.25	0.25	0.25
IP class		40	40	40
min. / max. ambient temperature	[°C]	5/90	5/90	5/90
Repeat accuracy	[mm]	0.02	0.02	0.02

Main view

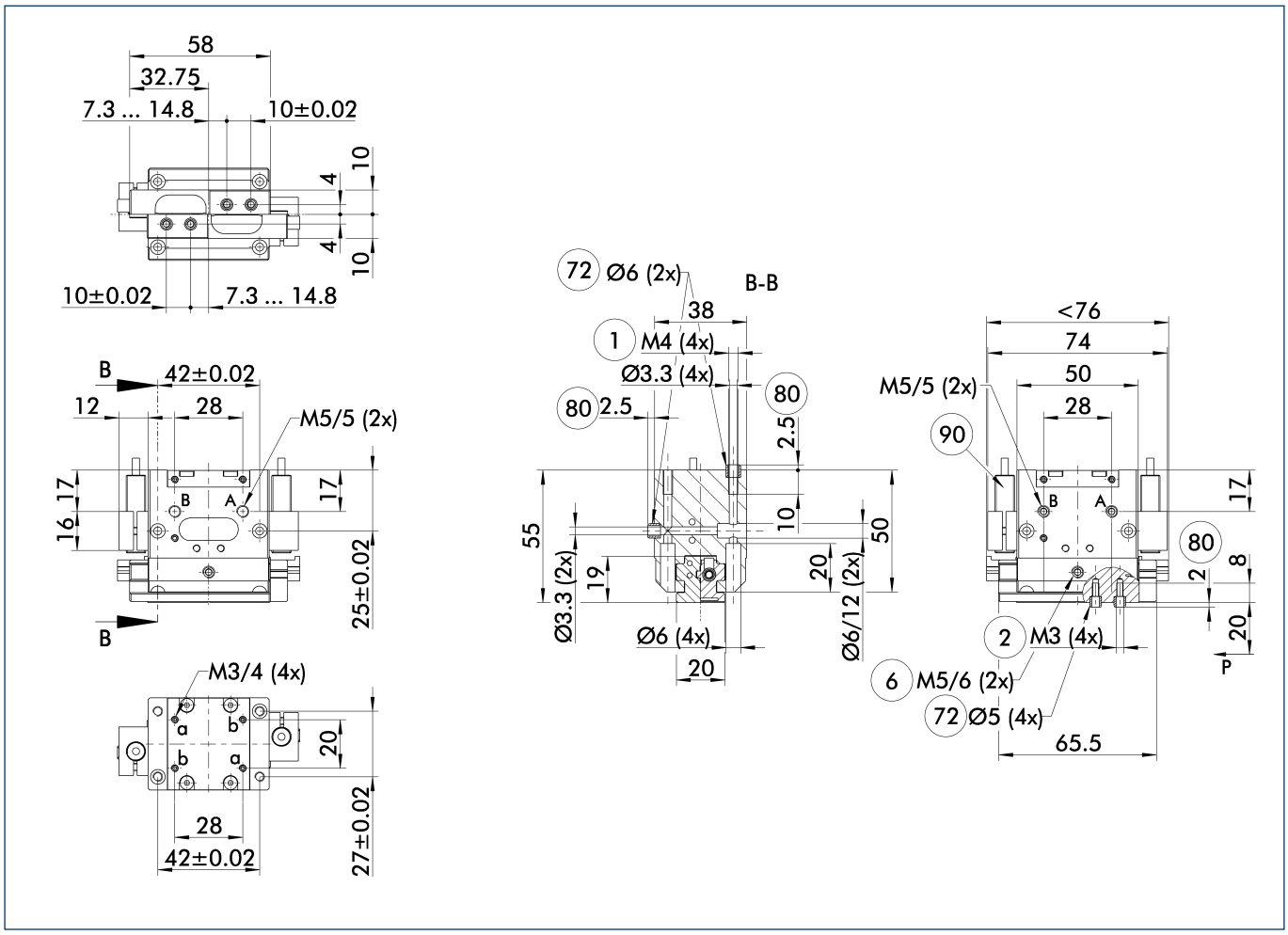

The drawing shows the gripper in the basic version with closed jaws, without dimensional consideration of the options described below.

ⓘ The SDV-P pressure maintenance valve can also be used for I.D. or O.D. gripping alternatively or in addition to the spring-loaded, mechanical gripping force maintenance device (see catalog section on "Accessories").

A, a Main / direct connection, gripper opening

B, b Main / direct connection, gripper closing

(1) Gripper connection

(2) Finger connection

(6) Lubricating nipple connection

(72) Fit for centering sleeves

(80) Depth of the centering sleeve hole in the mating part

(90) IN ... sensor

Maximum permitted finger projection

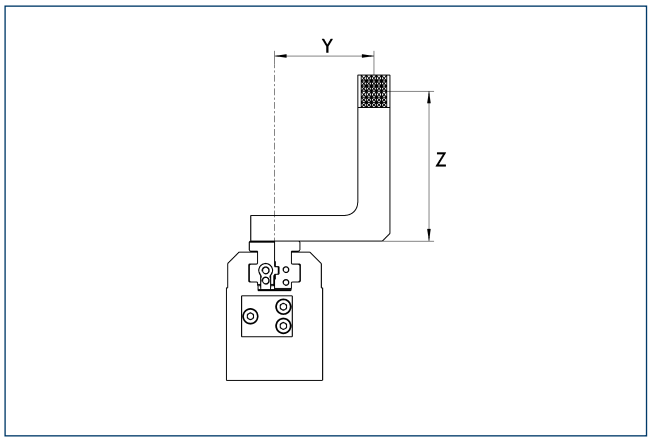

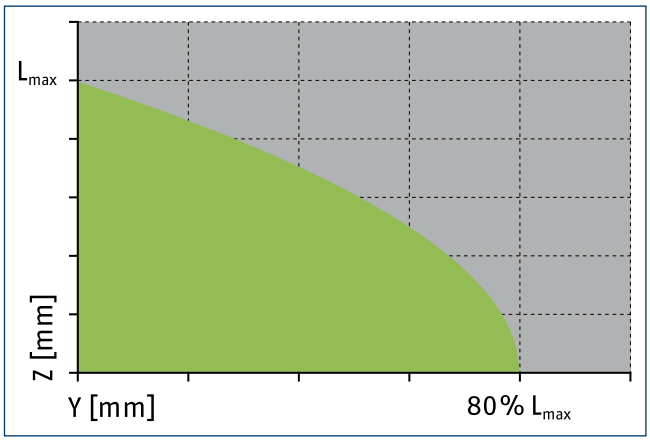

Permitted range

Inadmissible range

L_{max} is equivalent to the maximum permitted finger length, see the chart of technical specifications.

Hose-free direct connection M3

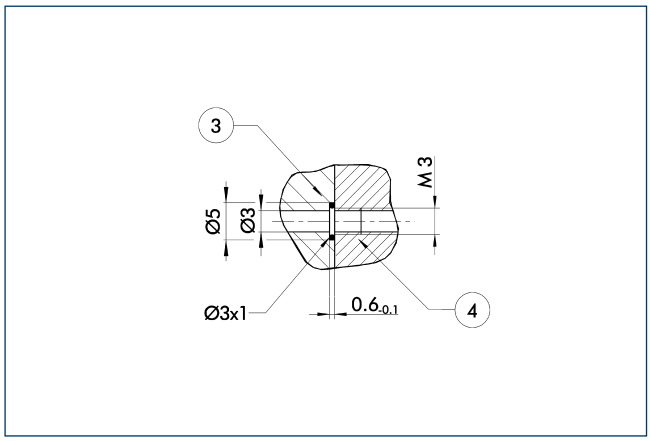

3 Adapter

4 Gripper

The direct connection is used for supplying compressed air without hoses. Instead, the pressure medium is fed through bore-holes in the mounting plate.

SDV-P pressure maintenance valve

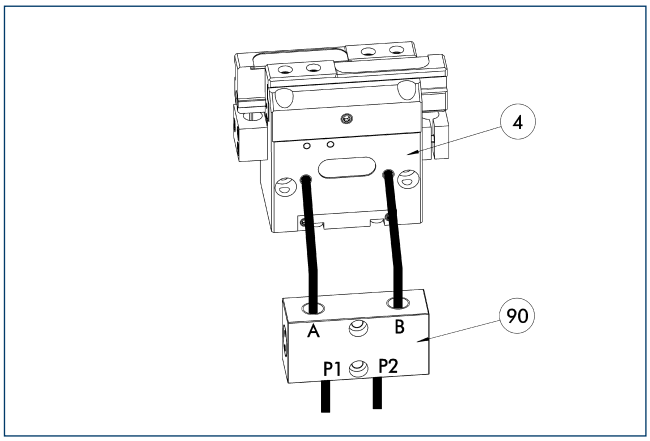

4 Gripper

90 SDV-P pressure maintenance valve

The SDV-P pressure maintenance valves ensure that the pressure in the piston chamber of pneumatic gripping, rotary, linear, and quick-change modules is maintained temporarily during an emergency stop.

Description	ID	
Pressure maintenance valve		
SDV-P 04	0403130	

Inductive proximity switches

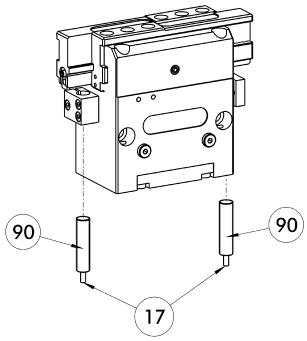

(17) Cable outlet (90) IN ... sensor

Directly mounted limit position monitor.

Description	ID	Often combined
Inductive proximity switches		
IN 80-S-M12	0301578	
IN 80-S-M8	0301478	●
IN-C 80-S-M8	0301475	
INK 80-S	0301550	
Cable extensions		
KV BG12-SG12 3P-0030-PNP	0301999	
KV BG12-SG12 3P-0060-PNP	0301998	
KV BW08-SG08 3P-0030-PNP	0301495	
KV BW08-SG08 3P-0100-PNP	0301496	
KV BW08-SG08 3P-0200-PNP	0301497	●
KV BW12-SG12 3P-0030-PNP	0301595	
KV BW12-SG12 3P-0100-PNP	0301596	
KV BW12-SG12 3P-0200-PNP	0301597	
Clip for plug / socket		
CLI-M12	0301464	
CLI-M8	0301463	
Connection cables		
KA BG08-L 3P-0300-PNP	0301622	●
KA BG08-L 3P-0500-PNP	0301623	
KA BG12-L 3P-0500-PNP	30016369	
KA BW08-L 3P-0300-PNP	0301594	
KA BW08-L 3P-0500-PNP	0301502	
KA BW12-L 3P-0300-PNP	0301503	
KA BW12-L 3P-0500-PNP	0301507	
Sensor distributor		
V2-M8	0301775	●
V2-M12	0301776	●
V4-M12	0301747	
V4-M8	0301746	
V8-M12	0301752	
V8-M8	0301751	

ⓘ Two sensors (closer/S) are required for each unit, plus extension cables as an option. Please note the minimum permitted bending radii for the sensor cables, which are generally 35 mm.

Mounting kit for FPS

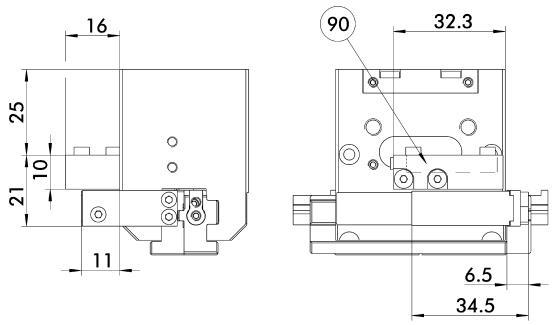

(90) FPS-S 13 sensor

The following FPS position sensor can differentiate between five programmable areas and/or switching points for the stroke of a gripper, and can be used in combination with a PC as a measuring system.

Description	ID	
Mounting kit for FPS		
AS-FPS-PGF 50	0302731	

ⓘ This mounting kit needs to be ordered optionally as an accessory.

Flexible position sensor

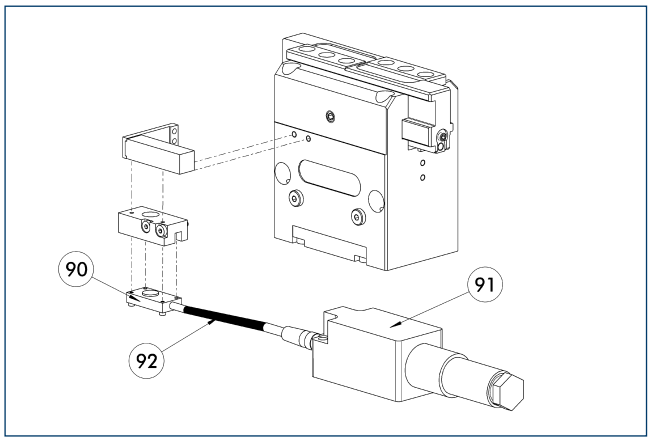

90 FPS-S sensor
91 FPS-F5 / -F5 T electronic processor
92 Cable extensions

Flexible position monitoring of up to five positions.

Description	ID	Often combined
Mounting kit for FPS		
AS-FPS-PGF 50	0302731	
Electronic processor		
FPS-F5 T	0301807	
FPS-F5	0301805	●
Sensor		
FPS-S 13	0301705	

ⓘ When using a FPS system, a FPS sensor (FPS-S) and a control unit (FPS-F5 / F5 T) are required for each gripper as well as a mounting kit (AS), if listed. Cable extensions (KV) are available as options in the "Accessories" catalog section.

PGF 64

SCHUNK Grippers pneumatic | 2-Finger Parallel Grippers | Universal Gripper

Gripping force, O.D. gripping

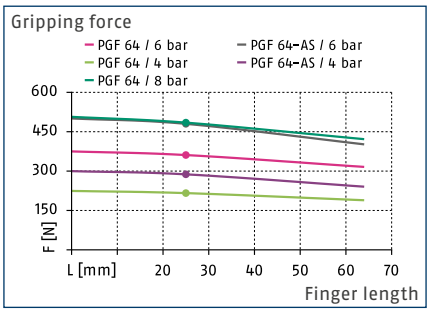

Gripping force, I.D. gripping

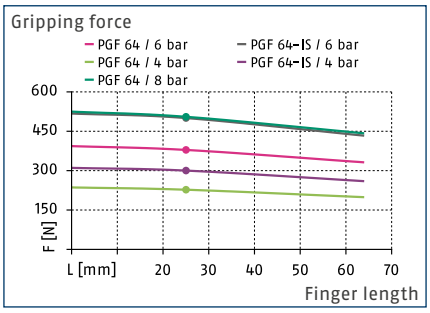

Finger load

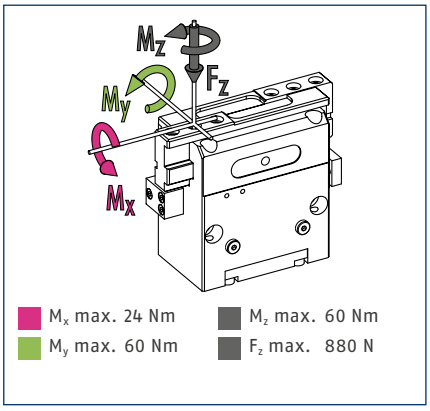

ⓘ The indicated moments and forces are static values, apply per base jaw and may occur simultaneously. M_y may arise in addition to the moment generated by the gripping force itself. If the max. permitted finger weight is exceeded, it is impreative to throttle the air supply so that the jaw movement occurs without any hitting or bouncing. Service life may be reduced.

Technical data

Description		PGF 64	PGF 64-AS	PGF 64-IS
ID		0340365	0340366	0340367
Stroke per jaw	[mm]	11.5	11.5	11.5
Closing- / opening force	[N]	360/380	480/-	-/500
min. spring force	[N]		120	120
Weight	[kg]	0.6	0.7	0.7
Recommended workpiece weight	[kg]	1.8	1.8	1.8
Fluid consumption per double stroke	[cm³]	30	30	30
min. / max. operating pressure	[bar]	3.5/8	4/6.5	4/6.5
Nominal operating pressure	[bar]	6	6	6
Closing- / opening time	[s]	0.06/0.06	0.05/0.1	0.1/0.05
Closing- / opening time only with spring	[s]		0.50	0.50
max. permitted finger length	[mm]	64	64	64
max. permitted weight per finger	[kg]	0.4	0.4	0.4
IP class		40	40	40
min. / max. ambient temperature	[°C]	5/90	5/90	5/90
Repeat accuracy	[mm]	0.02	0.02	0.02

Main view

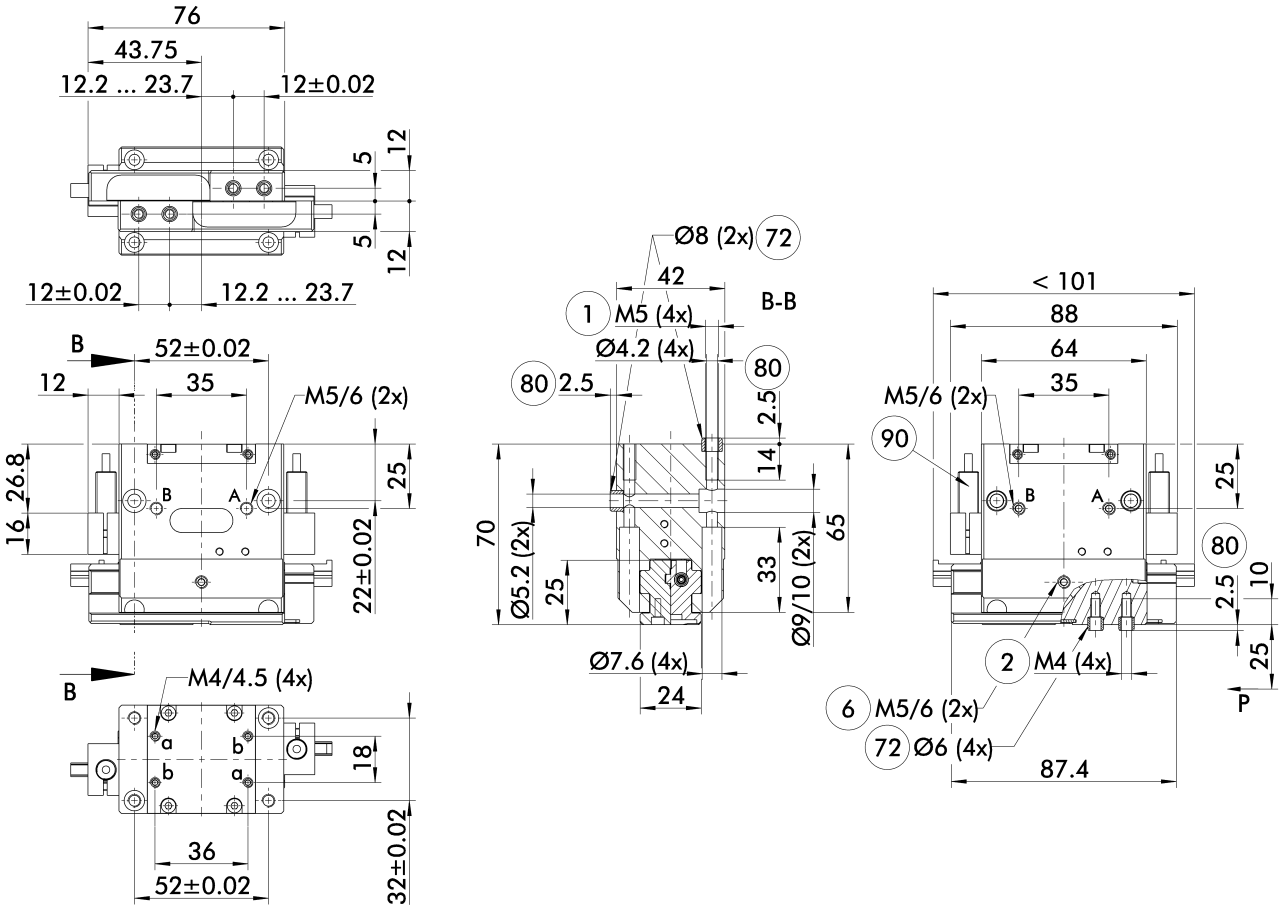

The drawing shows the gripper in the basic version with closed jaws, without dimensional consideration of the options described below.

ⓘ The SDV-P pressure maintenance valve can also be used for I.D. or O.D. gripping alternatively or in addition to the spring-loaded, mechanical gripping force maintenance device (see catalog section on "Accessories").

A, a Main / direct connection, gripper opening

B, b Main / direct connection, gripper closing

1 Gripper connection

2 Finger connection

6 Lubricating nipple connection

72 Fit for centering sleeves

80 Depth of the centering sleeve hole in the mating part

90 IN ... sensor

Maximum permitted finger projection

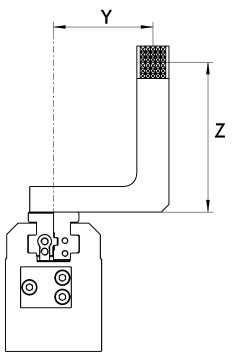

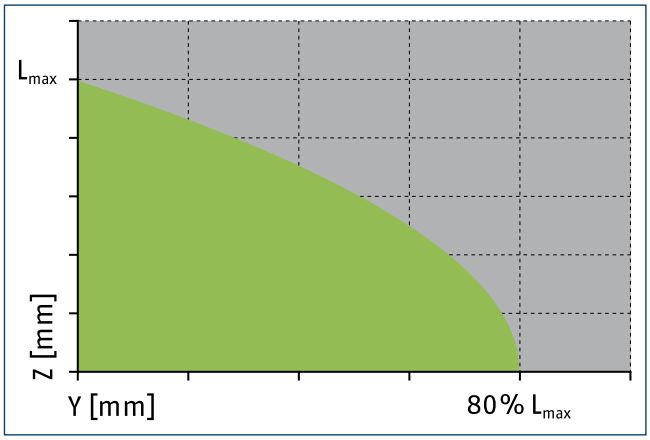

Permitted range

Inadmissible range

L_{max} is equivalent to the maximum permitted finger length, see the chart of technical specifications.

Hose-free direct connection M4

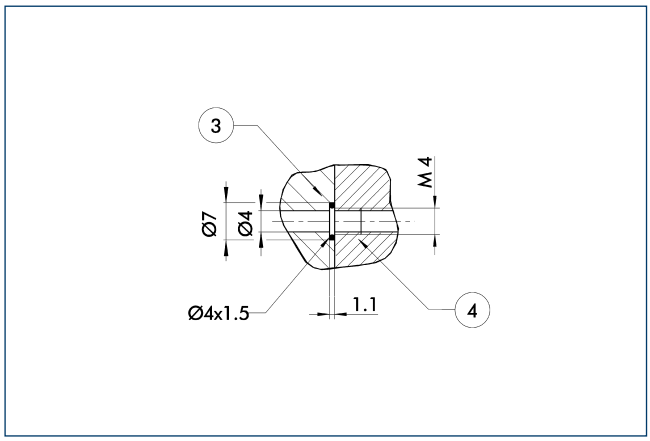

3 Adapter

4 Gripper

The direct connection is used for supplying compressed air without hoses. Instead, the pressure medium is fed through bore-holes in the mounting plate.

SDV-P pressure maintenance valve

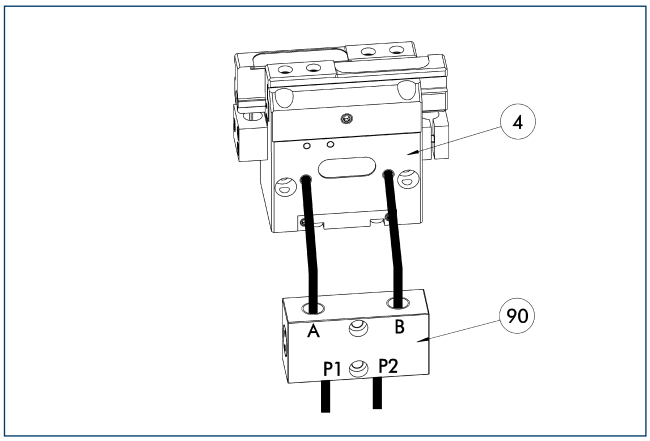

4 Gripper

90 SDV-P pressure maintenance valve

The SDV-P pressure maintenance valves ensure that the pressure in the piston chamber of pneumatic gripping, rotary, linear, and quick-change modules is maintained temporarily during an emergency stop.

Description	ID	
Pressure maintenance valve		
SDV-P 04	0403130	

Inductive proximity switches

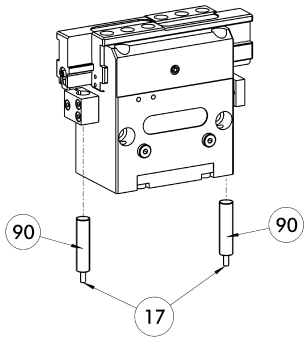

17 Cable outlet
90 IN ... sensor

Directly mounted limit position monitor.

Description	ID	Often combined
Inductive proximity switches		
IN 80-S-M12	0301578	
IN 80-S-M8	0301478	●
IN-C 80-S-M8	0301475	
INK 80-S	0301550	
Cable extensions		
KV BG12-SG12 3P-0030-PNP	0301999	
KV BG12-SG12 3P-0060-PNP	0301998	
KV BW08-SG08 3P-0030-PNP	0301495	
KV BW08-SG08 3P-0100-PNP	0301496	
KV BW08-SG08 3P-0200-PNP	0301497	●
KV BW12-SG12 3P-0030-PNP	0301595	
KV BW12-SG12 3P-0100-PNP	0301596	
KV BW12-SG12 3P-0200-PNP	0301597	
Clip for plug / socket		
CLI-M12	0301464	
CLI-M8	0301463	
Connection cables		
KA BG08-L 3P-0300-PNP	0301622	●
KA BG08-L 3P-0500-PNP	0301623	
KA BG12-L 3P-0500-PNP	30016369	
KA BW08-L 3P-0300-PNP	0301594	
KA BW08-L 3P-0500-PNP	0301502	
KA BW12-L 3P-0300-PNP	0301503	
KA BW12-L 3P-0500-PNP	0301507	
Sensor distributor		
V2-M8	0301775	●
V2-M12	0301776	●
V4-M12	0301747	
V4-M8	0301746	
V8-M12	0301752	
V8-M8	0301751	

ⓘ Two sensors (closer/S) are required for each unit, plus extension cables as an option. Please note the minimum permitted bending radii for the sensor cables, which are generally 35 mm.

Mounting kit for proximity switch

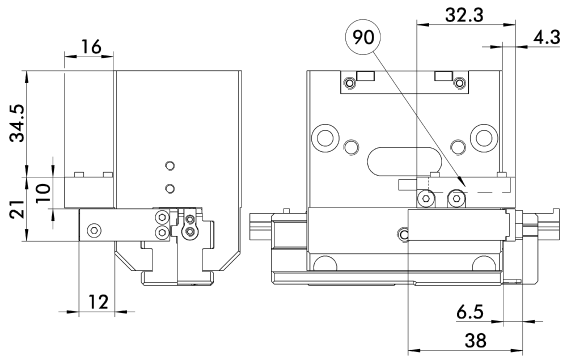

90 FPS-S 13 sensor

The following FPS position sensor can differentiate between five programmable areas and/or switching points for the stroke of a gripper, and can be used in combination with a PC as a measuring system.

Description	ID	
Mounting kit for FPS		
AS-FPS-PGF 64	0302732	

ⓘ This mounting kit needs to be ordered optionally as an accessory.

Flexible position sensor

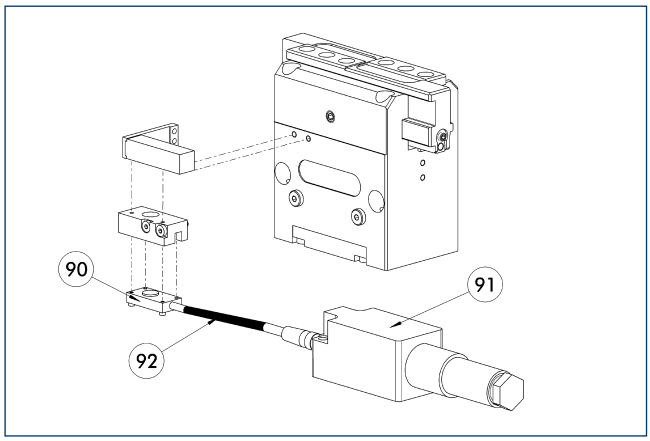

90 FPS-S sensor
91 FPS-F5 / -F5 T electronic processor
92 Cable extensions

Flexible position monitoring of up to five positions.

Description	ID	Often combined
Mounting kit for FPS		
AS-FPS-PGF 64	0302732	
Electronic processor		
FPS-F5 T	0301807	
FPS-F5	0301805	●
Sensor		
FPS-S 13	0301705	

ⓘ When using a FPS system, a FPS sensor (FPS-S) and a control unit (FPS-F5 / F5 T) are required for each gripper as well as a mounting kit (AS), if listed. Cable extensions (KV) are available as options in the "Accessories" catalog section.

PGF 80

SCHUNK Grippers pneumatic | 2-Finger Parallel Grippers | Universal Gripper

Gripping force, O.D. gripping

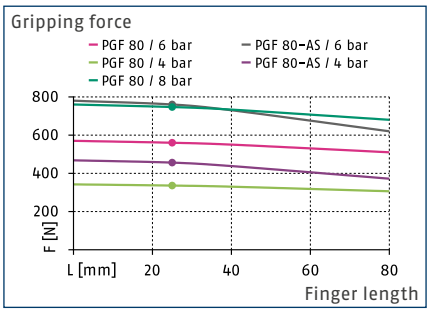

Gripping force, I.D. gripping

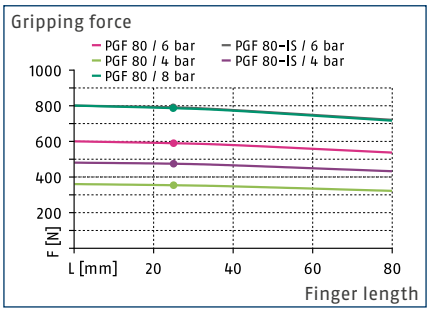

Finger load

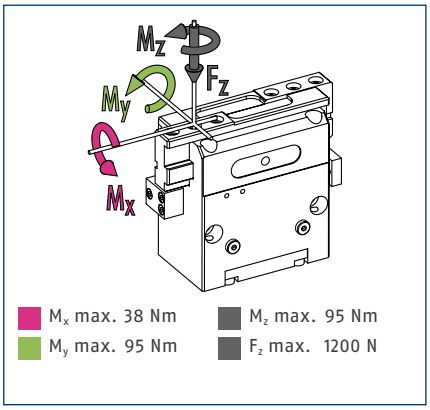

ⓘ The indicated moments and forces are static values, apply per base jaw and may occur simultaneously. M_y may arise in addition to the moment generated by the gripping force itself. If the max. permitted finger weight is exceeded, it is impreative to throttle the air supply so that the jaw movement occurs without any hitting or bouncing. Service life may be reduced.

Technical data

Description		PGF 80	PGF 80-AS	PGF 80-IS
ID		0340370	0340371	0340372
Stroke per jaw	[mm]	16.5	16.5	16.5
Closing- / opening force	[N]	560/590	760/-	-/790
min. spring force	[N]		200	200
Weight	[kg]	1.15	1.25	1.25
Recommended workpiece weight	[kg]	2.8	2.8	2.8
Fluid consumption per double stroke	[cm³]	77	77	77
min. / max. operating pressure	[bar]	3.5/8	4/6.5	4/6.5
Nominal operating pressure	[bar]	6	6	6
Closing- / opening time	[s]	0.1/0.1	0.08/0.14	0.14/0.08
Closing- / opening time only with spring	[s]		0.60	0.60
max. permitted finger length	[mm]	80	80	80
max. permitted weight per finger	[kg]	0.75	0.75	0.75
IP class		40	40	40
min. / max. ambient temperature	[°C]	5/90	5/90	5/90
Repeat accuracy	[mm]	0.02	0.02	0.02

Main view

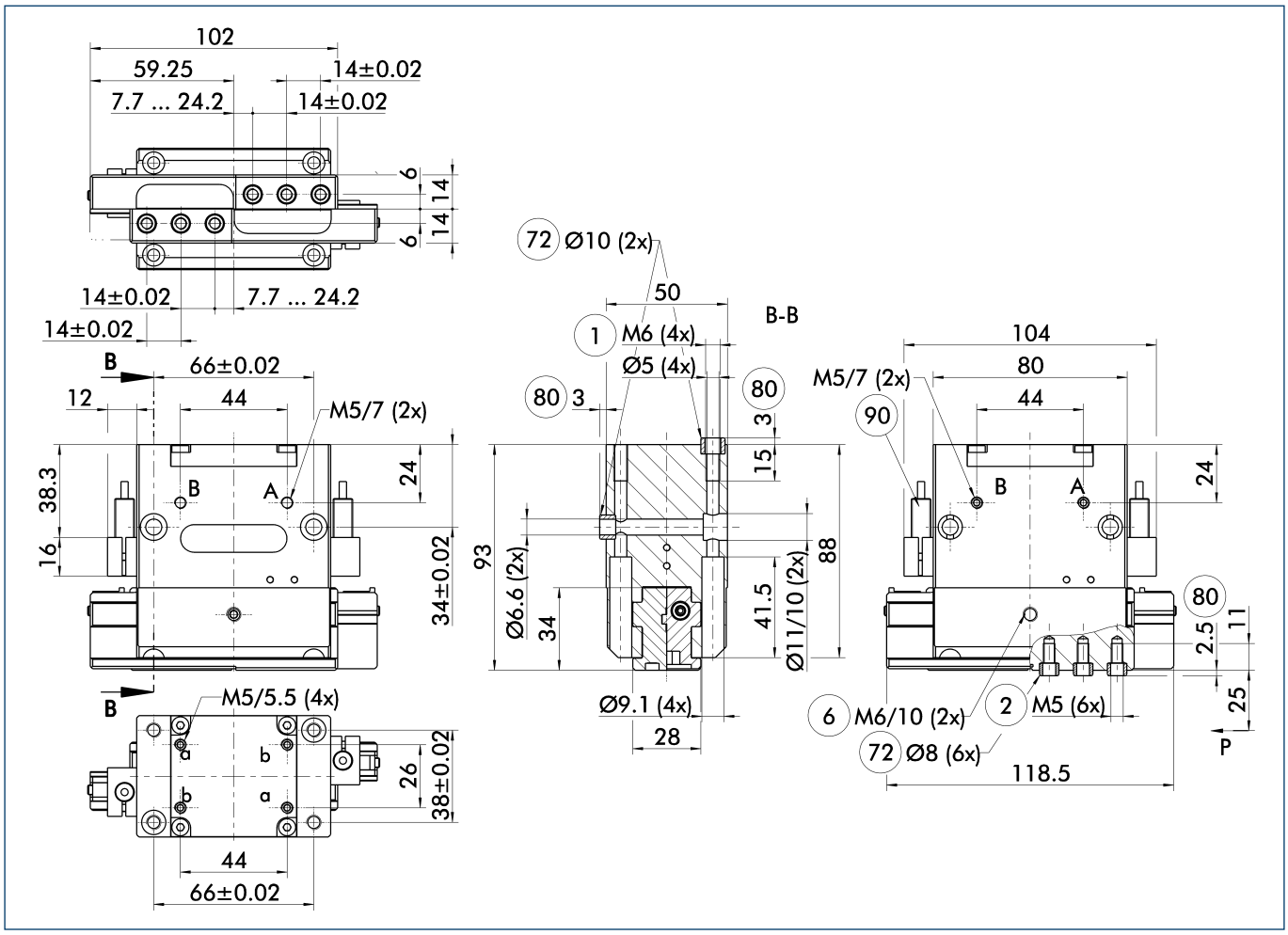

The drawing shows the gripper in the basic version with closed jaws, without dimensional consideration of the options described below.

ⓘ The SDV-P pressure maintenance valve can also be used for I.D. or O.D. gripping alternatively or in addition to the spring-loaded, mechanical gripping force maintenance device (see catalog section on "Accessories").

A, a Main / direct connection, gripper opening

B, b Main / direct connection, gripper closing

(1) Gripper connection

(2) Finger connection

(6) Lubricating nipple connection

(72) Fit for centering sleeves

(80) Depth of the centering sleeve hole in the mating part

(90) IN ... sensor

Maximum permitted finger projection

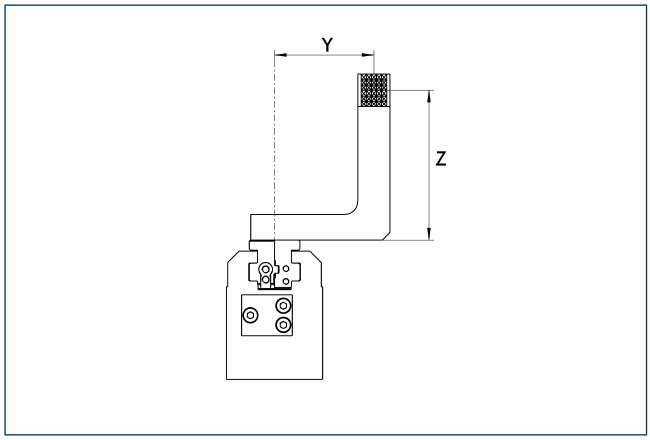

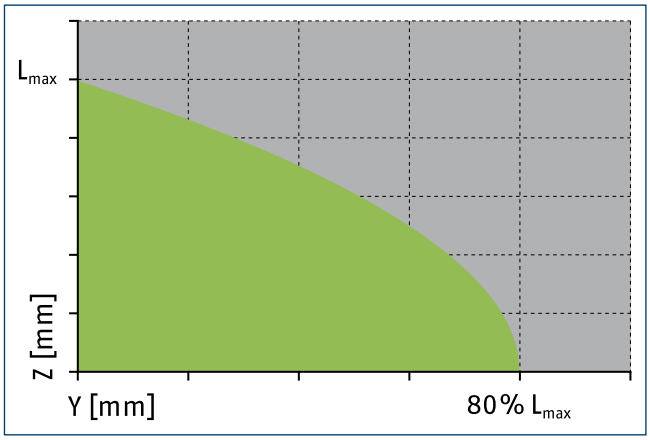

Permitted range

Inadmissible range

L_{max} is equivalent to the maximum permitted finger length, see the chart of technical specifications.

Hose-free direct connection M5

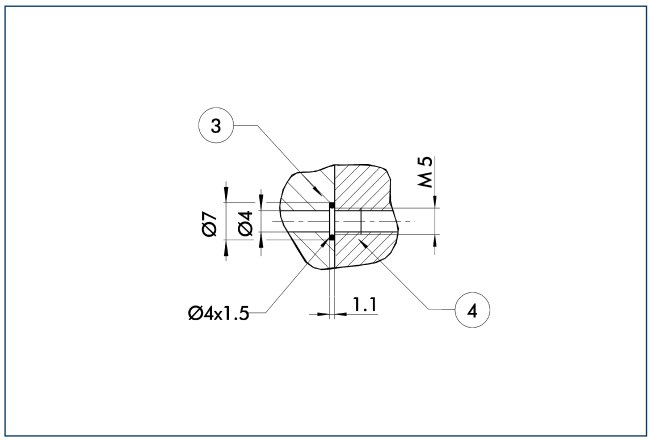

3 Adapter

4 Gripper

The direct connection is used for supplying compressed air without hoses. Instead, the pressure medium is fed through bore-holes in the mounting plate.

SDV-P pressure maintenance valve

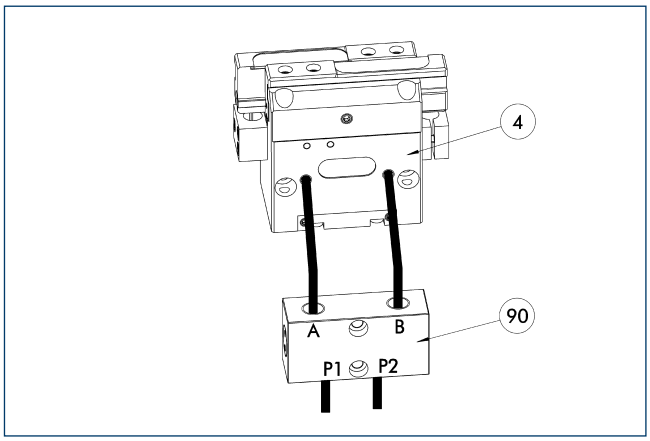

4 Gripper

90 SDV-P pressure maintenance valve

The SDV-P pressure maintenance valves ensure that the pressure in the piston chamber of pneumatic gripping, rotary, linear, and quick-change modules is maintained temporarily during an emergency stop.

Description	ID	
Pressure maintenance valve		
SDV-P 04	0403130	

Inductive proximity switches

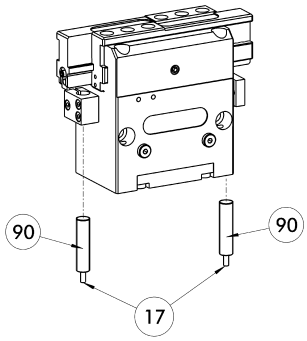

(17) Cable outlet (90) IN ... sensor

Directly mounted limit position monitor.

Description	ID	Often combined
Inductive proximity switches		
IN 80-S-M12	0301578	
IN 80-S-M8	0301478	●
IN-C 80-S-M8	0301475	
INK 80-S	0301550	
Cable extensions		
KV BG12-SG12 3P-0030-PNP	0301999	
KV BG12-SG12 3P-0060-PNP	0301998	
KV BW08-SG08 3P-0030-PNP	0301495	
KV BW08-SG08 3P-0100-PNP	0301496	
KV BW08-SG08 3P-0200-PNP	0301497	●
KV BW12-SG12 3P-0030-PNP	0301595	
KV BW12-SG12 3P-0100-PNP	0301596	
KV BW12-SG12 3P-0200-PNP	0301597	
Clip for plug / socket		
CLI-M12	0301464	
CLI-M8	0301463	
Connection cables		
KA BG08-L 3P-0300-PNP	0301622	●
KA BG08-L 3P-0500-PNP	0301623	
KA BG12-L 3P-0500-PNP	30016369	
KA BW08-L 3P-0300-PNP	0301594	
KA BW08-L 3P-0500-PNP	0301502	
KA BW12-L 3P-0300-PNP	0301503	
KA BW12-L 3P-0500-PNP	0301507	
Sensor distributor		
V2-M8	0301775	●
V2-M12	0301776	●
V4-M12	0301747	
V4-M8	0301746	
V8-M12	0301752	
V8-M8	0301751	

ⓘ Two sensors (closer/S) are required for each unit, plus extension cables as an option. Please note the minimum permitted bending radii for the sensor cables, which are generally 35 mm.

Mounting kit for FPS

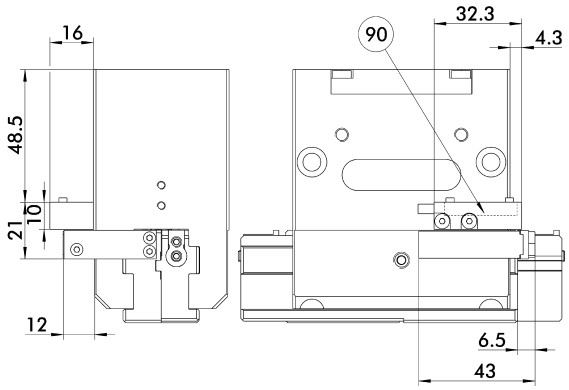

(90) FPS-S 13 sensor

The following FPS position sensor can differentiate between five programmable areas and/or switching points for the stroke of a gripper, and can be used in combination with a PC as a measuring system.

Description	ID	
Mounting kit for FPS		
AS-FPS-PGF 80	0302733	

ⓘ This mounting kit needs to be ordered optionally as an accessory.

Flexible position sensor

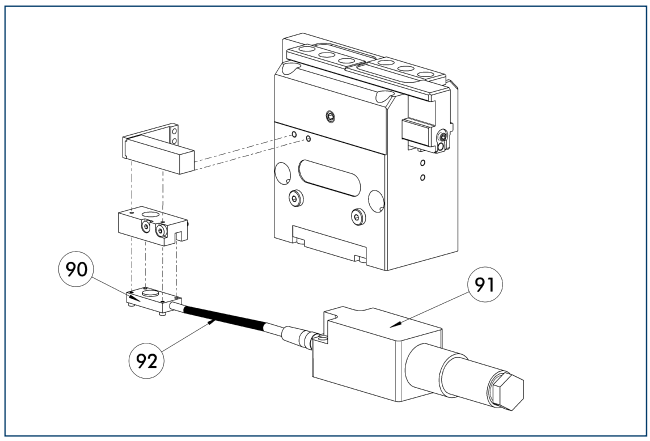

90 FPS-S sensor
91 FPS-F5 / -F5 T electronic processor
92 Cable extensions

Flexible position monitoring of up to five positions.

Description	ID	Often combined
Mounting kit for FPS		
AS-FPS-PGF 80	0302733	
Electronic processor		
FPS-F5 T	0301807	
FPS-F5	0301805	●
Sensor		
FPS-S 13	0301705	

ⓘ When using a FPS system, a FPS sensor (FPS-S) and a control unit (FPS-F5 / F5 T) are required for each gripper as well as a mounting kit (AS), if listed. Cable extensions (KV) are available as options in the "Accessories" catalog section.

PGF 100

SCHUNK Grippers pneumatic | 2-Finger Parallel Grippers | Universal Gripper

Gripping force, O.D. gripping

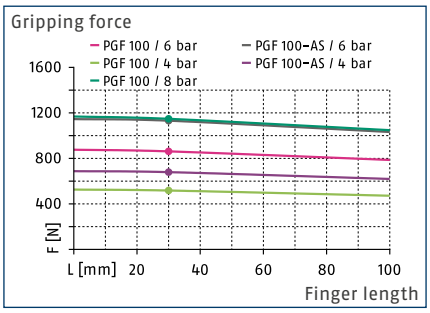

Gripping force, I.D. gripping

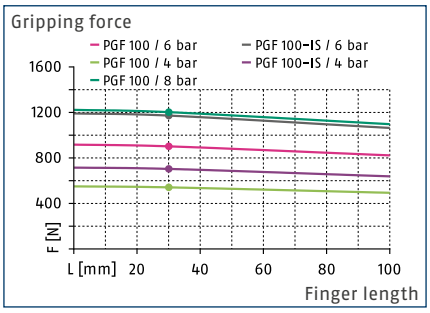

Finger load

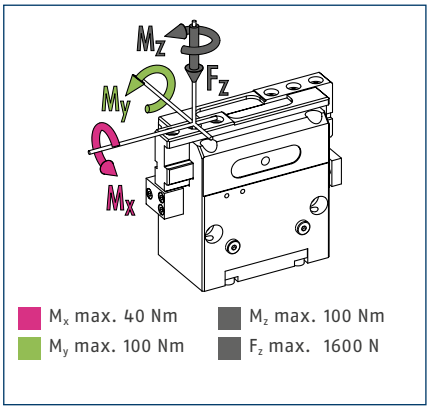

ⓘ The indicated moments and forces are static values, apply per base jaw and may occur simultaneously. M_y may arise in addition to the moment generated by the gripping force itself. If the max. permitted finger weight is exceeded, it is impreative to throttle the air supply so that the jaw movement occurs without any hitting or bouncing. Service life may be reduced.

Technical data

Description		PGF 100	PGF 100-AS	PGF 100-IS
ID		0340380	0340381	0340382
Stroke per jaw	[mm]	23.5	23.5	23.5
Closing- / opening force	[N]	880/900	1150/-	-/1170
min. spring force	[N]		270	270
Weight	[kg]	2.35	2.85	2.85
Recommended workpiece weight	[kg]	4.4	4.4	4.4
Fluid consumption per double stroke	[cm³]	154	154	154
min. / max. operating pressure	[bar]	3.5/8	4/6.5	4/6.5
Nominal operating pressure	[bar]	6	6	6
Closing- / opening time	[s]	0.15/0.15	0.16/0.25	0.25/0.16
Closing- / opening time only with spring	[s]		0.70	0.70
max. permitted finger length	[mm]	100	100	100
max. permitted weight per finger	[kg]	1.4	1.4	1.4
IP class		40	40	40
min. / max. ambient temperature	[°C]	5/90	5/90	5/90
Repeat accuracy	[mm]	0.03	0.03	0.03

Main view

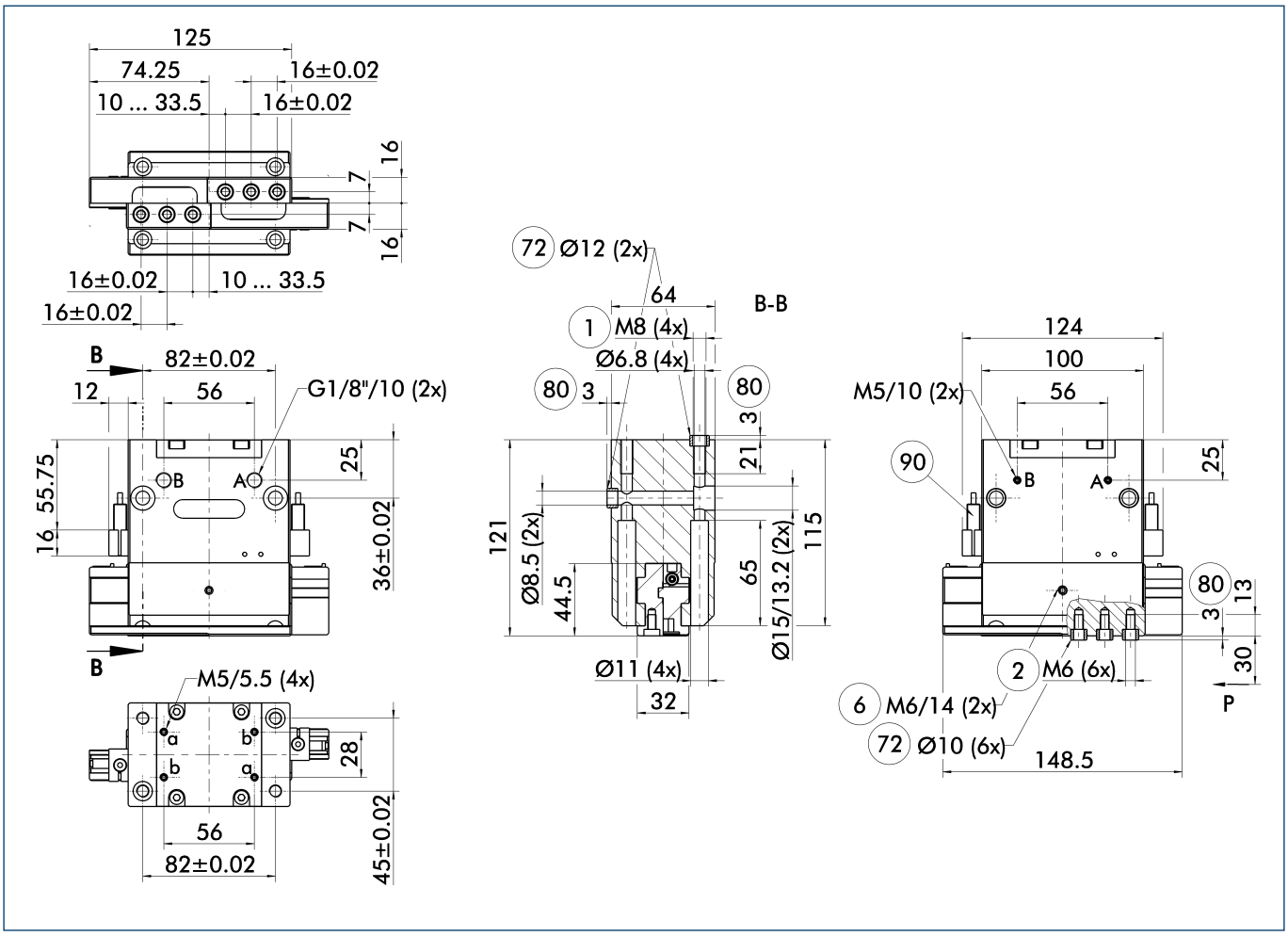

The drawing shows the gripper in the basic version with closed jaws, without dimensional consideration of the options described below.

ⓘ The SDV-P pressure maintenance valve can also be used for I.D. or O.D. gripping alternatively or in addition to the spring-loaded, mechanical gripping force maintenance device (see catalog section on "Accessories").

A, a Main / direct connection, gripper opening

B, b Main / direct connection, gripper closing

(1) Gripper connection

(2) Finger connection

(6) Lubricating nipple connection

(72) Fit for centering sleeves

(80) Depth of the centering sleeve hole in the mating part

(90) IN ... sensor

Maximum permitted finger projection

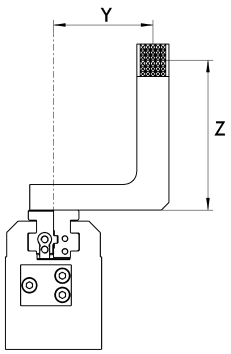

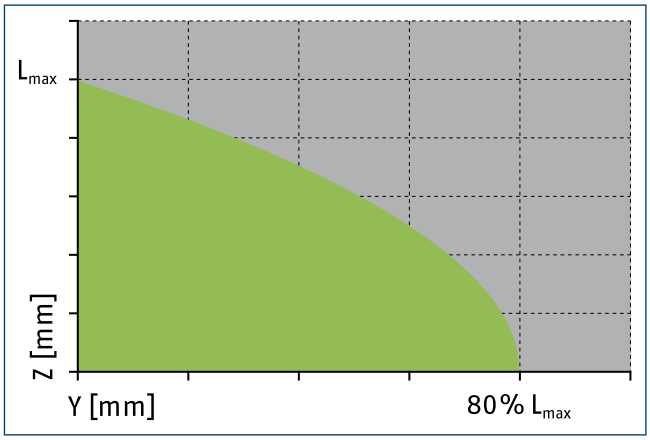

Permitted range

Inadmissible range

L_{max} is equivalent to the maximum permitted finger length, see the chart of technical specifications.

Hose-free direct connection M5

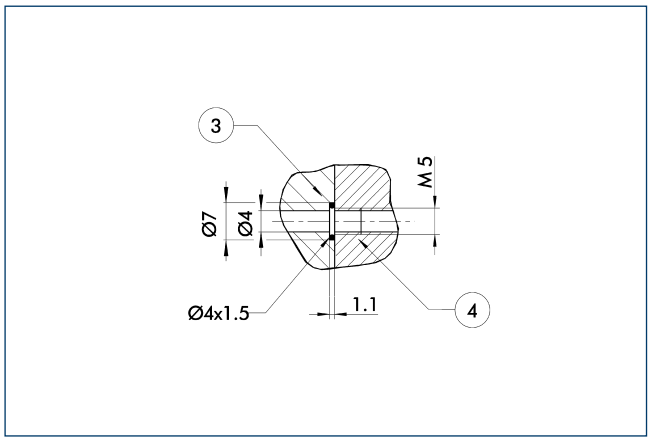

3 Adapter

4 Gripper

The direct connection is used for supplying compressed air without hoses. Instead, the pressure medium is fed through bore-holes in the mounting plate.

SDV-P pressure maintenance valve

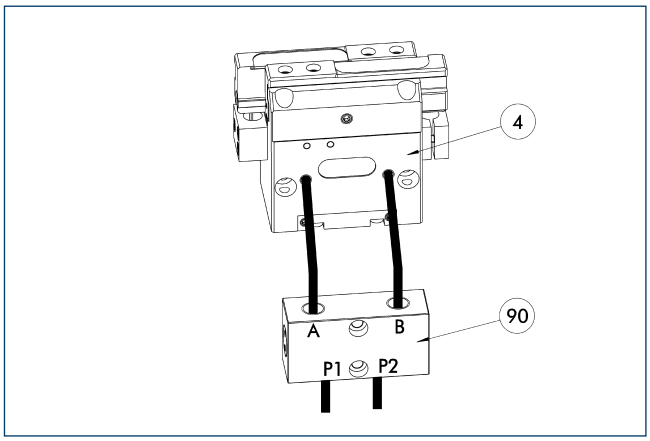

4 Gripper

90 SDV-P pressure maintenance valve

The SDV-P pressure maintenance valves ensure that the pressure in the piston chamber of pneumatic gripping, rotary, linear, and quick-change modules is maintained temporarily during an emergency stop.

Description	ID	
Pressure maintenance valve		
SDV-P 04	0403130	

Inductive proximity switches

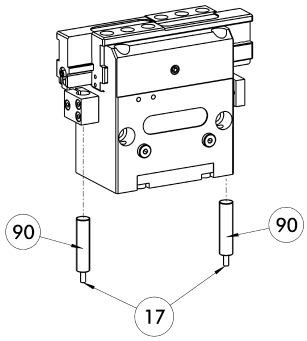

(17) Cable outlet (90) IN ... sensor

Directly mounted limit position monitor.

Description	ID	Often combined
Inductive proximity switches		
IN 80-S-M12	0301578	
IN 80-S-M8	0301478	●
IN-C 80-S-M8	0301475	
INK 80-S	0301550	
Cable extensions		
KV BG12-SG12 3P-0030-PNP	0301999	
KV BG12-SG12 3P-0060-PNP	0301998	
KV BW08-SG08 3P-0030-PNP	0301495	
KV BW08-SG08 3P-0100-PNP	0301496	
KV BW08-SG08 3P-0200-PNP	0301497	●
KV BW12-SG12 3P-0030-PNP	0301595	
KV BW12-SG12 3P-0100-PNP	0301596	
KV BW12-SG12 3P-0200-PNP	0301597	
Clip for plug / socket		
CLI-M12	0301464	
CLI-M8	0301463	
Connection cables		
KA BG08-L 3P-0300-PNP	0301622	●
KA BG08-L 3P-0500-PNP	0301623	
KA BG12-L 3P-0500-PNP	30016369	
KA BW08-L 3P-0300-PNP	0301594	
KA BW08-L 3P-0500-PNP	0301502	
KA BW12-L 3P-0300-PNP	0301503	
KA BW12-L 3P-0500-PNP	0301507	
Sensor distributor		
V2-M8	0301775	●
V2-M12	0301776	●
V4-M12	0301747	
V4-M8	0301746	
V8-M12	0301752	
V8-M8	0301751	

ⓘ Two sensors (closer/S) are required for each unit, plus extension cables as an option. Please note the minimum permitted bending radii for the sensor cables, which are generally 35 mm.

Mounting kit for FPS

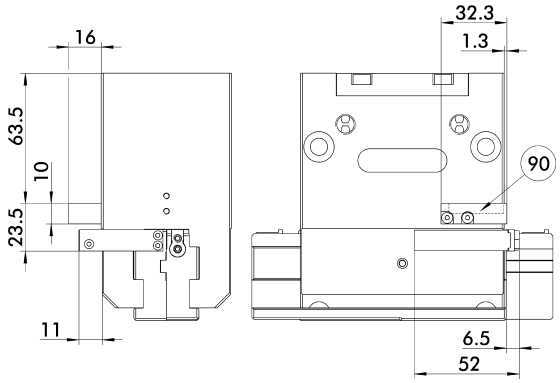

(90) FPS-S 13 sensor

The following FPS position sensor can differentiate between five programmable areas and/or switching points for the stroke of a gripper, and can be used in combination with a PC as a measuring system.

Description	ID	
Mounting kit for FPS		
AS-FPS-PGF 100	0302734	

ⓘ This mounting kit needs to be ordered optionally as an accessory.

Flexible position sensor

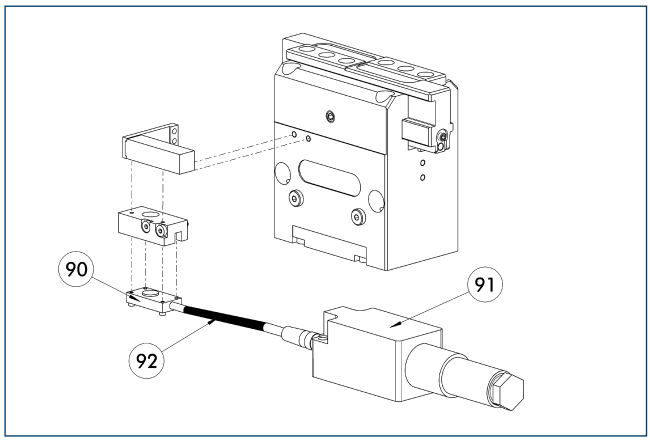

90 FPS-S sensor
91 FPS-F5 / -F5 T electronic processor
92 Cable extensions

Flexible position monitoring of up to five positions.

Description	ID	Often combined
Mounting kit for FPS		
AS-FPS-PGF 100	0302734	
Electronic processor		
FPS-F5 T	0301807	
FPS-F5	0301805	●
Sensor		
FPS-S 13	0301705	

ⓘ When using a FPS system, a FPS sensor (FPS-S) and a control unit (FPS-F5 / F5 T) are required for each gripper as well as a mounting kit (AS), if listed. Cable extensions (KV) are available as options in the "Accessories" catalog section.

PGF 125

SCHUNK Grippers pneumatic | 2-Finger Parallel Grippers | Universal Gripper

Gripping force, O.D. gripping

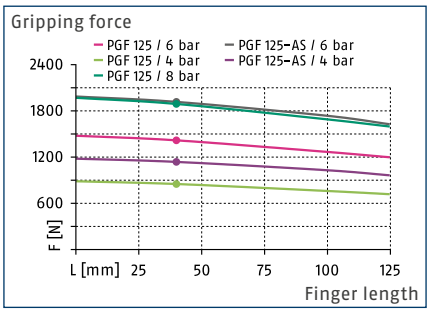

Gripping force, I.D. gripping

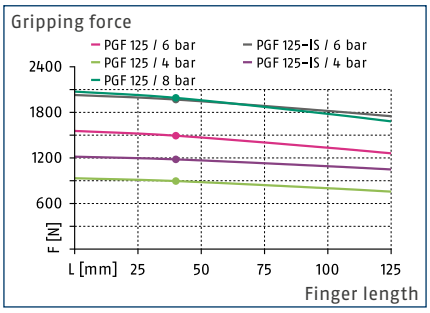

Finger load

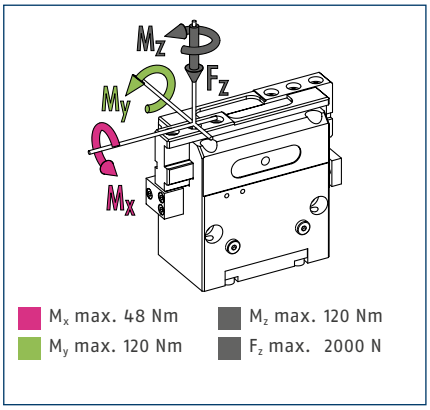

ⓘ The indicated moments and forces are static values, apply per base jaw and may occur simultaneously. M_y may arise in addition to the moment generated by the gripping force itself. If the max. permitted finger weight is exceeded, it is impreative to throttle the air supply so that the jaw movement occurs without any hitting or bouncing. Service life may be reduced.

Technical data

Description		PGF 125	PGF 125-AS	PGF 125-IS
ID		0340390	0340391	0340392
Stroke per jaw	[mm]	31.5	31.5	31.5
Closing- / opening force	[N]	1420/1490	1900/-	-/1970
min. spring force	[N]		480	480
Weight	[kg]	5	5.3	5.3
Recommended workpiece weight	[kg]	7.1	7.1	7.1
Fluid consumption per double stroke	[cm³]	300	300	300
min. / max. operating pressure	[bar]	3.5/8	4/6.5	4/6.5
Nominal operating pressure	[bar]	6	6	6
Closing- / opening time	[s]	0.25/0.25	0.22/0.4	0.4/0.22
Closing- / opening time only with spring	[s]		0.80	0.80
max. permitted finger length	[mm]	125	125	125
max. permitted weight per finger	[kg]	2.4	2.4	2.4
IP class		40	40	40
min. / max. ambient temperature	[°C]	5/90	5/90	5/90
Repeat accuracy	[mm]	0.03	0.03	0.03

Main view

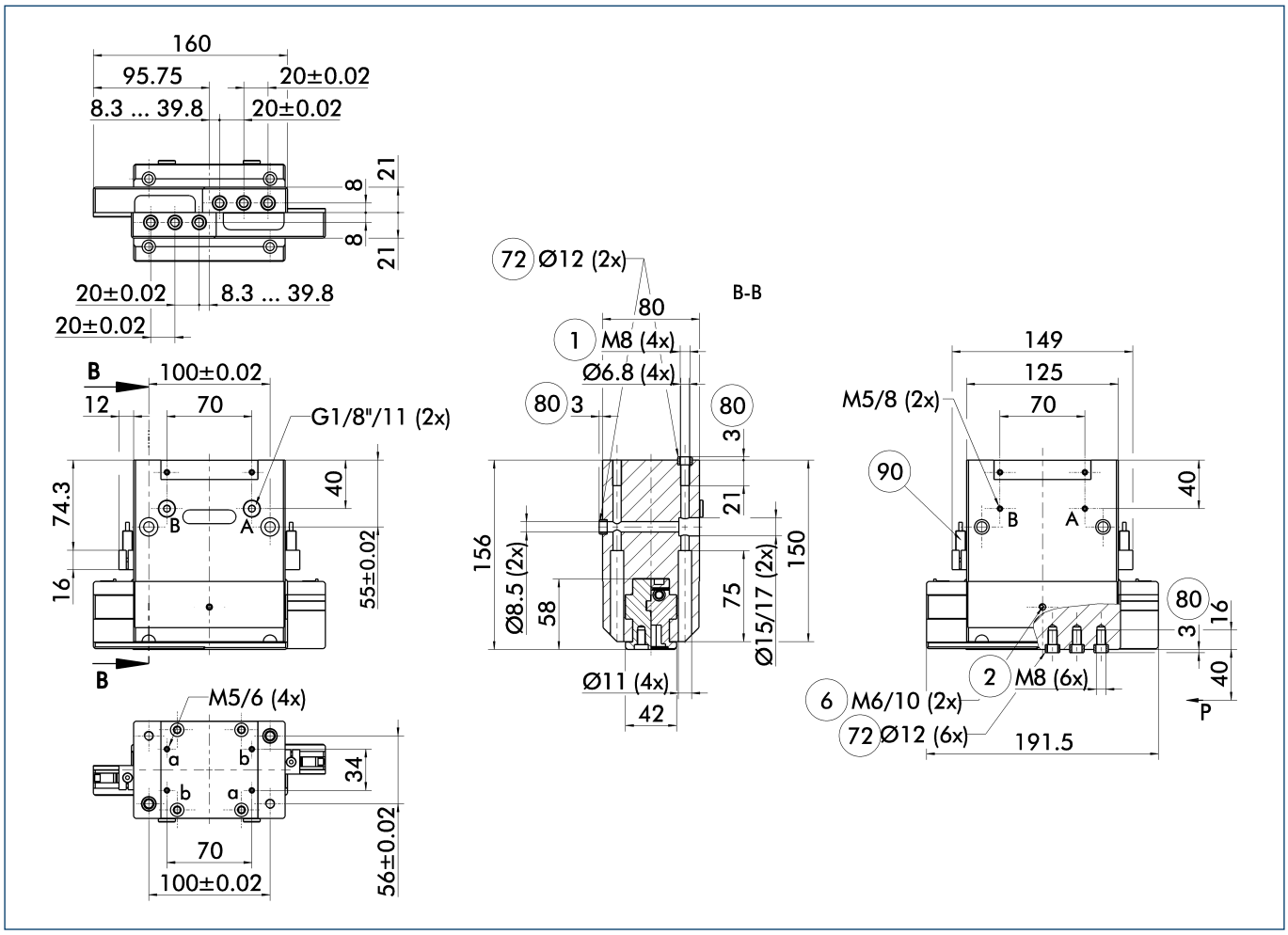

The drawing shows the gripper in the basic version with closed jaws, without dimensional consideration of the options described below.

ⓘ The SDV-P pressure maintenance valve can also be used for I.D. or O.D. gripping alternatively or in addition to the spring-loaded, mechanical gripping force maintenance device (see catalog section on "Accessories").

A, a Main / direct connection, gripper opening

B, b Main / direct connection, gripper closing

(1) Gripper connection

(2) Finger connection

(6) Lubricating nipple connection

(72) Fit for centering sleeves

(80) Depth of the centering sleeve hole in the mating part

(90) IN ... sensor

Maximum permitted finger projection

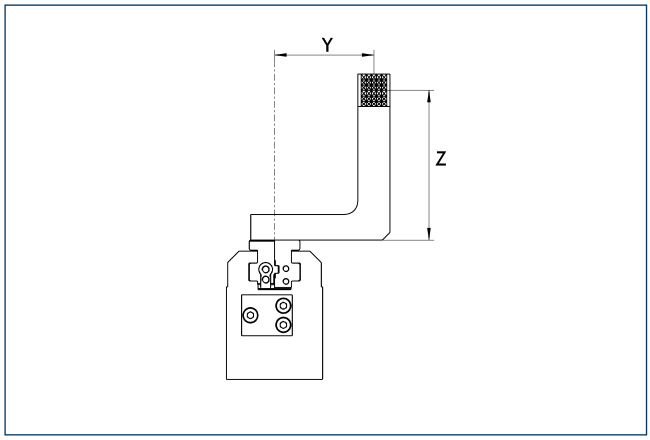

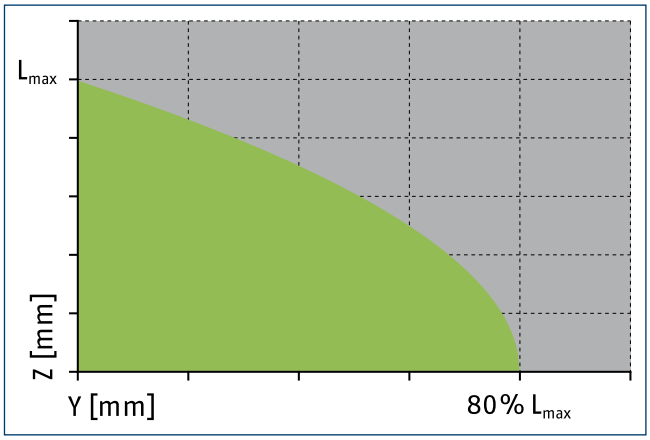

Permitted range

Inadmissible range

L_{max} is equivalent to the maximum permitted finger length, see the chart of technical specifications.

Hose-free direct connection M5

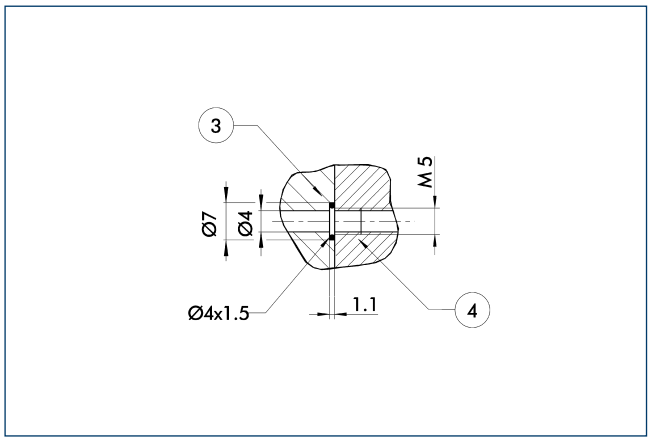

3 Adapter

4 Gripper

The direct connection is used for supplying compressed air without hoses. Instead, the pressure medium is fed through bore-holes in the mounting plate.

SDV-P pressure maintenance valve

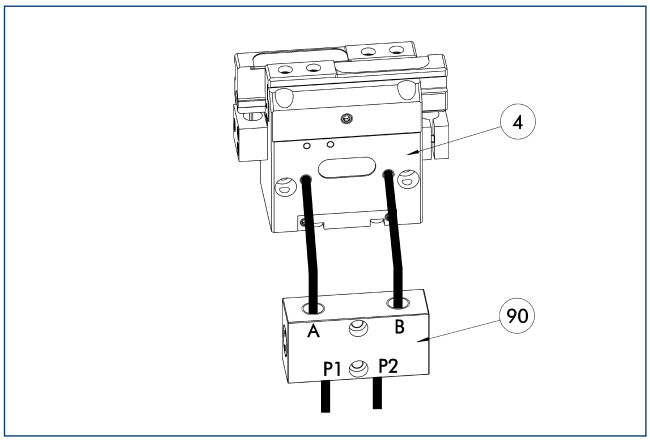

4 Gripper

90 SDV-P pressure maintenance valve

The SDV-P pressure maintenance valves ensure that the pressure in the piston chamber of pneumatic gripping, rotary, linear, and quick-change modules is maintained temporarily during an emergency stop.

Description	ID	
Pressure maintenance valve		
SDV-P 04	0403130	

Inductive proximity switches

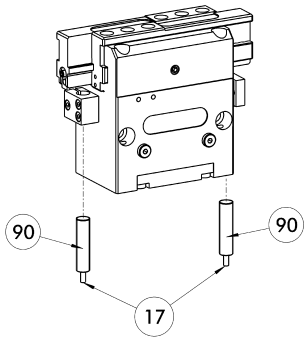

17 Cable outlet
90 IN ... sensor

Directly mounted limit position monitor.

Description	ID	Often combined
Inductive proximity switches		
IN 80-S-M12	0301578	
IN 80-S-M8	0301478	●
IN-C 80-S-M8	0301475	
INK 80-S	0301550	
Cable extensions		
KV BG12-SG12 3P-0030-PNP	0301999	
KV BG12-SG12 3P-0060-PNP	0301998	
KV BW08-SG08 3P-0030-PNP	0301495	
KV BW08-SG08 3P-0100-PNP	0301496	
KV BW08-SG08 3P-0200-PNP	0301497	●
KV BW12-SG12 3P-0030-PNP	0301595	
KV BW12-SG12 3P-0100-PNP	0301596	
KV BW12-SG12 3P-0200-PNP	0301597	
Clip for plug / socket		
CLI-M12	0301464	
CLI-M8	0301463	
Connection cables		
KA BG08-L 3P-0300-PNP	0301622	●
KA BG08-L 3P-0500-PNP	0301623	
KA BG12-L 3P-0500-PNP	30016369	
KA BW08-L 3P-0300-PNP	0301594	
KA BW08-L 3P-0500-PNP	0301502	
KA BW12-L 3P-0300-PNP	0301503	
KA BW12-L 3P-0500-PNP	0301507	
Sensor distributor		
V2-M8	0301775	●
V2-M12	0301776	●
V4-M12	0301747	
V4-M8	0301746	
V8-M12	0301752	
V8-M8	0301751	

ⓘ Two sensors (closer/S) are required for each unit, plus extension cables as an option. Please note the minimum permitted bending radii for the sensor cables, which are generally 35 mm.

Flexible. Loadable. Reliable.

PGB Universal Gripper

Gripper with high gripping force and high moment capacity due to the multi-tooth slideway as well as the center bore

Field of Application

For universal use in clean and slightly dirty environments. Suitable for applications that require a center bore, e.g. for workpiece feed, special sensor systems or optical recognition systems

Advantages – Your benefit

Robust multi-tooth guidance for precise handling

Center through-hole for feed-through of workpieces, supply hoses, sensor systems, optical workpiece recognition systems, etc.

High maximum moments possible suitable for using long gripper fingers

Drive concept oval piston for maximum gripping forces

Mounting from two sides in three screw directions for universal and flexible gripper assembly

Air supply via hose-free direct connection or screw connections for flexible pressure supply in all automated systems

Comprehensive sensor accessory program for versatile interrogation possibilities and control of stroke position

Sizes	Weight	Gripping force	Stroke per jaw	Workpiece weight
Quantity: 4	0.28 .. 1.32 kg	90 .. 610 N	4 .. 10 mm	0.7 .. 3.3 kg

Functional Description

The oval piston is moved up or down by compressed air.
The angled active surfaces of the wedge-hook produce a synchronized, parallel jaw motion.

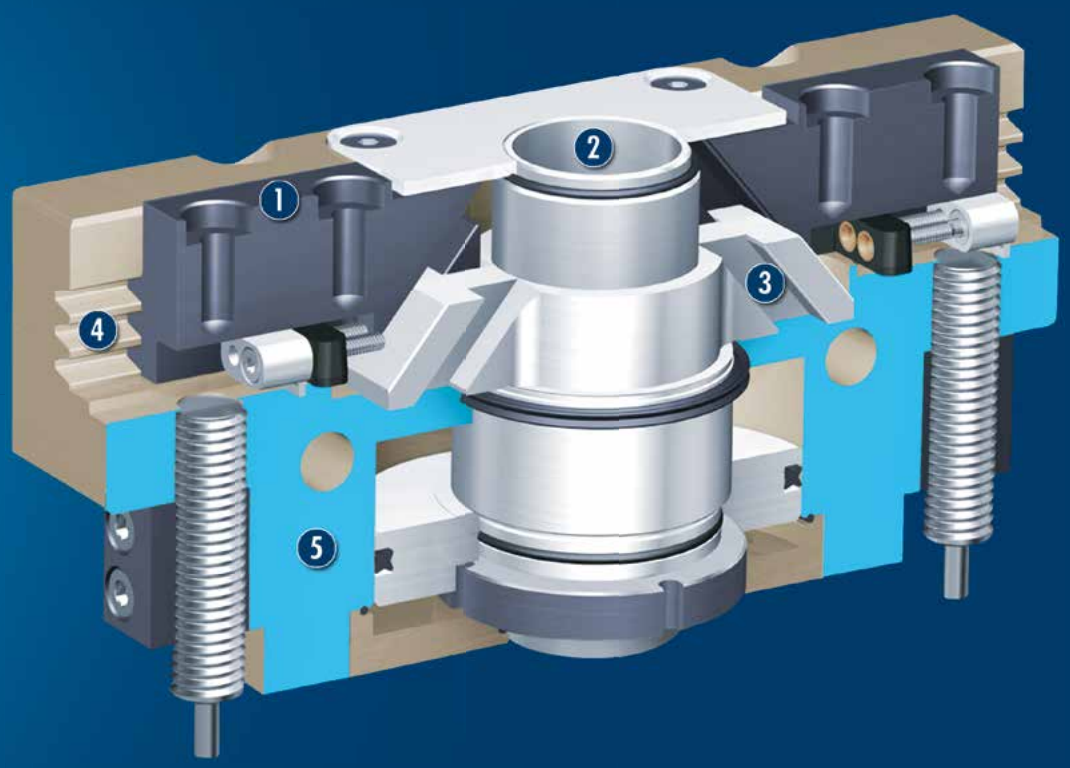

① **Base jaw**
for the connection of workpiece-specific gripper fingers

② **Center bore**
for workpiece feeding, for sensor systems, actuators (ejectors) or optical workpiece recognition

③ **Wedge-hook design**
for high power transmission and centric gripping

④ **Multiple-tooth guidance**
High-loadable base jaw guidance with minimum play for long fingers

⑤ **Housing**
Weight-optimized through application of high-strength aluminum alloy

CAD data, operating manuals and other current product documents are available at **www.schunk.com**

General Notes about the Series

Operating principle: Wedge-hook kinematics

Housing material: Aluminum alloy, anodized

Base jaw material: Steel

Actuation: pneumatic, with filtered compressed air as per DIN ISO 8573-1: 7 4 4

Warranty: 24 months (details, general terms and conditions and operating manuals can be downloaded at www.schunk.com)

Scope of delivery: Centering sleeves, O-rings for direct connection, assembly and operating manual with manufacturer's declaration

Gripping force maintenance device: possible with SDV-P pressure maintenance valve

Gripping force: is the arithmetic total of the gripping force applied to each gripper jaw at distance P (see illustration).

Finger length: is measured from the upper edge of the gripper housing in the direction of the main axis. The breach of the max. permitted finger length can bring higher abrasion. The maximum permissible finger length applies up to the nominal operating pressure. With higher pressures, the finger length must be reduced proportionally to the nominal operating pressure.

Repeat accuracy: is defined as the spread of the limit position after 100 consecutive strokes.

Workpiece weight: is calculated for a force-fit connection with a coefficient of friction of 0.1 and a safety factor of 2 against slippage of the workpiece on acceleration due to gravity g. Considerably heavier workpiece weights are permitted with form-fit gripping.

Closing and opening times: are purely the times that the base jaws or fingers are in motion. Valve switching times, hose filling times or PLC reaction times are not included in the above times and must be taken into consideration when determining cycle times.

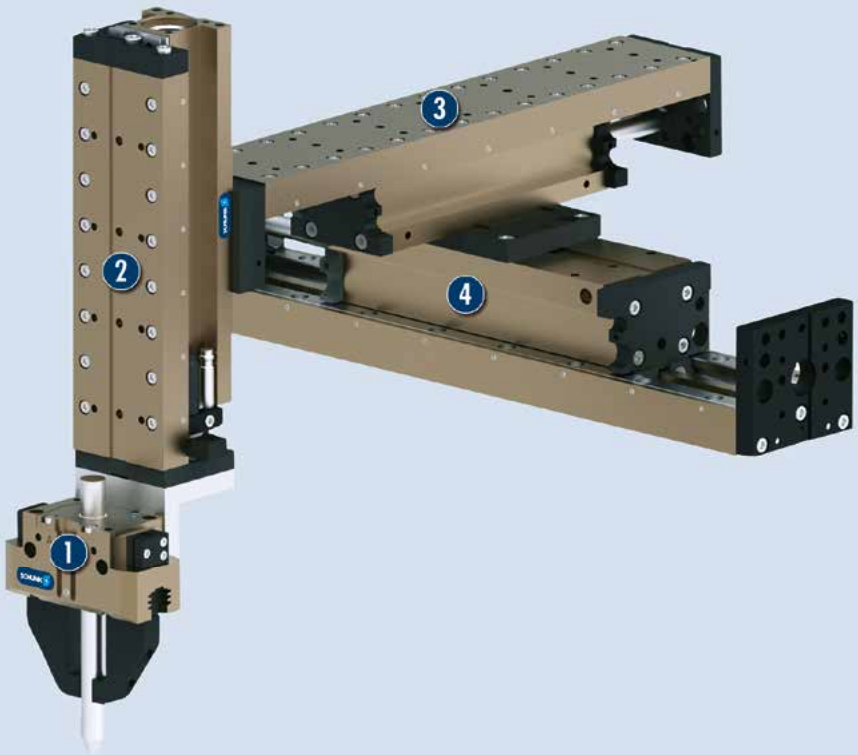

Application example

Assembly unit for long axes. Feeding is done via the center bore of the gripper to save space.

1. PGB 2-Finger Parallel Gripper
2. CLM Linear Module
3. LM Linear Module
4. LM Linear Module

SCHUNK offers more ...

The following components make the product PGB even more productive – the suitable addition for the highest functionality, flexibility, reliability, and controlled production.

Centering Sleeves

Fittings

Magnetic Switches

Inductive Proximity Switches

Sensor Distributor

Gripper Pads

Sensor Cables

Universal Intermediate Jaw

SDV-P Pressure Maintenance Valve

Finger Blanks with Jaw Quick-change System

Force Measuring Jaws

Analog Position Sensor

ⓘ Further information regarding the products can be found on the following product pages or at www.schunk.com. Please contact us for further information: SCHUNK technical hotline +49-7133-103-2696

Options and special Information

With its center bore, the PGB series is the optimal standard solution for many areas of application.

PGB 64

SCHUNK Grippers pneumatic | 2-Finger Parallel Grippers | Universal Gripper

Gripping force, O.D. gripping

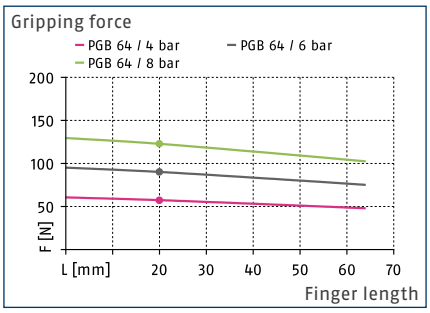

Gripping force, I.D. gripping

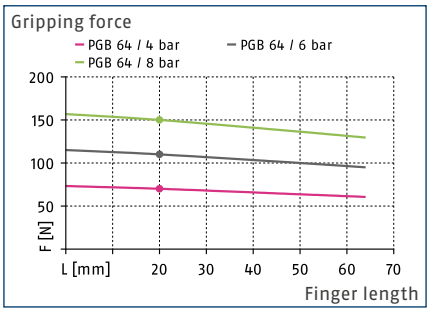

Finger load

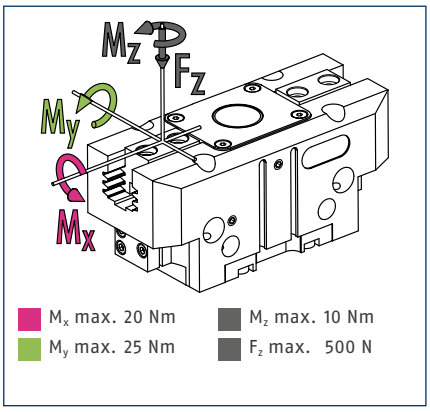

ⓘ The indicated moments and forces are static values, apply per base jaw and may occur simultaneously. M_y may arise in addition to the moment generated by the gripping force itself. If the max. permitted finger weight is exceeded, it is impreative to throttle the air supply so that the jaw movement occurs without any hitting or bouncing. Service life may be reduced.

Technical data

Description		PGB 64
ID		0300360
Stroke per jaw	[mm]	4
Closing- / opening force	[N]	90/110
Weight	[kg]	0.28
Recommended workpiece weight	[kg]	0.7
Fluid consumption per double stroke	[cm³]	5
min. / max. operating pressure	[bar]	2.5/8
Nominal operating pressure	[bar]	6
Closing- / opening time	[s]	0.02/0.02
max. permitted finger length	[mm]	64
max. permitted weight per finger	[kg]	0.18
IP class		40
min. / max. ambient temperature	[°C]	5/90
Repeat accuracy	[mm]	0.01
Diameter of center bore	[mm]	10

Main view

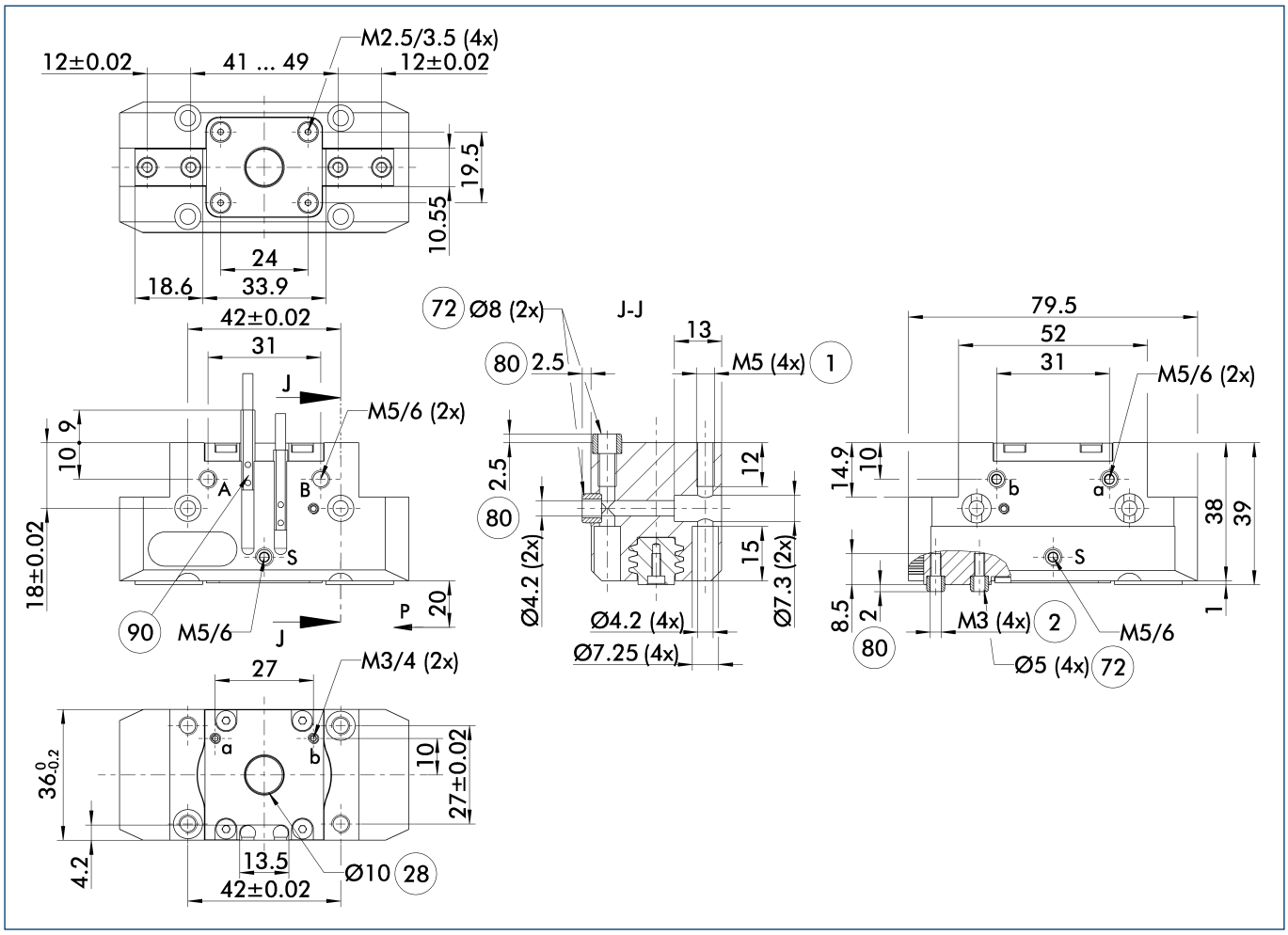

The drawing shows the gripper in the basic version with closed jaws, without dimensional consideration of the options described below.

ⓘ The SDV-P pressure maintenance valve can be used as a gripping force maintenance device (see catalog section on "Accessories").

A, a Main / direct connection, gripper opening

B, b Main / direct connection, gripper closing

S Air purge connection (0.5 ... 1 bar)

(1) Gripper connection

(2) Finger connection

(28) Through-bore

(72) Fit for centering sleeves

(80) Depth of the centering sleeve hole in the mating part

(90) MMS 22... sensor

Maximum permitted finger projection

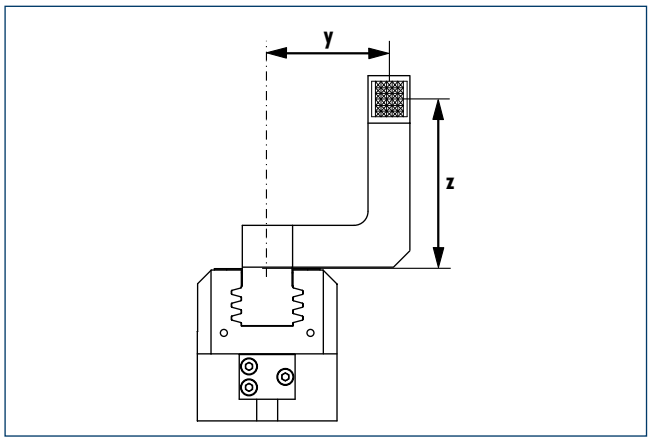

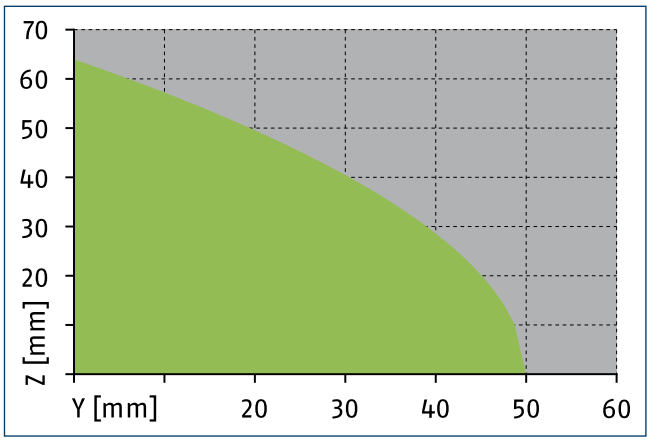

Permitted range

Inadmissible range

The curve applies for the base version (Stroke -1). For other versions, the curve must be offset in parallel corresponding to the max. permissible finger length.

Hose-free direct connection M3

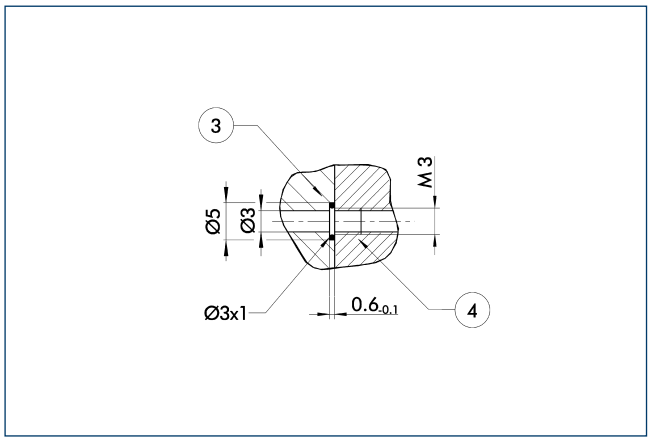

3 Adapter 4 Gripper

The direct connection is used for supplying compressed air without hoses. Instead, the pressure medium is fed through bore-holes in the mounting plate.

SDV-P pressure maintenance valve

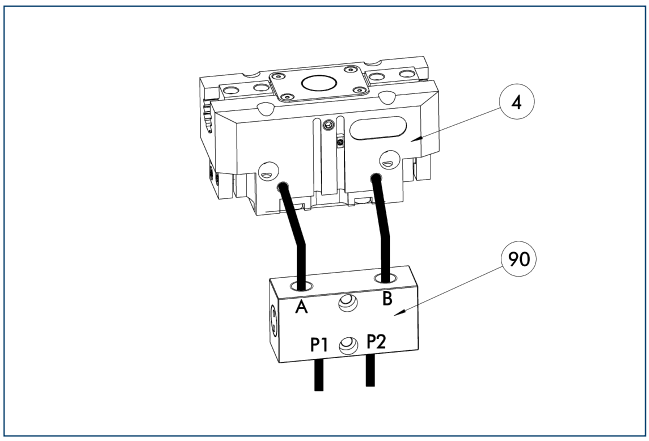

(4) Gripper

(90) SDV-P pressure maintenance valve

The SDV-P pressure maintenance valves ensure that the pressure in the piston chamber of pneumatic gripping, rotary, linear, and quick-change modules is maintained temporarily during an emergency stop.

Description	ID	
Pressure maintenance valve		
SDV-P 04	0403130	

BSWS jaw quick-change systems

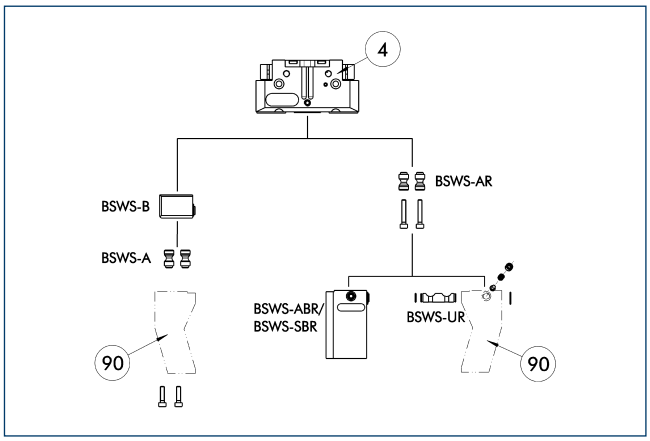

(4) Gripper

(90) Customized gripper fingers

Different jaw quick-change systems are available for this gripper. For more detailed information please see the relevant product chapters in the catalog.

Description	ID	
Jaw quick-change system adapter		
BSWS-AR 50	0300091	
BSWS-A 50	0303020	
Jaw quick-change system base		
BSWS-B 50	0303021	
Finger blanks with jaw quick-change system		
BSWS-ABR-PGZN-plus 50	0300071	
BSWS-SBR-PGZN-plus 50	0300081	
Jaw quick-change system reversed		
BSWS-UR 50	0302990	

ⓘ Only the systems listed in the table can be used.

ZBA L-plus 50 intermediate jaws

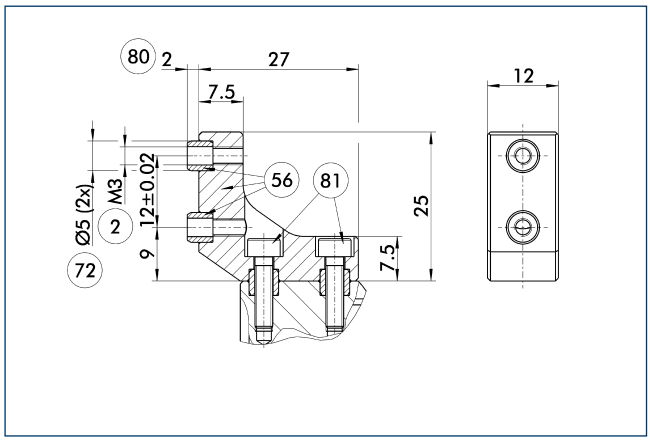

- (2) Finger connection
- (56) Included in delivery
- (72) Fit for centering sleeves
- (80) Depth of the centering sleeve hole in the mating part
- (81) Not included in the scope of delivery

Optionally intermediate jaws can be used, enabling direct connection and alignment of top jaws and various standard accessories in Z-direction.

Description	ID	Material	Scope of delivery
Intermediate jaws			
ZBA-L-plus 50	0311712	Aluminum	1

UZB 50 universal intermediate jaw

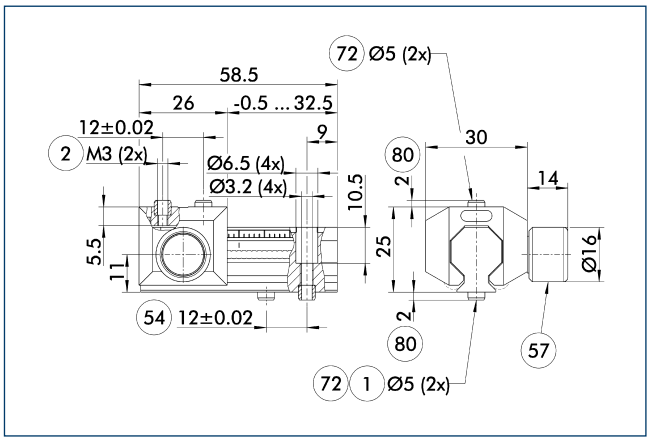

- (1) Gripper connection
- (2) Finger connection
- (54) Optional right or left connection
- (57) Locking
- (72) Fit for centering sleeves
- (80) Depth of the centering sleeve hole in the mating part

The universal intermediate jaw allows fast tool-free and reliable plugging and shifting of top jaws at the gripper.

Description	ID	Grid dimension [mm]
Universal intermediate jaw		
UZB 50	0300041	1.5
Finger blanks		
ABR-PGZN-plus 50	0300009	
SBR-PGZN-plus 50	0300019	

FMS-ZBA / ZBP 50 force-measuring jaws

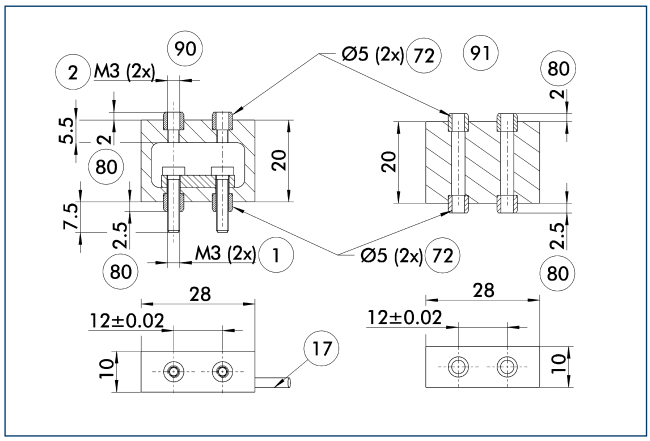

1 Gripper connection
2 Finger connection
17 Cable outlet
72 Fit for centering sleeves
80 Depth of the centering sleeve hole in the mating part
90 Active intermediate jaws
91 Passive intermediate jaws

Force measuring jaws measure gripping forces, but can also determine workpiece weights or dimensional deviations. There are active and passive intermediate jaws (FMS-ZBA or FMS-ZBP). At least one active force measuring jaw is required per gripper, the rest can be passive. For each active jaw, a FMS-A control unit and a FMS-AK connection cable are required.

Description	ID	Often combined
Active intermediate jaws		
FMS-ZBA 50	0301830	
Passive intermediate jaws		
FMS-ZBP 50	0301831	
Connection cables		
FMS-AK0200	0301820	●
FMS-AK0500	0301821	
FMS-AK1000	0301822	
FMS-AK2000	0301823	
Electronic processor		
FMS-A1	0301810	

ABR- / SBR-PGZN-plus 50 finger blanks

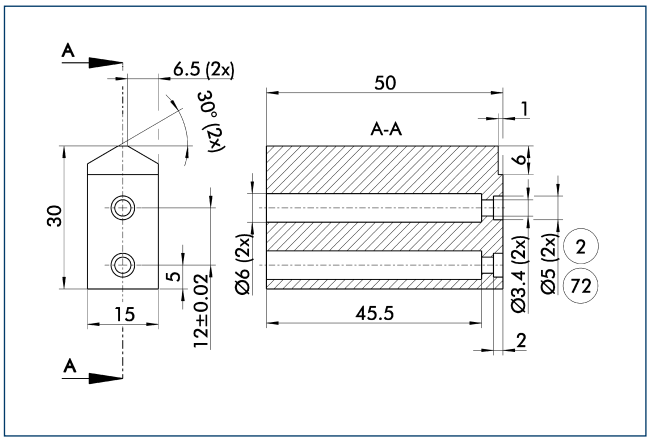

2 Finger connection
72 Fit for centering sleeves

Finger blanks for customized subsequent machining.

Description	ID	Material	Scope of delivery
Finger blanks			
ABR-PGZN-plus 50	0300009	Aluminum	1
SBR-PGZN-plus 50	0300019	16MnCr5	1

Valve VB-PGN-plus 64 valve box

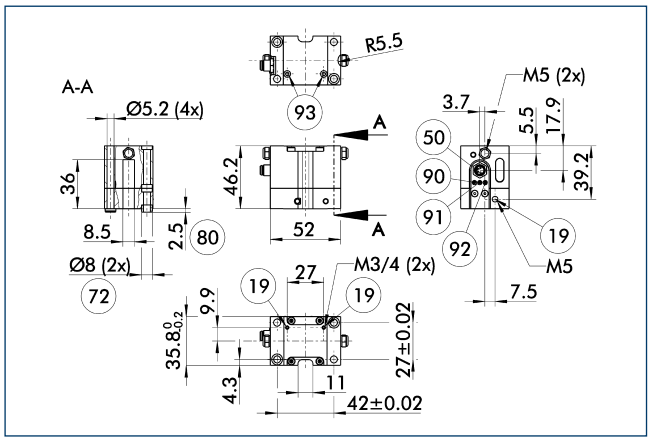

(19) Air connection
(50) Electrical connection
(72) Fit for centering sleeves
(80) Depth of the centering sleeve hole in the mating part
(90) Voltage status indicator
(91) Valve switched b for gripper opened
(92) Valve switched a for gripper opened
(93) Valve connection a and b

Description	ID	
Valve box		
VB-PGN-plus 64	0310092	

Valve box

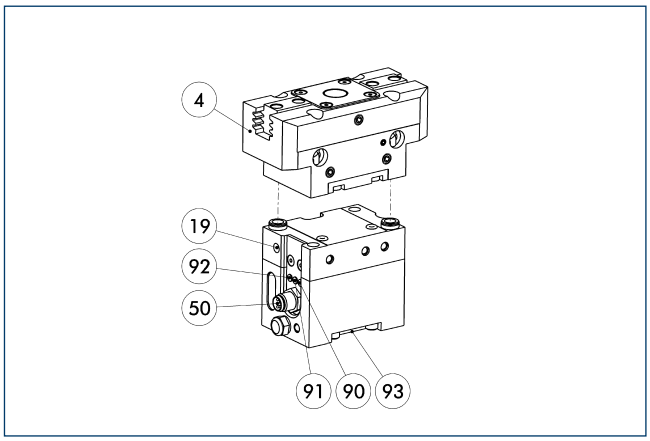

(4) Gripper
(19) Air connection
(50) Electrical connection
(90) Power supply
(91) Valve switched b for gripper opened
(92) Valve switched a for gripper opened
(93) Direct connection for hose-free compressed air supply

Ready to install, local control solution! Valves are attached directly to the handling component. As a result, cycle times are significantly reduced and the number of hoses, commissioning times, and air consumption are minimised while maximum process safety is assured.

Description	ID	Often combined
Valve box		
VB-PGN-plus 64	0310092	
Connection cables		
KA BG08-L 4P-0500	0307767	●
KA BG08-L 4P-1000	0307768	
KA BW08-L 4P-0500	0307765	
KA BW08-L 4P-1000	0307766	
KA BG08-L 3P-0300-PNP	0301622	●
KA BG08-L 3P-0500-PNP	0301623	
KA BW08-L 3P-0300-NPN	0301602	
KA BW08-L 3P-0300-PNP	0301594	
KA BW08-L 3P-0500-NPN	9641116	
KA BW08-L 3P-0500-PNP	0301502	
Sensor distributor		
V2-M8-4P-2XM8-3P	0301380	
Cable extensions		
KV BW08-SG08 3P-0030-PNP	0301495	
KV BW08-SG08 3P-0100-PNP	0301496	
KV BW08-SG08 3P-0200-PNP	0301497	●
Clip for plug / socket		
CLI-M8	0301463	

ⓘ Valve and sensor signals of the unit can be merged on a bus distributor so that the electrical as well as the pneumatic connections can be decentralized.

MMS electronic magnetic switches

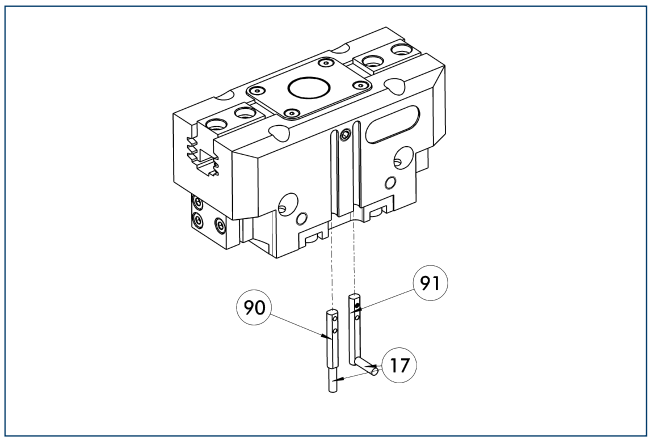

(17) Cable outlet
(91) MMS 22...-SA sensor
(90) MMS 22... sensor

End position monitoring for mounting in the C-slot.

Description	ID	Often combined
MMS electronic magnetic switches		
MMS 22-S-M8-PNP	0301032	●
MMSK 22-S-PNP	0301034	
MMS electronic magnetic switches with lateral cable outlet		
MMS 22-S-M8-PNP-SA	0301042	●
MMSK 22-S-PNP-SA	0301044	
Cable extensions		
KV BW08-SG08 3P-0030-PNP	0301495	
KV BW08-SG08 3P-0100-PNP	0301496	
KV BW08-SG08 3P-0200-PNP	0301497	●
Clip for plug / socket		
CLI-M8	0301463	
Connection cables		
KA BG08-L 3P-0300-PNP	0301622	●
KA BG08-L 3P-0500-PNP	0301623	
KA BW08-L 3P-0300-PNP	0301594	
KA BW08-L 3P-0500-PNP	0301502	
Sensor distributor		
V2-M8	0301775	●
V4-M8	0301746	
V8-M8	0301751	

ⓘ Two sensors (closer/S) are required for each unit, plus extension cables as an option. Please note the minimum permitted bending radii for the sensor cables, which are generally 35 mm.

MMS PI1 programmable magnetic switches

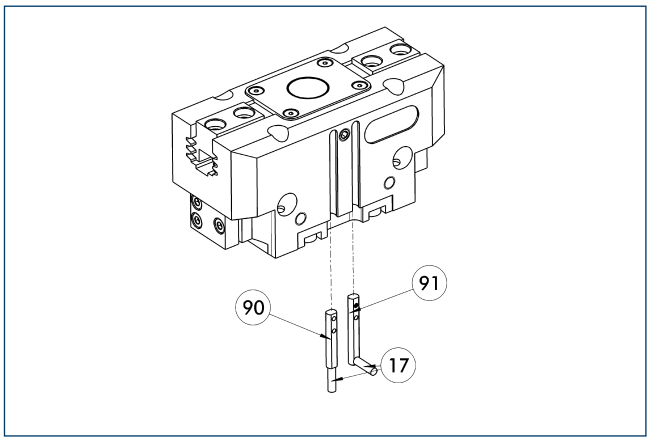

(17) Cable outlet
(91) MMS 22...-PI1-...-SA sensor
(90) MMS 22...-PI1-... sensor

Position query with one programmable position per sensor and electronics integrated in sensor. Programmable via MT magnet teaching tool (included in the scope of delivery) or ST plug teaching tool (optional). Limit position query mounted in C-groove. If the ST plug teaching tools are listed in the table, teaching can only take place with the ST plug teaching tools.

Description	ID	Often combined
MMS PI1 programmable magnetic switches		
MMS 22-PI1-S-M8-PNP	0301160	●
MMSK 22-PI1-S-PNP	0301162	
MMS PI1-HD programmable magnetic switches with stainless steel housing		
MMS 22-PI1-S-M8-PNP-HD	0301110	●
MMSK 22-PI1-S-PNP-HD	0301112	
MMS PI1 programmable magnetic switches with lateral cable outlet		
MMS 22-PI1-S-M8-PNP-SA	0301166	●
MMSK 22-PI1-S-PNP-SA	0301168	

ⓘ Two sensors (closer/S) are required for each unit, plus extension cables as an option. Please note the minimum permitted bending radii for the sensor cables, which are generally 35 mm. Connection cable, cable extensions, and sensor distributors can be found in the table for the MMS 22.

MMS PI2 programmable magnetic switches

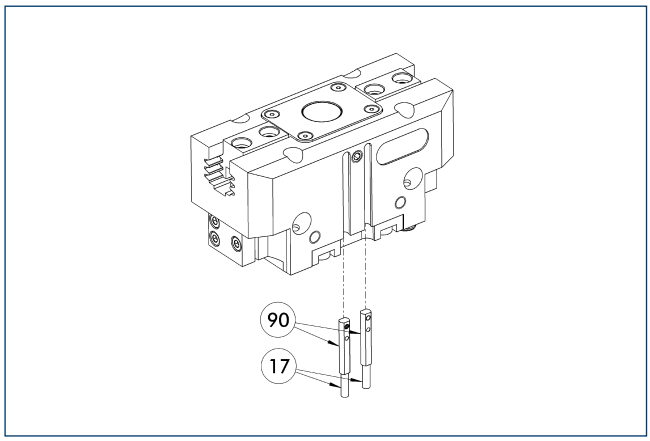

(17) Cable outlet (90) MMS 22...-PI2-... sensor

Position query with two programmable positions per sensor and electronics integrated in sensor. Programmable via MT magnet teaching tool (included in the scope of delivery) or ST plug teaching tool (optional). Limit position query mounted in C-groove. If the ST plug teaching tools are listed in the table, teaching can only take place with the ST plug teaching tools.

Description	ID	Often combined
MMS PI2 programmable magnetic switches		
MMS 22-PI2-S-M8-PNP	0301180	●
MMSK 22-PI2-S-PNP	0301182	
MMS PI2-HD programmable magnetic switches with stainless steel housing		
MMS 22-PI2-S-M8-PNP-HD	0301130	●
MMSK 22-PI2-S-PNP-HD	0301132	

ⓘ Per unit one sensor (closer/S) is required, optionally a cable extension. Please note the minimum permitted bending radii for the sensor cables, which are generally 35 mm. Connection cable, cable extensions, and sensor distributors can be found in the table for the MMS-P 22.

MMS-P programmable magnetic switches

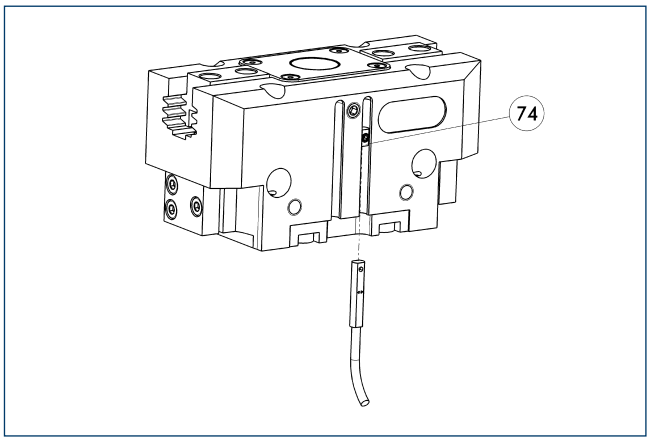

(74) Stop for MMS-P

Position monitoring with two programmable positions per sensor. The end position monitoring is mounted in the C-slot.

Description	ID	Often combined
MMS-P programmable magnetic switches		
MMSK-P 22-S-PNP	0301371	
MMS-P 22-S-M8-PNP	0301370	●
Clip for plug / socket		
CLI-M8	0301463	
Connection cables		
KA BG08-L 4P-0500	0307767	●
KA BG08-L 4P-1000	0307768	
KA BW08-L 4P-0500	0307765	
KA BW08-L 4P-1000	0307766	
Sensor distributor		
V2-M8-4P-2XM8-3P	0301380	

ⓘ Per unit one sensor (closer/S) is required, optionally a cable extension. Please note the minimum permitted bending radii for the sensor cables, which are generally 35 mm.

PGB 80

SCHUNK Grippers pneumatic | 2-Finger Parallel Grippers | Universal Gripper

Gripping force, O.D. gripping

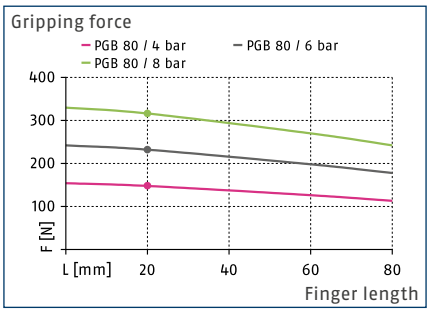

Gripping force, I.D. gripping

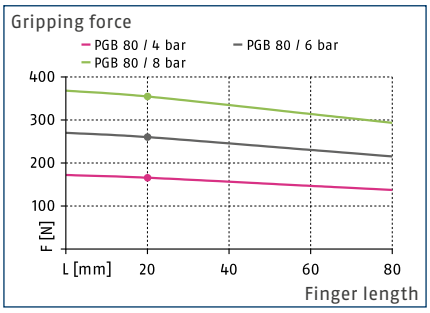

Finger load

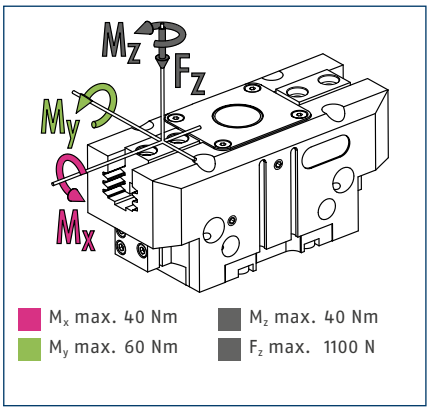

ⓘ The indicated moments and forces are static values, apply per base jaw and may occur simultaneously. M_y may arise in addition to the moment generated by the gripping force itself. If the max. permitted finger weight is exceeded, it is impreative to throttle the air supply so that the jaw movement occurs without any hitting or bouncing. Service life may be reduced.

Technical data

Description		PGB 80
ID		0300363
Stroke per jaw	[mm]	6
Closing- / opening force	[N]	240/260
Weight	[kg]	0.47
Recommended workpiece weight	[kg]	1.25
Fluid consumption per double stroke	[cm³]	11
min. / max. operating pressure	[bar]	2.5/8
Nominal operating pressure	[bar]	6
Closing- / opening time	[s]	0.03/0.03
max. permitted finger length	[mm]	80
max. permitted weight per finger	[kg]	0.35
IP class		40
min. / max. ambient temperature	[°C]	5/90
Repeat accuracy	[mm]	0.01
Diameter of center bore	[mm]	14

Main view

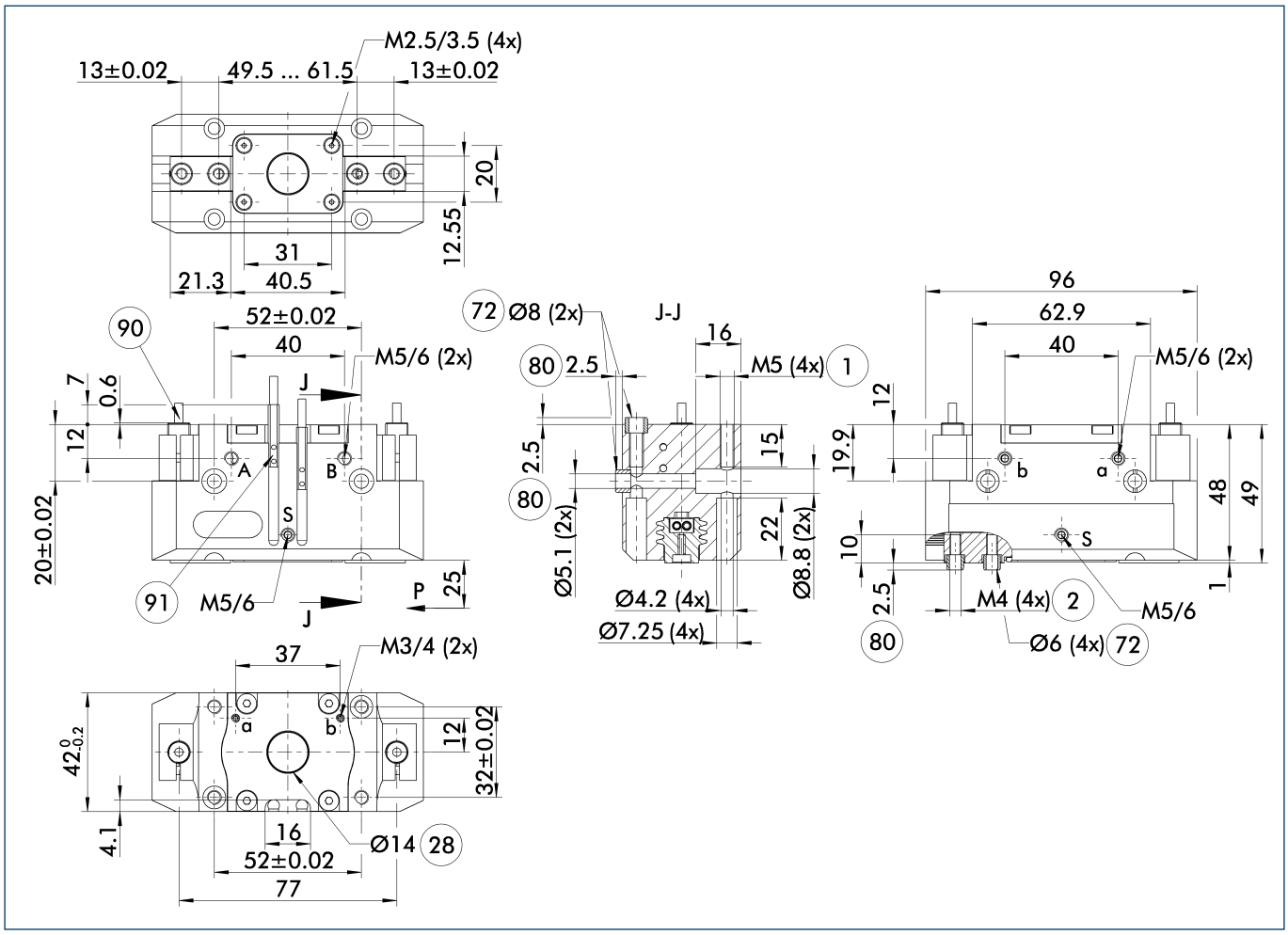

The drawing shows the gripper in the basic version with closed jaws, without dimensional consideration of the options described below.

ⓘ The SDV-P pressure maintenance valve can be used as a gripping force maintenance device (see catalog section on "Accessories").

A, a Main / direct connection, gripper opening

B, b Main / direct connection, gripper closing

S Air purge connection (0.5 ... 1 bar)

(1) Gripper connection

(2) Finger connection

(28) Through-bore

(72) Fit for centering sleeves

(80) Depth of the centering sleeve hole in the mating part

(90) IN ... sensor

(91) MMS 22... sensor

Maximum permitted finger projection

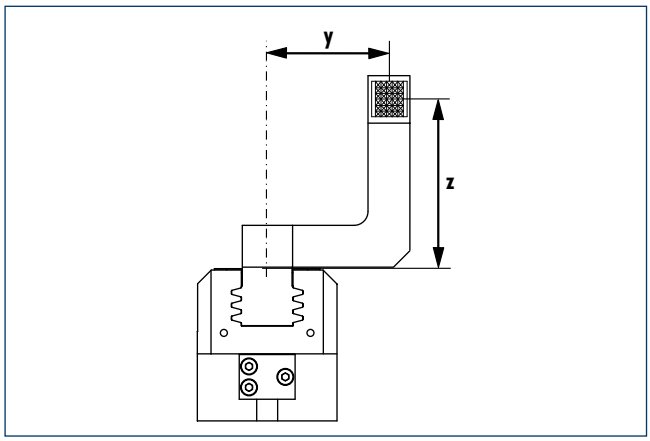

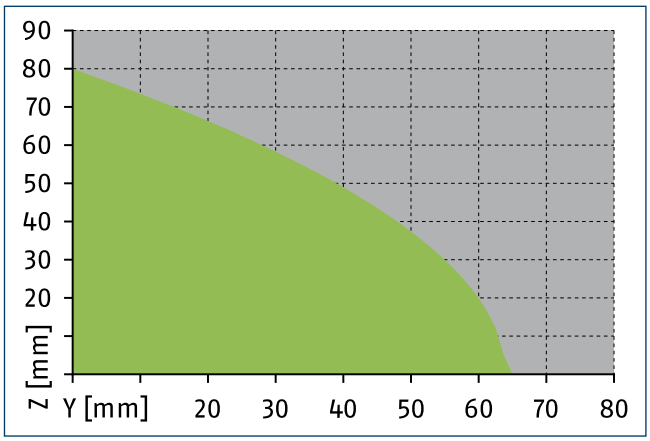

Permitted range

Inadmissible range

The curve applies for the base version (Stroke -1). For other versions, the curve must be offset in parallel corresponding to the max. permissible finger length.

Hose-free direct connection M3

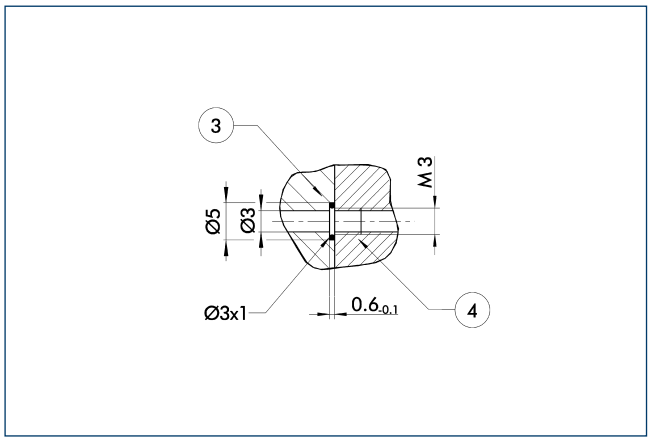

3 Adapter 4 Gripper

The direct connection is used for supplying compressed air without hoses. Instead, the pressure medium is fed through bore-holes in the mounting plate.

SDV-P pressure maintenance valve

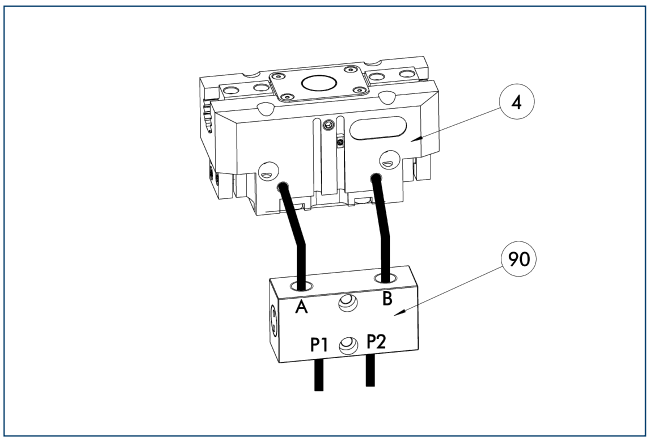

(4) Gripper

(90) SDV-P pressure maintenance valve

The SDV-P pressure maintenance valves ensure that the pressure in the piston chamber of pneumatic gripping, rotary, linear, and quick-change modules is maintained temporarily during an emergency stop.

Description	ID	
Pressure maintenance valve		
SDV-P 04	0403130	

BSWS jaw quick-change systems

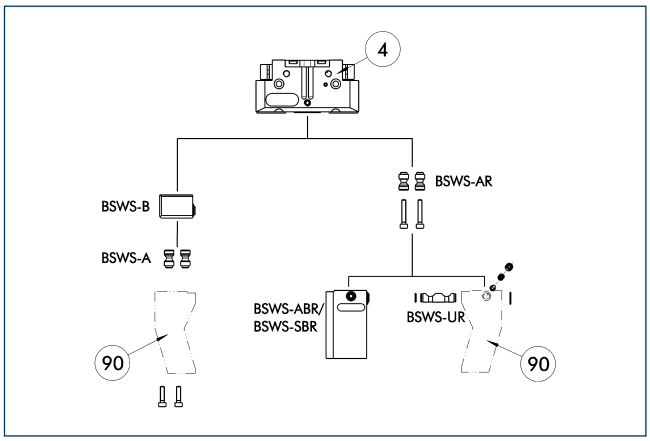

(4) Gripper

(90) Customized gripper fingers

There are various jaw quick-change systems available for the grippers. For detailed information, refer to the appropriate product.

Description	ID	
Jaw quick-change system adapter		
BSWS-AR 64	0300092	
BSWS-A 64	0303022	
Jaw quick-change system base		
BSWS-B 64	0303023	
Finger blanks with jaw quick-change system		
BSWS-ABR-PGZN-plus 64	0300072	
BSWS-SBR-PGZN-plus 64	0300082	
Jaw quick-change system reversed		
BSWS-UR 64	0302991	

ⓘ Only the systems listed in the table can be used.

ZBA L-plus 64 intermediate jaws

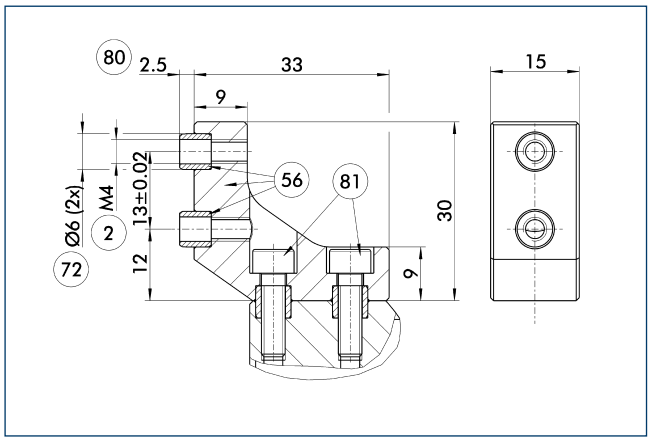

- 2 Finger connection
- 56 Included in delivery
- 72 Fit for centering sleeves
- 80 Depth of the centering sleeve hole in the mating part
- 81 Not included in the scope of delivery

Optionally intermediate jaws can be used, enabling direct connection and alignment of top jaws and various standard accessories in Z-direction.

Description	ID	Material	Scope of delivery
Intermediate jaws			
ZBA-L-plus 64	0311722	Aluminum	1

UZB 64 universal intermediate jaw

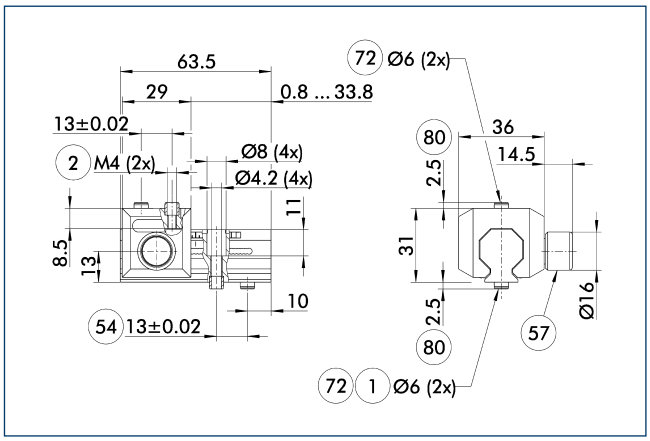

- 1 Gripper connection
- 2 Finger connection
- 54 Optional right or left connection
- 57 Locking
- 72 Fit for centering sleeves
- 80 Depth of the centering sleeve hole in the mating part

The universal intermediate jaw allows fast tool-free and reliable plugging and shifting of top jaws at the gripper.

Description	ID	Grid dimension [mm]
Universal intermediate jaw		
UZB 64	0300042	1.5
Finger blanks		
ABR-PGZN-plus 64	0300010	
SBR-PGZN-plus 64	0300020	

FMS-ZBA / ZBP 64 force-measuring jaws

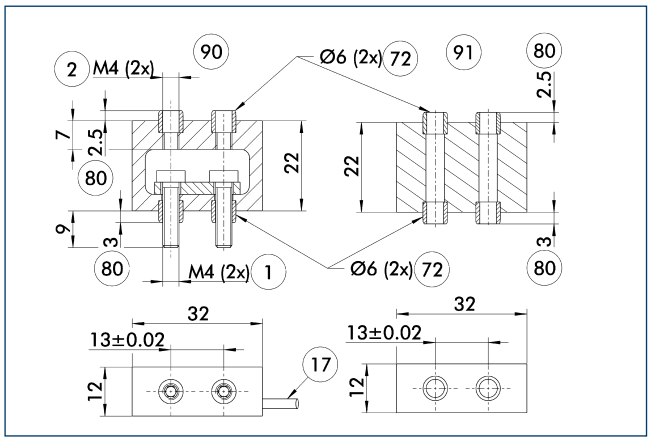

1 Gripper connection
2 Finger connection
17 Cable outlet
72 Fit for centering sleeves
80 Depth of the centering sleeve hole in the mating part
90 Active intermediate jaws
91 Passive intermediate jaws

Force measuring jaws measure gripping forces, but can also determine workpiece weights or dimensional deviations. There are active and passive intermediate jaws (FMS-ZBA or FMS-ZBP). At least one active force measuring jaw is required per gripper, the rest can be passive. For each active jaw, a FMS-A control unit and a FMS-AK connection cable are required.

Description	ID	Often combined
Active intermediate jaws		
FMS-ZBA 64	0301832	
Passive intermediate jaws		
FMS-ZBP 64	0301833	
Connection cables		
FMS-AK0200	0301820	●
FMS-AK0500	0301821	
FMS-AK1000	0301822	
FMS-AK2000	0301823	
Electronic processor		
FMS-A1	0301810	

ABR- / SBR-PGZN-plus 64 finger blanks

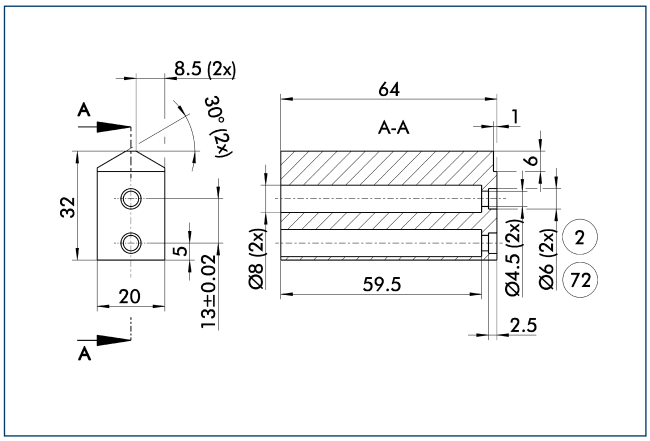

2 Finger connection
72 Fit for centering sleeves

Finger blanks for customized subsequent machining.

Description	ID	Material	Scope of delivery
Finger blanks			
ABR-PGZN-plus 64	0300010	Aluminum	1
SBR-PGZN-plus 64	0300020	16MnCr5	1

Inductive proximity switches

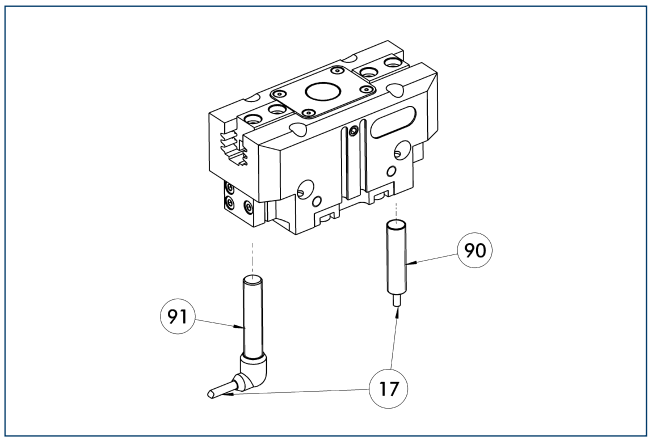

(17) Cable outlet
(90) IN ... sensor
(91) IN ...-SA sensor

Directly mounted limit position monitor.

Description	ID	Often combined
Inductive proximity switches		
IN 80-S-M12	0301578	
IN 80-S-M8	0301478	●
INK 80-S	0301550	
Inductive proximity switches with lateral outlet		
IN 80-S-M12-SA	0301587	
IN 80-S-M8-SA	0301483	●
INK 80-S-SA	0301566	
Cable extensions		
KV BG12-SG12 3P-0030-PNP	0301999	
KV BG12-SG12 3P-0060-PNP	0301998	
KV BW08-SG08 3P-0030-PNP	0301495	
KV BW08-SG08 3P-0100-PNP	0301496	
KV BW08-SG08 3P-0200-PNP	0301497	●
KV BW12-SG12 3P-0030-PNP	0301595	
KV BW12-SG12 3P-0100-PNP	0301596	
KV BW12-SG12 3P-0200-PNP	0301597	
Clip for plug / socket		
CLI-M12	0301464	
CLI-M8	0301463	
Connection cables		
KA BG08-L 3P-0300-PNP	0301622	●
KA BG08-L 3P-0500-PNP	0301623	
KA BG12-L 3P-0500-PNP	30016369	
KA BW08-L 3P-0300-PNP	0301594	
KA BW08-L 3P-0500-PNP	0301502	
KA BW12-L 3P-0300-PNP	0301503	
KA BW12-L 3P-0500-PNP	0301507	
Sensor distributor		
V2-M8	0301775	●
V2-M12	0301776	●
V4-M12	0301747	
V4-M8	0301746	

ⓘ Two sensors (closer/S) are required for each unit, plus extension cables as an option. Please note the minimum permitted bending radii for the sensor cables, which are generally 35 mm.

Flexible position sensor

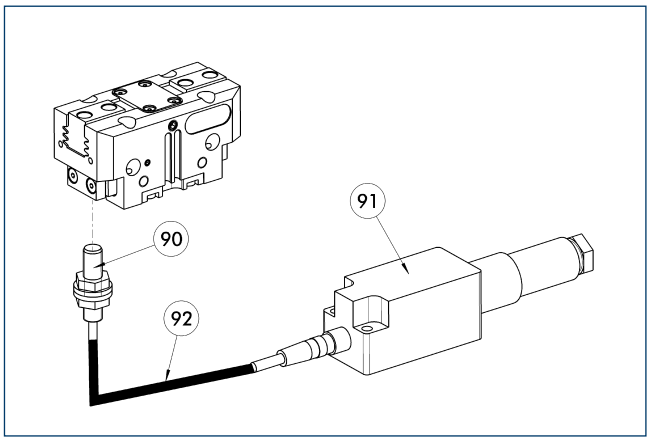

(90) FPS-S sensor
(91) FPS-F5 / -F5 T electronic processor
(92) Cable extensions

Flexible position monitoring of up to five positions.

Description	ID	Often combined
Mounting kit for FPS		
AS-FPS-PGZN-plus 64-1/80-2	0301630	
Electronic processor		
FPS-F5 T	0301807	
FPS-F5	0301805	●
Sensor		
FPS-S M8	0301704	
Clip for plug / socket		
CLI-M8	0301463	

ⓘ When using a FPS system, a FPS sensor (FPS-S) and a control unit (FPS-F5 / F5 T) are required for each gripper as well as a mounting kit (AS), if listed. Cable extensions (KV) are available as options in the "Accessories" catalog section.

MMS electronic magnetic switches

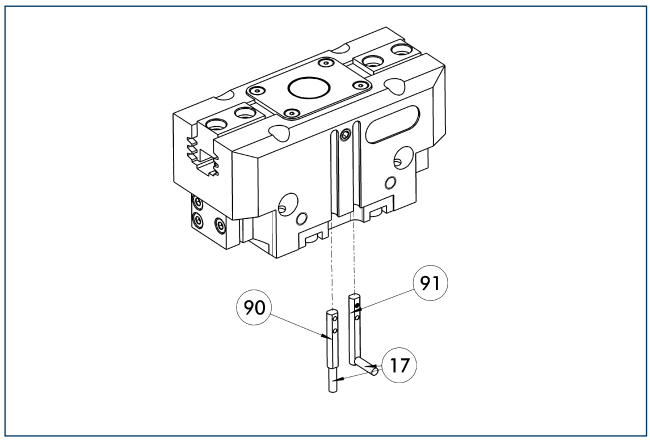

(17) Cable outlet
(91) MMS 22...-SA sensor
(90) MMS 22... sensor

End position monitoring for mounting in the C-slot.

Description	ID	Often combined
MMS electronic magnetic switches		
MMS 22-S-M8-PNP	0301032	●
MMSK 22-S-PNP	0301034	
MMS electronic magnetic switches with lateral cable outlet		
MMS 22-S-M8-PNP-SA	0301042	●
MMSK 22-S-PNP-SA	0301044	
Cable extensions		
KV BW08-SG08 3P-0030-PNP	0301495	
KV BW08-SG08 3P-0100-PNP	0301496	
KV BW08-SG08 3P-0200-PNP	0301497	●
Clip for plug / socket		
CLI-M8	0301463	
Connection cables		
KA BG08-L 3P-0300-PNP	0301622	●
KA BG08-L 3P-0500-PNP	0301623	
KA BW08-L 3P-0300-PNP	0301594	
KA BW08-L 3P-0500-PNP	0301502	
Sensor distributor		
V2-M8	0301775	●
V4-M8	0301746	
V8-M8	0301751	

ⓘ Two sensors (closer/S) are required for each unit, plus extension cables as an option. Please note the minimum permitted bending radii for the sensor cables, which are generally 35 mm.

MMS PI1 programmable magnetic switches

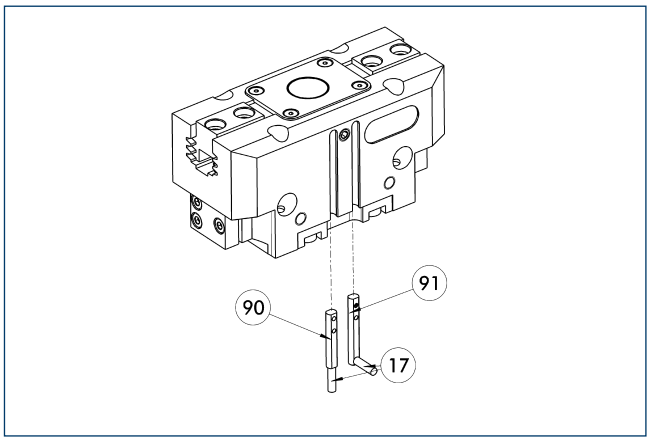

(17) Cable outlet
(91) MMS 22...-PI1-...-SA sensor
(90) MMS 22...-PI1-... sensor

Position query with one programmable position per sensor and electronics integrated in sensor. Programmable via MT magnet teaching tool (included in the scope of delivery) or ST plug teaching tool (optional). Limit position query mounted in C-groove. If the ST plug teaching tools are listed in the table, teaching can only take place with the ST plug teaching tools.

Description	ID	Often combined
MMS PI1 programmable magnetic switches		
MMS 22-PI1-S-M8-PNP	0301160	●
MMSK 22-PI1-S-PNP	0301162	
MMS PI1-HD programmable magnetic switches with stainless steel housing		
MMS 22-PI1-S-M8-PNP-HD	0301110	●
MMSK 22-PI1-S-PNP-HD	0301112	
MMS PI1 programmable magnetic switches with lateral cable outlet		
MMS 22-PI1-S-M8-PNP-SA	0301166	●
MMSK 22-PI1-S-PNP-SA	0301168	

ⓘ Two sensors (closer/S) are required for each unit, plus extension cables as an option. Please note the minimum permitted bending radii for the sensor cables, which are generally 35 mm. Connection cable, cable extensions, and sensor distributors can be found in the table for the MMS 22.

MMS PI2 programmable magnetic switches

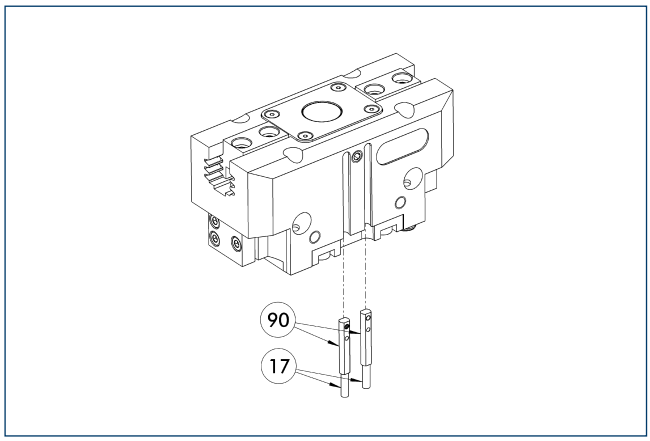

(17) Cable outlet (90) MMS 22...-PI2-... sensor

Position query with two programmable positions per sensor and electronics integrated in sensor. Programmable via MT magnet teaching tool (included in the scope of delivery) or ST plug teaching tool (optional). Limit position query mounted in C-groove. If the ST plug teaching tools are listed in the table, teaching can only take place with the ST plug teaching tools.

Description	ID	Often combined
MMS PI2 programmable magnetic switches		
MMS 22-PI2-S-M8-PNP	0301180	●
MMSK 22-PI2-S-PNP	0301182	
MMS PI2-HD programmable magnetic switches with stainless steel housing		
MMS 22-PI2-S-M8-PNP-HD	0301130	●
MMSK 22-PI2-S-PNP-HD	0301132	

ⓘ Per unit one sensor (closer/S) is required, optionally a cable extension. Please note the minimum permitted bending radii for the sensor cables, which are generally 35 mm.

MMS-P programmable magnetic switches

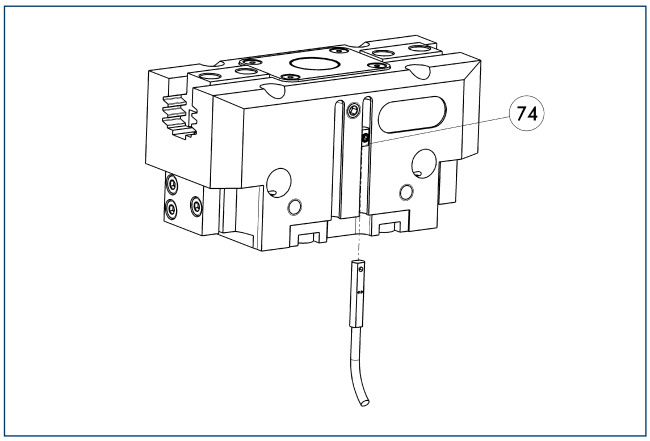

(74) Stop for MMS-P

Position monitoring with two programmable positions per sensor. The end position monitoring is mounted in the C-slot.

Description	ID	Often combined
MMS-P programmable magnetic switches		
MMSK-P 22-S-PNP	0301371	
MMS-P 22-S-M8-PNP	0301370	●
Clip for plug / socket		
CLI-M8	0301463	
Connection cables		
KA BG08-L 4P-0500	0307767	●
KA BG08-L 4P-1000	0307768	
KA BW08-L 4P-0500	0307765	
KA BW08-L 4P-1000	0307766	
Sensor distributor		
V2-M8-4P-2XM8-3P	0301380	

ⓘ Per unit one sensor (closer/S) is required, optionally a cable extension. Please note the minimum permitted bending radii for the sensor cables, which are generally 35 mm.

APS-Z80 analog position sensor

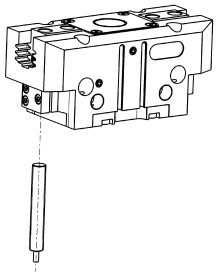

Contactlessly measuring, analog multi-position monitoring for any number of positions.

Description	ID	Often combined
Mounting kit for APS-Z80		
AS-APS-Z80-PGZN-plus 64-1	0302105	
Sensor		
APS-Z80-K	0302072	
APS-Z80-M8	0302070	●

ⓘ When using an APS system, one mounting kit (AS-APS-Z80) and one APS-Z80 sensor is required per gripper.

APS-M1 analog position sensor

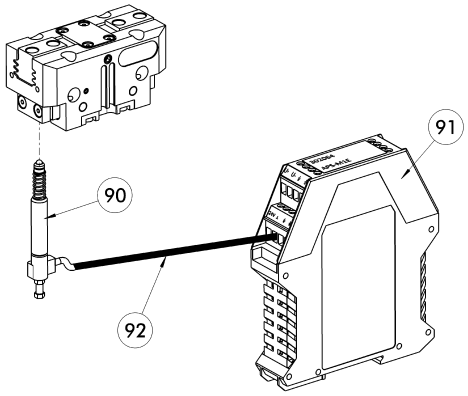

90 APS-M1S sensor
91 APS-M1E electronic processor
92 APS-K extension cable

Analog multi position monitoring for any desired positions.

Description	ID	Often combined
Mounting kit for APS-M1		
AS-APS-M1-PGZN-plus 64-1	0302075	
Connection cables		
APS-K0200	0302066	●
APS-K0700	0302068	
Electronic processor		
APS-M1E	0302064	
Sensor		
APS-M1S	0302062	

ⓘ When using an APS system, for each gripper a mounting kit (AS-APS-M1), an APS-M1S sensor (incl. 3 m cable) as well as an electronics (APS-M1e) are required. An extension cable (APS-K) can be connected between the sensor and the electronics as an option. The max. cable length between the sensor and the electronics is 10 m, between the electronics and their control unit (PLC) it is max. 1 m.

Cylindrical reed switches

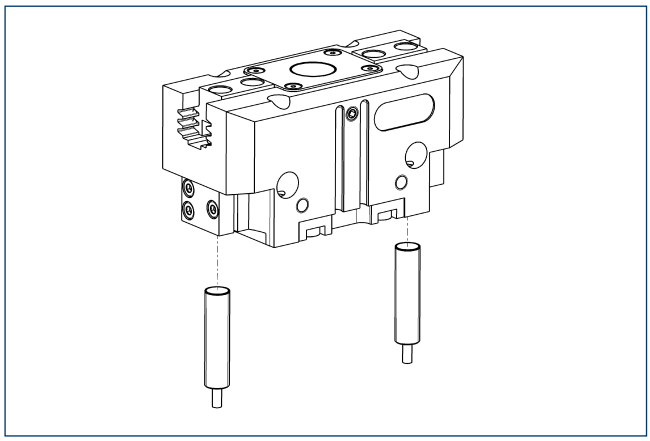

Limit position monitor can be mounted with mounting kit.

Description	ID	
Mounting kit for proximity switch		
AS-RMS 80 PGN/PZN-plus 64/80	0377725	
Reed switches		
RMS 80-S-M8	0377721	

ⓘ Two sensors (closer/S) are required for each unit, plus extension cables as an option. This mounting kit needs to be ordered optionally as an accessory. Two mounting kits are required per gripper. Please note the minimum permitted bending radii for the sensor cables, which are generally 35 mm.

PGB 100

SCHUNK Grippers pneumatic | 2-Finger Parallel Grippers | Universal Gripper

Gripping force, O.D. gripping

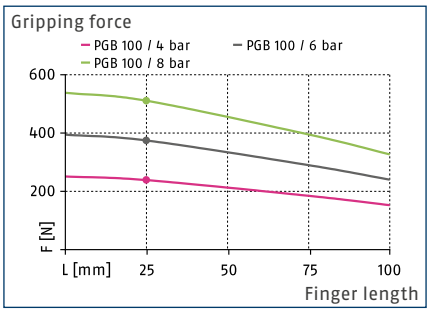

Gripping force, I.D. gripping

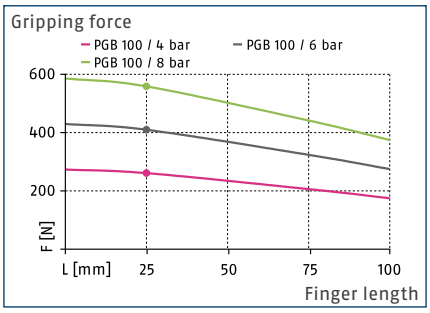

Finger load

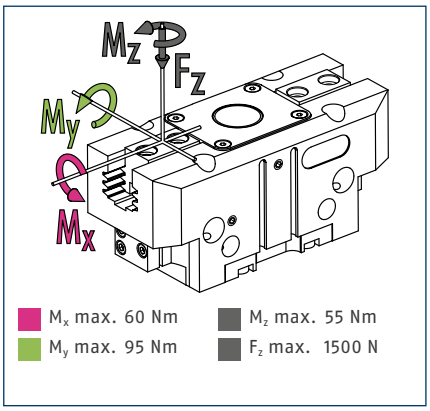

ⓘ The indicated moments and forces are static values, apply per base jaw and may occur simultaneously. M_y may arise in addition to the moment generated by the gripping force itself. If the max. permitted finger weight is exceeded, it is impreative to throttle the air supply so that the jaw movement occurs without any hitting or bouncing. Service life may be reduced.

Technical data

Description		PGB 100
ID		0300366
Stroke per jaw	[mm]	8
Closing- / opening force	[N]	380/410
Weight	[kg]	0.78
Recommended workpiece weight	[kg]	2.1
Fluid consumption per double stroke	[cm³]	22
min. / max. operating pressure	[bar]	2.5/8
Nominal operating pressure	[bar]	6
Closing- / opening time	[s]	0.07/0.07
max. permitted finger length	[mm]	100
max. permitted weight per finger	[kg]	0.6
IP class		40
min. / max. ambient temperature	[°C]	5/90
Repeat accuracy	[mm]	0.01
Diameter of center bore	[mm]	18

Main view

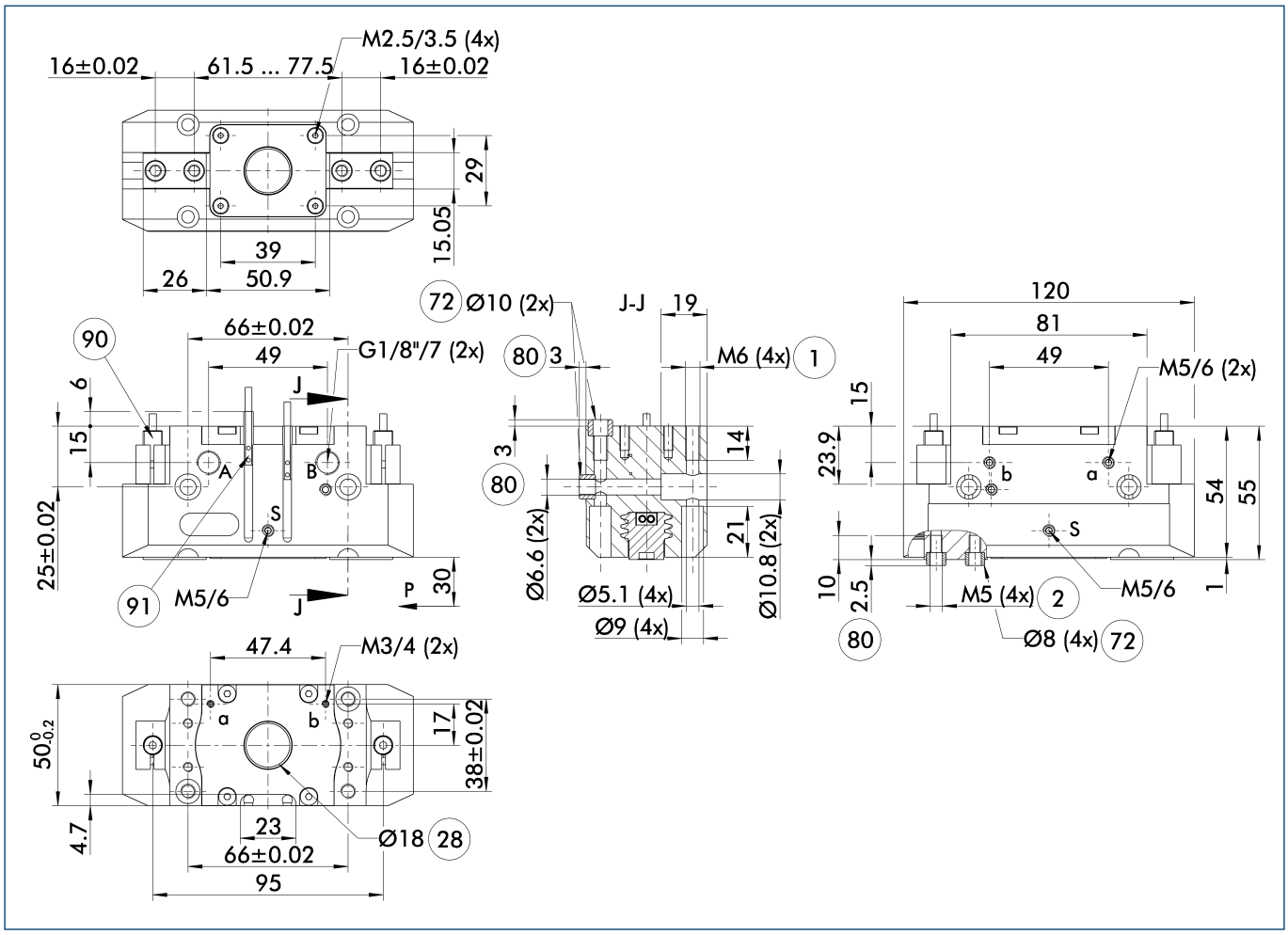

The drawing shows the gripper in the basic version with closed jaws, without dimensional consideration of the options described below.

ⓘ The SDV-P pressure maintenance valve can be used as a gripping force maintenance device (see catalog section on "Accessories").

A, a Main / direct connection, gripper opening

B, b Main / direct connection, gripper closing

S Air purge connection (0.5 ... 1 bar)

(1) Gripper connection

(2) Finger connection

(28) Through-bore

(72) Fit for centering sleeves

(80) Depth of the centering sleeve hole in the mating part

(90) IN ... sensor

(91) MMS 22... sensor

Maximum permitted finger projection

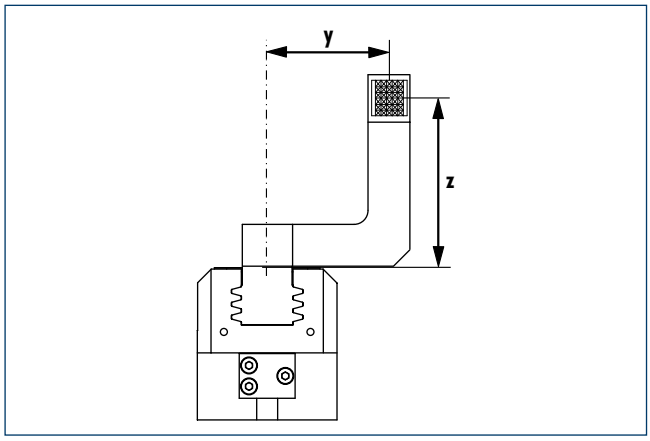

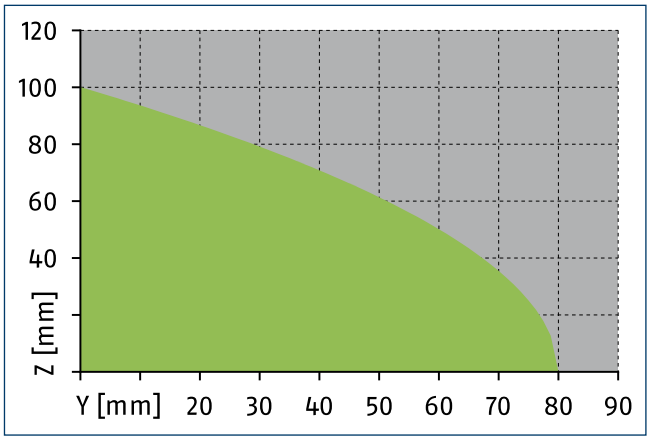

Permitted range

Inadmissible range

The curve applies for the base version (Stroke -1). For other versions, the curve must be offset in parallel corresponding to the max. permissible finger length.

Hose-free direct connection M3

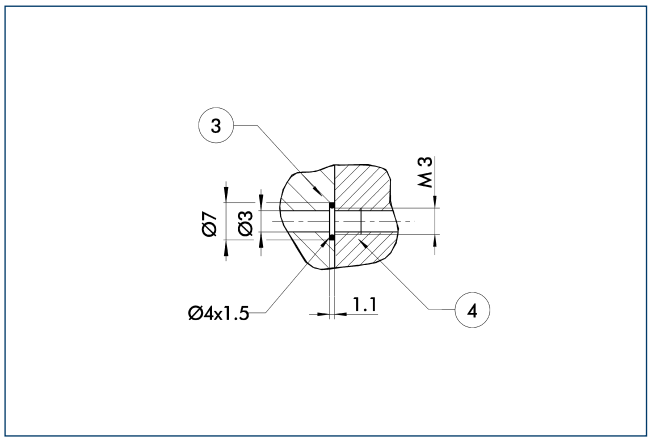

3 Adapter

4 Gripper

The direct connection is used for supplying compressed air without hoses. Instead, the pressure medium is fed through bore-holes in the mounting plate.

SDV-P pressure maintenance valve

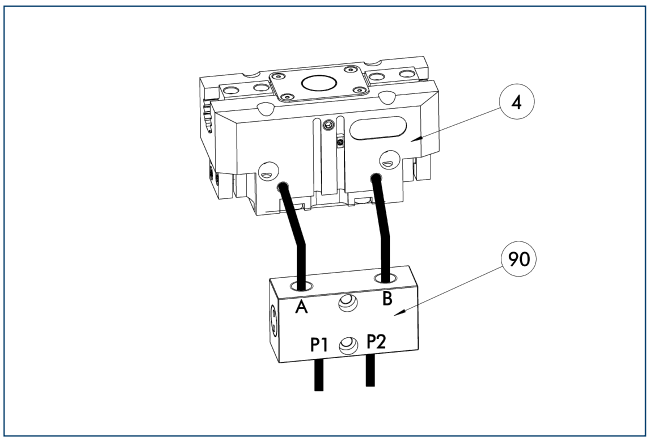

(4) Gripper

(90) SDV-P pressure maintenance valve

The SDV-P pressure maintenance valves ensure that the pressure in the piston chamber of pneumatic gripping, rotary, linear, and quick-change modules is maintained temporarily during an emergency stop.

Description	ID	
Pressure maintenance valve		
SDV-P 04	0403130	

BSWS jaw quick-change systems

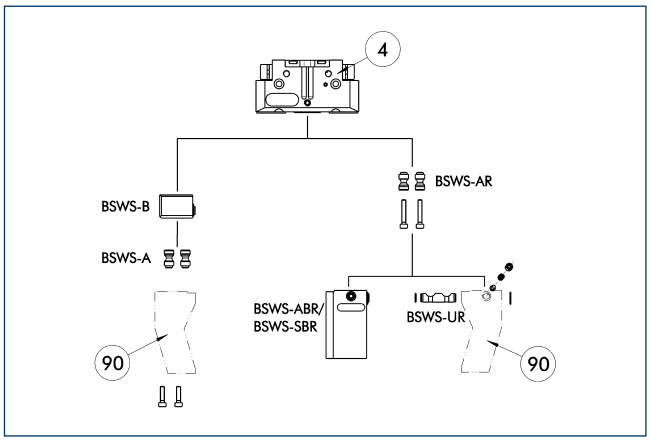

(4) Gripper

(90) Customized gripper fingers

There are various jaw quick-change systems available for the grippers. For detailed information, refer to the appropriate product.

Description	ID	
Jaw quick-change system adapter		
BSWS-AR 80	0300093	
BSWS-A 80	0303024	
Jaw quick-change system base		
BSWS-B 80	0303025	
Finger blanks with jaw quick-change system		
BSWS-ABR-PGZN-plus 80	0300073	
BSWS-SBR-PGZN-plus 80	0300083	
Jaw quick-change system reversed		
BSWS-UR 80	0302992	

ⓘ Only the systems listed in the table can be used.

ZBA L-plus 80 intermediate jaws

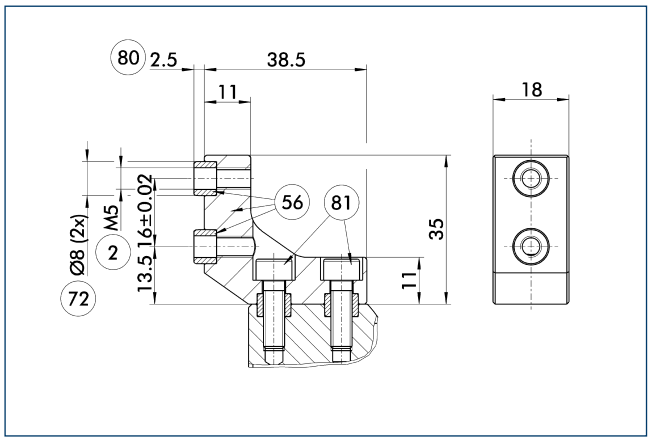

- (2) Finger connection
- (56) Included in delivery
- (72) Fit for centering sleeves
- (80) Depth of the centering sleeve hole in the mating part
- (81) Not included in the scope of delivery

Optionally intermediate jaws can be used, enabling direct connection and alignment of top jaws and various standard accessories in Z-direction.

Description	ID	Material	Scope of delivery
Intermediate jaws			
ZBA-L-plus 80	0311732	Aluminum	1

UZB 80 universal intermediate jaw

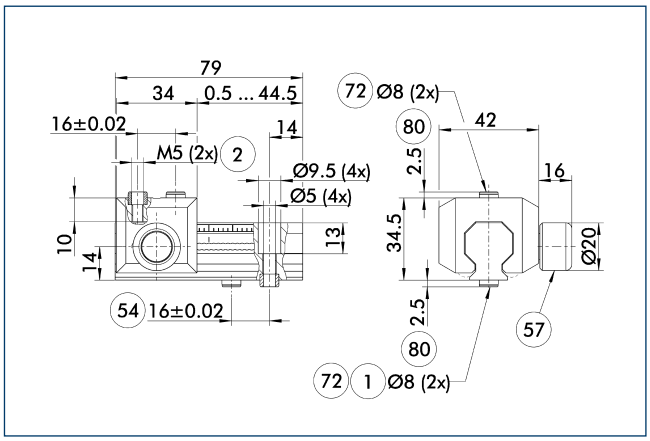

- (1) Gripper connection
- (2) Finger connection
- (54) Optional right or left connection
- (57) Locking
- (72) Fit for centering sleeves
- (80) Depth of the centering sleeve hole in the mating part

The universal intermediate jaw allows fast tool-free and reliable plugging and shifting of top jaws at the gripper.

Description	ID	Grid dimension [mm]
Universal intermediate jaw		
UZB 80	0300043	2
UZB-S 80	5518271	2
Finger blanks		
ABR-PGZN-plus 80	0300011	
SBR-PGZN-plus 80	0300021	

FMS-ZBA / ZBP 80 force-measuring jaws

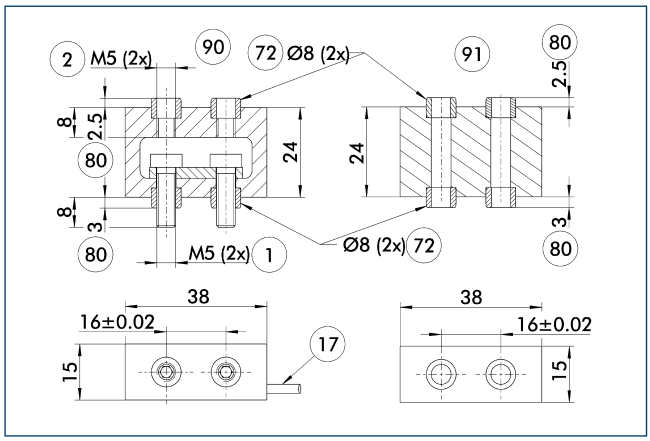

1 Gripper connection
2 Finger connection
17 Cable outlet
72 Fit for centering sleeves
80 Depth of the centering sleeve hole in the mating part
90 Active intermediate jaws
91 Passive intermediate jaws

Force measuring jaws measure gripping forces, but can also determine workpiece weights or dimensional deviations. There are active and passive intermediate jaws (FMS-ZBA or FMS-ZBP). At least one active force measuring jaw is required per gripper, the rest can be passive. For each active jaw, a FMS-A control unit and a FMS-AK connection cable are required.

Description	ID	Often combined
Active intermediate jaws		
FMS-ZBA 80	0301834	
Passive intermediate jaws		
FMS-ZBP 80	0301835	
Connection cables		
FMS-AK0200	0301820	●
FMS-AK0500	0301821	
FMS-AK1000	0301822	
FMS-AK2000	0301823	
Electronic processor		
FMS-A1	0301810	

ABR- / SBR-PGZN-plus 80 finger blanks

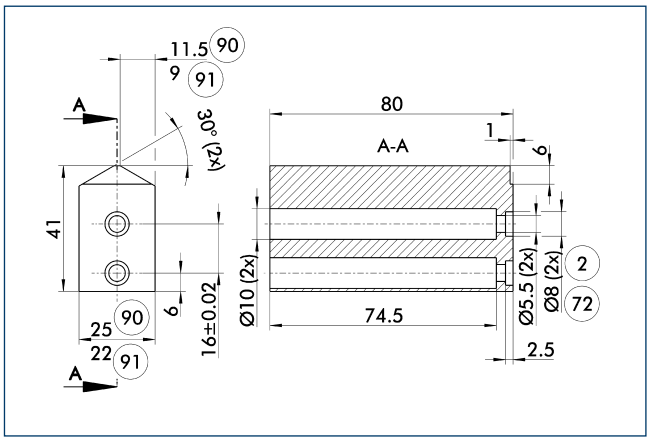

2 Finger connection
72 Fit for centering sleeves
90 ABR-PGZN-plus
91 SBR-PGZN-plus

Finger blanks for customized subsequent machining.

Description	ID	Material	Scope of delivery
Finger blanks			
ABR-PGZN-plus 80	0300011	Aluminum	1
SBR-PGZN-plus 80	0300021	16MnCr5	1

VB-PGN-plus 100 valve box

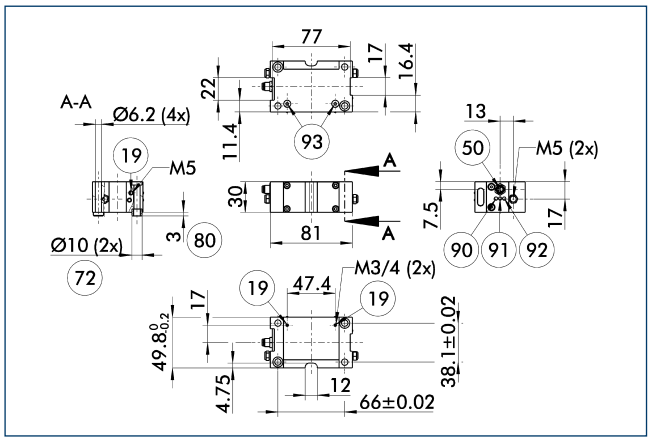

- 19 Air connection
- 50 Electrical connection
- 72 Fit for centering sleeves
- 80 Depth of the centering sleeve hole in the mating part
- 90 Voltage status indicator
- 91 Valve switched b for gripper opened
- 92 Valve switched a for gripper opened
- 93 Valve connection a and b

Description	ID	
Valve box		
VB-PGN-plus 100	0310094	

Valve box

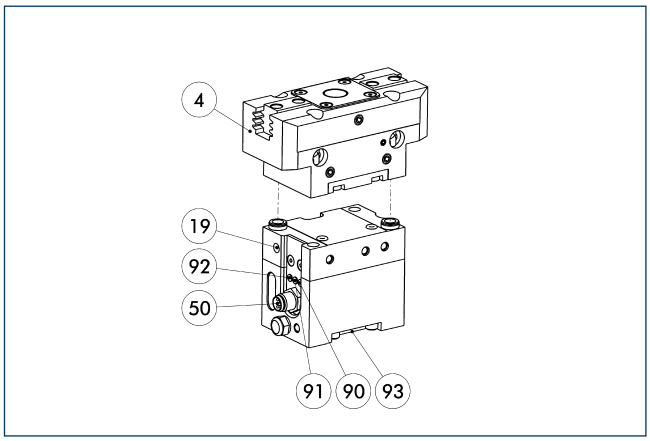

- 4 Gripper
- 19 Air connection
- 50 Electrical connection
- 90 Power supply
- 91 Valve switched b for gripper opened
- 92 Valve switched a for gripper opened
- 93 Direct connection for hose-free compressed air supply

Ready to install, local control solution! Valves are attached directly to the handling component. As a result, cycle times are significantly reduced and the number of hoses, commissioning times, and air consumption are minimised while maximum process safety is assured.

Description	ID	Often combined
Valve box		
VB-PGN-plus 100	0310094	
Connection cables		
KA BG08-L 4P-0500	0307767	●
KA BG08-L 4P-1000	0307768	
KA BW08-L 4P-0500	0307765	
KA BW08-L 4P-1000	0307766	
KA BG08-L 3P-0300-PNP	0301622	●
KA BG08-L 3P-0500-PNP	0301623	
KA BW08-L 3P-0300-NPN	0301602	
KA BW08-L 3P-0300-PNP	0301594	
KA BW08-L 3P-0500-NPN	9641116	
KA BW08-L 3P-0500-PNP	0301502	
Sensor distributor		
V2-M8-4P-2XM8-3P	0301380	
Cable extensions		
KV BW08-SG08 3P-0030-PNP	0301495	
KV BW08-SG08 3P-0100-PNP	0301496	
KV BW08-SG08 3P-0200-PNP	0301497	●
Clip for plug / socket		
CLI-M8	0301463	

ⓘ Valve and sensor signals of the unit can be merged on a bus distributor so that the electrical as well as the pneumatic connections can be decentralized.

Inductive proximity switches

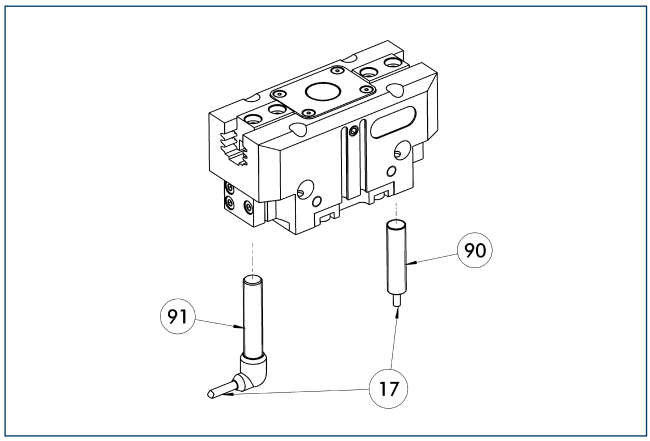

(17) Cable outlet
(90) IN ... sensor
(91) IN ...-SA sensor

Directly mounted limit position monitor.

Description	ID	Often combined
Inductive proximity switches		
IN 80-S-M12	0301578	
IN 80-S-M8	0301478	●
INK 80-S	0301550	
Inductive proximity switches with lateral outlet		
IN 80-S-M12-SA	0301587	
IN 80-S-M8-SA	0301483	●
INK 80-S-SA	0301566	
Cable extensions		
KV BG12-SG12 3P-0030-PNP	0301999	
KV BG12-SG12 3P-0060-PNP	0301998	
KV BW08-SG08 3P-0030-PNP	0301495	
KV BW08-SG08 3P-0100-PNP	0301496	
KV BW08-SG08 3P-0200-PNP	0301497	●
KV BW12-SG12 3P-0030-PNP	0301595	
KV BW12-SG12 3P-0100-PNP	0301596	
KV BW12-SG12 3P-0200-PNP	0301597	
Clip for plug / socket		
CLI-M12	0301464	
CLI-M8	0301463	
Connection cables		
KA BG08-L 3P-0300-PNP	0301622	●
KA BG08-L 3P-0500-PNP	0301623	
KA BG12-L 3P-0500-PNP	30016369	
KA BW08-L 3P-0300-PNP	0301594	
KA BW08-L 3P-0500-PNP	0301502	
KA BW12-L 3P-0300-PNP	0301503	
KA BW12-L 3P-0500-PNP	0301507	
Sensor distributor		
V2-M8	0301775	●
V2-M12	0301776	●
V4-M12	0301747	
V4-M8	0301746	

ⓘ Two sensors (closer/S) are required for each unit, plus extension cables as an option. Please note the minimum permitted bending radii for the sensor cables, which are generally 35 mm.

Flexible position sensor

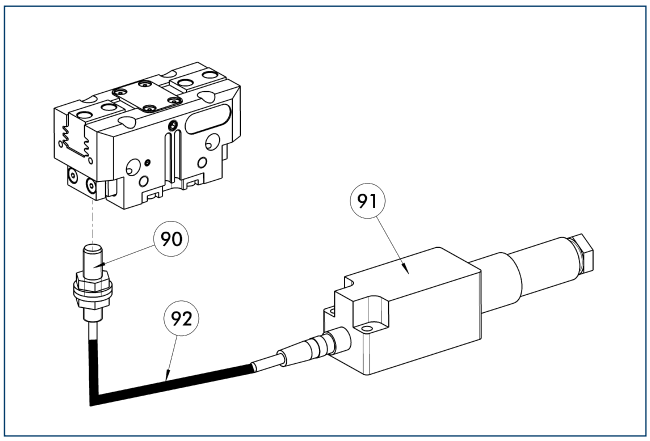

(90) FPS-S sensor
(91) FPS-F5 / -F5 T electronic processor
(92) Cable extensions

Flexible position monitoring of up to five positions.

Description	ID	Often combined
Mounting kit for FPS		
AS-FPS-PGZN-plus 80-1/PZB 80/PZB 100	0301632	
Electronic processor		
FPS-F5 T	0301807	
FPS-F5	0301805	●
Sensor		
FPS-S M8	0301704	
Clip for plug / socket		
CLI-M8	0301463	

ⓘ When using a FPS system, a FPS sensor (FPS-S) and a control unit (FPS-F5 / F5 T) are required for each gripper as well as a mounting kit (AS), if listed. Cable extensions (KV) are available as options in the "Accessories" catalog section.

MMS electronic magnetic switches

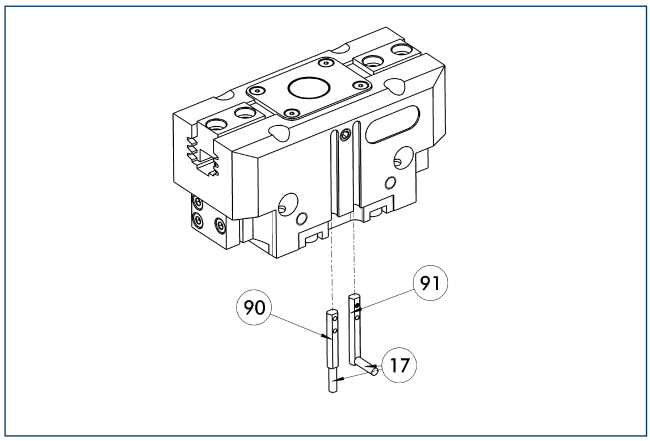

(17) Cable outlet
(91) MMS 22...-SA sensor
(90) MMS 22... sensor

End position monitoring for mounting in the C-slot.

Description	ID	Often combined
MMS electronic magnetic switches		
MMS 22-S-M8-PNP	0301032	●
MMSK 22-S-PNP	0301034	
MMS electronic magnetic switches with lateral cable outlet		
MMS 22-S-M8-PNP-SA	0301042	●
MMSK 22-S-PNP-SA	0301044	
Cable extensions		
KV BW08-SG08 3P-0030-PNP	0301495	
KV BW08-SG08 3P-0100-PNP	0301496	
KV BW08-SG08 3P-0200-PNP	0301497	●
Clip for plug / socket		
CLI-M8	0301463	
Connection cables		
KA BG08-L 3P-0300-PNP	0301622	●
KA BG08-L 3P-0500-PNP	0301623	
KA BW08-L 3P-0300-PNP	0301594	
KA BW08-L 3P-0500-PNP	0301502	
Sensor distributor		
V2-M8	0301775	●
V4-M8	0301746	
V8-M8	0301751	

ⓘ Two sensors (closer/S) are required for each unit, plus extension cables as an option. Please note the minimum permitted bending radii for the sensor cables, which are generally 35 mm.

MMS PI1 programmable magnetic switches

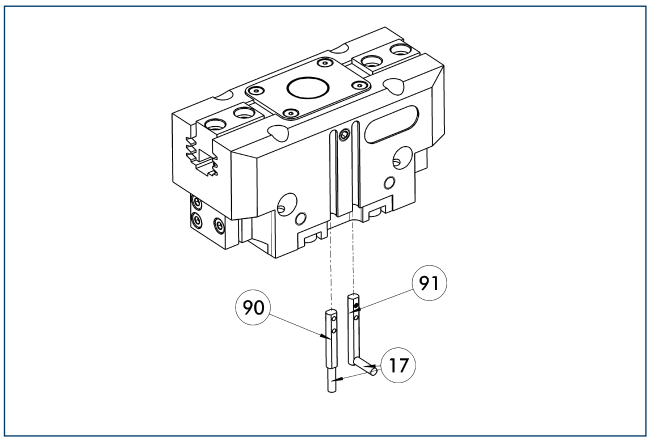

(17) Cable outlet
(91) MMS 22...-PI1-...-SA sensor
(90) MMS 22...-PI1-... sensor

Position query with one programmable position per sensor and electronics integrated in sensor. Programmable via MT magnet teaching tool (included in the scope of delivery) or ST plug teaching tool (optional). Limit position query mounted in C-groove. If the ST plug teaching tools are listed in the table, teaching can only take place with the ST plug teaching tools.

Description	ID	Often combined
MMS PI1 programmable magnetic switches		
MMS 22-PI1-S-M8-PNP	0301160	●
MMSK 22-PI1-S-PNP	0301162	
MMS PI1-HD programmable magnetic switches with stainless steel housing		
MMS 22-PI1-S-M8-PNP-HD	0301110	●
MMSK 22-PI1-S-PNP-HD	0301112	
MMS PI1 programmable magnetic switches with lateral cable outlet		
MMS 22-PI1-S-M8-PNP-SA	0301166	●
MMSK 22-PI1-S-PNP-SA	0301168	

ⓘ Two sensors (closer/S) are required for each unit, plus extension cables as an option. Please note the minimum permitted bending radii for the sensor cables, which are generally 35 mm. Connection cable, cable extensions, and sensor distributors can be found in the table for the MMS 22.

MMS PI2 programmable magnetic switches

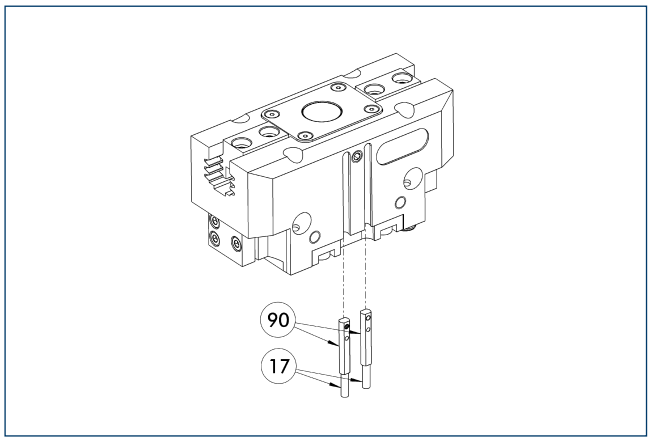

(17) Cable outlet (90) MMS 22...-PI2-... sensor

Position query with two programmable positions per sensor and electronics integrated in sensor. Programmable via MT magnet teaching tool (included in the scope of delivery) or ST plug teaching tool (optional). Limit position query mounted in C-groove. If the ST plug teaching tools are listed in the table, teaching can only take place with the ST plug teaching tools.

Description	ID	Often combined
MMS PI2 programmable magnetic switches		
MMS 22-PI2-S-M8-PNP	0301180	●
MMSK 22-PI2-S-PNP	0301182	
MMS PI2-HD programmable magnetic switches with stainless steel housing		
MMS 22-PI2-S-M8-PNP-HD	0301130	●
MMSK 22-PI2-S-PNP-HD	0301132	

ⓘ Per unit one sensor (closer/S) is required, optionally a cable extension. Please note the minimum permitted bending radii for the sensor cables, which are generally 35 mm. Connection cable, cable extensions, and sensor distributors can be found in the table for the MMS-P 22.

MMS-P programmable magnetic switches

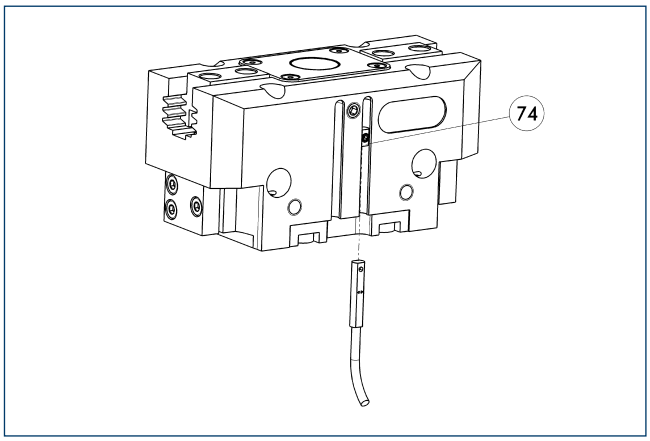

(74) Stop for MMS-P

Position monitoring with two programmable positions per sensor. The end position monitoring is mounted in the C-slot.

Description	ID	Often combined
MMS-P programmable magnetic switches		
MMSK-P 22-S-PNP	0301371	
MMS-P 22-S-M8-PNP	0301370	●
Clip for plug / socket		
CLI-M8	0301463	
Connection cables		
KA BG08-L 4P-0500	0307767	●
KA BG08-L 4P-1000	0307768	
KA BW08-L 4P-0500	0307765	
KA BW08-L 4P-1000	0307766	
Sensor distributor		
V2-M8-4P-2XM8-3P	0301380	

ⓘ Per unit one sensor (closer/S) is required, optionally a cable extension. Please note the minimum permitted bending radii for the sensor cables, which are generally 35 mm.

APS-Z80 analog position sensor

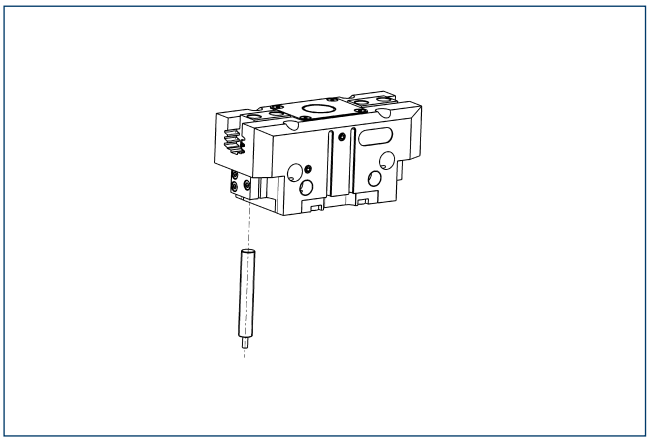

Contactlessly measuring, analog multi-position monitoring for any number of positions.

Description	ID	Often combined
Mounting kit for APS-Z80		
AS-APS-Z80-PGZN-plus 80-1	0302107	
Sensor		
APS-Z80-K	0302072	
APS-Z80-M8	0302070	●

ⓘ When using an APS system, one mounting kit (AS-APS-Z80) and one APS-Z80 sensor is required per gripper.

APS-M1 analog position sensor

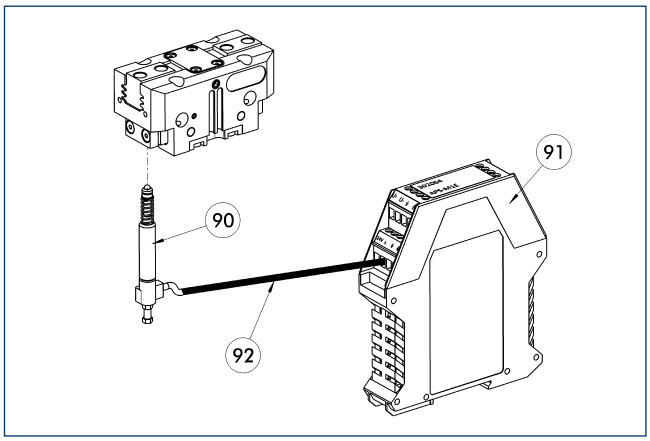

90 APS-M1S sensor
91 APS-M1E electronic processor
92 APS-K extension cable

Analog multi position monitoring for any desired positions.

Description	ID	Often combined
Mounting kit for APS-M1		
AS-APS-M1-PGZN-plus 80-1	0302077	
Connection cables		
APS-K0200	0302066	●
APS-K0700	0302068	
Electronic processor		
APS-M1E	0302064	
Sensor		
APS-M1S	0302062	

ⓘ When using an APS system, for each gripper a mounting kit (AS-APS-M1), an APS-M1S sensor (incl. 3 m cable) as well as an electronics (APS-M1e) are required. An extension cable (APS-K) can be connected between the sensor and the electronics as an option. The max. cable length between the sensor and the electronics is 10 m, between the electronics and their control unit (PLC) it is max. 1 m.

Cylindrical reed switches

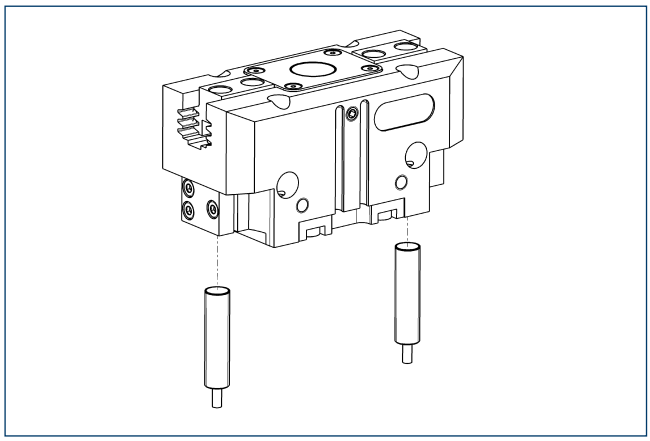

Limit position monitor can be mounted with mounting kit.

Description	ID	
Mounting kit for proximity switch		
AS-RMS 80 PGN/PZN-plus 64/80	0377725	
Reed switches		
RMS 80-S-M8	0377721	

ⓘ Two sensors (closer/S) are required for each unit, plus extension cables as an option. This mounting kit needs to be ordered optionally as an accessory. Two mounting kits are required per gripper. Please note the minimum permitted bending radii for the sensor cables, which are generally 35 mm.

PGB 125

SCHUNK Grippers pneumatic | 2-Finger Parallel Grippers | Universal Gripper

Gripping force, O.D. gripping

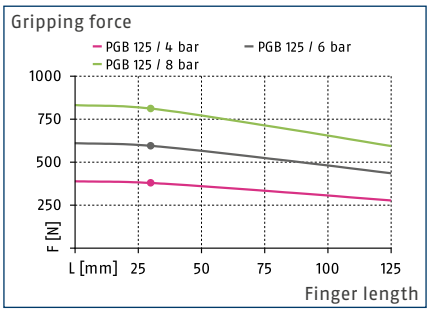

Gripping force, I.D. gripping

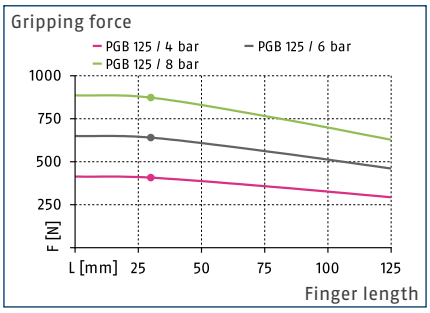

Finger load

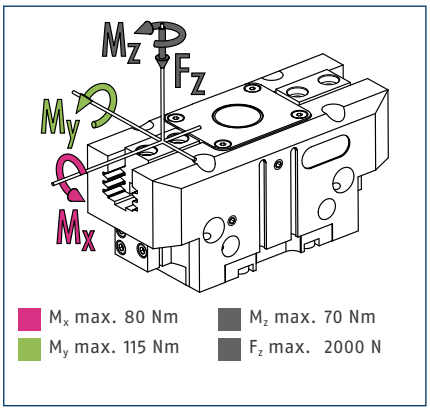

ⓘ The indicated moments and forces are static values, apply per base jaw and may occur simultaneously. M_y may arise in addition to the moment generated by the gripping force itself. If the max. permitted finger weight is exceeded, it is impreative to throttle the air supply so that the jaw movement occurs without any hitting or bouncing. Service life may be reduced.

Technical data

Description		PGB 125
ID		0300369
Stroke per jaw	[mm]	10
Closing- / opening force	[N]	610/640
Weight	[kg]	1.32
Recommended workpiece weight	[kg]	3.3
Fluid consumption per double stroke	[cm³]	32
min. / max. operating pressure	[bar]	2.5/8
Nominal operating pressure	[bar]	6
Closing- / opening time	[s]	0.08/0.08
max. permitted finger length	[mm]	125
max. permitted weight per finger	[kg]	1.1
IP class		40
min. / max. ambient temperature	[°C]	5/90
Repeat accuracy	[mm]	0.01
Diameter of center bore	[mm]	24

Main view

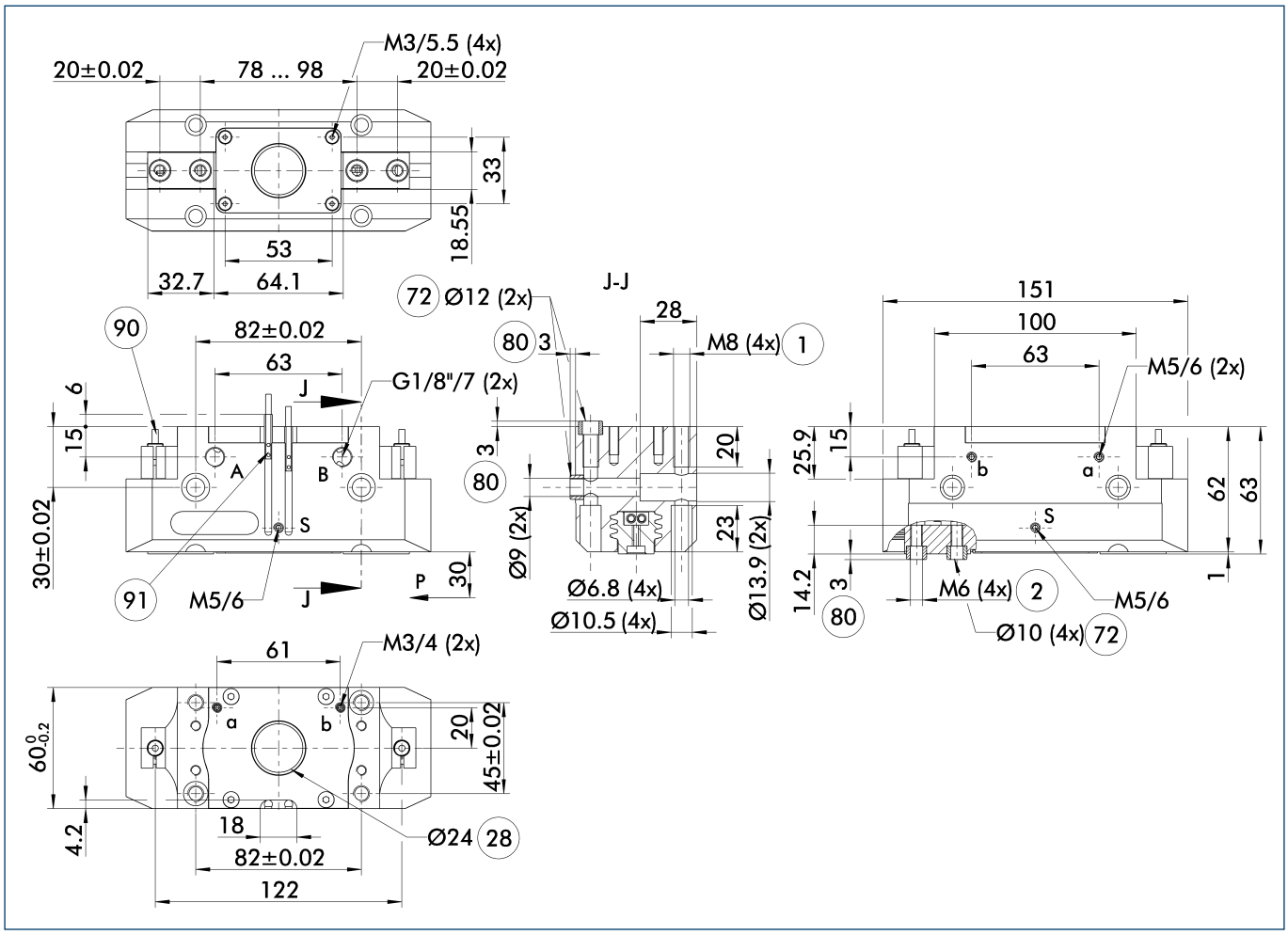

The drawing shows the gripper in the basic version with closed jaws, without dimensional consideration of the options described below.

ⓘ The SDV-P pressure maintenance valve can be used as a gripping force maintenance device (see catalog section on "Accessories").

A, a Main / direct connection, gripper opening

B, b Main / direct connection, gripper closing

S Air purge connection (0.5 ... 1 bar)

(1) Gripper connection

(2) Finger connection

(28) Through-bore

(72) Fit for centering sleeves

(80) Depth of the centering sleeve hole in the mating part

(90) IN ... sensor

(91) MMS 22... sensor

Maximum permitted finger projection

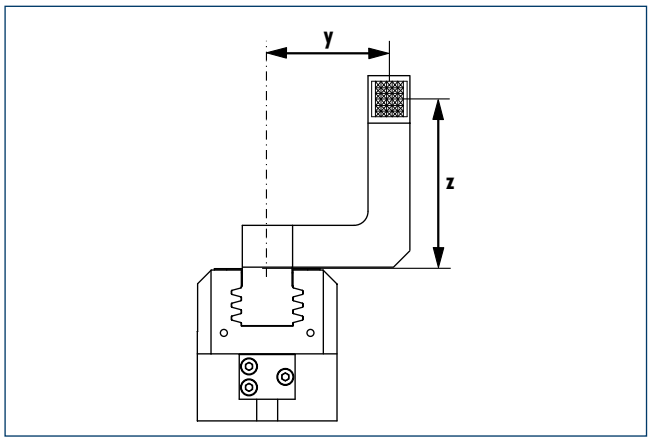

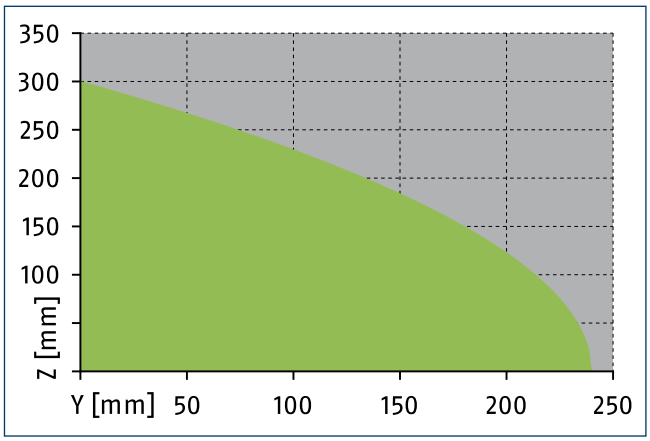

Permitted range

Inadmissible range

The curve applies for the base version (Stroke -1). For other versions, the curve must be offset in parallel corresponding to the max. permissible finger length.

Hose-free direct connection M5

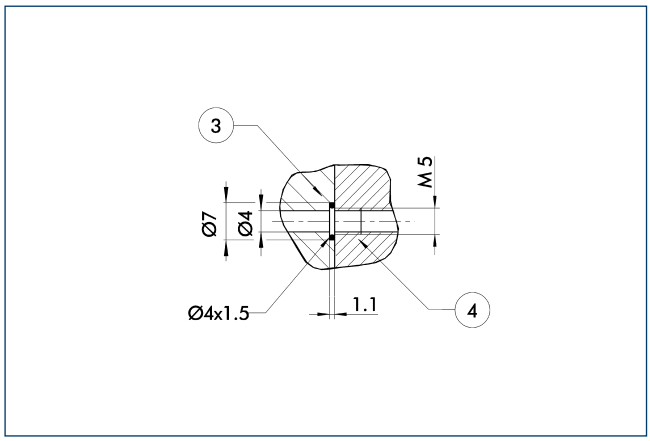

(3) Adapter (4) Gripper

The direct connection is used for supplying compressed air without hoses. Instead, the pressure medium is fed through bore-holes in the mounting plate.

SDV-P pressure maintenance valve

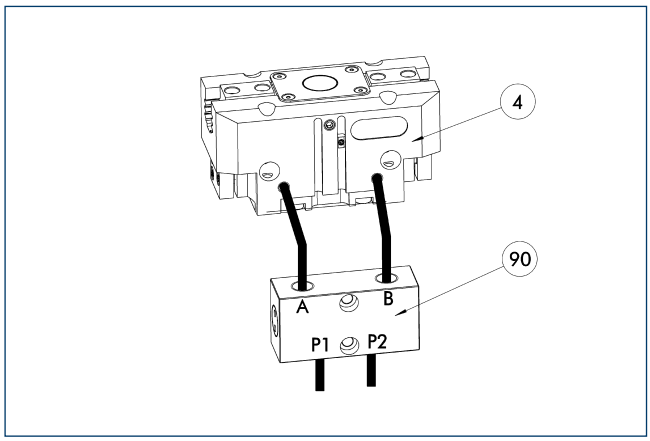

(4) Gripper (90) SDV-P pressure maintenance valve

The SDV-P pressure maintenance valves ensure that the pressure in the piston chamber of pneumatic gripping, rotary, linear, and quick-change modules is maintained temporarily during an emergency stop.

Description	ID	
Pressure maintenance valve		
SDV-P 04	0403130	

BSWS jaw quick-change systems

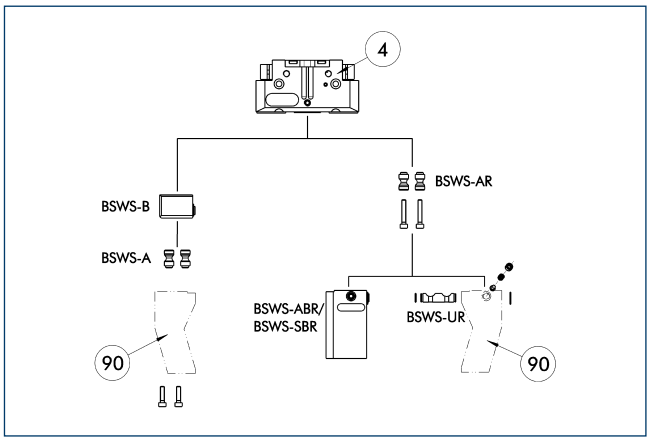

(4) Gripper (90) Customized gripper fingers

There are various jaw quick-change systems available for the grippers. For detailed information, refer to the appropriate product.

Description	ID	
Jaw quick-change system adapter		
BSWS-AR 100	0300094	
BSWS-A 100	0303026	
Jaw quick-change system base		
BSWS-B 100	0303027	
Finger blanks with jaw quick-change system		
BSWS-ABR-PGZN-plus 100	0300074	
BSWS-SBR-PGZN-plus 100	0300084	
Jaw quick-change system reversed		
BSWS-UR 100	0302993	

ⓘ Only the systems listed in the table can be used.

ZBA L-plus 100 intermediate jaws

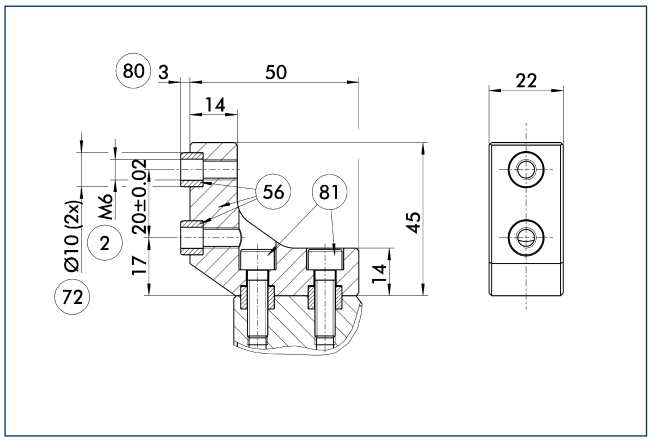

(2) Finger connection
(56) Included in delivery
(72) Fit for centering sleeves
(80) Depth of the centering sleeve hole in the mating part
(81) Not included in the scope of delivery

Optionally intermediate jaws can be used, enabling direct connection and alignment of top jaws and various standard accessories in Z-direction.

Description	ID	Material	Scope of delivery
Intermediate jaws			
ZBA-L-plus 100	0311742	Aluminum	1

UZB 100 universal intermediate jaw

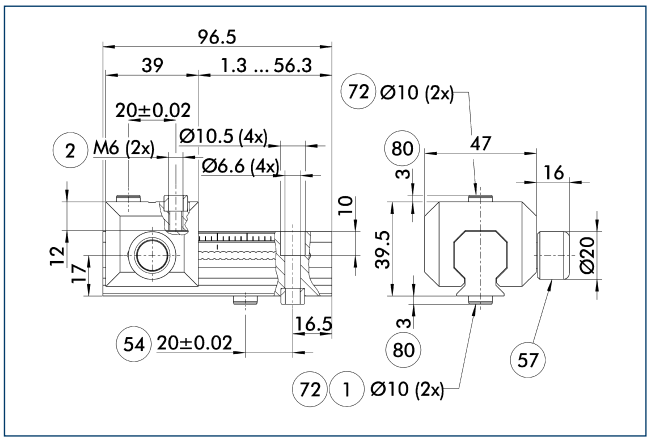

(1) Gripper connection
(2) Finger connection
(54) Optional right or left connection
(57) Locking
(72) Fit for centering sleeves
(80) Depth of the centering sleeve hole in the mating part

The universal intermediate jaw allows fast tool-free and reliable plugging and shifting of top jaws at the gripper.

Description	ID	Grid dimension [mm]
Universal intermediate jaw		
UZB 100	0300044	2.5
UZB-S 100	5518272	2.5
Finger blanks		
ABR-PGZN-plus 100	0300012	
SBR-PGZN-plus 100	0300022	

FMS-ZBA / ZBP 100 force-measuring jaws

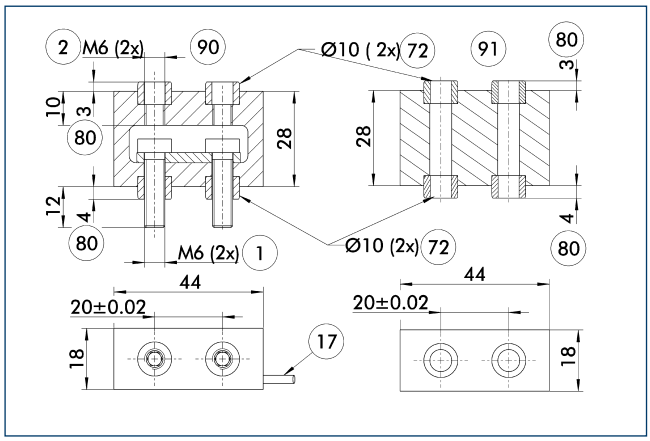

1 Gripper connection
2 Finger connection
17 Cable outlet
72 Fit for centering sleeves
80 Depth of the centering sleeve hole in the mating part
90 Active intermediate jaws
91 Passive intermediate jaws

Force measuring jaws measure gripping forces, but can also determine workpiece weights or dimensional deviations. There are active and passive intermediate jaws (FMS-ZBA or FMS-ZBP). At least one active force measuring jaw is required per gripper, the rest can be passive. For each active jaw, a FMS-A control unit and a FMS-AK connection cable are required.

Description	ID	Often combined
Active intermediate jaws		
FMS-ZBA 100	0301836	
Passive intermediate jaws		
FMS-ZBP 100	0301837	
Connection cables		
FMS-AK0200	0301820	●
FMS-AK0500	0301821	
FMS-AK1000	0301822	
FMS-AK2000	0301823	
Electronic processor		
FMS-A1	0301810	

ABR- / SBR-PGZN-plus 100 finger blanks

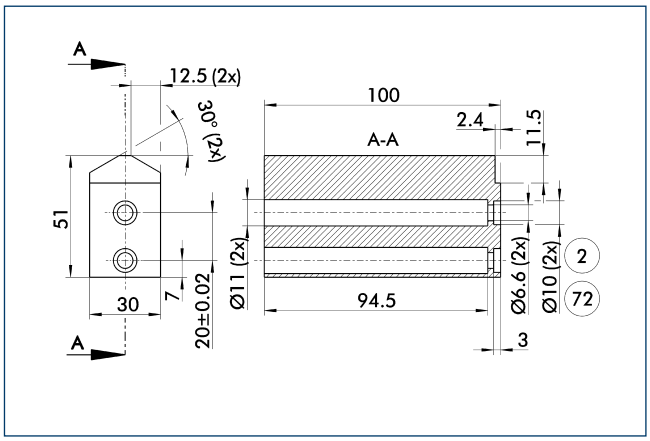

2 Finger connection
72 Fit for centering sleeves

Finger blanks for customized subsequent machining.

Description	ID	Material	Scope of delivery
Finger blanks			
ABR-PGZN-plus 100	0300012	Aluminum	1
SBR-PGZN-plus 100	0300022	16MnCr5	1

Inductive proximity switches

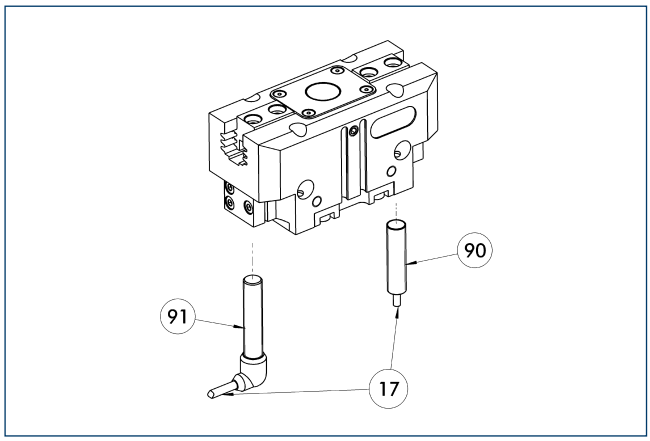

(17) Cable outlet
(90) IN ... sensor
(91) IN ...-SA sensor

Directly mounted limit position monitor.

Description	ID	Often combined
Inductive proximity switches		
IN 80-S-M12	0301578	
IN 80-S-M8	0301478	●
INK 80-S	0301550	
Inductive proximity switches with lateral outlet		
IN 80-S-M12-SA	0301587	
IN 80-S-M8-SA	0301483	●
INK 80-S-SA	0301566	
Cable extensions		
KV BG12-SG12 3P-0030-PNP	0301999	
KV BG12-SG12 3P-0060-PNP	0301998	
KV BW08-SG08 3P-0030-PNP	0301495	
KV BW08-SG08 3P-0100-PNP	0301496	
KV BW08-SG08 3P-0200-PNP	0301497	●
KV BW12-SG12 3P-0030-PNP	0301595	
KV BW12-SG12 3P-0100-PNP	0301596	
KV BW12-SG12 3P-0200-PNP	0301597	
Clip for plug / socket		
CLI-M12	0301464	
CLI-M8	0301463	
Connection cables		
KA BG08-L 3P-0300-PNP	0301622	●
KA BG08-L 3P-0500-PNP	0301623	
KA BG12-L 3P-0500-PNP	30016369	
KA BW08-L 3P-0300-PNP	0301594	
KA BW08-L 3P-0500-PNP	0301502	
KA BW12-L 3P-0300-PNP	0301503	
KA BW12-L 3P-0500-PNP	0301507	
Sensor distributor		
V2-M8	0301775	●
V2-M12	0301776	●
V4-M12	0301747	
V4-M8	0301746	

ⓘ Two sensors (closer/S) are required for each unit, plus extension cables as an option. Please note the minimum permitted bending radii for the sensor cables, which are generally 35 mm.

Flexible position sensor

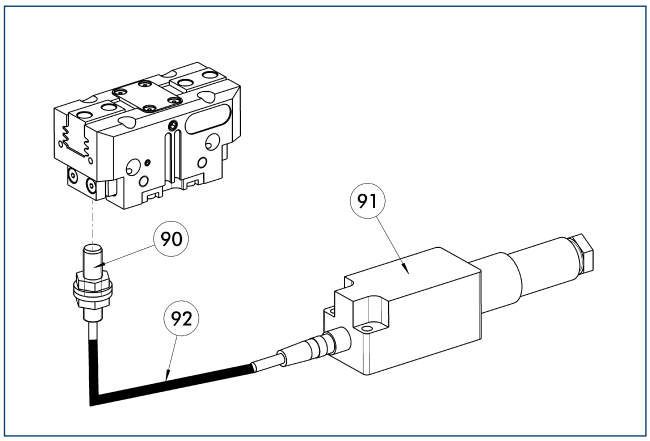

(90) FPS-S sensor
(91) FPS-F5 / -F5 T electronic processor
(92) Cable extensions

Flexible position monitoring of up to five positions.

Description	ID	Often combined
Mounting kit for FPS		
AS-FPS-PGZN-plus 100-1	0301634	
Electronic processor		
FPS-F5 T	0301807	
FPS-F5	0301805	●
Sensor		
FPS-S M8	0301704	
Clip for plug / socket		
CLI-M8	0301463	

ⓘ When using a FPS system, a FPS sensor (FPS-S) and a control unit (FPS-F5 / F5 T) are required for each gripper as well as a mounting kit (AS), if listed. Cable extensions (KV) are available as options in the "Accessories" catalog section.

MMS electronic magnetic switches

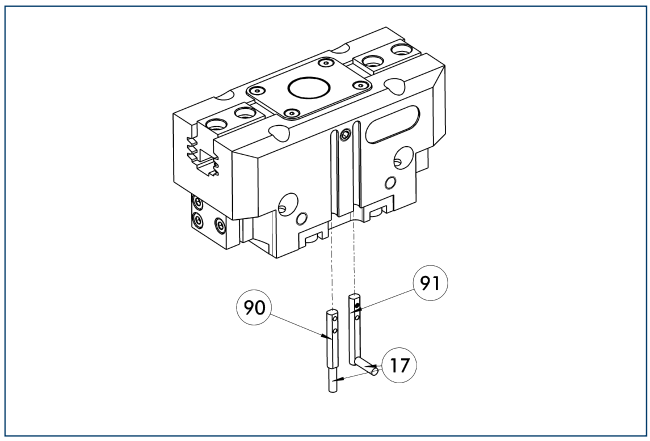

(17) Cable outlet
(91) MMS 22...-SA sensor
(90) MMS 22... sensor

End position monitoring for mounting in the C-slot.

Description	ID	Often combined
MMS electronic magnetic switches		
MMS 22-S-M8-PNP	0301032	●
MMSK 22-S-PNP	0301034	
MMS electronic magnetic switches with lateral cable outlet		
MMS 22-S-M8-PNP-SA	0301042	●
MMSK 22-S-PNP-SA	0301044	
Cable extensions		
KV BW08-SG08 3P-0030-PNP	0301495	
KV BW08-SG08 3P-0100-PNP	0301496	
KV BW08-SG08 3P-0200-PNP	0301497	●
Clip for plug / socket		
CLI-M8	0301463	
Connection cables		
KA BG08-L 3P-0300-PNP	0301622	●
KA BG08-L 3P-0500-PNP	0301623	
KA BW08-L 3P-0300-PNP	0301594	
KA BW08-L 3P-0500-PNP	0301502	
Sensor distributor		
V2-M8	0301775	●
V4-M8	0301746	
V8-M8	0301751	

ⓘ Two sensors (closer/S) are required for each unit, plus extension cables as an option. Please note the minimum permitted bending radii for the sensor cables, which are generally 35 mm.

MMS PI1 programmable magnetic switches

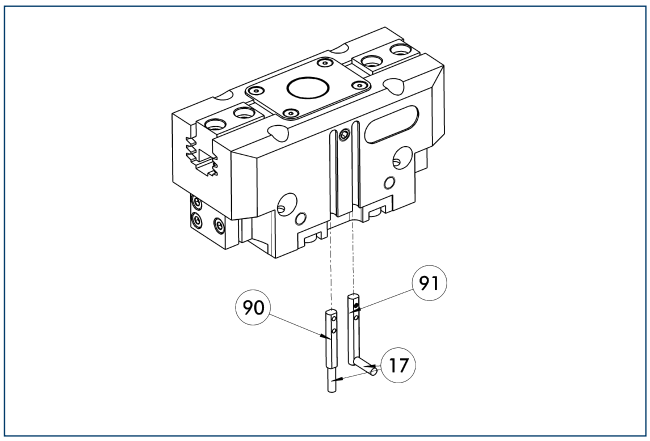

(17) Cable outlet
(91) MMS 22...-PI1-...-SA sensor
(90) MMS 22...-PI1-... sensor

Position query with one programmable position per sensor and electronics integrated in sensor. Programmable via MT magnet teaching tool (included in the scope of delivery) or ST plug teaching tool (optional). Limit position query mounted in C-groove. If the ST plug teaching tools are listed in the table, teaching can only take place with the ST plug teaching tools.

Description	ID	Often combined
MMS PI1 programmable magnetic switches		
MMS 22-PI1-S-M8-PNP	0301160	●
MMSK 22-PI1-S-PNP	0301162	
MMS PI1-HD programmable magnetic switches with stainless steel housing		
MMS 22-PI1-S-M8-PNP-HD	0301110	●
MMSK 22-PI1-S-PNP-HD	0301112	
MMS PI1 programmable magnetic switches with lateral cable outlet		
MMS 22-PI1-S-M8-PNP-SA	0301166	●
MMSK 22-PI1-S-PNP-SA	0301168	

ⓘ Two sensors (closer/S) are required for each unit, plus extension cables as an option. Please note the minimum permitted bending radii for the sensor cables, which are generally 35 mm. Connection cable, cable extensions, and sensor distributors can be found in the table for the MMS 22.

MMS PI2 programmable magnetic switches

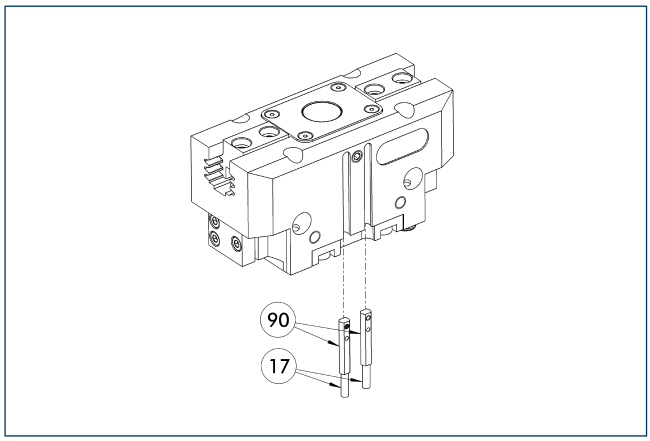

(17) Cable outlet (90) MMS 22...-PI2-... sensor

Position query with two programmable positions per sensor and electronics integrated in sensor. Programmable via MT magnet teaching tool (included in the scope of delivery) or ST plug teaching tool (optional). Limit position query mounted in C-groove. If the ST plug teaching tools are listed in the table, teaching can only take place with the ST plug teaching tools.

Description	ID	Often combined
MMS PI2 programmable magnetic switches		
MMS 22-PI2-S-M8-PNP	0301180	●
MMSK 22-PI2-S-PNP	0301182	
MMS PI2-HD programmable magnetic switches with stainless steel housing		
MMS 22-PI2-S-M8-PNP-HD	0301130	●
MMSK 22-PI2-S-PNP-HD	0301132	

ⓘ Per unit one sensor (closer/S) is required, optionally a cable extension. Please note the minimum permitted bending radii for the sensor cables, which are generally 35 mm. Connection cable, cable extensions, and sensor distributors can be found in the table for the MMS-P 22.

MMS-P programmable magnetic switches

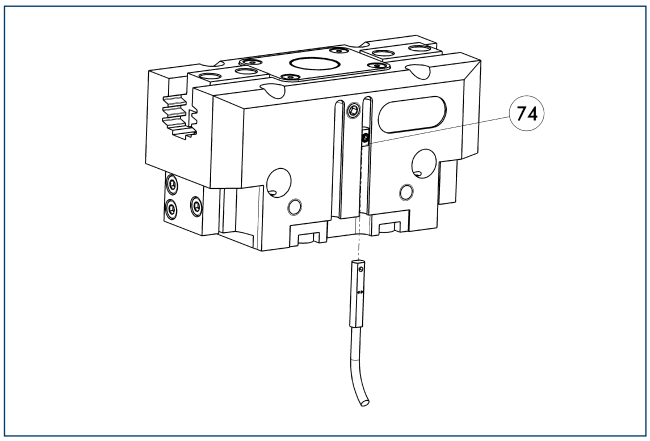

(74) Stop for MMS-P

Position monitoring with two programmable positions per sensor. The end position monitoring is mounted in the C-slot.

Description	ID	Often combined
MMS-P programmable magnetic switches		
MMSK-P 22-S-PNP	0301371	
MMS-P 22-S-M8-PNP	0301370	●
Clip for plug / socket		
CLI-M8	0301463	
Connection cables		
KA BG08-L 4P-0500	0307767	●
KA BG08-L 4P-1000	0307768	
KA BW08-L 4P-0500	0307765	
KA BW08-L 4P-1000	0307766	
Sensor distributor		
V2-M8-4P-2XM8-3P	0301380	

ⓘ Per unit one sensor (closer/S) is required, optionally a cable extension. Please note the minimum permitted bending radii for the sensor cables, which are generally 35 mm.

APS-Z80 analog position sensor

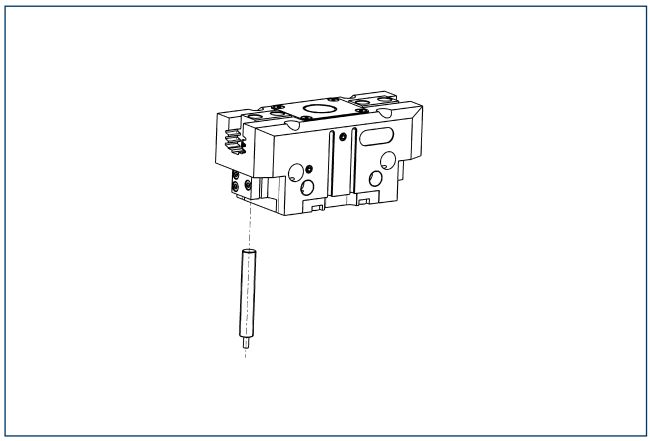

Contactlessly measuring, analog multi-position monitoring for any number of positions.

Description	ID	Often combined
Mounting kit for APS-Z80		
AS-APS-Z80-PGZN-plus 100-1	0302109	
Sensor		
APS-Z80-K	0302072	
APS-Z80-M8	0302070	●

ⓘ When using an APS system, one mounting kit (AS-APS-Z80) and one APS-Z80 sensor is required per gripper.

APS-M1 analog position sensor

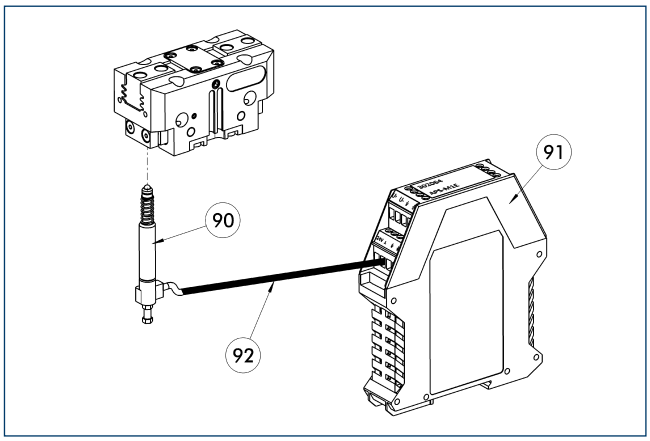

(90) APS-M1S sensor
(91) APS-M1E electronic processor
(92) APS-K extension cable

Analog multi position monitoring for any desired positions.

Description	ID	Often combined
Mounting kit for APS-M1		
AS-APS-M1-PGZN-plus 100-1	0302079	
Connection cables		
APS-K0200	0302066	●
APS-K0700	0302068	
Electronic processor		
APS-M1E	0302064	
Sensor		
APS-M1S	0302062	

ⓘ When using an APS system, for each gripper a mounting kit (AS-APS-M1), an APS-M1S sensor (incl. 3 m cable) as well as an electronics (APS-M1e) are required. An extension cable (APS-K) can be connected between the sensor and the electronics as an option. The max. cable length between the sensor and the electronics is 10 m, between the electronics and their control unit (PLC) it is max. 1 m.

Cylindrical reed switches

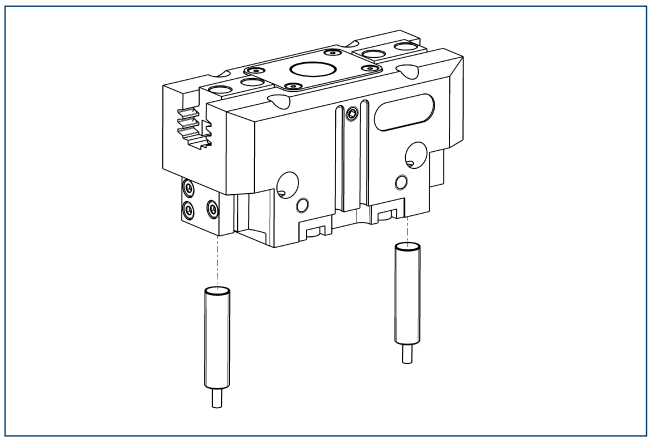

Limit position monitor can be mounted with mounting kit.

Description	ID	
Mounting kit for proximity switch		
AS-RMS 80 PGN/PZN-plus 100/125	0377726	
Reed switches		
RMS 80-S-M8	0377721	

ⓘ Two sensors (closer/S) are required for each unit, plus extension cables as an option. This mounting kit needs to be ordered optionally as an accessory. Two mounting kits are required per gripper. Please note the minimum permitted bending radii for the sensor cables, which are generally 35 mm.

Flexible. Precise. Powerful.

PHL Long-stroke Gripper

Gripper with large jaw stroke for large parts and / or a broad range of parts

Field of Application

Optimal standard solution for many fields of application. Universal application in clean and slightly dirty surroundings in machine building and plant building industry, assembly and handling as well as automotive industry.

Advantages – Your benefit

Modular with two alternative guidances for optimal adaption to your application

High maximum moments possible suitable for using long gripper fingers

Double piston rack and pinion principle for centric clamping

Fastening at one gripper side in two screw directions for universal and flexible gripper assembly

Air supply via hose-free direct connection or screw connections for flexible pressure supply in all automated systems

Comprehensive sensor accessory program for versatile interrogation possibilities and control of stroke position

Stroke versions for highest flexibility

Sizes	Weight	Gripping force	Stroke per jaw	Workpiece weight
Quantity: 5	1.38 .. 24.18 kg	390 .. 4630 N	30 .. 160 mm	1.95 .. 15.5 kg

Functional Description

With the application of pressure to the opposite pistons, the respective base jaw is moved by a driving pin on the piston. The synchronisation of the jaw stroke takes place based on the rack and pinion principle.

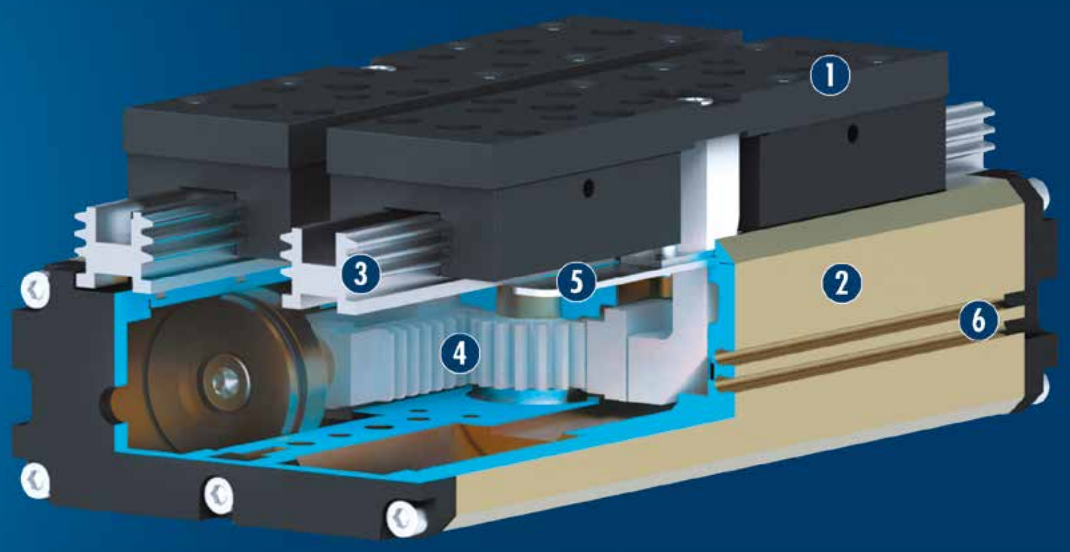

① **Base jaw**
for the connection of workpiece-specific gripper fingers

② **Housing**
Weight-optimized through application of high-strength aluminum alloy

③ **Multiple-tooth guidance**
High-loadable base jaw guidance with minimum play for long fingers

④ **Kinematics**
Pinion and rack principle for centric clamping, even at large strokes

⑤ **Dust cover**
along the whole guidance length against coarse dirt

⑥ **Sensor system**
Brackets for proximity switches and adjustable control cams in the housing

CAD data, operating manuals and other current product documents are available at **www.schunk.com**

General Notes about the Series

Operating principle: Double piston rack and pinion principle

Housing material: Aluminum (extruded profile)

Base jaw material: Aluminum alloy, anodized

Actuation: pneumatic, with filtered compressed air as per DIN ISO 8573-1: 7 4 4

Warranty: 24 months (details, general terms and conditions and operating manuals can be downloaded at www.schunk.com)

Scope of delivery: Centering sleeves, O-rings for direct connection, assembly and operating manual with manufacturer's declaration

Gripping force: is the arithmetic total of the gripping force applied to each gripper jaw at distance P (see illustration).

Finger length: measured from the screw surface of the base jaw in the direction of the main axis. Failure to comply with the max. permissible finger length can lead to increased wear.

Repeat accuracy: is defined as the spread of the limit position after 100 consecutive strokes.

Workpiece weight: is calculated for a force-fit connection with a coefficient of friction of 0.1 and a safety factor of 2 against slippage of the workpiece on acceleration due to gravity g. Considerably heavier workpiece weights are permitted with form-fit gripping.

Closing and opening times: are purely the times that the base jaws or fingers are in motion. Valve switching times, hose filling times or PLC reaction times are not included in the above times and must be taken into consideration when determining cycle times.

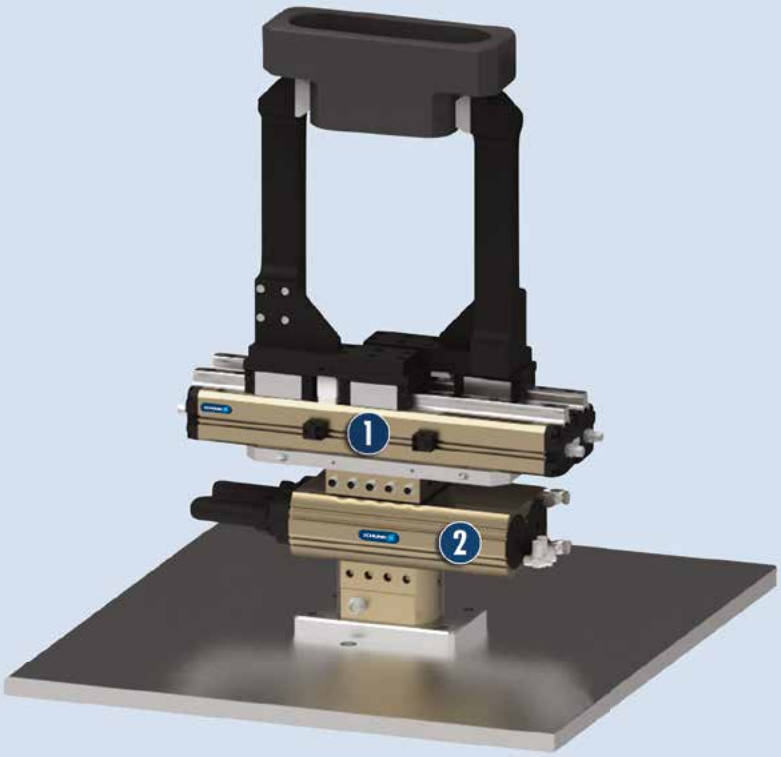

Application example

Reversing unit for the economical reorientation of cubic workpieces

1. PHL 2-Finger Long-stroke Gripper
2. SRU-plus Universal Rotary Actuator

SCHUNK offers more ...

The following components make the product PHL even more productive – the suitable addition for the highest functionality, flexibility, reliability, and controlled production.

Jaw Quick-change System

Universal Intermediate Jaw

Magnetic Switches

Inductive Proximity Switches

Sensor Distributor

Gripper Pads

Sensor Cables

Finger Blanks with Jaw Quick-change System

SPV-P Pressure Maintenance Valve

Fittings

Plastic Inserts

Centering Sleeves

ⓘ Further information regarding the products can be found on the following product pages or at www.schunk.com. Please contact us for further information: SCHUNK technical hotline +49-7133-103-2696

Options and special Information

Sliding bearing version PHL-G: with proven SCHUNK multi-tooth guideway for durable and reliable applications
Roller bearing version PHL-W: with profile rail guides for higher loads and finger lengths while increasing grip force
Mechanical grip force maintenance: acts as a closing force with PHL ...-S versions. Then it can also be converted so that can act as an opening force.
High-temperature version V/HT: for use in hot environments
Additional stroke versions: available in 3 stroke variants as standard
Additional versions: Various options can be combined. Numerous additional options are also available – just tell us what your task is!

PHL 25

SCHUNK Grippers pneumatic | 2-Finger Parallel Grippers | Long-stroke Gripper

Gripping force

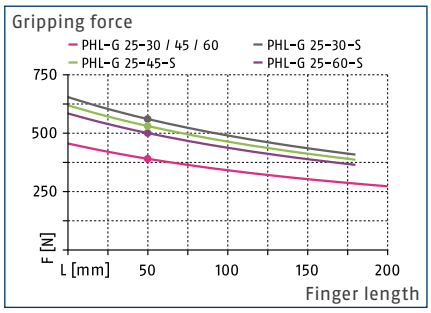

Finger load

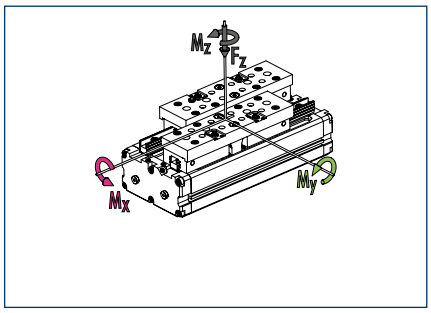

Technical data PHL-G

Description		PHL-G 25-030	PHL-G 25-030-S	PHL-G 25-045	PHL-G 25-045-S	PHL-G 25-060	PHL-G 25-060-S
ID		0308120	0308123	0308121	0308124	0308122	0308125
Stroke per jaw	[mm]	30	30	45	45	60	60
Closing- / opening force	[N]	390/390	560/-	390/390	530/-	390/390	500/-
min. spring force	[N]		170		140		110
Weight	[kg]	1.38	1.63	1.64	2.04	1.9	2.13
Recommended workpiece weight	[kg]	1.95	1.95	1.95	1.95	1.95	1.95
Fluid consumption per double stroke	[cm³]	77	150	107	180	138	210
min. / max. operating pressure	[bar]	2/8	4/6.5	2/8	4/6.5	2/8	4/6.5
Nominal operating pressure	[bar]	6	6	6	6	6	6
Closing- / opening time	[s]	0.12/0.12	0.14/0.31	0.19/0.19	0.18/0.41	0.23/0.23	0.23/0.51
max. permitted finger length	[mm]	200	180	200	180	200	180
max. permitted weight per finger	[kg]	1	1	1	1	1	1
IP class		41	41	41	41	41	41
min. / max. ambient temperature	[°C]	5/90	5/90	5/90	5/90	5/90	5/90
Repeat accuracy	[mm]	0.02	0.02	0.02	0.02	0.02	0.02
Moments M_x max./M_y max./M_z max.	[Nm]	25/130/21	25/130/21	29/130/25	29/130/25	33/130/29	33/130/29
Forces F_z max.	[N]	1800	1800	1800	1800	1800	1800

ⓘ The indicated moments and forces are static values, apply per base jaw and may occur simultaneously. M_y may arise in addition to the moment generated by the gripping force itself. If the max. permitted finger weight is exceeded, it is impreative to throttle the air supply so that the jaw movement occurs without any hitting or bouncing. Service life may be reduced.

Gripping force

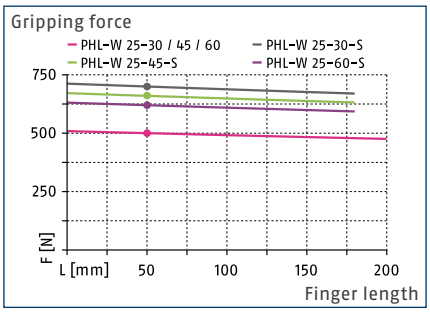

Finger load

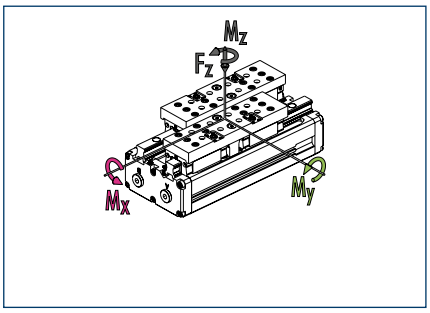

Technical data PHL-W

Description		PHL-W 25-030	PHL-W 25-030-S	PHL-W 25-045	PHL-W 25-045-S	PHL-W 25-060	PHL-W 25-060-S
ID		0308130	0308133	0308131	0308134	0308132	0308135
Stroke per jaw	[mm]	30	30	45	45	60	60
Closing- / opening force	[N]	500/500	700/-	500/500	660/-	500/500	620/-
min. spring force	[N]		200		160		120
Weight	[kg]	1.49	1.72	1.75	2.13	1.92	2.21
Recommended workpiece weight	[kg]	2.5	2.5	2.5	2.5	2.5	2.5
Fluid consumption per double stroke	[cm³]	77	150	107	180	138	210
min. / max. operating pressure	[bar]	2/8	4/6.5	2/8	4/6.5	2/8	4/6.5
Nominal operating pressure	[bar]	6	6	6	6	6	6
Closing- / opening time	[s]	0.11/0.11	0.12/0.27	0.15/0.15	0.16/0.36	0.18/0.18	0.2/0.44
max. permitted finger length	[mm]	200	180	200	180	200	180
max. permitted weight per finger	[kg]	1	1	1	1	1	1
IP class		41	41	41	41	41	41
min. / max. ambient temperature	[°C]	5/90	5/90	5/90	5/90	5/90	5/90
Repeat accuracy	[mm]	0.02	0.02	0.02	0.02	0.02	0.02
Moments M_x max./M_y max./M_z max.	[Nm]	25/120/27	25/120/27	29/120/33	29/120/33	33/120/46	33/120/46
Forces F_z max.	[N]	1000	1000	1000	1000	1000	1000

ⓘ The indicated moments and forces are static values, apply per base jaw and may occur simultaneously. M_y may arise in addition to the moment generated by the gripping force itself. If the max. permitted finger weight is exceeded, it is impreative to throttle the air supply so that the jaw movement occurs without any hitting or bouncing. Service life may be reduced.

PHL 25-030 main view

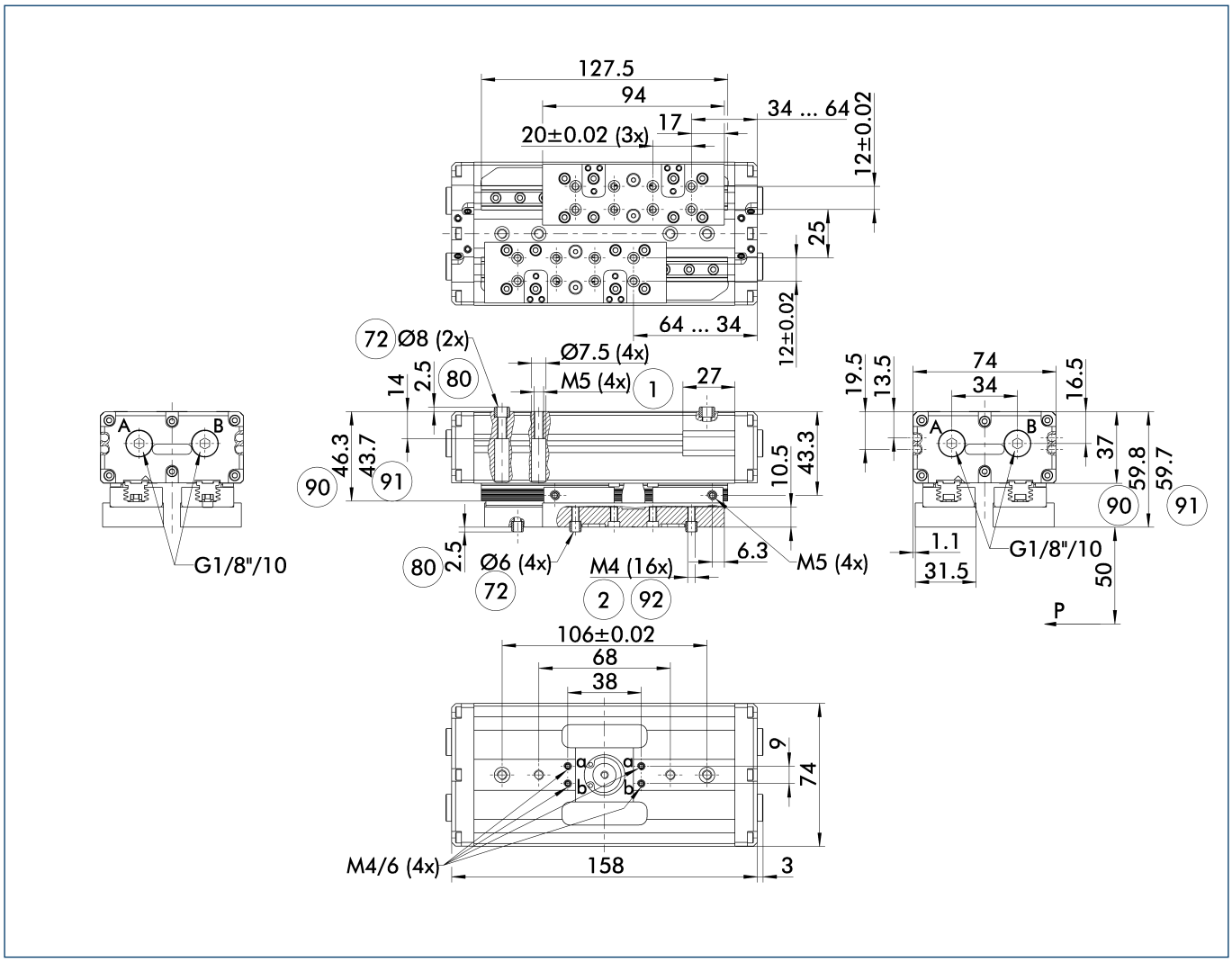

The drawing shows the gripper in the basic version with closed jaws, without dimensional consideration of the options described below.

ⓘ The SDV-P pressure maintenance valve can be used as a gripping force maintenance device (see catalog section on "Accessories").

A, a Main / direct connection, gripper opening

B, b Main / direct connection, gripper closing

(1) Gripper connection

(2) Finger connection

(72) Fit for centering sleeves

(80) Depth of the centering sleeve hole in the mating part

(90) Height of version G

(91) Height of version W

(92) Min. six screws per base jaw

Maximum permitted finger projection

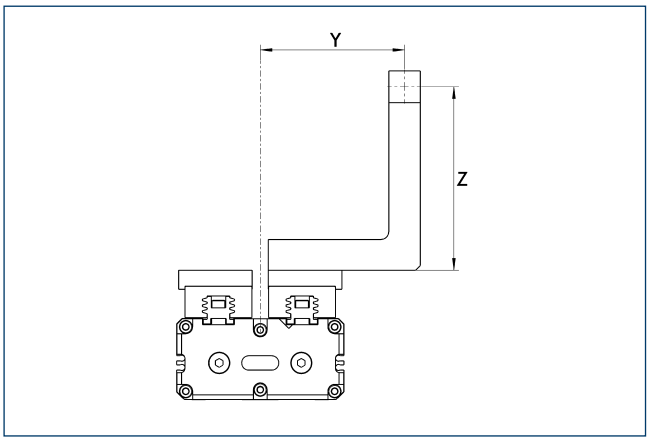

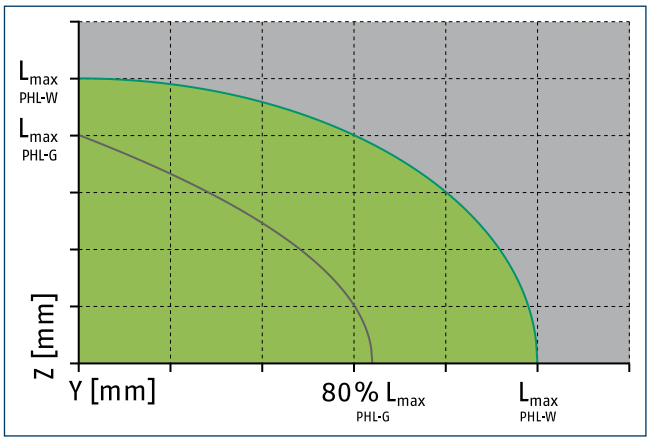

Permitted range Inadmissible range

L_{max} is equivalent to the maximum permitted finger length, see the chart of technical specifications.

Hose-free direct connection M4

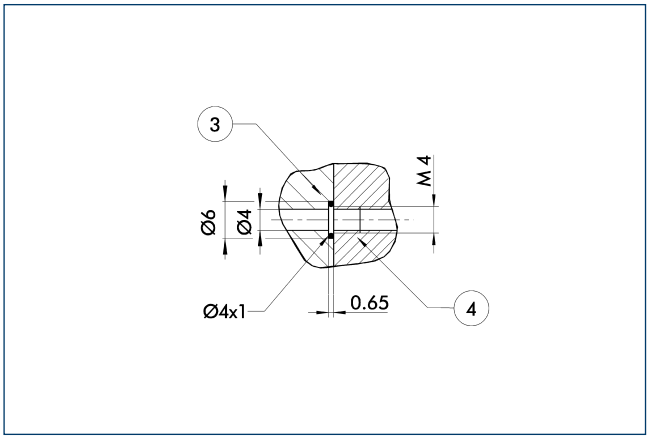

(3) Adapter (4) Gripper

The direct connection is used for supplying compressed air without hoses. Instead, the pressure medium is fed through bore-holes in the mounting plate.

Stroke version PHL 25-045

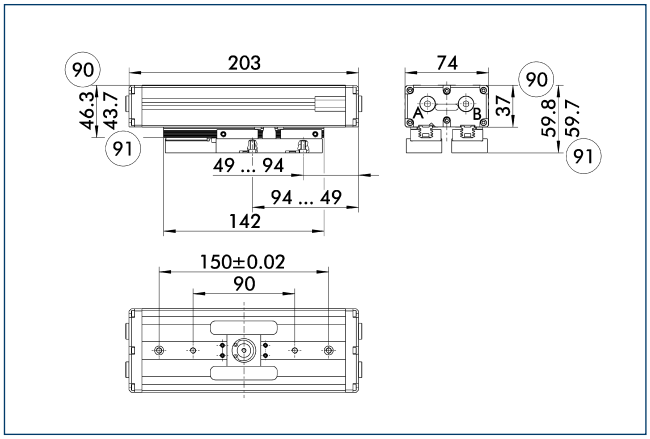

(90) Height of version G (91) Height of version W

The drawing shows changes in dimensions of the versions with a differing stroke compared to the main view of the shown version.

Stroke version PHL 25-060

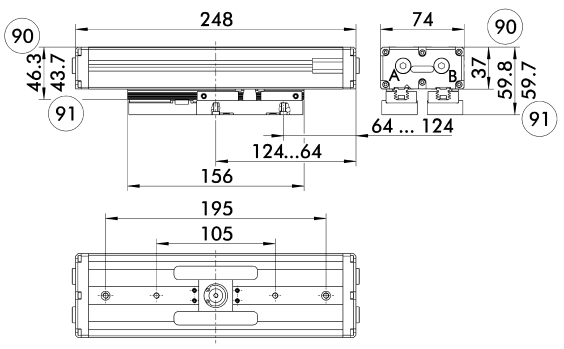

(90) Height of version G

(91) Height of version W

The drawing shows changes in dimensions of the versions with a differing stroke compared to the main view of the shown version.

Gripping force maintenance device S

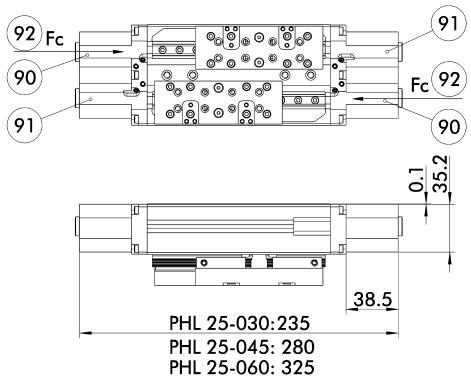

(90) Piston chamber with spring

(91) Piston chamber without spring

(92) Direction of force of the compression springs

The mechanical gripping force maintenance ensures a minimum clamping force even if there is a drop in pressure. This acts as the closing force in the S variant. The design of the top jaws means that they can also be used as an opening force. Besides this, the gripping force maintenance can be used to increase gripping force.

ⓘ The gripper is shown in the basic position, closed by springs.

Intermediate jaw interface

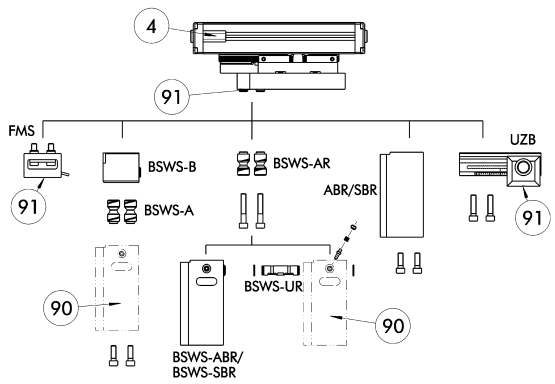

(4) Gripper

(90) Customized gripper fingers

(91) Uniform screw connection pattern

By using the intermediate jaw, you have the possibility of directly connecting a wide range of accessories directly. This includes force measuring jaws, jaw quick-change systems, finger blanks, and universal intermediate jaws.

SDV-P pressure maintenance valve

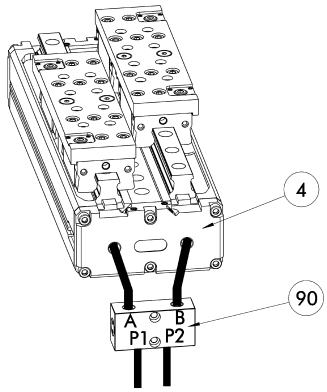

(4) Gripper

(90) SDV-P pressure maintenance valve

The SDV-P pressure maintenance valves ensure that the pressure in the piston chamber of pneumatic gripping, rotary, linear, and quick-change modules is maintained temporarily during an emergency stop.

Description	ID	
Pressure maintenance valve		
SDV-P 04	0403130	

ZBA PHL 25 intermediate jaws

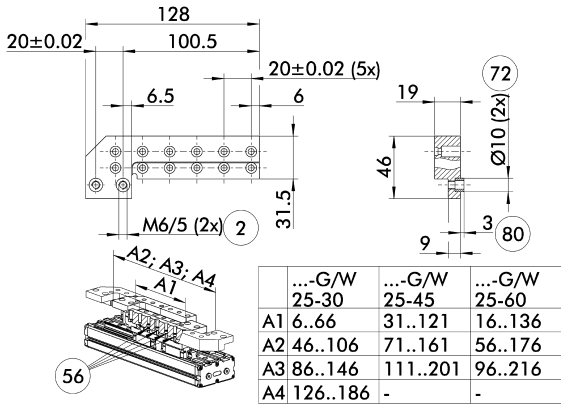

	...-G/W 25-30	...-G/W 25-45	...-G/W 25-60
A1	6..66	31..121	16..136
A2	46..106	71..161	56..176
A3	86..146	111..201	96..216
A4	126..186	-	-

(2) Finger connection
(56) Included in delivery
(72) Fit for centering sleeves
(80) Depth of the centering sleeve hole in the mating part

Optionally intermediate jaws can be used, enabling direct connection and alignment of top jaws and various standard accessories in Z-direction.

Description	ID	Material	Scope of delivery
Intermediate jaws			
ZBA-PHL 25	0308129	Aluminum	2

Mounting kit for proximity switch

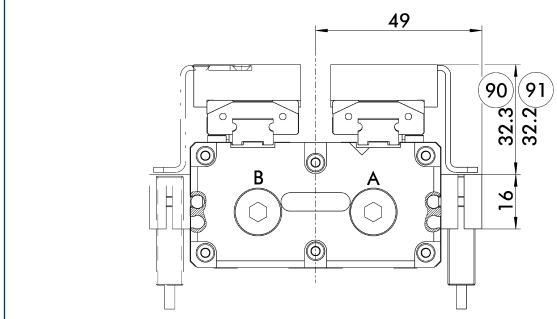

(90) Height of version G
(91) Height of version W

Limit position monitor can be mounted with mounting kit.

Description	ID	
Mounting kit for proximity switch		
AS-PHL025-IN80	0308830	

ⓘ This mounting kit needs to be ordered optionally as an accessory.

Inductive proximity switches

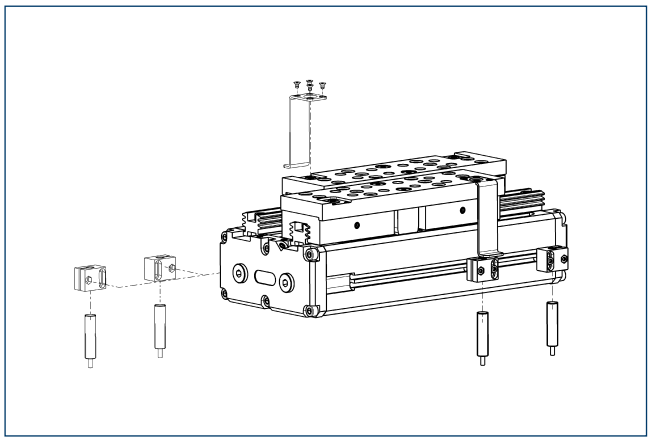

Limit position monitor can be mounted with mounting kit.

Description	ID	Often combined
Mounting kit for proximity switch		
AS-PHL025-IN80	0308830	
Inductive proximity switches		
IN 80-S-M12	0301578	
IN 80-S-M8	0301478	●
INK 80-S	0301550	
Cable extensions		
KV BG12-SG12 3P-0030-PNP	0301999	
KV BG12-SG12 3P-0060-PNP	0301998	
KV BW08-SG08 3P-0030-PNP	0301495	
KV BW08-SG08 3P-0100-PNP	0301496	
KV BW08-SG08 3P-0200-PNP	0301497	●
KV BW12-SG12 3P-0030-PNP	0301595	
KV BW12-SG12 3P-0100-PNP	0301596	
KV BW12-SG12 3P-0200-PNP	0301597	
Clip for plug / socket		
CLI-M12	0301464	
CLI-M8	0301463	
Connection cables		
KA BG08-L 3P-0300-PNP	0301622	●
KA BG08-L 3P-0500-PNP	0301623	
KA BG12-L 3P-0500-PNP	30016369	
KA BW08-L 3P-0300-PNP	0301594	
KA BW08-L 3P-0500-PNP	0301502	
KA BW12-L 3P-0300-PNP	0301503	
KA BW12-L 3P-0500-PNP	0301507	
Sensor distributor		
V2-M8	0301775	●
V2-M12	0301776	●
V4-M12	0301747	
V4-M8	0301746	
V8-M12	0301752	
V8-M8	0301751	

ⓘ Two sensors (closer/S) are required for each unit, plus extension cables as an option. This mounting kit needs to be ordered optionally as an accessory. Please note the minimum permitted bending radii for the sensor cables, which are generally 35 mm.

MMS electronic magnetic switches

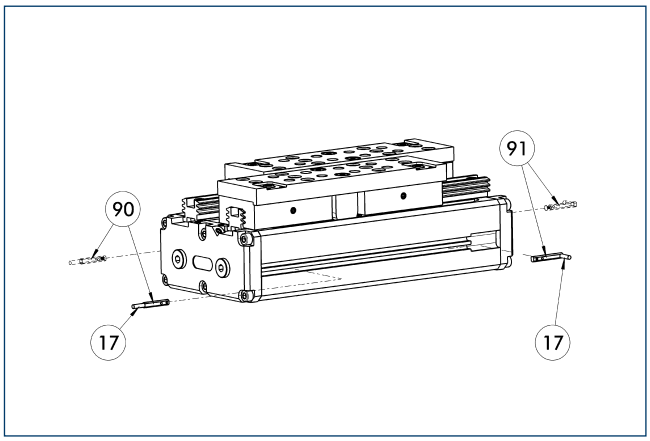

(17) Cable outlet
(91) MMS 22...-SA sensor
(90) MMS 22... sensor

End position monitoring for mounting in the C-slot.

Description	ID	Often combined
MMS electronic magnetic switches		
MMS 22-S-M8-PNP	0301032	●
MMSK 22-S-PNP	0301034	
MMS electronic magnetic switches with lateral cable outlet		
MMS 22-S-M8-PNP-SA	0301042	●
MMSK 22-S-PNP-SA	0301044	
Cable extensions		
KV BW08-SG08 3P-0030-PNP	0301495	
KV BW08-SG08 3P-0100-PNP	0301496	
KV BW08-SG08 3P-0200-PNP	0301497	●
Clip for plug / socket		
CLI-M8	0301463	
Connection cables		
KA BG08-L 3P-0300-PNP	0301622	●
KA BG08-L 3P-0500-PNP	0301623	
KA BW08-L 3P-0300-PNP	0301594	
KA BW08-L 3P-0500-PNP	0301502	
Sensor distributor		
V2-M8	0301775	●
V4-M8	0301746	
V8-M8	0301751	

ⓘ Two sensors (closer/S) are required for each unit, plus extension cables as an option. Please note the minimum permitted bending radii for the sensor cables, which are generally 35 mm.

MMS PI1 programmable magnetic switches

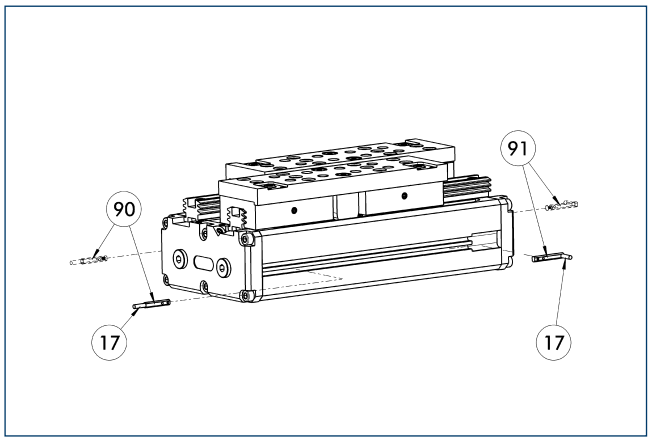

(17) Cable outlet
(91) MMS 22...-PI1-...-SA sensor
(90) MMS 22...-PI1-... sensor

Position query with one programmable position per sensor and electronics integrated in sensor. Programmable via MT magnet teaching tool (included in the scope of delivery) or ST plug teaching tool (optional). Limit position query mounted in C-groove. If the ST plug teaching tools are listed in the table, teaching can only take place with the ST plug teaching tools.

Description	ID	Often combined
MMS PI1 programmable magnetic switches		
MMS 22-PI1-S-M8-PNP	0301160	●
MMSK 22-PI1-S-PNP	0301162	
MMS PI1-HD programmable magnetic switches with stainless steel housing		
MMS 22-PI1-S-M8-PNP-HD	0301110	●
MMSK 22-PI1-S-PNP-HD	0301112	
MMS PI1 programmable magnetic switches with lateral cable outlet		
MMS 22-PI1-S-M8-PNP-SA	0301166	●
MMSK 22-PI1-S-PNP-SA	0301168	

ⓘ Two sensors (closer/S) are required for each unit, plus extension cables as an option. Please note the minimum permitted bending radii for the sensor cables, which are generally 35 mm. Connection cable, cable extensions, and sensor distributors can be found in the table for the MMS 22.

Analog position sensor

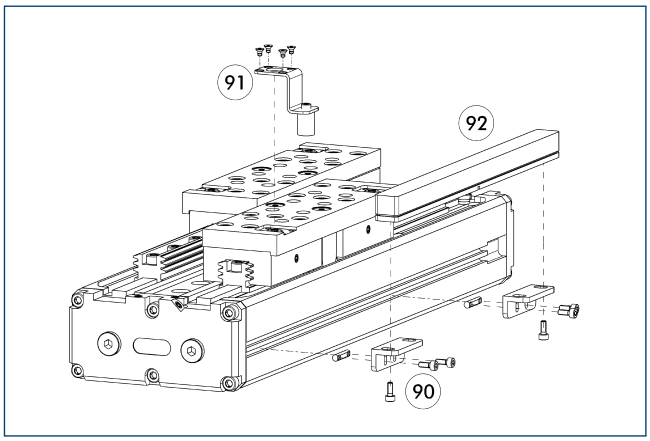

(90) Sensor bracket
(92) BIL sensor
(91) Switching cam

The drawing shows the mounting kit of the BIL stroke measuring system. The corresponding sensor must be ordered directly from the manufacturer.

Description	ID	
Mounting kit for APS		
AS-BIL-PHL 25	0308790	

ⓘ The suitability of the sensor for your specific case of application has to be determined by the manufacturer.

PHL 32

SCHUNK Grippers pneumatic | 2-Finger Parallel Grippers | Long-stroke Gripper

Gripping force

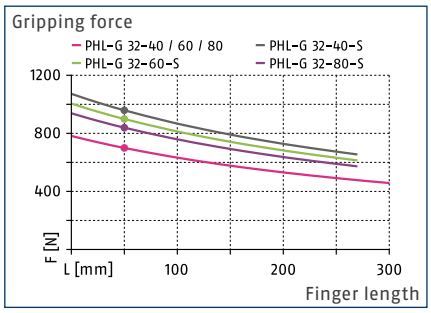

Finger load

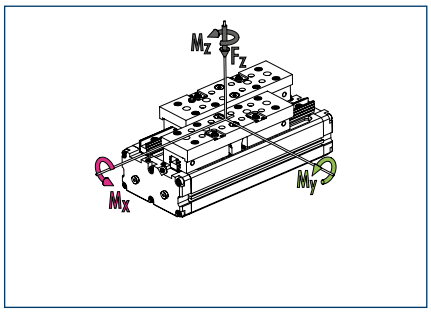

Technical data PHL-G

Description		PHL-G 32-040	PHL-G 32-040-S	PHL-G 32-060	PHL-G 32-060-S	PHL-G 32-080	PHL-G 32-080-S
ID		0308140	0308143	0308141	0308144	0308142	0308145
Stroke per jaw	[mm]	40	40	60	60	80	80
Closing- / opening force	[N]	700/700	960/-	700/700	900/-	700/700	840/-
min. spring force	[N]		260		200		140
Weight	[kg]	2.56	3.06	3.03	3.51	3.47	3.97
Recommended workpiece weight	[kg]	3.5	3.5	3.5	3.5	3.5	3.5
Fluid consumption per double stroke	[cm³]	161	309	227	375	292	440
min. / max. operating pressure	[bar]	2/8	4/6.5	2/8	4/6.5	2/8	4/6.5
Nominal operating pressure	[bar]	6	6	6	6	6	6
Closing- / opening time	[s]	0.23/0.23	0.23/0.45	0.31/0.31	0.31/0.6	0.39/0.39	0.39/0.75
max. permitted finger length	[mm]	300	270	300	270	300	270
max. permitted weight per finger	[kg]	2.5	2.5	2.5	2.5	2.5	2.5
IP class		41	41	41	41	41	41
min. / max. ambient temperature	[°C]	5/90	5/90	5/90	5/90	5/90	5/90
Repeat accuracy	[mm]	0.02	0.02	0.02	0.02	0.02	0.02
Moments M_x max./M_y max./M_z max.	[Nm]	44/190/54	44/190/54	53/190/57	53/190/57	61/190/60	61/190/60
Forces F_z max.	[N]	2200	2200	2200	2200	2200	2200

ⓘ The indicated moments and forces are static values, apply per base jaw and may occur simultaneously. M_y may arise in addition to the moment generated by the gripping force itself. If the max. permitted finger weight is exceeded, it is impreative to throttle the air supply so that the jaw movement occurs without any hitting or bouncing. Service life may be reduced.

Gripping force

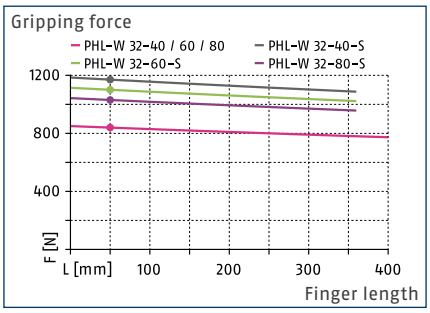

Finger load

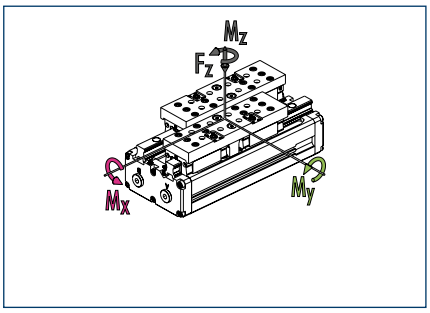

Technical data PHL-W

Description		PHL-W 32-040	PHL-W 32-040-S	PHL-W 32-060	PHL-W 32-060-S	PHL-W 32-080	PHL-W 32-080-S
ID		0308150	0308153	0308151	0308154	0308152	0308155
Stroke per jaw	[mm]	40	40	60	60	80	80
Closing- / opening force	[N]	840/840	1170/-	840/840	1100/-	840/840	1030/-
min. spring force	[N]		330		260		190
Weight	[kg]	3.37	3.87	3.84	4.33	4.29	4.79
Recommended workpiece weight	[kg]	4.2	4.2	4.2	4.2	4.2	4.2
Fluid consumption per double stroke	[cm³]	161	309	227	375	292	440
min. / max. operating pressure	[bar]	2/8	4/6.5	2/8	4/6.5	2/8	4/6.5
Nominal operating pressure	[bar]	6	6	6	6	6	6
Closing- / opening time	[s]	0.19/0.19	0.2/0.39	0.26/0.26	0.27/0.52	0.32/0.32	0.34/0.65
max. permitted finger length	[mm]	400	360	400	360	400	360
max. permitted weight per finger	[kg]	2.5	2.5	2.5	2.5	2.5	2.5
IP class		41	41	41	41	41	41
min. / max. ambient temperature	[°C]	5/90	5/90	5/90	5/90	5/90	5/90
Repeat accuracy	[mm]	0.02	0.02	0.02	0.02	0.02	0.02
Moments M_x max./M_y max./M_z max.	[Nm]	50/230/58	50/230/58	58/230/63	58/230/63	67/230/71	67/230/71
Forces F_z max.	[N]	2200	2200	2200	2200	2200	2200

ⓘ The indicated moments and forces are static values, apply per base jaw and may occur simultaneously. M_y may arise in addition to the moment generated by the gripping force itself. If the max. permitted finger weight is exceeded, it is impreative to throttle the air supply so that the jaw movement occurs without any hitting or bouncing. Service life may be reduced.

PHL 32-040 main view

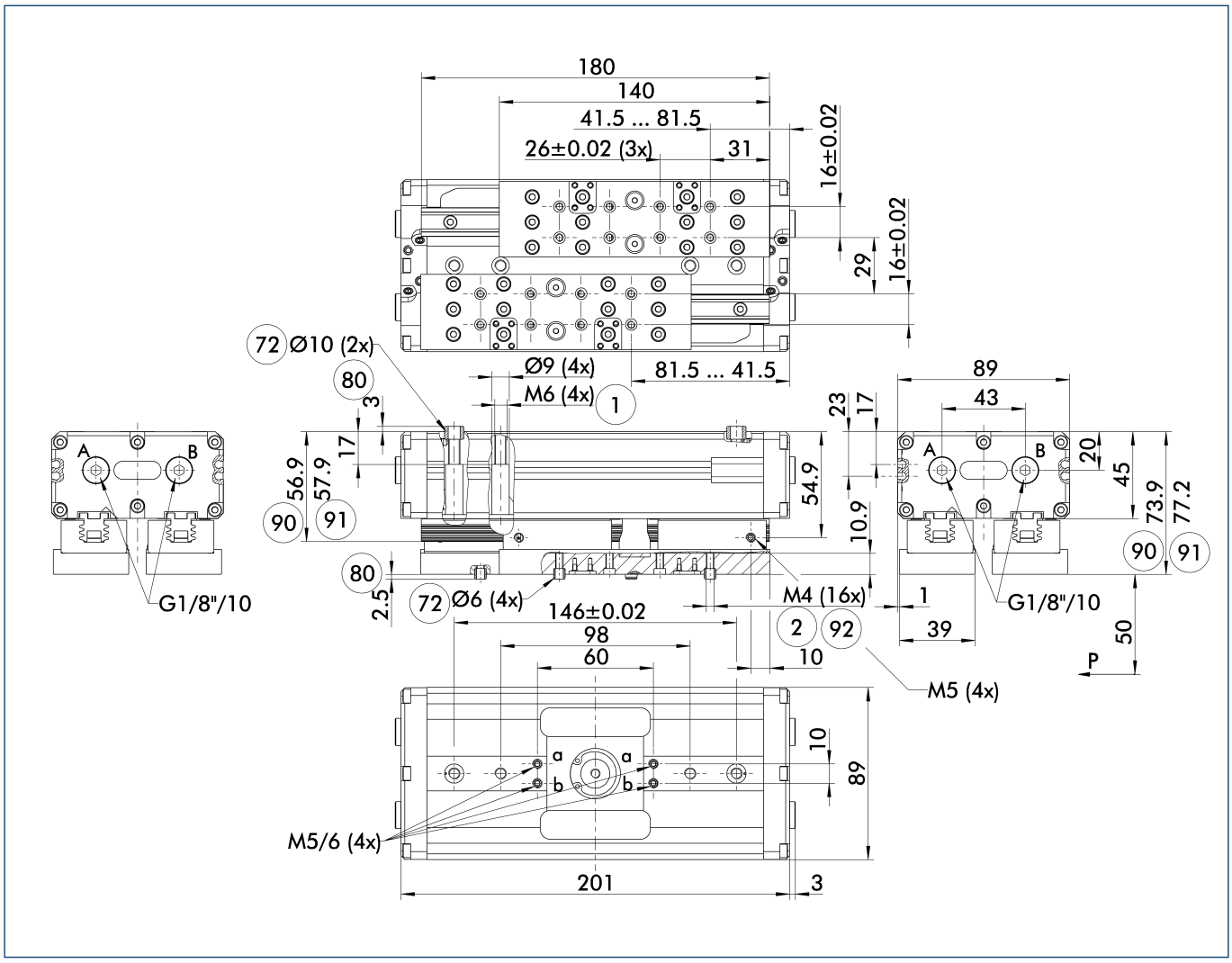

The drawing shows the gripper in the basic version with closed jaws, without dimensional consideration of the options described below.

ⓘ The SDV-P pressure maintenance valve can be used as a gripping force maintenance device (see catalog section on "Accessories").

A, a Main / direct connection, gripper opening

B, b Main / direct connection, gripper closing

(1) Gripper connection

(2) Finger connection

(72) Fit for centering sleeves

(80) Depth of the centering sleeve hole in the mating part

(90) Height of version G

(91) Height of version W

(92) Min. six screws per base jaw

Maximum permitted finger projection

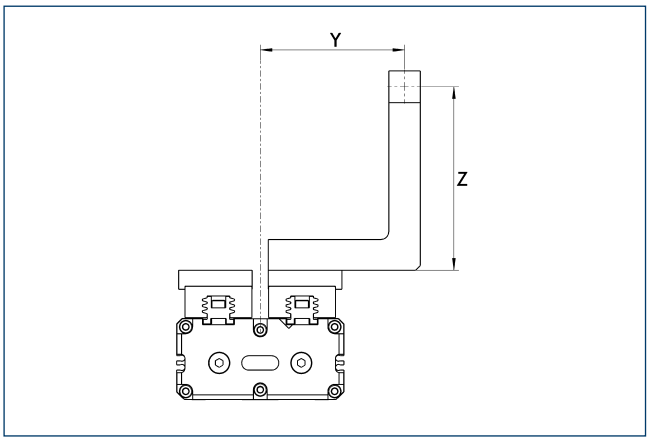

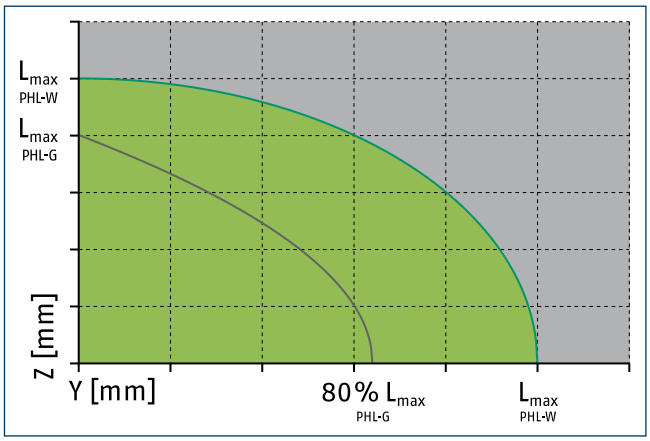

Permitted range Inadmissible range

L_{max} is equivalent to the maximum permitted finger length, see the chart of technical specifications.

Hose-free direct connection M5

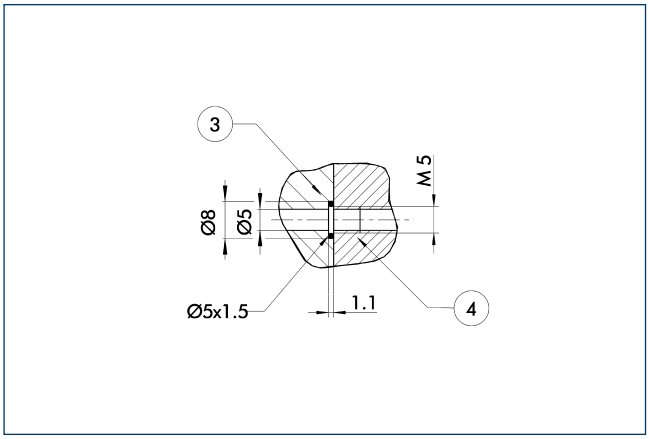

(3) Adapter (4) Gripper

The direct connection is used for supplying compressed air without hoses. Instead, the pressure medium is fed through bore-holes in the mounting plate.

Stroke version PHL 32-060

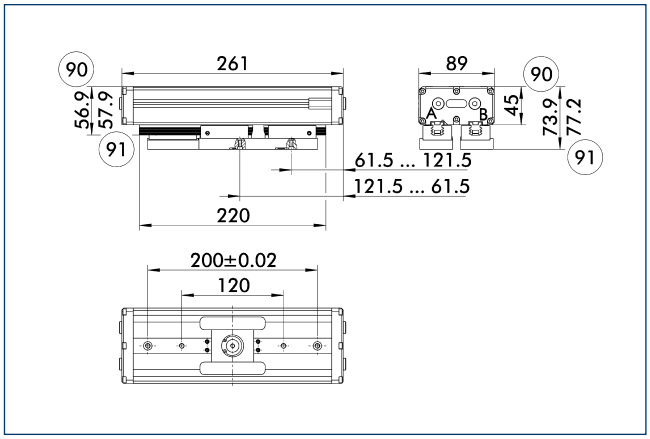

(90) Height of version G (91) Height of version W

The drawing shows changes in dimensions of the versions with a differing stroke compared to the main view of the shown version.

Stroke version PHL 32-080

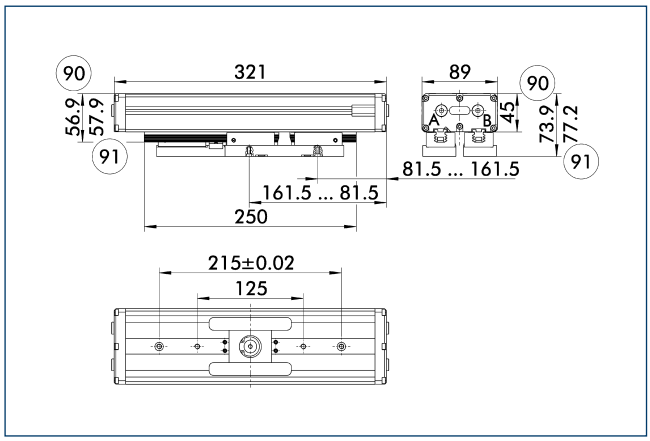

(90) Height of version G

(91) Height of version W

The drawing shows changes in dimensions of the versions with a differing stroke compared to the main view of the shown version.

Gripping force maintenance device S

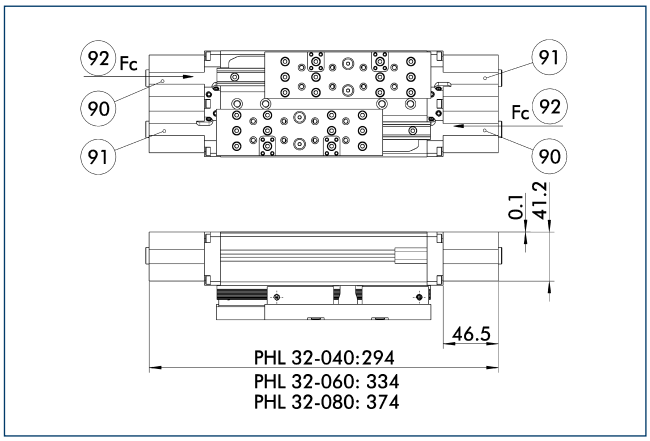

(90) Piston chamber with spring

(91) Piston chamber without spring

(92) Direction of force of the compression springs

The mechanical gripping force maintenance ensures a minimum clamping force even if there is a drop in pressure. This acts as the closing force in the S variant. The design of the top jaws means that they can also be used as an opening force. Besides this, the gripping force maintenance can be used to increase gripping force.

ⓘ The gripper is shown in the basic position, closed by springs.

Intermediate jaw interface

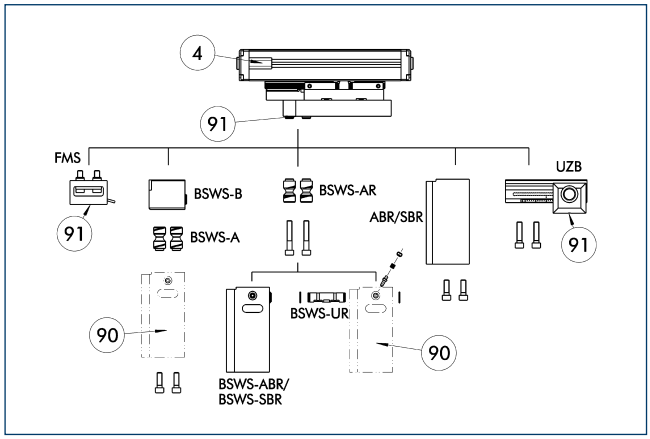

(4) Gripper

(90) Customized gripper fingers

(91) Uniform screw connection pattern

By using the intermediate jaw, you have the possibility of directly connecting a wide range of accessories directly. This includes force measuring jaws, jaw quick-change systems, finger blanks, and universal intermediate jaws.

SDV-P pressure maintenance valve

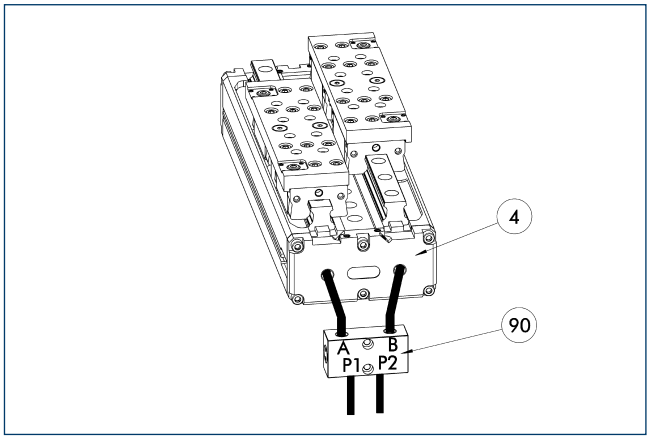

(4) Gripper

(90) SDV-P pressure maintenance valve

The SDV-P pressure maintenance valves ensure that the pressure in the piston chamber of pneumatic gripping, rotary, linear, and quick-change modules is maintained temporarily during an emergency stop.

Description	ID	
Pressure maintenance valve		
SDV-P 04	0403130	

Mounting kit for proximity switch

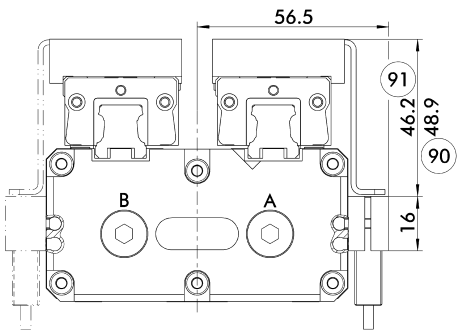

(90) Height of version G
(91) Height of version W

Limit position monitor can be mounted with mounting kit.

Description	ID	
Mounting kit for proximity switch		
AS-PHL-G032-IN80	0308831	
AS-PHL-W032-IN80	0308835	

ⓘ This mounting kit needs to be ordered optionally as an accessory.

ZBA PHL 32 intermediate jaws

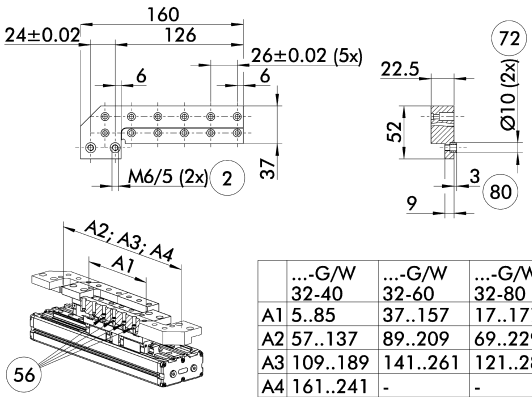

	...-G/W 32-40	...-G/W 32-60	...-G/W 32-80
A1	5..85	37..157	17..177
A2	57..137	89..209	69..229
A3	109..189	141..261	121..281
A4	161..241	-	-

(2) Finger connection
(56) Included in delivery
(72) Fit for centering sleeves
(80) Depth of the centerin sleeve hole in the mating part

Optionally intermediate jaws can be used, enabling direct connection and alignment of top jaws and varoius standard accessories in Z-direction.

Description	ID	Material	Scope of delivery
Intermedate jaws			
ZBA-PHL 32	0308149	Aluminum	2

Inductive proximity switches

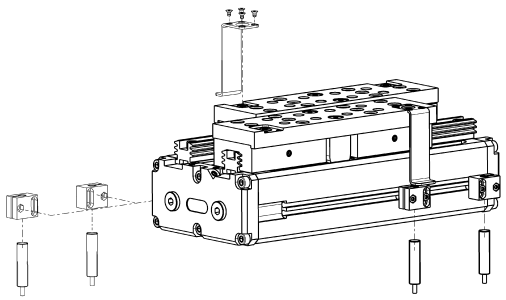

Limit position monitor can be mounted with mounting kit.

Description	ID	Often combined
Mounting kit for proximity switch		
AS-PHL032-IN80	0308831	
AS-PHL-W032-IN80	0308835	
Inductive proximity switches		
IN 80-S-M12	0301578	
IN 80-S-M8	0301478	●
INK 80-S	0301550	
Cable extensions		
KV BG12-SG12 3P-0030-PNP	0301999	
KV BG12-SG12 3P-0060-PNP	0301998	
KV BW08-SG08 3P-0030-PNP	0301495	
KV BW08-SG08 3P-0100-PNP	0301496	
KV BW08-SG08 3P-0200-PNP	0301497	●
KV BW12-SG12 3P-0030-PNP	0301595	
KV BW12-SG12 3P-0100-PNP	0301596	
KV BW12-SG12 3P-0200-PNP	0301597	
Clip for plug / socket		
CLI-M12	0301464	
CLI-M8	0301463	
Connection cables		
KA BG08-L 3P-0300-PNP	0301622	●
KA BG08-L 3P-0500-PNP	0301623	
KA BG12-L 3P-0500-PNP	30016369	
KA BW08-L 3P-0300-PNP	0301594	
KA BW08-L 3P-0500-PNP	0301502	
KA BW12-L 3P-0300-PNP	0301503	
KA BW12-L 3P-0500-PNP	0301507	
Sensor distributor		
V2-M8	0301775	●
V2-M12	0301776	●
V4-M12	0301747	
V4-M8	0301746	
V8-M12	0301752	
V8-M8	0301751	

ⓘ Two sensors (closer/S) are required for each unit, plus extension cables as an option. This mounting kit needs to be ordered optionally as an accessory. Please note the minimum permitted bending radii for the sensor cables, which are generally 35 mm.

MMS electronic magnetic switches

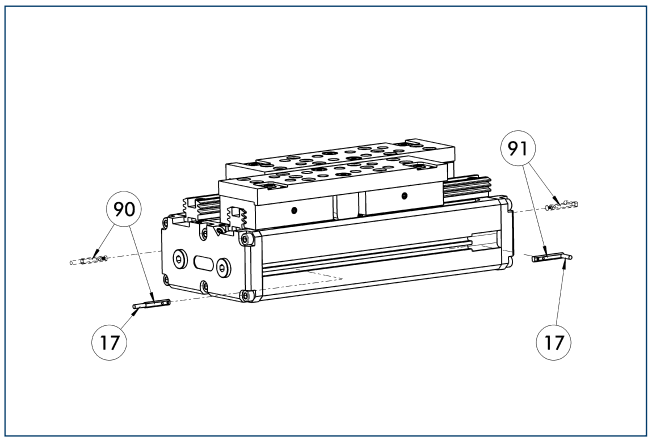

(17) Cable outlet
(91) MMS 22...-SA sensor
(90) MMS 22... sensor

End position monitoring for mounting in the C-slot.

Description	ID	Often combined
MMS electronic magnetic switches		
MMS 22-S-M8-PNP	0301032	●
MMSK 22-S-PNP	0301034	
MMS electronic magnetic switches with lateral cable outlet		
MMS 22-S-M8-PNP-SA	0301042	●
MMSK 22-S-PNP-SA	0301044	
Cable extensions		
KV BW08-SG08 3P-0030-PNP	0301495	
KV BW08-SG08 3P-0100-PNP	0301496	
KV BW08-SG08 3P-0200-PNP	0301497	●
Clip for plug / socket		
CLI-M8	0301463	
Connection cables		
KA BG08-L 3P-0300-PNP	0301622	●
KA BG08-L 3P-0500-PNP	0301623	
KA BW08-L 3P-0300-PNP	0301594	
KA BW08-L 3P-0500-PNP	0301502	
Sensor distributor		
V2-M8	0301775	●
V4-M8	0301746	
V8-M8	0301751	

ⓘ Two sensors (closer/S) are required for each unit, plus extension cables as an option. Please note the minimum permitted bending radii for the sensor cables, which are generally 35 mm.

MMS PI1 programmable magnetic switches

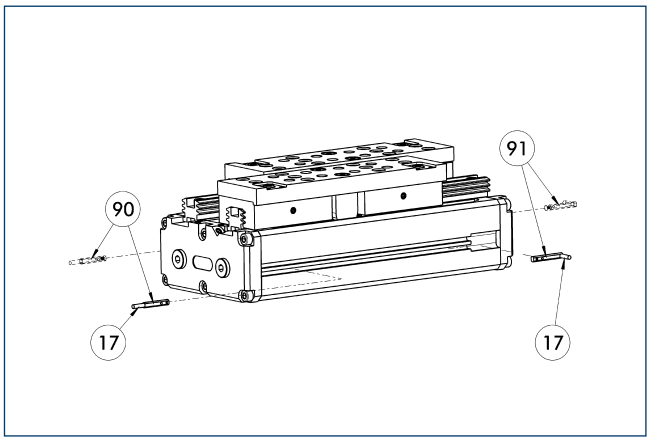

(17) Cable outlet
(91) MMS 22...-PI1-...-SA sensor
(90) MMS 22...-PI1-... sensor

Position query with one programmable position per sensor and electronics integrated in sensor. Programmable via MT magnet teaching tool (included in the scope of delivery) or ST plug teaching tool (optional). Limit position query mounted in C-groove. If the ST plug teaching tools are listed in the table, teaching can only take place with the ST plug teaching tools.

Description	ID	Often combined
MMS PI1 programmable magnetic switches		
MMS 22-PI1-S-M8-PNP	0301160	●
MMSK 22-PI1-S-PNP	0301162	
MMS PI1-HD programmable magnetic switches with stainless steel housing		
MMS 22-PI1-S-M8-PNP-HD	0301110	●
MMSK 22-PI1-S-PNP-HD	0301112	
MMS PI1 programmable magnetic switches with lateral cable outlet		
MMS 22-PI1-S-M8-PNP-SA	0301166	●
MMSK 22-PI1-S-PNP-SA	0301168	

ⓘ Two sensors (closer/S) are required for each unit, plus extension cables as an option. Please note the minimum permitted bending radii for the sensor cables, which are generally 35 mm. Connection cable, cable extensions, and sensor distributors can be found in the table for the MMS 22.

Analog position sensor

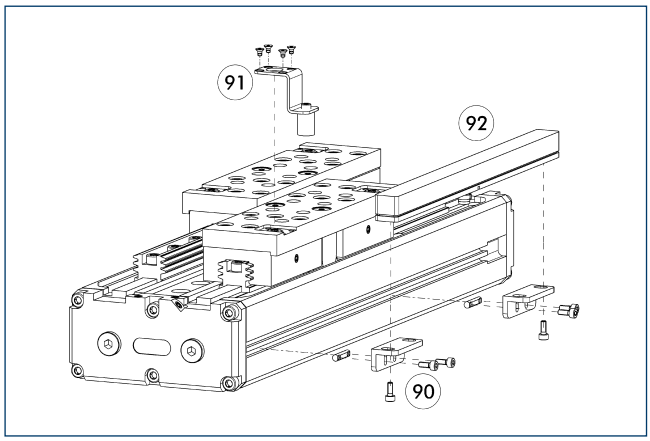

90 Sensor bracket
91 Switching cam
92 BIL sensor

The drawing shows the mounting kit of the BIL stroke measuring system. The corresponding sensor must be ordered directly from the manufacturer.

Description	ID	
Mounting kit for APS		
AS-BIL-PHL 32	0308791	

ⓘ The suitability of the sensor for your specific case of application has to be determined by the manufacturer.

PHL 40

SCHUNK Grippers pneumatic | 2-Finger Parallel Grippers | Long-stroke Gripper

Gripping force

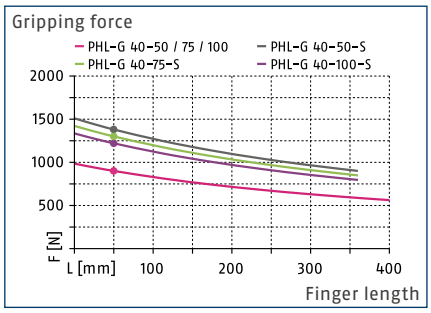

Finger load

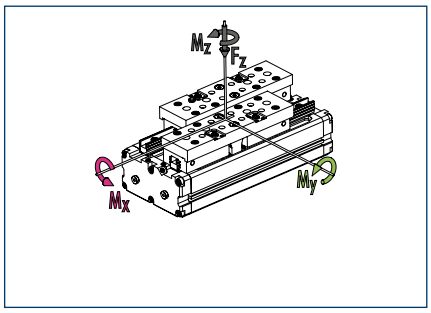

Technical data PHL-G

Description		PHL-G 40-050	PHL-G 40-050-S	PHL-G 40-075	PHL-G 40-075-S	PHL-G 40-100	PHL-G 40-100-S
ID		0308160	0308163	0308161	0308164	0308162	0308165
Stroke per jaw	[mm]	50	50	75	75	100	100
Closing- / opening force	[N]	900/900	1380/-	900/900	1300/-	900/900	1220/-
min. spring force	[N]		480		400		320
Weight	[kg]	4.65	5.5	5.45	7.01	6.25	7.39
Recommended workpiece weight	[kg]	4.5	4.5	4.5	4.5	4.5	4.5
Fluid consumption per double stroke	[cm³]	302	559	430	686	558	814
min. / max. operating pressure	[bar]	2/8	4/6.5	2/8	4/6.5	2/8	4/6.5
Nominal operating pressure	[bar]	6	6	6	6	6	6
Closing- / opening time	[s]	0.32/0.32	0.34/0.58	0.42/0.42	0.45/0.78	0.53/0.53	0.57/0.97
max. permitted finger length	[mm]	400	360	400	360	400	360
max. permitted weight per finger	[kg]	5	5	5	5	5	5
IP class		41	41	41	41	41	41
min. / max. ambient temperature	[°C]	5/90	5/90	5/90	5/90	5/90	5/90
Repeat accuracy	[mm]	0.02	0.02	0.02	0.02	0.02	0.02
Moments M_x max./M_y max./M_z max.	[Nm]	83/290/121	83/290/121	100/290/121	100/290/121	117/290/121	117/290/121
Forces F_z max.	[N]	3000	3000	3000	3000	3000	3000

ⓘ The indicated moments and forces are static values, apply per base jaw and may occur simultaneously. M_y may arise in addition to the moment generated by the gripping force itself. If the max. permitted finger weight is exceeded, it is impreative to throttle the air supply so that the jaw movement occurs without any hitting or bouncing. Service life may be reduced.

Gripping force

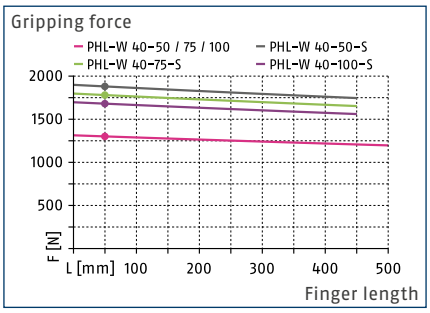

Finger load

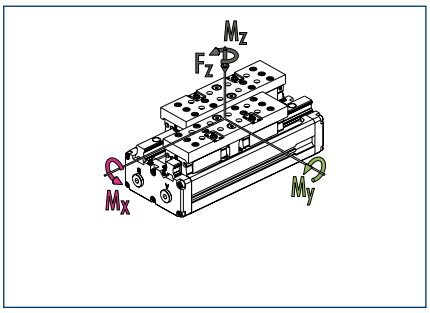

Technical data PHL-W

Description		PHL-W 40-050	PHL-W 40-050-S	PHL-W 40-075	PHL-W 40-075-S	PHL-W 40-100	PHL-W 40-100-S
ID		0308170	0308173	0308171	0308174	0308172	0308175
Stroke per jaw	[mm]	50	50	75	75	100	100
Closing- / opening force	[N]	1300/1300	1880/-	1300/1300	1780/-	1300/1300	1680/-
min. spring force	[N]		580		480		380
Weight	[kg]	5.64	6.35	6.44	7.96	7.24	8.29
Recommended workpiece weight	[kg]	6.5	6.5	6.5	6.5	6.5	6.5
Fluid consumption per double stroke	[cm³]	302	559	430	686	558	814
min. / max. operating pressure	[bar]	2/8	4/6.5	2/8	4/6.5	2/8	4/6.5
Nominal operating pressure	[bar]	6	6	6	6	6	6
Closing- / opening time	[s]	0.28/0.28	0.3/0.51	0.38/0.38	0.4/0.68	0.47/0.47	0.49/0.85
max. permitted finger length	[mm]	500	450	500	450	500	450
max. permitted weight per finger	[kg]	5	5	5	5	5	5
IP class		41	41	41	41	41	41
min. / max. ambient temperature	[°C]	5/90	5/90	5/90	5/90	5/90	5/90
Repeat accuracy	[mm]	0.02	0.02	0.02	0.02	0.02	0.02
Moments M_x max./M_y max./M_z max.	[Nm]	100/350/121	100/350/121	117/350/121	117/350/121	133/350/121	133/350/121
Forces F_z max.	[N]	3000	3000	3000	3000	3000	3000

ⓘ The indicated moments and forces are static values, apply per base jaw and may occur simultaneously. M_y may arise in addition to the moment generated by the gripping force itself. If the max. permitted finger weight is exceeded, it is impreative to throttle the air supply so that the jaw movement occurs without any hitting or bouncing. Service life may be reduced.

PHL 40-050 main view

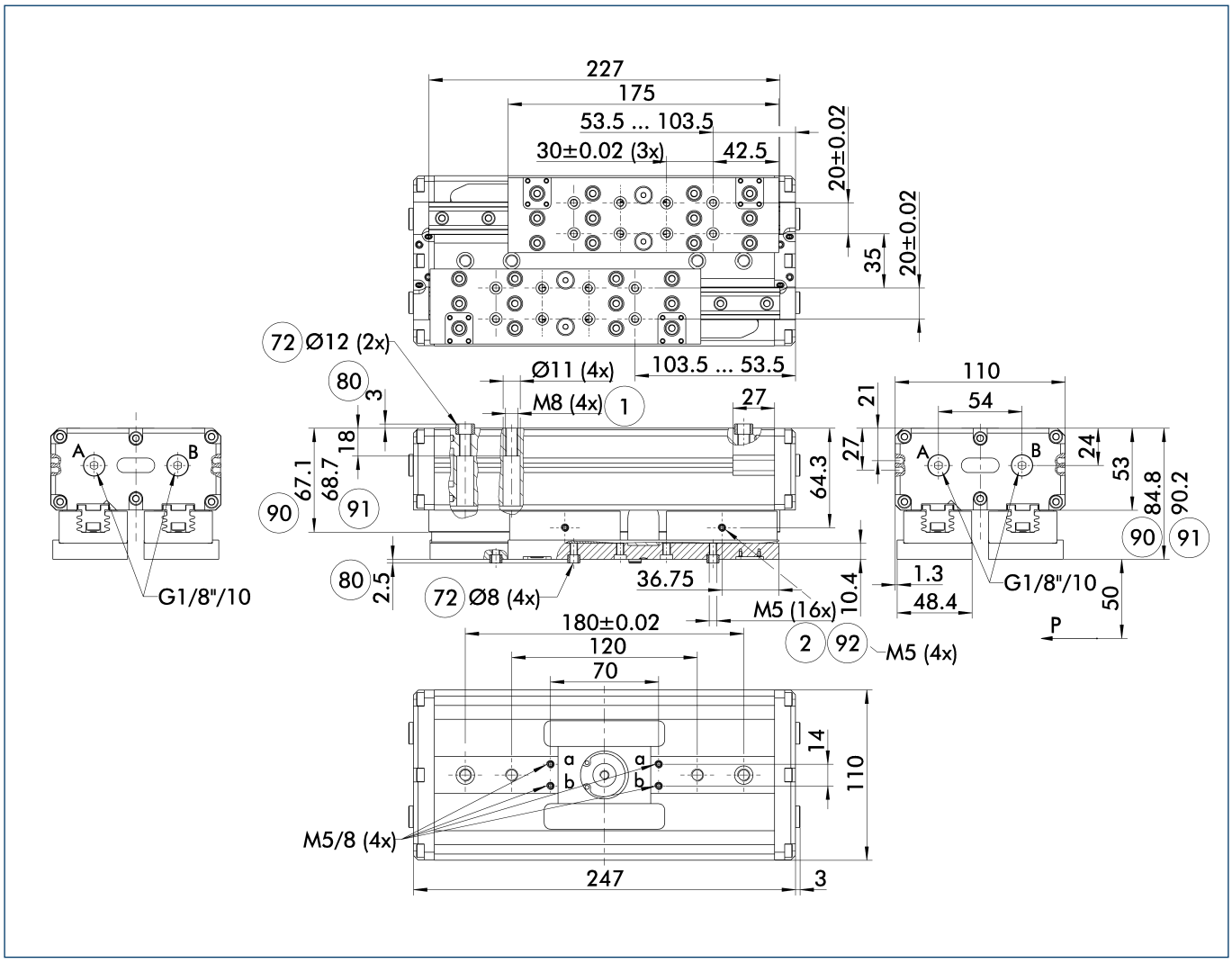

The drawing shows the gripper in the basic version with closed jaws, without dimensional consideration of the options described below.

ⓘ The SDV-P pressure maintenance valve can be used as a gripping force maintenance device (see catalog section on "Accessories").

A, a Main / direct connection, gripper opening

B, b Main / direct connection, gripper closing

(1) Gripper connection

(2) Finger connection

(72) Fit for centering sleeves

(80) Depth of the centering sleeve hole in the mating part

(90) Height of version G

(91) Height of version W

(92) Min. six screws per base jaw

Maximum permitted finger projection

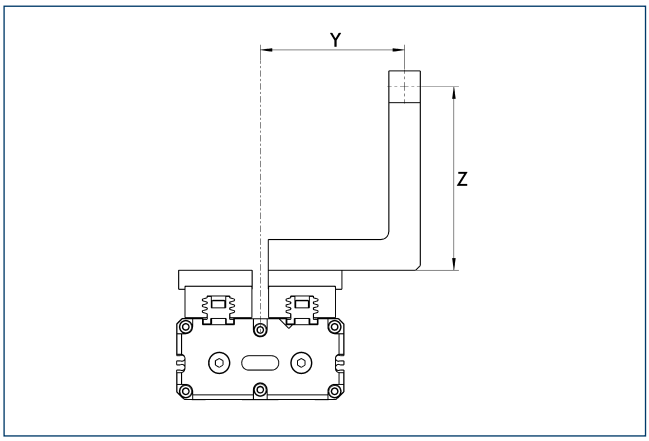

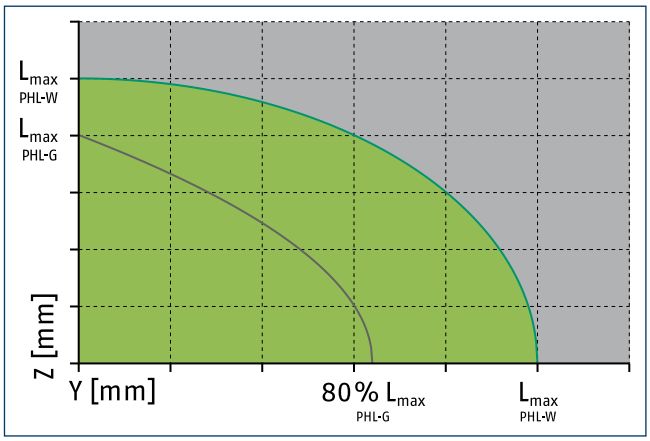

Permitted range Inadmissible range

L_{max} is equivalent to the maximum permitted finger length, see the chart of technical specifications.

Hose-free direct connection M5

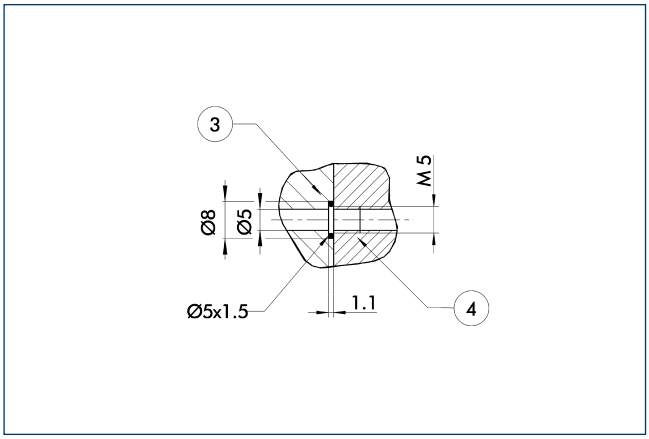

(3) Adapter (4) Gripper

The direct connection is used for supplying compressed air without hoses. Instead, the pressure medium is fed through bore-holes in the mounting plate.

Stroke version PHL 40-075

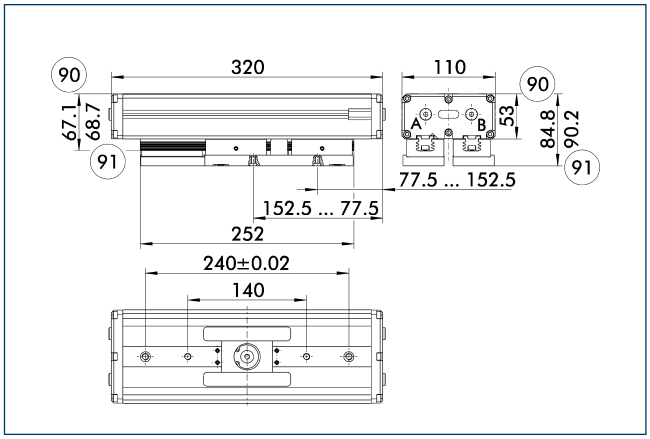

(90) Height of version G (91) Height of version W

The drawing shows changes in dimensions of the versions with a differing stroke compared to the main view of the shown version.

Stroke version PHL 40-100

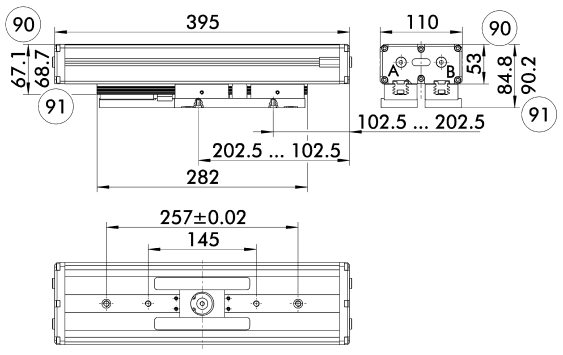

(90) Height of version G

(91) Height of version W

The drawing shows changes in dimensions of the versions with a differing stroke compared to the main view of the shown version.

Gripping force maintenance device S

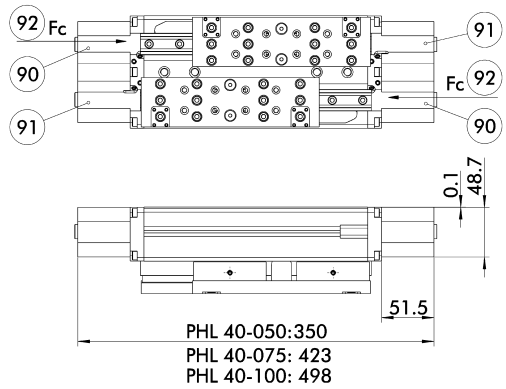

(90) Piston chamber with spring

(91) Piston chamber without spring

(92) Direction of force of the compression springs

The mechanical gripping force maintenance ensures a minimum clamping force even if there is a drop in pressure. This acts as the closing force in the S variant. The design of the top jaws means that they can also be used as an opening force. Besides this, the gripping force maintenance can be used to increase gripping force.

ⓘ The gripper is shown in the basic position, closed by springs.

Intermediate jaw interface

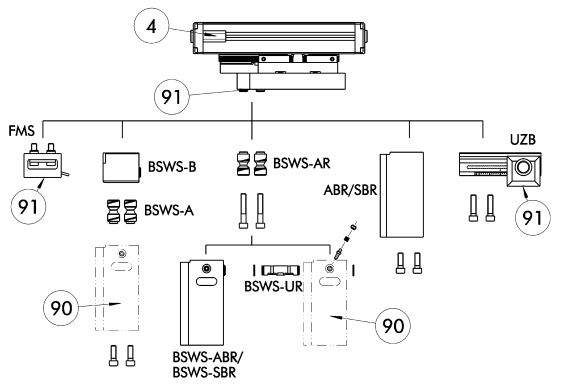

(4) Gripper

(90) Customized gripper fingers

(91) Uniform screw connection pattern

By using the intermediate jaw, you have the possibility of directly connecting a wide range of accessories directly. This includes force measuring jaws, jaw quick-change systems, finger blanks, and universal intermediate jaws.

SDV-P pressure maintenance valve

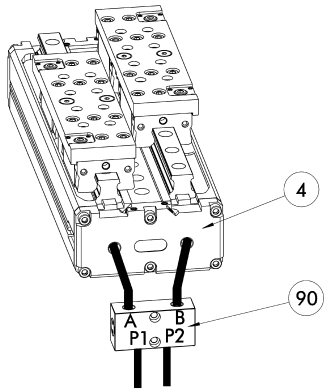

(4) Gripper

(90) SDV-P pressure maintenance valve

The SDV-P pressure maintenance valves ensure that the pressure in the piston chamber of pneumatic gripping, rotary, linear, and quick-change modules is maintained temporarily during an emergency stop.

Description	ID	
Pressure maintenance valve		
SDV-P 04	0403130	

ZBA PHL 40 intermediate jaws

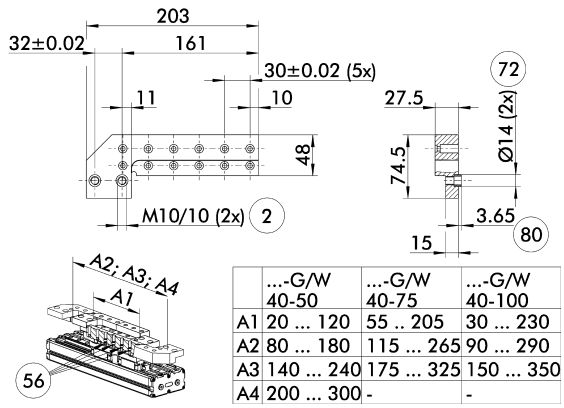

	...-G/W 40-50	...-G/W 40-75	...-G/W 40-100
A1	20 ... 120	55 .. 205	30 ... 230
A2	80 ... 180	115 ... 265	90 ... 290
A3	140 ... 240	175 ... 325	150 ... 350
A4	200 ... 300	-	-

(2) Finger connection
(56) Included in delivery
(72) Fit for centering sleeves
(80) Depth of the centering sleeve hole in the mating part

Optionally intermediate jaws can be used, enabling direct connection and alignment of top jaws and various standard accessories in Z-direction.

Description	ID	Material	Scope of delivery
Intermediate jaws			
ZBA-PHL 40	0308169	Aluminum	2

Mounting kit for proximity switch

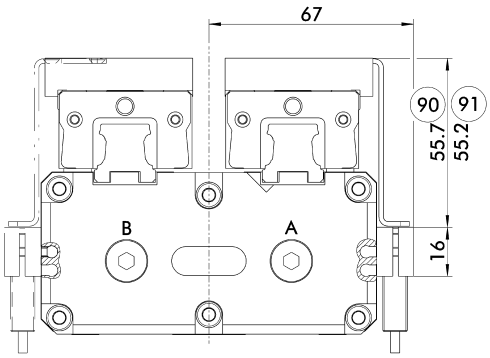

(90) Height of version G
(91) Height of version W

Limit position monitor can be mounted with mounting kit.

Description	ID	
Mounting kit for proximity switch		
AS-PHL040-IN80	0308832	

ⓘ This mounting kit needs to be ordered optionally as an accessory.

Inductive proximity switches

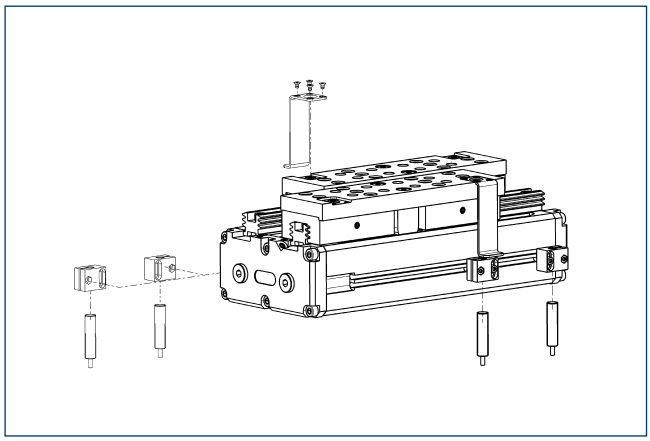

Limit position monitor can be mounted with mounting kit.

Description	ID	Often combined
Mounting kit for proximity switch		
AS-PHL040-IN80	0308832	
Inductive proximity switches		
IN 80-S-M12	0301578	
IN 80-S-M8	0301478	●
INK 80-S	0301550	
Cable extensions		
KV BG12-SG12 3P-0030-PNP	0301999	
KV BG12-SG12 3P-0060-PNP	0301998	
KV BW08-SG08 3P-0030-PNP	0301495	
KV BW08-SG08 3P-0100-PNP	0301496	
KV BW08-SG08 3P-0200-PNP	0301497	●
KV BW12-SG12 3P-0030-PNP	0301595	
KV BW12-SG12 3P-0100-PNP	0301596	
KV BW12-SG12 3P-0200-PNP	0301597	
Clip for plug / socket		
CLI-M12	0301464	
CLI-M8	0301463	
Connection cables		
KA BG08-L 3P-0300-PNP	0301622	●
KA BG08-L 3P-0500-PNP	0301623	
KA BG12-L 3P-0500-PNP	30016369	
KA BW08-L 3P-0300-PNP	0301594	
KA BW08-L 3P-0500-PNP	0301502	
KA BW12-L 3P-0300-PNP	0301503	
KA BW12-L 3P-0500-PNP	0301507	
Sensor distributor		
V2-M8	0301775	●
V2-M12	0301776	●
V4-M12	0301747	
V4-M8	0301746	
V8-M12	0301752	
V8-M8	0301751	

ⓘ Two sensors (closer/S) are required for each unit, plus extension cables as an option. This mounting kit needs to be ordered optionally as an accessory. Please note the minimum permitted bending radii for the sensor cables, which are generally 35 mm.

MMS electronic magnetic switches

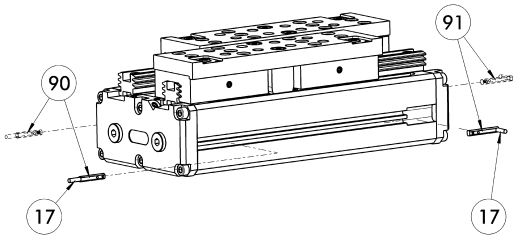

(17) Cable outlet
(91) MMS 22...-SA sensor
(90) MMS 22... sensor

End position monitoring for mounting in the C-slot.

Description	ID	Often combined
MMS electronic magnetic switches		
MMS 22-S-M8-PNP	0301032	●
MMSK 22-S-PNP	0301034	
MMS electronic magnetic switches with lateral cable outlet		
MMS 22-S-M8-PNP-SA	0301042	●
MMSK 22-S-PNP-SA	0301044	
Reed switches		
RMS 22-S-M8	0377720	●
Cable extensions		
KV BW08-SG08 3P-0030-PNP	0301495	
KV BW08-SG08 3P-0100-PNP	0301496	
KV BW08-SG08 3P-0200-PNP	0301497	●
Clip for plug / socket		
CLI-M8	0301463	
Connection cables		
KA BG08-L 3P-0300-PNP	0301622	●
KA BG08-L 3P-0500-PNP	0301623	
KA BW08-L 3P-0300-PNP	0301594	
KA BW08-L 3P-0500-PNP	0301502	
RSS radio sensor system		
RSS-T2	0377710	
Sensor distributor		
V2-M8	0301775	●
V4-M8	0301746	
V8-M8	0301751	

ⓘ Two sensors (closer/S) are required for each unit, plus extension cables as an option. Please note the minimum permitted bending radii for the sensor cables, which are generally 35 mm.

MMS PI1 programmable magnetic switches

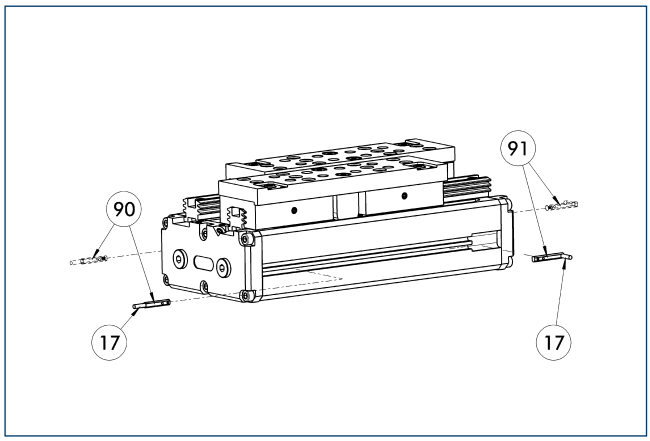

(17) Cable outlet
(91) MMS 22...-PI1-...-SA sensor
(90) MMS 22...-PI1-... sensor

Position query with one programmable position per sensor and electronics integrated in sensor. Programmable via MT magnet teaching tool (included in the scope of delivery) or ST plug teaching tool (optional). Limit position query mounted in C-groove. If the ST plug teaching tools are listed in the table, teaching can only take place with the ST plug teaching tools.

Description	ID	Often combined
MMS PI1 programmable magnetic switches		
MMS 22-PI1-S-M8-PNP	0301160	●
MMSK 22-PI1-S-PNP	0301162	
MMS PI1-HD programmable magnetic switches with stainless steel housing		
MMS 22-PI1-S-M8-PNP-HD	0301110	●
MMSK 22-PI1-S-PNP-HD	0301112	
MMS PI1 programmable magnetic switches with lateral cable outlet		
MMS 22-PI1-S-M8-PNP-SA	0301166	●
MMSK 22-PI1-S-PNP-SA	0301168	

ⓘ Two sensors (closer/S) are required for each unit, plus extension cables as an option. Please note the minimum permitted bending radii for the sensor cables, which are generally 35 mm. Connection cable, cable extensions, and sensor distributors can be found in the table for the MMS 22.

Analog position sensor

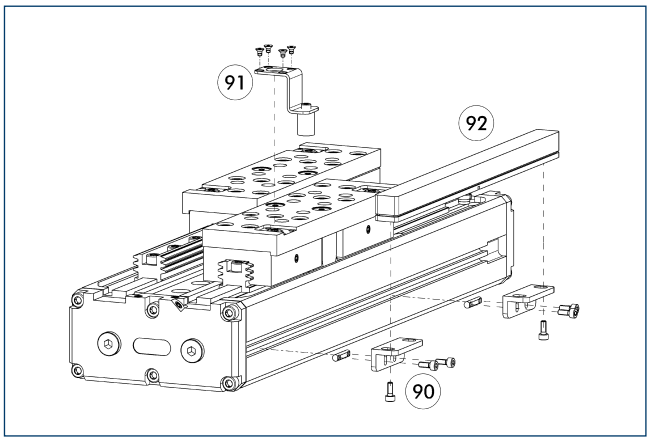

(90) Sensor bracket
(92) BIL sensor
(91) Switching cam

The drawing shows the mounting kit of the BIL stroke measuring system. The corresponding sensor must be ordered directly from the manufacturer.

Description	ID	
Mounting kit for APS		
AS-BIL-PHL 40	0308792	

ⓘ The suitability of the sensor for your specific case of application has to be determined by the manufacturer.

PHL 50

SCHUNK Grippers pneumatic | 2-Finger Parallel Grippers | Long-stroke Gripper

Gripping force

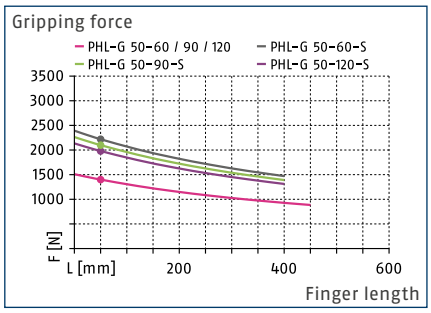

Finger load

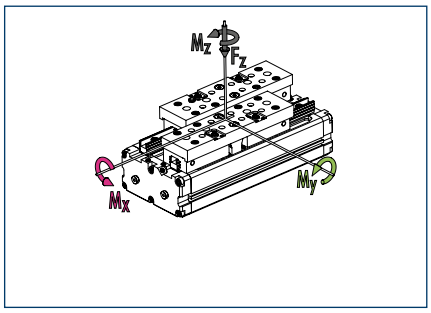

Technical data PHL-G

Description		PHL-G 50-060	PHL-G 50-060-S	PHL-G 50-090	PHL-G 50-090-S	PHL-G 50-120	PHL-G 50-120-S
ID		0308180	0308183	0308181	0308184	0308182	0308185
Stroke per jaw	[mm]	60	60	90	90	120	120
Closing- / opening force	[N]	1400/1400	2220/-	1400/1400	2100/-	1400/1400	1980/-
min. spring force	[N]		820		700		580
Weight	[kg]	7.79	9.48	9.25	10.92	10.65	12.35
Recommended workpiece weight	[kg]	7	7	7	7	7	7
Fluid consumption per double stroke	[cm³]	575	1070	814	1309	1053	1548
min. / max. operating pressure	[bar]	2/8	4/6.5	2/8	4/6.5	2/8	4/6.5
Nominal operating pressure	[bar]	6	6	6	6	6	6
Closing- / opening time	[s]	0.68/0.68	0.72/1.17	0.91/0.91	0.96/1.55	1.14/1.14	1.2/1.94
max. permitted finger length	[mm]	450	400	450	400	450	400
max. permitted weight per finger	[kg]	8	8	8	8	8	8
IP class		41	41	41	41	41	41
min. / max. ambient temperature	[°C]	5/90	5/90	5/90	5/90	5/90	5/90
Repeat accuracy	[mm]	0.02	0.02	0.02	0.02	0.02	0.02
Moments M_x max./M_y max./M_z max.	[Nm]	142/390/219	142/390/219	161/390/219	161/390/219	181/390/219	181/390/219
Forces F_z max.	[N]	5300	5300	5300	5300	5300	5300

ⓘ The indicated moments and forces are static values, apply per base jaw and may occur simultaneously. M_y may arise in addition to the moment generated by the gripping force itself. If the max. permitted finger weight is exceeded, it is impreative to throttle the air supply so that the jaw movement occurs without any hitting or bouncing. Service life may be reduced.

Gripping force

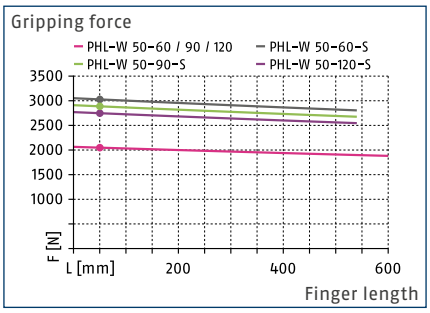

Finger load

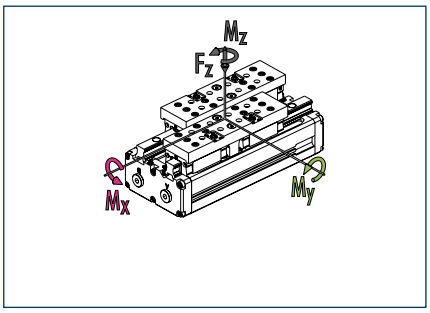

Technical data PHL-W

Description		PHL-W 50-060	PHL-W 50-060-S	PHL-W 50-090	PHL-W 50-090-S	PHL-W 50-120	PHL-W 50-120-S
ID		0308190	0308193	0308191	0308194	0308192	0308195
Stroke per jaw	[mm]	60	60	90	90	120	120
Closing- / opening force	[N]	2050/2050	3030/-	2050/2050	2890/-	2050/2050	2750/-
min. spring force	[N]		980		840		700
Weight	[kg]	9.2	10.9	10.71	11.6	12.14	13.84
Recommended workpiece weight	[kg]	10.25	10.25	10.25	10.25	10.25	10.25
Fluid consumption per double stroke	[cm³]	575	1070	814	1309	1053	1548
min. / max. operating pressure	[bar]	2/8	4/6.5	2/8	4/6.5	2/8	4/6.5
Nominal operating pressure	[bar]	6	6	6	6	6	6
Closing- / opening time	[s]	0.61/0.61	0.62/1.01	0.81/0.81	0.83/1.35	1.02/1.02	1.04/1.69
max. permitted finger length	[mm]	600	540	600	540	600	540
max. permitted weight per finger	[kg]	8	8	8	8	8	8
IP class		41	41	41	41	41	41
min. / max. ambient temperature	[°C]	5/90	5/90	5/90	5/90	5/90	5/90
Repeat accuracy	[mm]	0.02	0.02	0.02	0.02	0.02	0.02
Moments M_x max./M_y max./M_z max.	[Nm]	150/590/219	150/590/219	169/590/219	169/590/219	188/590/219	188/590/219
Forces F_z max.	[N]	5300	5300	5300	5300	5300	5300

ⓘ The indicated moments and forces are static values, apply per base jaw and may occur simultaneously. M_y may arise in addition to the moment generated by the gripping force itself. If the max. permitted finger weight is exceeded, it is impreative to throttle the air supply so that the jaw movement occurs without any hitting or bouncing. Service life may be reduced.

PHL 50-060 main view

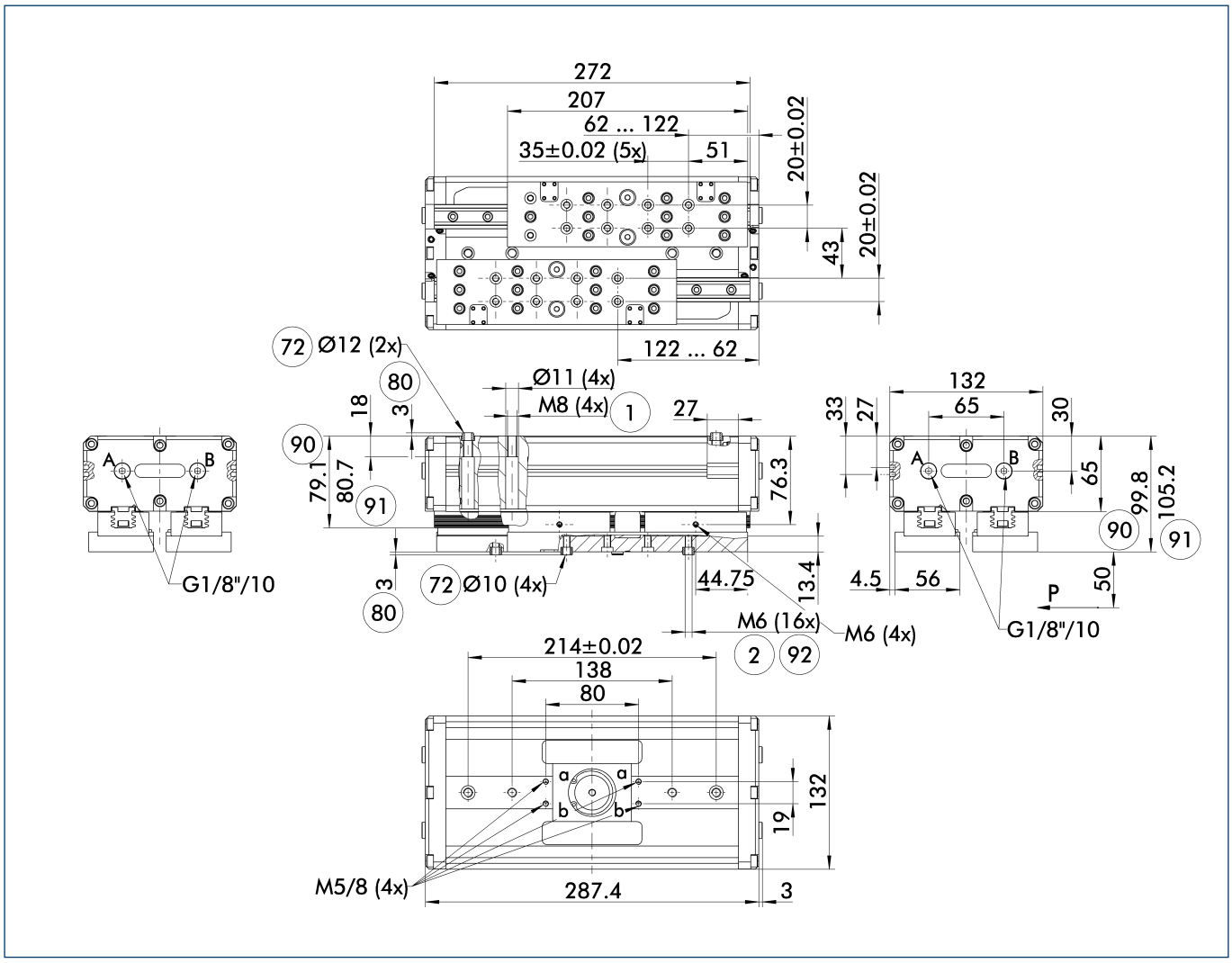

The drawing shows the gripper in the basic version with closed jaws, without dimensional consideration of the options described below.

ⓘ The SDV-P pressure maintenance valve can be used as a gripping force maintenance device (see catalog section on "Accessories").

A, a Main / direct connection, gripper opening

B, b Main / direct connection, gripper closing

(1) Gripper connection

(2) Finger connection

(72) Fit for centering sleeves

(80) Depth of the centering sleeve hole in the mating part

(90) Height of version G

(91) Height of version W

(92) Min. six screws per base jaw

Maximum permitted finger projection

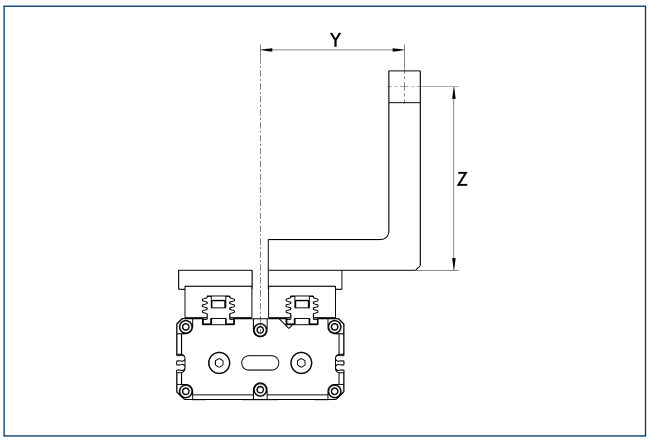

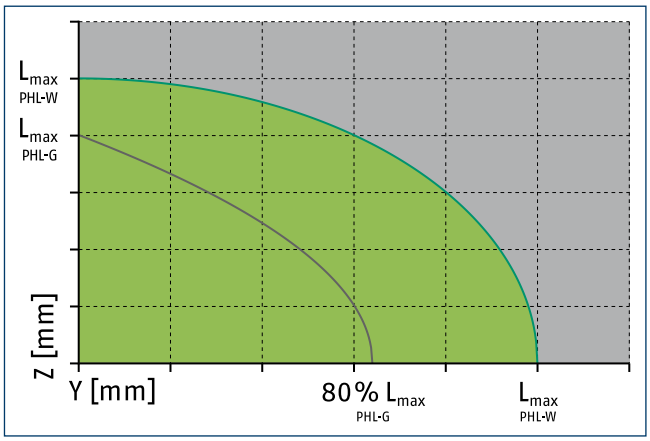

Permitted range Inadmissible range

L_{max} is equivalent to the maximum permitted finger length, see the chart of technical specifications.

Hose-free direct connection M5

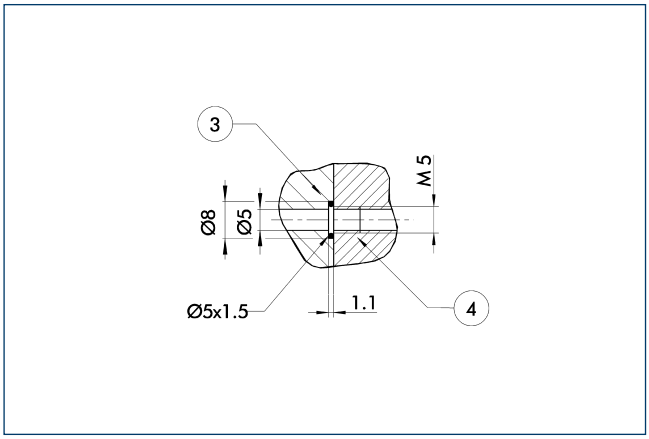

3 Adapter 4 Gripper

The direct connection is used for supplying compressed air without hoses. Instead, the pressure medium is fed through bore-holes in the mounting plate.

Stroke version PHL 50-090

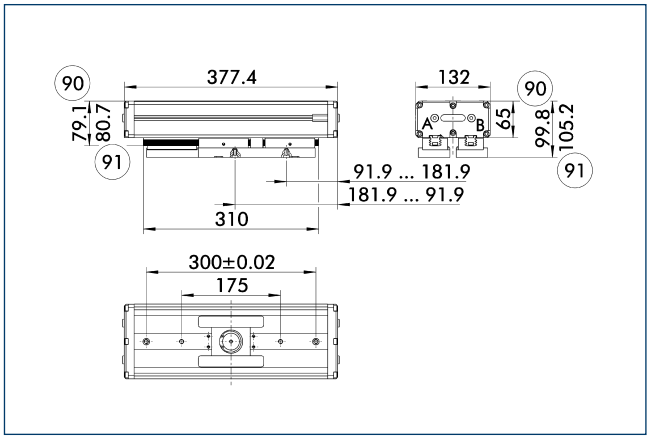

90 Height of version G 91 Height of version W

The drawing shows changes in dimensions of the versions with a differing stroke compared to the main view of the shown version.

Stroke version PHL 50-120

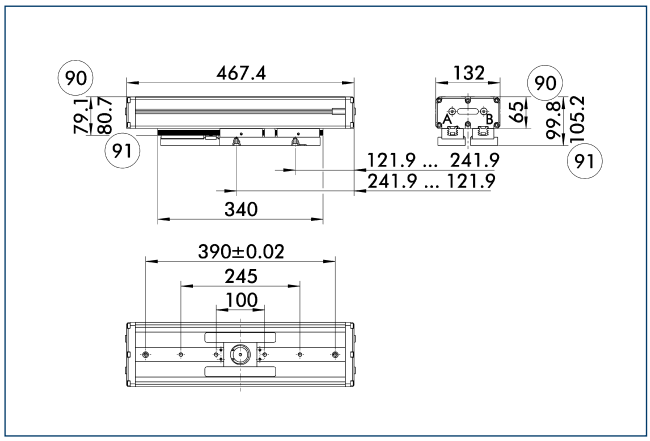

(90) Height of version G

(91) Height of version W

The drawing shows changes in dimensions of the versions with a differing stroke compared to the main view of the shown version.

Gripping force maintenance device S

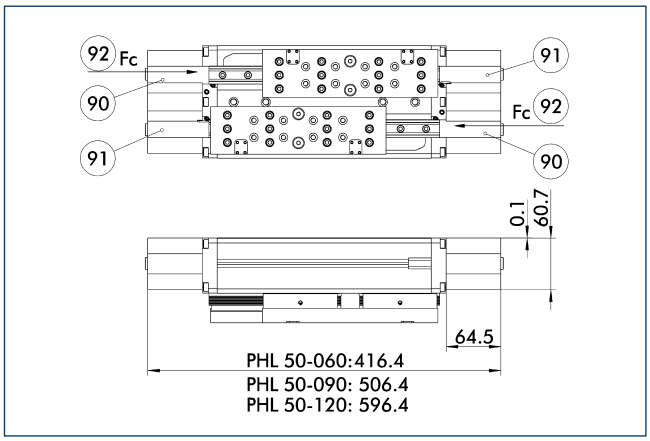

(90) Piston chamber with spring

(91) Piston chamber without spring

(92) Direction of force of the compression springs

The mechanical gripping force maintenance ensures a minimum clamping force even if there is a drop in pressure. This acts as the closing force in the S variant. The design of the top jaws means that they can also be used as an opening force. Besides this, the gripping force maintenance can be used to increase gripping force.

ⓘ The gripper is shown in the basic position, closed by springs.

Intermediate jaw interface

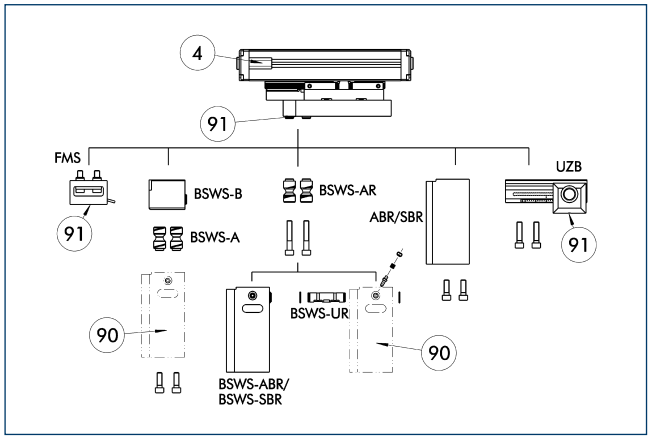

(4) Gripper

(90) Customized gripper fingers

(91) Uniform screw connection pattern

By using the intermediate jaw, you have the possibility of directly connecting a wide range of accessories directly. This includes force measuring jaws, jaw quick-change systems, finger blanks, and universal intermediate jaws.

SDV-P pressure maintenance valve

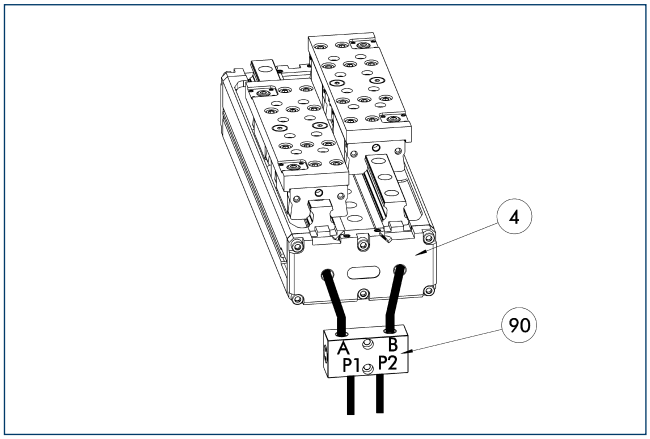

(4) Gripper

(90) SDV-P pressure maintenance valve

The SDV-P pressure maintenance valves ensure that the pressure in the piston chamber of pneumatic gripping, rotary, linear, and quick-change modules is maintained temporarily during an emergency stop.

Description	ID	
Pressure maintenance valve		
SDV-P 04	0403130	

Mounting kit for proximity switch

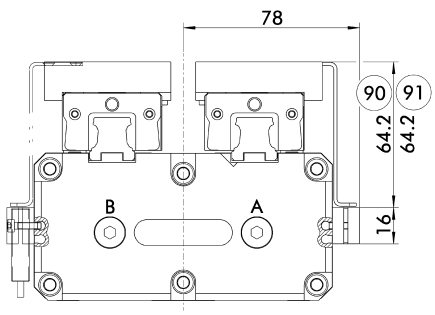

(90) Height of version G (91) Height of version W

Limit position monitor can be mounted with mounting kit.

Description	ID	
Mounting kit for proximity switch		
AS-PHL050-IN80	0308833	

ⓘ This mounting kit needs to be ordered optionally as an accessory.

ZBA PHL 50 intermediate jaws

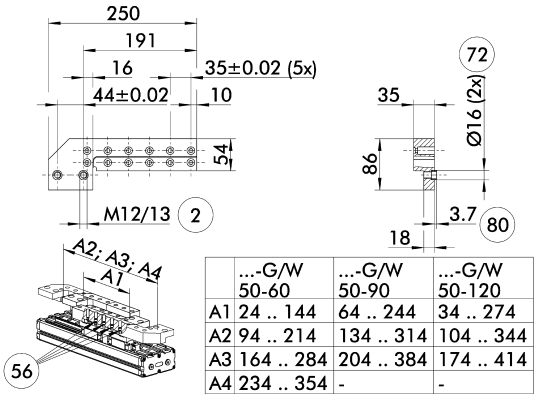

	...-G/W 50-60	...-G/W 50-90	...-G/W 50-120
A1	24 .. 144	64 .. 244	34 .. 274
A2	94 .. 214	134 .. 314	104 .. 344
A3	164 .. 284	204 .. 384	174 .. 414
A4	234 .. 354	-	-

(2) Finger connection
(56) Included in delivery
(72) Fit for centering sleeves
(80) Depth of the centering sleeve hole in the mating part

Optionally intermediate jaws can be used, enabling direct connection and alignment of top jaws and various standard accessories in Z-direction.

Description	ID	Material	Scope of delivery
Intermediate jaws			
ZBA-PHL 50	0308189	Aluminum	2

Inductive proximity switches

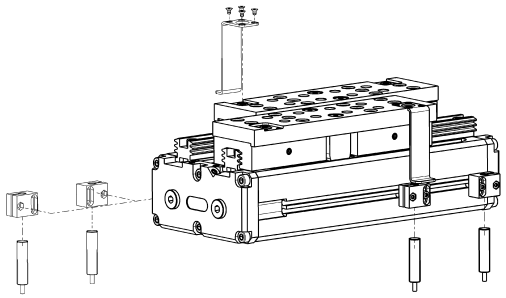

Limit position monitor can be mounted with mounting kit.

Description	ID	Often combined
Mounting kit for proximity switch		
AS-PHL050-IN80	0308833	
Inductive proximity switches		
IN 80-S-M12	0301578	
IN 80-S-M8	0301478	●
INK 80-S	0301550	
Cable extensions		
KV BG12-SG12 3P-0030-PNP	0301999	
KV BG12-SG12 3P-0060-PNP	0301998	
KV BW08-SG08 3P-0030-PNP	0301495	
KV BW08-SG08 3P-0100-PNP	0301496	
KV BW08-SG08 3P-0200-PNP	0301497	●
KV BW12-SG12 3P-0030-PNP	0301595	
KV BW12-SG12 3P-0100-PNP	0301596	
KV BW12-SG12 3P-0200-PNP	0301597	
Clip for plug / socket		
CLI-M12	0301464	
CLI-M8	0301463	
Connection cables		
KA BG08-L 3P-0300-PNP	0301622	●
KA BG08-L 3P-0500-PNP	0301623	
KA BG12-L 3P-0500-PNP	30016369	
KA BW08-L 3P-0300-PNP	0301594	
KA BW08-L 3P-0500-PNP	0301502	
KA BW12-L 3P-0300-PNP	0301503	
KA BW12-L 3P-0500-PNP	0301507	
Sensor distributor		
V2-M8	0301775	●
V2-M12	0301776	●
V4-M12	0301747	
V4-M8	0301746	
V8-M12	0301752	
V8-M8	0301751	

ⓘ Two sensors (closer/S) are required for each unit, plus extension cables as an option. This mounting kit needs to be ordered optionally as an accessory. Please note the minimum permitted bending radii for the sensor cables, which are generally 35 mm.

MMS electronic magnetic switches

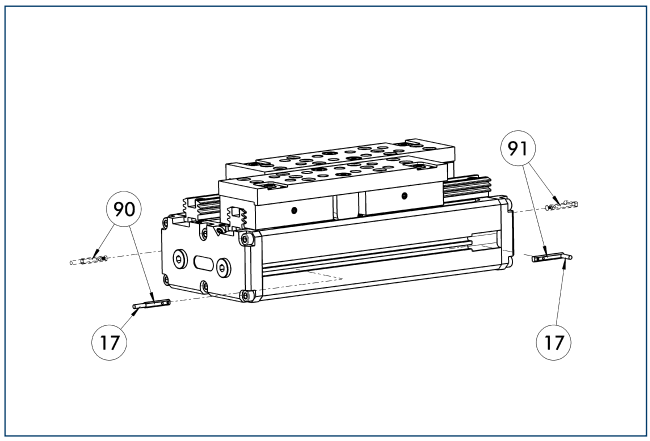

(17) Cable outlet
(91) MMS 22...-SA sensor
(90) MMS 22... sensor

End position monitoring for mounting in the C-slot.

Description	ID	Often combined
MMS electronic magnetic switches		
MMS 22-S-M8-PNP	0301032	●
MMSK 22-S-PNP	0301034	
MMS electronic magnetic switches with lateral cable outlet		
MMS 22-S-M8-PNP-SA	0301042	●
MMSK 22-S-PNP-SA	0301044	
Cable extensions		
KV BW08-SG08 3P-0030-PNP	0301495	
KV BW08-SG08 3P-0100-PNP	0301496	
KV BW08-SG08 3P-0200-PNP	0301497	●
Clip for plug / socket		
CLI-M8	0301463	
Connection cables		
KA BG08-L 3P-0300-PNP	0301622	●
KA BG08-L 3P-0500-PNP	0301623	
KA BW08-L 3P-0300-PNP	0301594	
KA BW08-L 3P-0500-PNP	0301502	
Sensor distributor		
V2-M8	0301775	●
V4-M8	0301746	
V8-M8	0301751	

ⓘ Two sensors (closer/S) are required for each unit, plus extension cables as an option. Please note the minimum permitted bending radii for the sensor cables, which are generally 35 mm.

MMS PI1 programmable magnetic switches

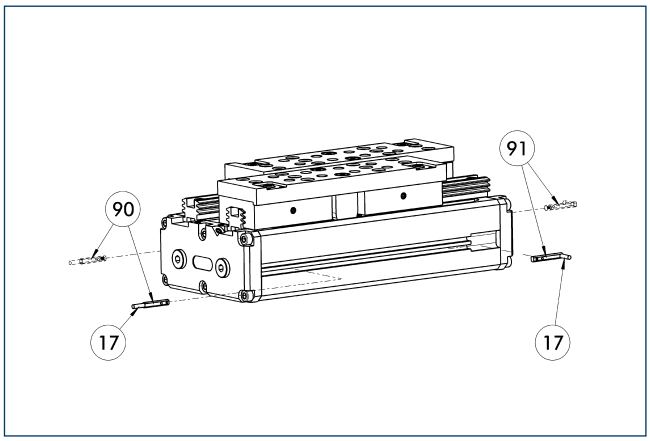

(17) Cable outlet
(91) MMS 22...-PI1-...-SA sensor
(90) MMS 22...-PI1-... sensor

Position query with one programmable position per sensor and electronics integrated in sensor. Programmable via MT magnet teaching tool (included in the scope of delivery) or ST plug teaching tool (optional). Limit position query mounted in C-groove. If the ST plug teaching tools are listed in the table, teaching can only take place with the ST plug teaching tools.

Description	ID	Often combined
MMS PI1 programmable magnetic switches		
MMS 22-PI1-S-M8-PNP	0301160	●
MMSK 22-PI1-S-PNP	0301162	
MMS PI1-HD programmable magnetic switches with stainless steel housing		
MMS 22-PI1-S-M8-PNP-HD	0301110	●
MMSK 22-PI1-S-PNP-HD	0301112	
MMS PI1 programmable magnetic switches with lateral cable outlet		
MMS 22-PI1-S-M8-PNP-SA	0301166	●
MMSK 22-PI1-S-PNP-SA	0301168	

ⓘ Two sensors (closer/S) are required for each unit, plus extension cables as an option. Please note the minimum permitted bending radii for the sensor cables, which are generally 35 mm. Connection cable, cable extensions, and sensor distributors can be found in the table for the MMS 22.

Analog position sensor

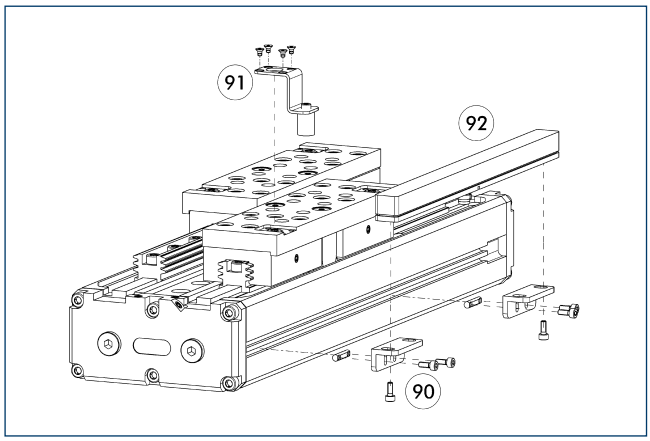

90 Sensor bracket
91 Switching cam
92 BIL sensor

The drawing shows the mounting kit of the BIL stroke measuring system. The corresponding sensor must be ordered directly from the manufacturer.

Description	ID	
Mounting kit for APS		
AS-BIL-PHL 50	0308793	

ⓘ The suitability of the sensor for your specific case of application has to be determined by the manufacturer.

PHL 63

SCHUNK Grippers pneumatic | 2-Finger Parallel Grippers | Long-stroke Gripper

Gripping force

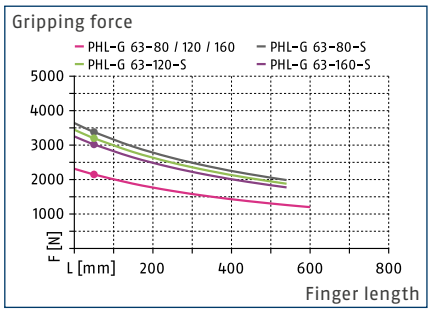

Finger load

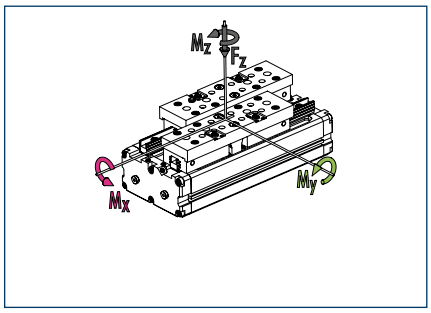

Technical data PHL-G

Description		PHL-G 63-080	PHL-G 63-080-S	PHL-G 63-120	PHL-G 63-120-S	PHL-G 63-160	PHL-G 63-160-S
ID		0308260	0308263	0308261	0308264	0308262	0308265
Stroke per jaw	[mm]	80	80	120	120	160	160
Closing- / opening force	[N]	2150/2150	3380/-	2150/2150	3200/-	2150/2150	3020/-
min. spring force	[N]		1260		1080		900
Weight	[kg]	13.66	17.15	16.47	19.91	19.18	22.67
Recommended workpiece weight	[kg]	10.75	10.75	10.75	10.75	10.75	10.75
Fluid consumption per double stroke	[cm³]	1280	2303	1791	2814	2303	3325
min. / max. operating pressure	[bar]	2/8	4/6.5	2/8	4/6.5	2/8	4/6.5
Nominal operating pressure	[bar]	6	6	6	6	6	6
Closing- / opening time	[s]	1.05/1.05	1.26/2.01	1.4/1.4	1.68/2.67	1.76/1.76	2.1/3.34
max. permitted finger length	[mm]	600	540	600	540	600	540
max. permitted weight per finger	[kg]	12	12	12	12	12	12
IP class		41	41	41	41	41	41
min. / max. ambient temperature	[°C]	5/90	5/90	5/90	5/90	5/90	5/90
Repeat accuracy	[mm]	0.02	0.02	0.02	0.02	0.02	0.02
Moments M_x max./M_y max./M_z max.	[Nm]	258/580/417	258/580/417	283/580/417	283/580/417	308/580/417	308/580/417
Forces F_z max.	[N]	10000	10000	10000	10000	10000	10000

ⓘ The indicated moments and forces are static values, apply per base jaw and may occur simultaneously. M_y may arise in addition to the moment generated by the gripping force itself. If the max. permitted finger weight is exceeded, it is impreative to throttle the air supply so that the jaw movement occurs without any hitting or bouncing. Service life may be reduced.

Gripping force

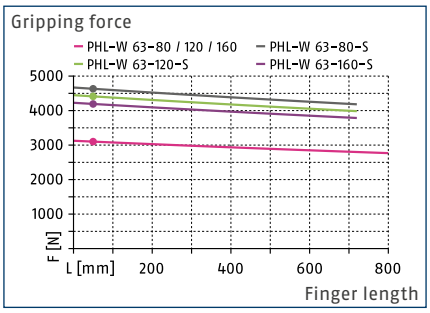

Finger load

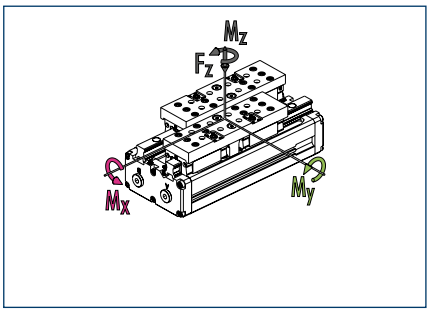

Technical data PHL-W

Description		PHL-W 63-080	PHL-W 63-080-S	PHL-W 63-120	PHL-W 63-120-S	PHL-W 63-160	PHL-W 63-160-S
ID		0308270	0308273	0308271	0308274	0308272	0308275
Stroke per jaw	[mm]	80	80	120	120	160	160
Closing- / opening force	[N]	3100/3100	4630/-	3100/3100	4410/-	3100/3100	4190/-
min. spring force	[N]		1530		1310		1090
Weight	[kg]	15.16	18.65	17.88	21.42	20.69	24.18
Recommended workpiece weight	[kg]	15.5	15.5	15.5	15.5	15.5	15.5
Fluid consumption per double stroke	[cm³]	1280	2303	1791	2814	2303	3325
min. / max. operating pressure	[bar]	2/8	4/6.5	2/8	4/6.5	2/8	4/6.5
Nominal operating pressure	[bar]	6	6	6	6	6	6
Closing- / opening time	[s]	0.94/0.94	1.09/1.74	1.25/1.25	1.46/2.32	1.56/1.56	1.82/2.91
max. permitted finger length	[mm]	800	720	800	720	800	720
max. permitted weight per finger	[kg]	12	12	12	12	12	12
IP class		41	41	41	41	41	41
min. / max. ambient temperature	[°C]	5/90	5/90	5/90	5/90	5/90	5/90
Repeat accuracy	[mm]	0.02	0.02	0.02	0.02	0.02	0.02
Moments M_x max./M_y max./M_z max.	[Nm]	150/1080/417	150/1080/417	175/1080/417	175/1080/417	200/1080/417	200/1080/417
Forces F_z max.	[N]	10000	10000	10000	10000	10000	10000

ⓘ The indicated moments and forces are static values, apply per base jaw and may occur simultaneously. M_y may arise in addition to the moment generated by the gripping force itself. If the max. permitted finger weight is exceeded, it is impreative to throttle the air supply so that the jaw movement occurs without any hitting or bouncing. Service life may be reduced.

PHL 63-080 main view

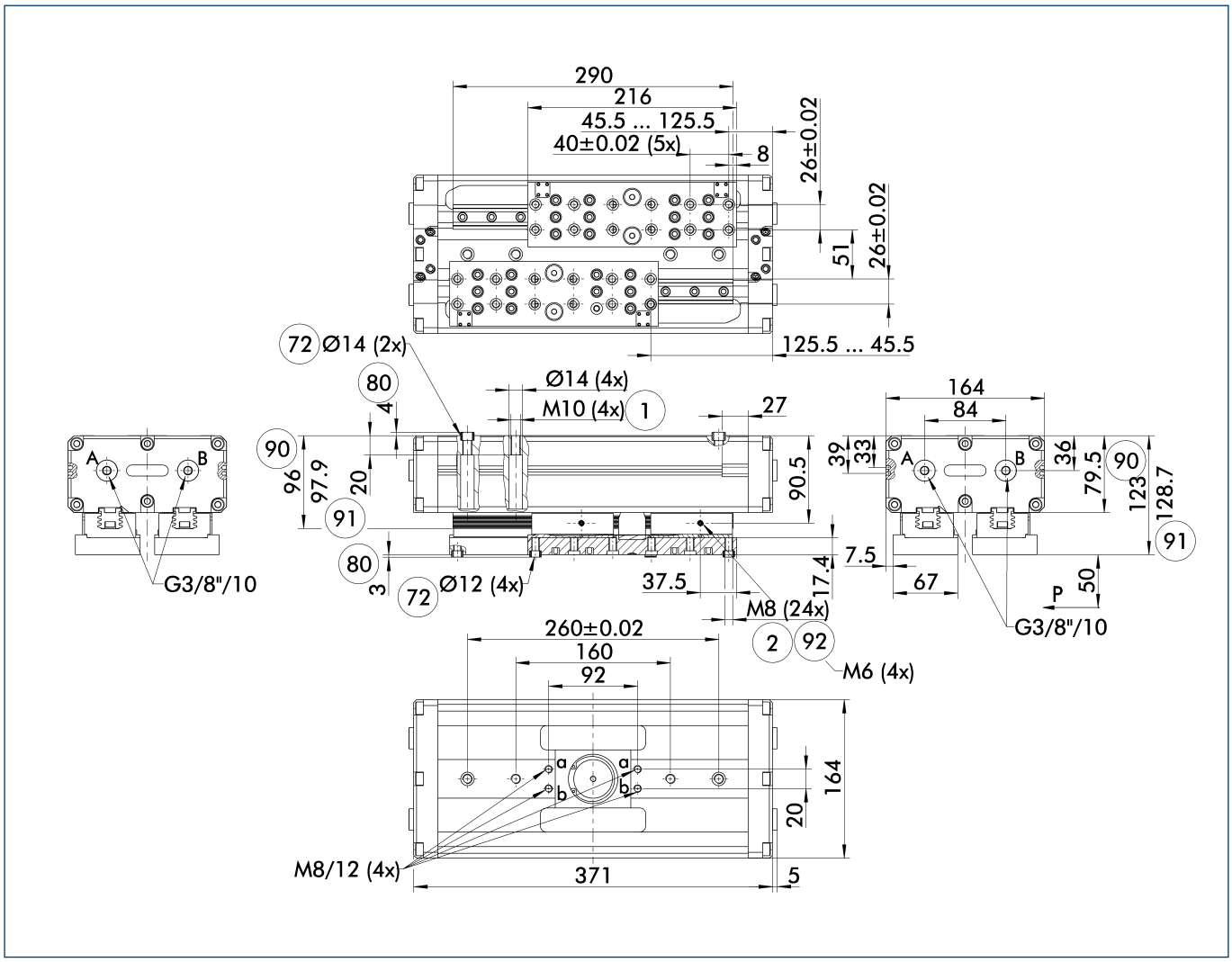

The drawing shows the gripper in the basic version with closed jaws, without dimensional consideration of the options described below.

ⓘ The SDV-P pressure maintenance valve can be used as a gripping force maintenance device (see catalog section on "Accessories").

A, a Main / direct connection, gripper opening

B, b Main / direct connection, gripper closing

(1) Gripper connection

(2) Finger connection

(72) Fit for centering sleeves

(80) Depth of the centering sleeve hole in the mating part

(90) Height of version G

(91) Height of version W

(92) Min. eight screws per base jaw

Maximum permitted finger projection

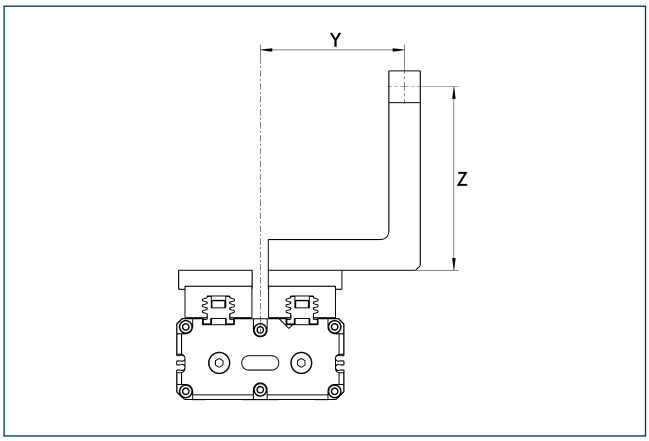

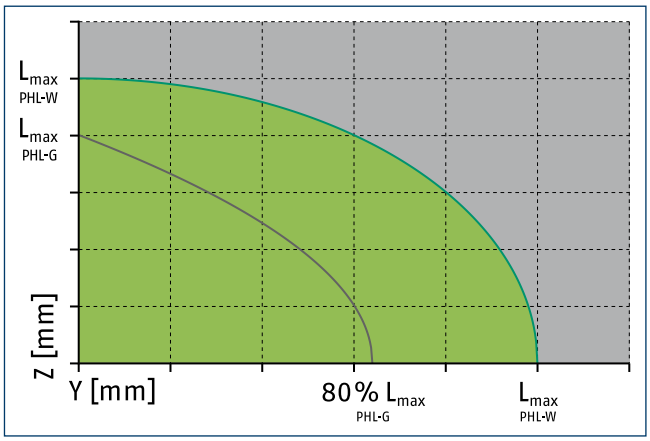

Permitted range Inadmissible range

L_{max} is equivalent to the maximum permitted finger length, see the chart of technical specifications.

Hose-free direct connection M8

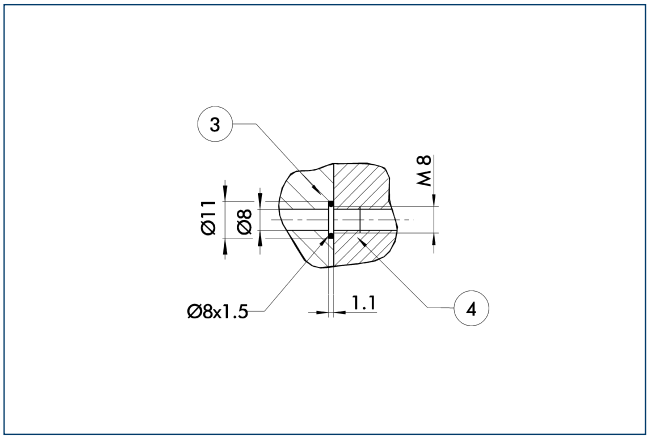

(3) Adapter (4) Gripper

The direct connection is used for supplying compressed air without hoses. Instead, the pressure medium is fed through bore-holes in the mounting plate.

Stroke version PHL 63-120

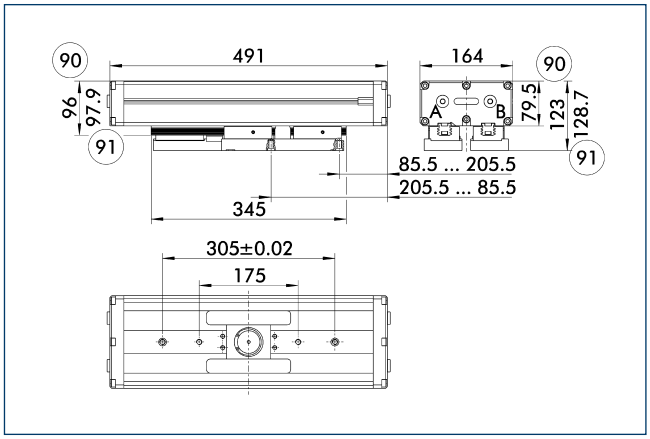

(90) Height of version G (91) Height of version W

The drawing shows changes in dimensions of the versions with a differing stroke compared to the main view of the shown version.

Stroke version PHL 63-160

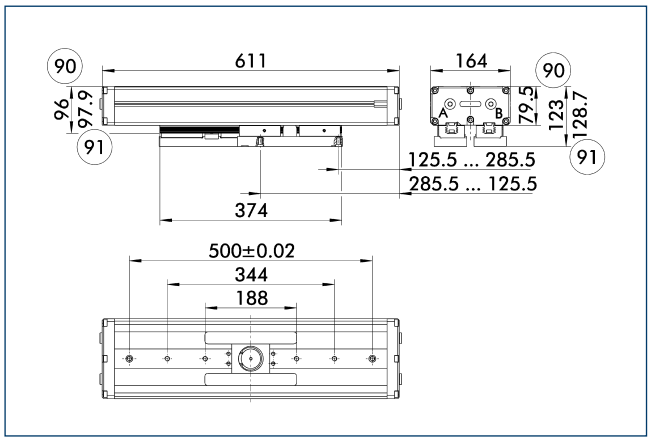

(90) Height of version G

(91) Height of version W

The drawing shows changes in dimensions of the versions with a differing stroke compared to the main view of the shown version.

Gripping force maintenance device

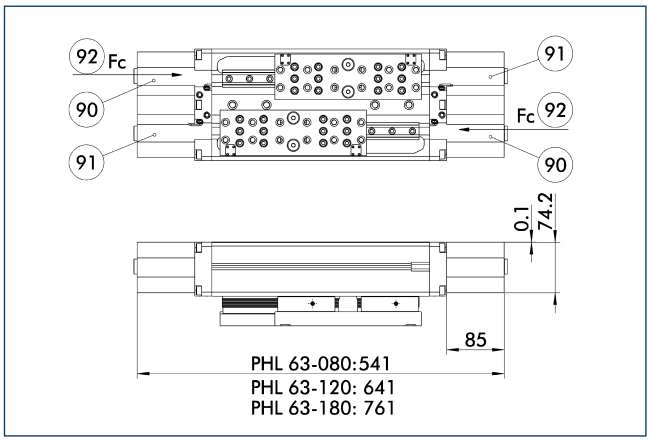

(90) Piston chamber with spring

(91) Piston chamber without spring

(92) Direction of force of the compression springs

The mechanical gripping force maintenance ensures a minimum clamping force even if there is a drop in pressure. This acts as the closing force in the S variant. The design of the top jaws means that they can also be used as an opening force. Besides this, the gripping force maintenance can be used to increase gripping force.

ⓘ The gripper is shown in the basic position, closed by springs.

Intermediate jaw interface

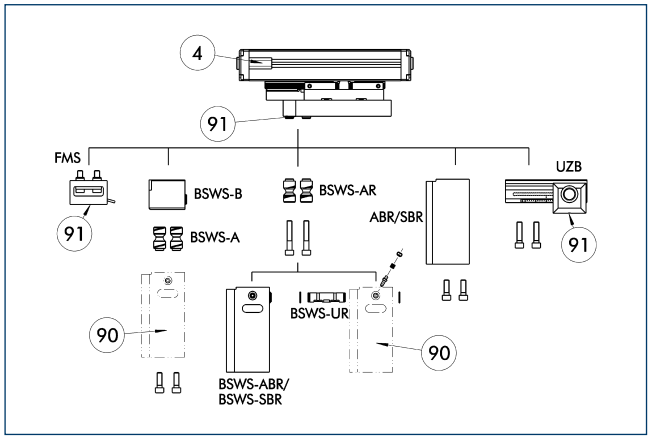

(4) Gripper

(90) Customized gripper fingers

(91) Uniform screw connection pattern

By using the intermediate jaw, you have the possibility of directly connecting a wide range of accessories directly. This includes force measuring jaws, jaw quick-change systems, finger blanks, and universal intermediate jaws.

SDV-P pressure maintenance valve

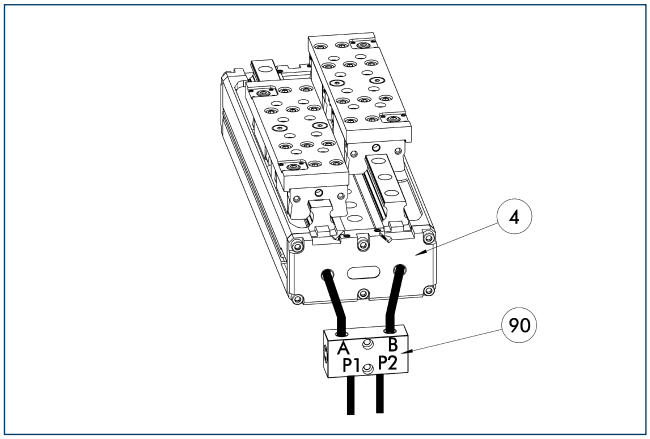

(4) Gripper

(90) SDV-P pressure maintenance valve

The SDV-P pressure maintenance valves ensure that the pressure in the piston chamber of pneumatic gripping, rotary, linear, and quick-change modules is maintained temporarily during an emergency stop.

Description	ID	
Pressure maintenance valve		
SDV-P 04	0403130	

ZBA PHL 63 intermediate jaws

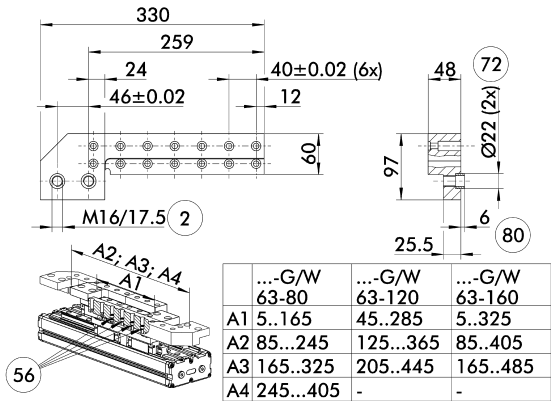

	...-G/W 63-80	...-G/W 63-120	...-G/W 63-160
A1	5..165	45..285	5..325
A2	85...245	125...365	85..405
A3	165..325	205..445	165..485
A4	245...405	-	-

(2) Finger connection
(56) Included in delivery
(72) Fit for centering sleeves
(80) Depth of the centering sleeve hole in the mating part

Optionally intermediate jaws can be used, enabling direct connection and alignment of top jaws and various standard accessories in Z-direction.

Description	ID	Material	Scope of delivery
Intermediate jaws			
ZBA-PHL 63	0308269	Aluminum	2

Mounting kit for proximity switch

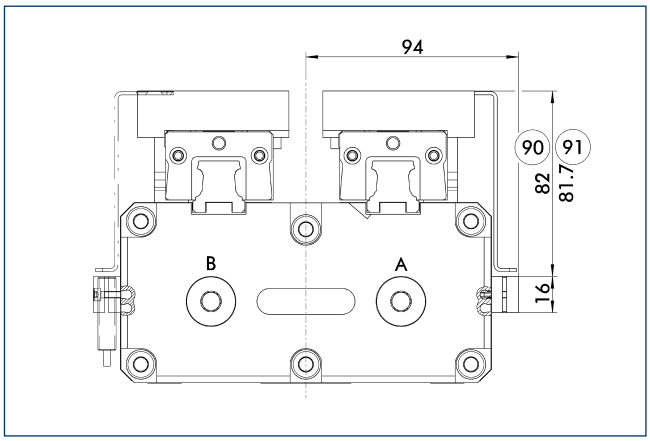

(90) Height of version G
(91) Height of version W

Limit position monitor can be mounted with mounting kit.

Description	ID	
Mounting kit for proximity switch		
AS-PHL063-IN80	0308834	

ⓘ This mounting kit needs to be ordered optionally as an accessory.

Inductive proximity switches

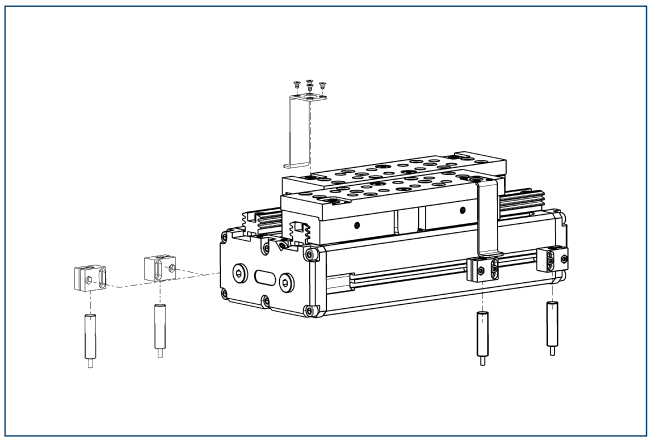

Limit position monitor can be mounted with mounting kit.

Description	ID	Often combined
Mounting kit for proximity switch		
AS-PHL063-IN80	0308834	
Inductive proximity switches		
IN 80-S-M12	0301578	
IN 80-S-M8	0301478	●
INK 80-S	0301550	
Cable extensions		
KV BG12-SG12 3P-0030-PNP	0301999	
KV BG12-SG12 3P-0060-PNP	0301998	
KV BW08-SG08 3P-0030-PNP	0301495	
KV BW08-SG08 3P-0100-PNP	0301496	
KV BW08-SG08 3P-0200-PNP	0301497	●
KV BW12-SG12 3P-0030-PNP	0301595	
KV BW12-SG12 3P-0100-PNP	0301596	
KV BW12-SG12 3P-0200-PNP	0301597	
Clip for plug / socket		
CLI-M12	0301464	
CLI-M8	0301463	
Connection cables		
KA BG08-L 3P-0300-PNP	0301622	●
KA BG08-L 3P-0500-PNP	0301623	
KA BG12-L 3P-0500-PNP	30016369	
KA BW08-L 3P-0300-PNP	0301594	
KA BW08-L 3P-0500-PNP	0301502	
KA BW12-L 3P-0300-PNP	0301503	
KA BW12-L 3P-0500-PNP	0301507	
Sensor distributor		
V2-M8	0301775	●
V2-M12	0301776	●
V4-M12	0301747	
V4-M8	0301746	
V8-M12	0301752	
V8-M8	0301751	

ⓘ Two sensors (closer/S) are required for each unit, plus extension cables as an option. This mounting kit needs to be ordered optionally as an accessory. Please note the minimum permitted bending radii for the sensor cables, which are generally 35 mm.

MMS electronic magnetic switches

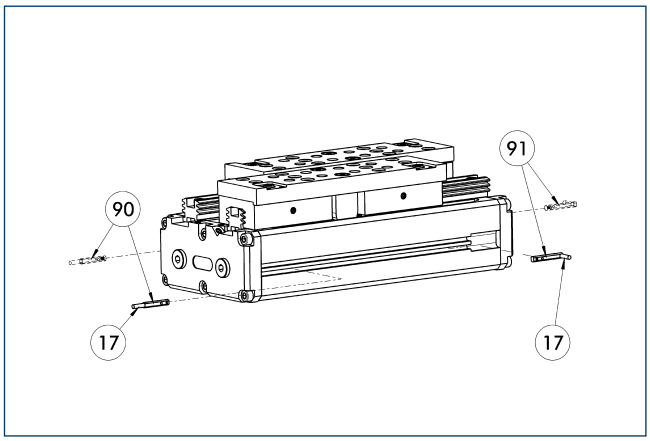

(17) Cable outlet
(91) MMS 22...-SA sensor
(90) MMS 22... sensor

End position monitoring for mounting in the C-slot.

Description	ID	Often combined
MMS electronic magnetic switches		
MMS 22-S-M8-PNP	0301032	●
MMSK 22-S-PNP	0301034	
MMS electronic magnetic switches with lateral cable outlet		
MMS 22-S-M8-PNP-SA	0301042	●
MMSK 22-S-PNP-SA	0301044	
Cable extensions		
KV BW08-SG08 3P-0030-PNP	0301495	
KV BW08-SG08 3P-0100-PNP	0301496	
KV BW08-SG08 3P-0200-PNP	0301497	●
Clip for plug / socket		
CLI-M8	0301463	
Connection cables		
KA BG08-L 3P-0300-PNP	0301622	●
KA BG08-L 3P-0500-PNP	0301623	
KA BW08-L 3P-0300-PNP	0301594	
KA BW08-L 3P-0500-PNP	0301502	
Sensor distributor		
V2-M8	0301775	●
V4-M8	0301746	
V8-M8	0301751	

ⓘ Two sensors (closer/S) are required for each unit, plus extension cables as an option. Please note the minimum permitted bending radii for the sensor cables, which are generally 35 mm.

MMS PI1 programmable magnetic switches

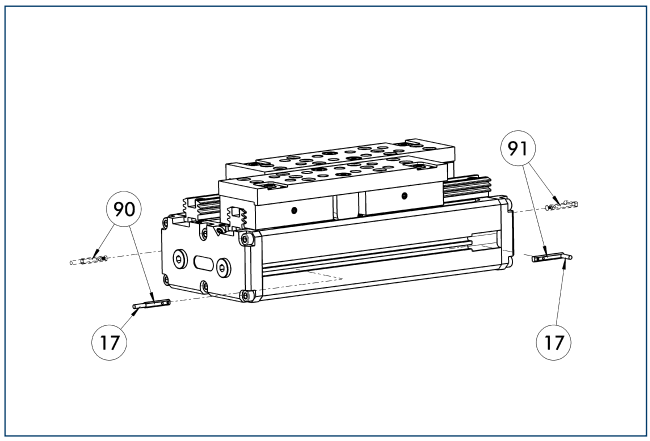

(17) Cable outlet
(91) MMS 22...-PI1-...-SA sensor
(90) MMS 22...-PI1-... sensor

Position query with one programmable position per sensor and electronics integrated in sensor. Programmable via MT magnet teaching tool (included in the scope of delivery) or ST plug teaching tool (optional). Limit position query mounted in C-groove. If the ST plug teaching tools are listed in the table, teaching can only take place with the ST plug teaching tools.

Description	ID	Often combined
MMS PI1 programmable magnetic switches		
MMS 22-PI1-S-M8-PNP	0301160	●
MMSK 22-PI1-S-PNP	0301162	
MMS PI1-HD programmable magnetic switches with stainless steel housing		
MMS 22-PI1-S-M8-PNP-HD	0301110	●
MMSK 22-PI1-S-PNP-HD	0301112	
MMS PI1 programmable magnetic switches with lateral cable outlet		
MMS 22-PI1-S-M8-PNP-SA	0301166	●
MMSK 22-PI1-S-PNP-SA	0301168	

ⓘ Two sensors (closer/S) are required for each unit, plus extension cables as an option. Please note the minimum permitted bending radii for the sensor cables, which are generally 35 mm. Connection cable, cable extensions, and sensor distributors can be found in the table for the MMS 22.

Analog position sensor

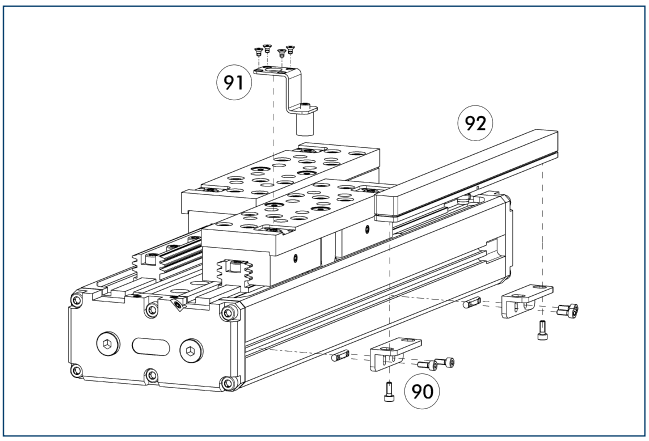

(90) Sensor bracket
(92) BIL sensor
(91) Switching cam

The drawing shows the mounting kit of the BIL stroke measuring system. The corresponding sensor must be ordered directly from the manufacturer.

Description	ID	
Mounting kit for APS		
AS-BIL-PHL 63	0308794	

ⓘ The suitability of the sensor for your specific case of application has to be determined by the manufacturer.

Loadable. Flexible. Reliable.

PFH-mini Long-stroke Gripper

Gripper with large jaw stroke for large parts and / or a broad range of parts

Field of Application

Clean to slightly dirty environments

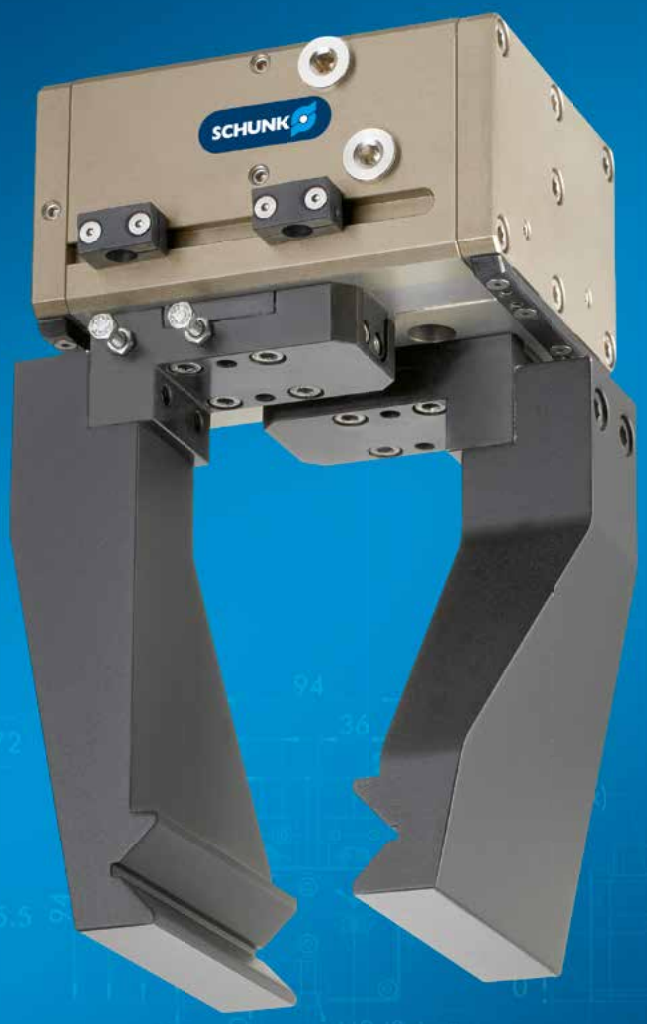

Advantages – Your benefit

Solid guides for the precise handling of different kinds of workpieces

High maximum moments possible suitable for using long gripper fingers

Double piston rack and pinion principle for centric clamping

Mounting from two sides in three screw directions for universal and flexible gripper assembly

Air supply via hose-free direct connection or screw connections for flexible pressure supply in all automated systems

Sizes	Weight	Gripping force	Stroke per jaw	Workpiece weight
Quantity: 3	2.65 .. 12.6 kg	630 .. 2950 N	30 .. 100 mm	3.15 .. 13 kg

Functional Description

By pressure actuation of the opposing piston, the base jaws, everyone is guided by a carrier on the piston, are set in motion.

The jaw stroke is synchronized by means of rack and pinion kinematics.

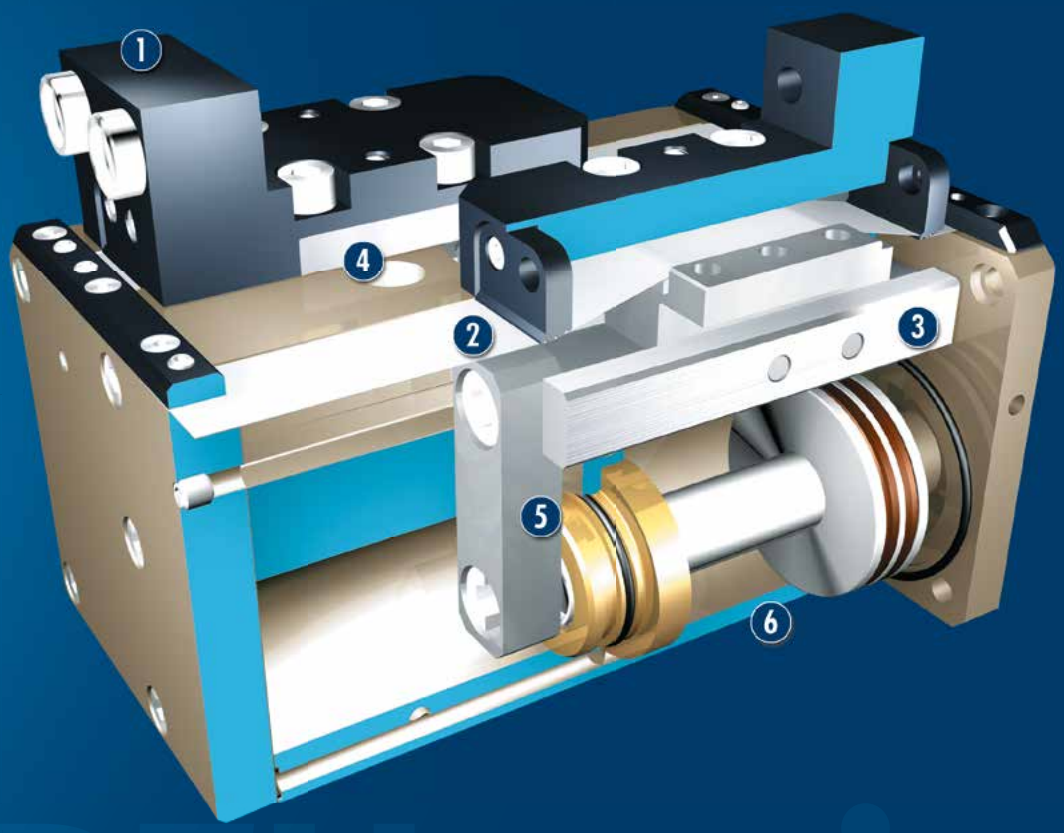

① **Base jaw**
for the connection of workpiece-specific gripper fingers

② **Dust cover**
along the whole guidance length against coarse dirt

③ **Sliding guide**
for precise gripping with minimal play at a high load capacity

④ **Centering and mounting possibilities**
for universal assembly of the gripper

⑤ **Kinematics**
Double piston rack and pinion principle for centric clamping

⑥ **Housing**
Weight-optimized through application of high-strength aluminum alloy

CAD data, operating manuals and other current product documents are available at **www.schunk.com**

General Notes about the Series

Operating principle: Double piston rack and pinion principle

Housing material: Aluminum alloy, anodized

Base jaw material: Steel

Actuation: pneumatic, with filtered compressed air as per DIN ISO 8573-1: 7 4 4

Warranty: 24 months (details, general terms and conditions and operating manuals can be downloaded at www.schunk.com)

Scope of delivery: Mount for proximity switch, centering sleeves, O-rings for direct connection, assembly and operating manual with declaration of incorporation.

Gripping force maintenance device: possible with SDV-P pressure maintenance valve

Gripping force: is the arithmetic total of the gripping force applied to each gripper jaw at distance P (see illustration).

Finger length: is measured from the upper edge of the gripper housing in the direction of the main axis. The breach of the max. permitted finger length can bring higher abrasion. The maximum permissible finger length applies up to the nominal operating pressure. With higher pressures, the finger length must be reduced proportionally to the nominal operating pressure.

Repeat accuracy: is defined as the spread of the limit position after 100 consecutive strokes.

Workpiece weight: is calculated for a force-fit connection with a coefficient of friction of 0.1 and a safety factor of 2 against slippage of the workpiece on acceleration due to gravity g. Considerably heavier workpiece weights are permitted with form-fit gripping.

Closing and opening times: are purely the times that the base jaws or fingers are in motion. Valve switching times, hose filling times or PLC reaction times are not included in the above times and must be taken into consideration when determining cycle times.

Application example

Assembly unit for intermediate sleeves with various diameters. The unit is equipped with a collision protection device to prevent damages.

1. PFH 2-Finger Parallel Gripper with workpiece-specific gripper fingers
2. OPS-plus collision and overload protection device

SCHUNK offers more ...

The following components make the product PFH-mini even more productive – the suitable addition for the highest functionality, flexibility, reliability, and controlled production.

Centering Sleeves

Fittings

Magnetic Switches

Inductive Proximity Switches

Sensor Distributor

Gripper Pads

Sensor Cables

Plastic Inserts

SDV-P Pressure Maintenance Valve

Finger Blanks

Flexible Position Sensor

ⓘ Further information regarding the products can be found on the following product pages or at www.schunk.com. Please contact us for further information: SCHUNK technical hotline +49-7133-103-2696

Options and special Information

Gripping force maintenance version AS / IS: The mechanical gripping force maintenance version ensures a minimum gripping force also in the case of a drop in pressure. In the AS / S version this has the effect of a closing force, in the IS version of an opening force.
Gripper with guide cover: against heavy contamination

PFH-mini 30

SCHUNK Grippers pneumatic | 2-Finger Parallel Grippers | Long-stroke Gripper

Gripping force, O.D. gripping

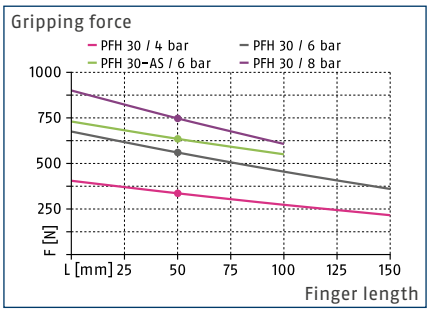

Gripping force, I.D. gripping

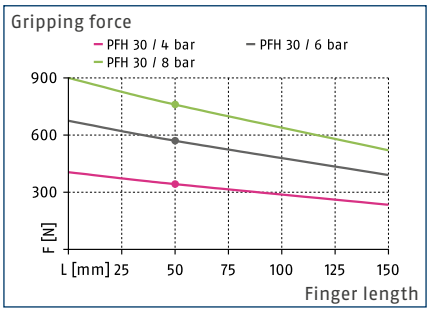

Finger load

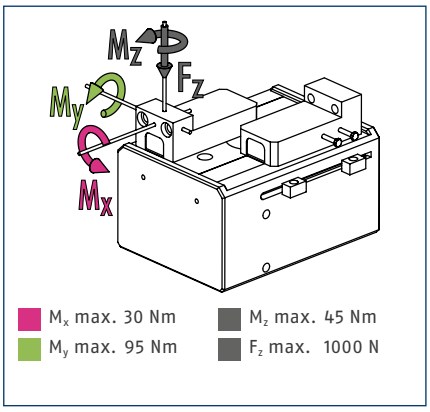

ⓘ The indicated moments and forces are static values, apply per base jaw and may occur simultaneously. M_y may arise in addition to the moment generated by the gripping force itself. If the max. permitted finger weight is exceeded, it is impreative to throttle the air supply so that the jaw movement occurs without any hitting or bouncing. Service life may be reduced.

Technical data

Description		PFH 30	PFH 30-60	PFH 30-AS
ID		0302030	0302033	0302031
Stroke per jaw	[mm]	30	60	30
Closing- / opening force	[N]	630/570	630/570	720/-
min. spring force	[N]			90
Weight	[kg]	2.65	3.5	2.7
Recommended workpiece weight	[kg]	3.15	3.15	3.15
Fluid consumption per double stroke	[cm³]	95	187	95
min. / max. operating pressure	[bar]	2/8	2/8	5/6.5
Nominal operating pressure	[bar]	6	6	6
Closing- / opening time	[s]	0.3/0.3	0.4/0.5	0.35/0.35
Closing- / opening time only with spring	[s]			0.40
max. permitted finger length	[mm]	150	150	100
max. permitted weight per finger	[kg]	2	2	2
IP class		41	41	41
min. / max. ambient temperature	[°C]	5/90	5/90	5/90
Repeat accuracy	[mm]	0.05	0.05	0.05

ⓘ Requirements on the levelness of the bolting surface (in relation to the entire bolting surface for the gripper):
- < 0.02 mm with an edge length of up to 100 mm
- < 0.05 mm with an edge length of 100 mm or longer

Main view

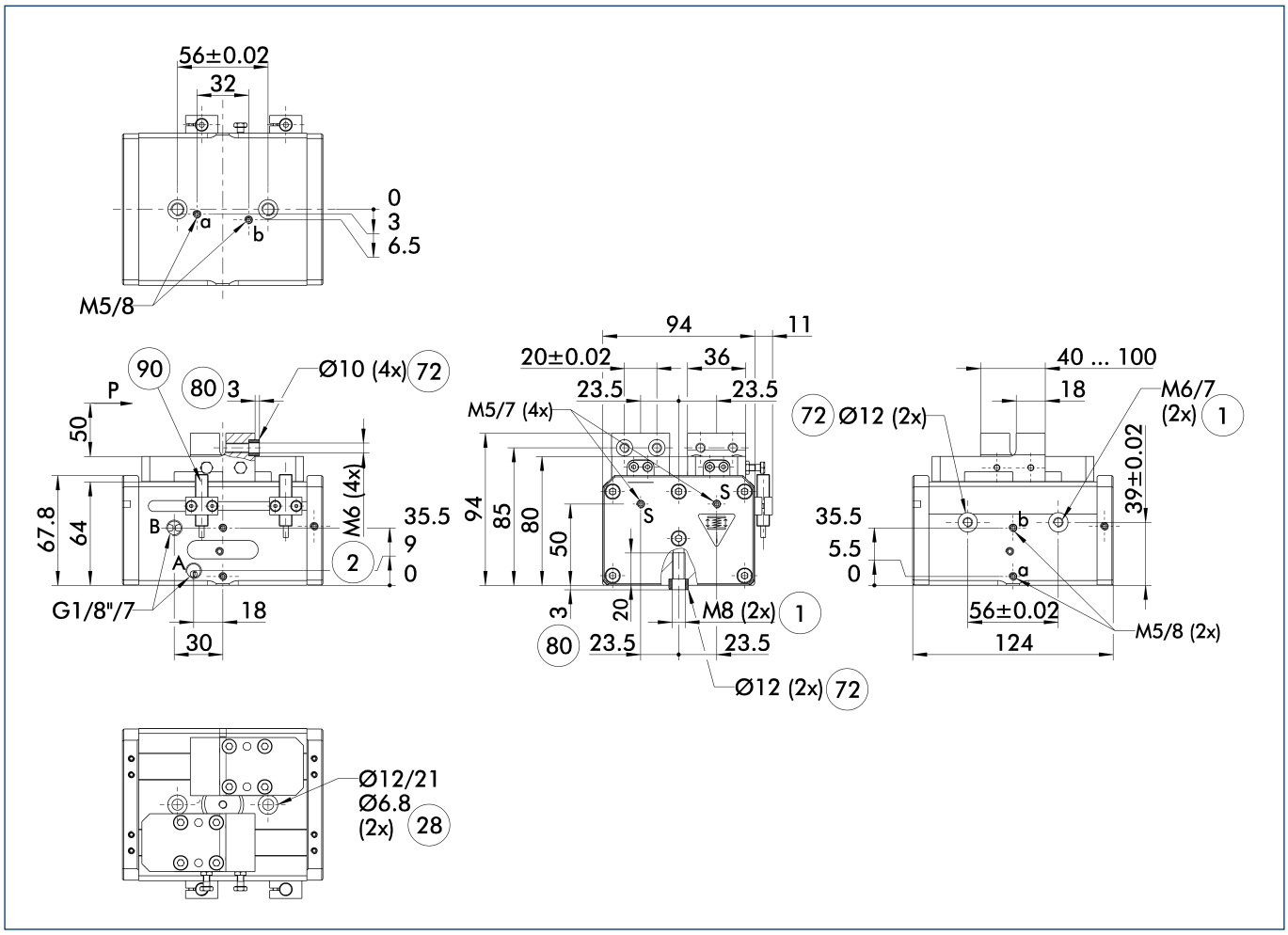

The drawing shows the gripper in the basic version with closed jaws, without dimensional consideration of the options described below.

ⓘ The SDV-P pressure maintenance valve can also be used for I.D. or O.D. gripping alternatively or in addition to the spring-loaded, mechanical gripping force maintenance device (see catalog section on "Accessories").

A, a Main / direct connection, gripper opening

B, b Main / direct connection, gripper closing

S Air purge connection (0.5 ... 1 bar)

(1) Gripper connection

(2) Finger connection

(28) Through-bore

(72) Fit for centering sleeves

(80) Depth of the centering sleeve hole in the mating part

(90) IN ... sensor

Maximum permitted finger projection

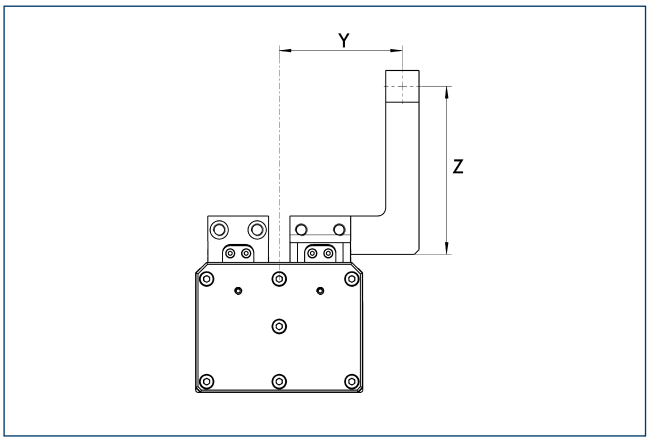

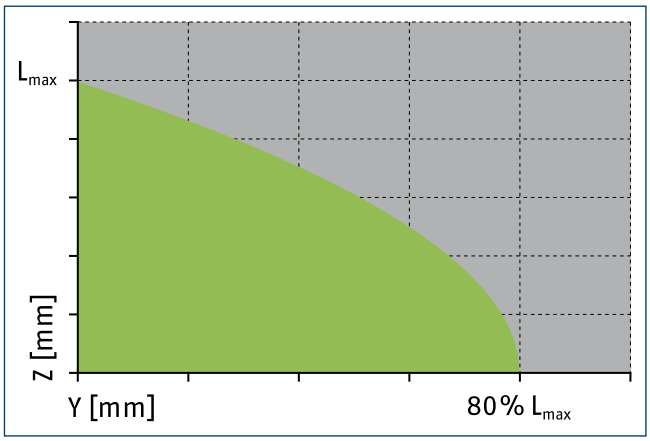

Permitted range

Inadmissible range

L_{max} is equivalent to the maximum permitted finger length, see the chart of technical specifications.

Hose-free direct connection M5

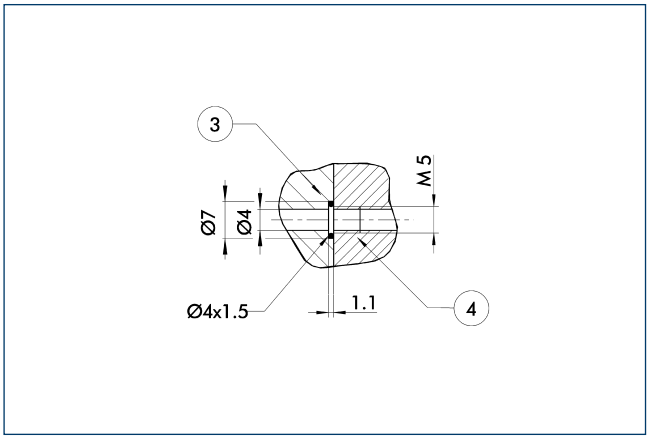

(3) Adapter

(4) Gripper

The direct connection is used for supplying compressed air without hoses. Instead, the pressure medium is fed through bore-holes in the mounting plate.

Stroke versions

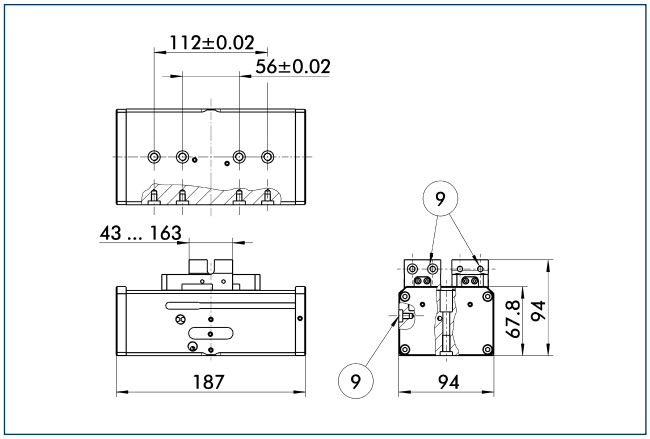

(9) For mounting screw connection diagram, see basic version

The drawing shows changes in dimensions of the versions with a differing stroke compared to the main view of the shown version.

Intermediate jaw interface

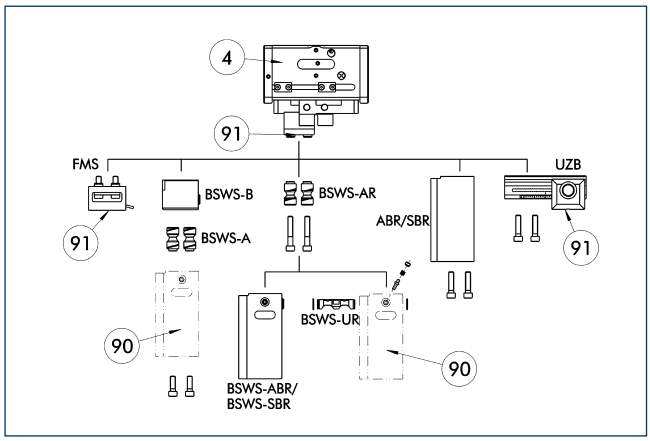

(4) Gripper
(90) Customized gripper fingers
(91) Uniform screw connection pattern

By using the intermediate jaw, you have the possibility of directly connecting a wide range of accessories directly. This includes force measuring jaws, jaw quick-change systems, finger blanks, and universal intermediate jaws.

SDV-P pressure maintenance valve

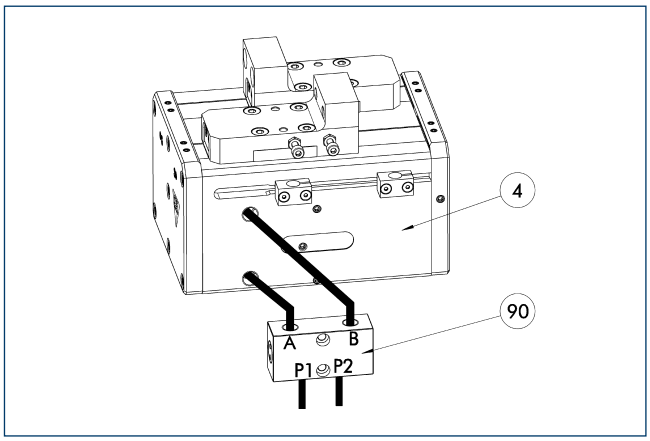

(4) Gripper
(90) SDV-P pressure maintenance valve

The SDV-P pressure maintenance valves ensure that the pressure in the piston chamber of pneumatic gripping, rotary, linear, and quick-change modules is maintained temporarily during an emergency stop.

Description	ID	
Pressure maintenance valve		
SDV-P 04	0403130	

ZBA PFH 30 intermediate jaws

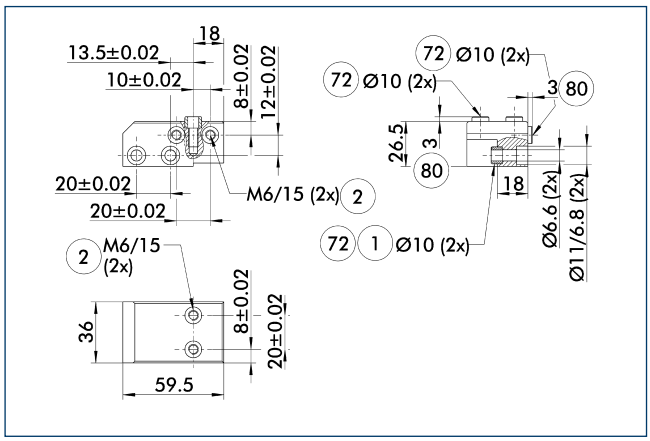

(1) Gripper connection
(2) Finger connection
(72) Fit for centering sleeves
(80) Depth of the centering sleeve hole in the mating part

Optionally intermediate jaws can be used, enabling direct connection and alignment of top jaws and various standard accessories in Z-direction.

Description	ID	Material	Scope of delivery
Intermediate jaws			
ZBA-PFH 30	0300220	Aluminum	2

Inductive proximity switches

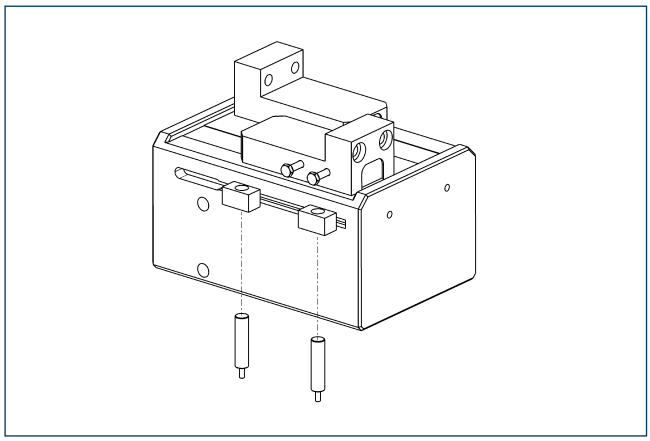

Directly mounted limit position monitor.

Description	ID	Often combined
Inductive proximity switches		
IN 80-S-M12	0301578	
IN 80-S-M8	0301478	●
INK 80-S	0301550	
Cable extensions		
KV BG12-SG12 3P-0030-PNP	0301999	
KV BG12-SG12 3P-0060-PNP	0301998	
KV BW08-SG08 3P-0030-PNP	0301495	
KV BW08-SG08 3P-0100-PNP	0301496	
KV BW08-SG08 3P-0200-PNP	0301497	●
KV BW12-SG12 3P-0030-PNP	0301595	
KV BW12-SG12 3P-0100-PNP	0301596	
KV BW12-SG12 3P-0200-PNP	0301597	
Clip for plug / socket		
CLI-M12	0301464	
CLI-M8	0301463	
Connection cables		
KA BG08-L 3P-0300-PNP	0301622	●
KA BG08-L 3P-0500-PNP	0301623	
KA BG12-L 3P-0500-PNP	30016369	
KA BW08-L 3P-0300-PNP	0301594	
KA BW08-L 3P-0500-PNP	0301502	
KA BW12-L 3P-0300-PNP	0301503	
KA BW12-L 3P-0500-PNP	0301507	
Sensor distributor		
V2-M8	0301775	●
V2-M12	0301776	●
V4-M12	0301747	
V4-M8	0301746	
V8-M12	0301752	
V8-M8	0301751	

ⓘ Two sensors (closer/S) are required for each unit, plus extension cables as an option. Please note the minimum permitted bending radii for the sensor cables, which are generally 35 mm.

Flexible position sensor

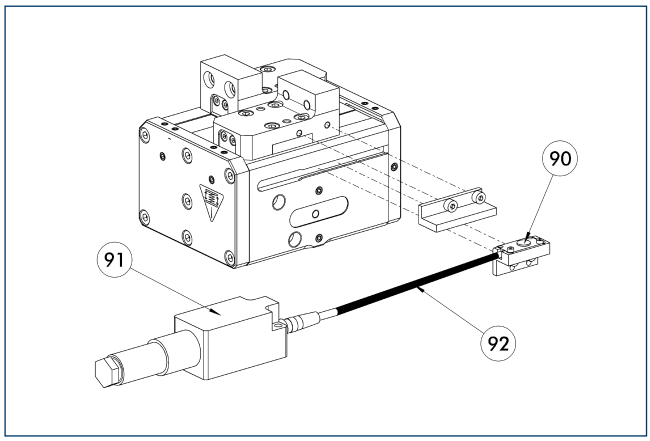

90 FPS-S sensor
91 FPS-F5 / -F5 T electronic processor
92 Cable extensions

Flexible position monitoring of up to five positions.

Description	ID	Often combined
Mounting kit for FPS		
AS-FPS-PFH 30	0301733	
Electronic processor		
FPS-F5 T	0301807	
FPS-F5	0301805	●
Sensor		
FPS-S 13	0301705	

ⓘ When using a FPS system, a FPS sensor (FPS-S) and a control unit (FPS-F5 / F5 T) are required for each gripper as well as a mounting kit (AS), if listed. Cable extensions (KV) are available as options in the "Accessories" catalog section.

PFH-mini 40

SCHUNK Grippers pneumatic | 2-Finger Parallel Grippers | Long-stroke Gripper

Gripping force, O.D. gripping

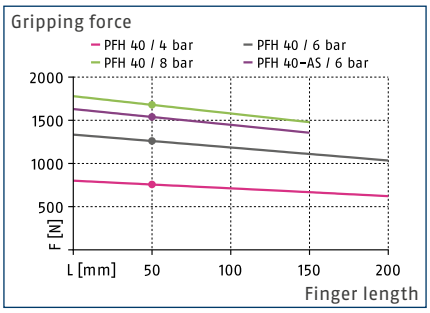

Gripping force, I.D. gripping

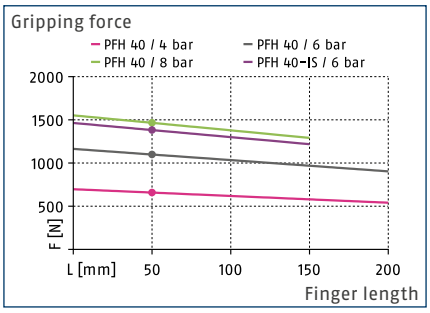

Finger load

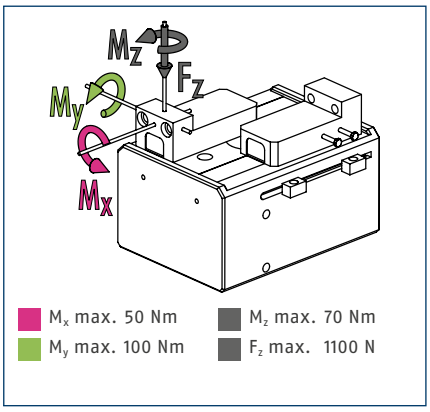

ⓘ The indicated moments and forces are static values, apply per base jaw and may occur simultaneously. M_y may arise in addition to the moment generated by the gripping force itself. If the max. permitted finger weight is exceeded, it is impreative to throttle the air supply so that the jaw movement occurs without any hitting or bouncing. Service life may be reduced.

Technical data

Description		PFH 40	PFH 40-80	PFH 40-AS	PFH 40-IS
ID		0302040	0302043	0302041	0302042
Stroke per jaw	[mm]	40	80	40	40
Closing- / opening force	[N]	1260/1100	1260/1100	1540/-	-/1380
min. spring force	[N]			280	280
Weight	[kg]	4.6	6.2	4.7	4.7
Recommended workpiece weight	[kg]	6.3	6.3	6.3	5.5
Fluid consumption per double stroke	[cm³]	245	487	245	245
min. / max. operating pressure	[bar]	2/8	2/8	5/6.5	5/6.5
Nominal operating pressure	[bar]	6	6	6	6
Closing- / opening time	[s]	0.3/0.3	0.5/0.6	0.25/0.4	0.4/0.25
Closing- / opening time only with spring	[s]			0.70	0.70
max. permitted finger length	[mm]	200	200	150	150
max. permitted weight per finger	[kg]	3	3	3	3
IP class		41	41	41	41
min. / max. ambient temperature	[°C]	5/90	5/90	5/90	5/90
Repeat accuracy	[mm]	0.05	0.05	0.05	0.05

ⓘ Requirements on the levelness of the bolting surface (in relation to the entire bolting surface for the gripper):
- < 0.02 mm with an edge length of up to 100 mm
- < 0.05 mm with an edge length of 100 mm or longer

Main view

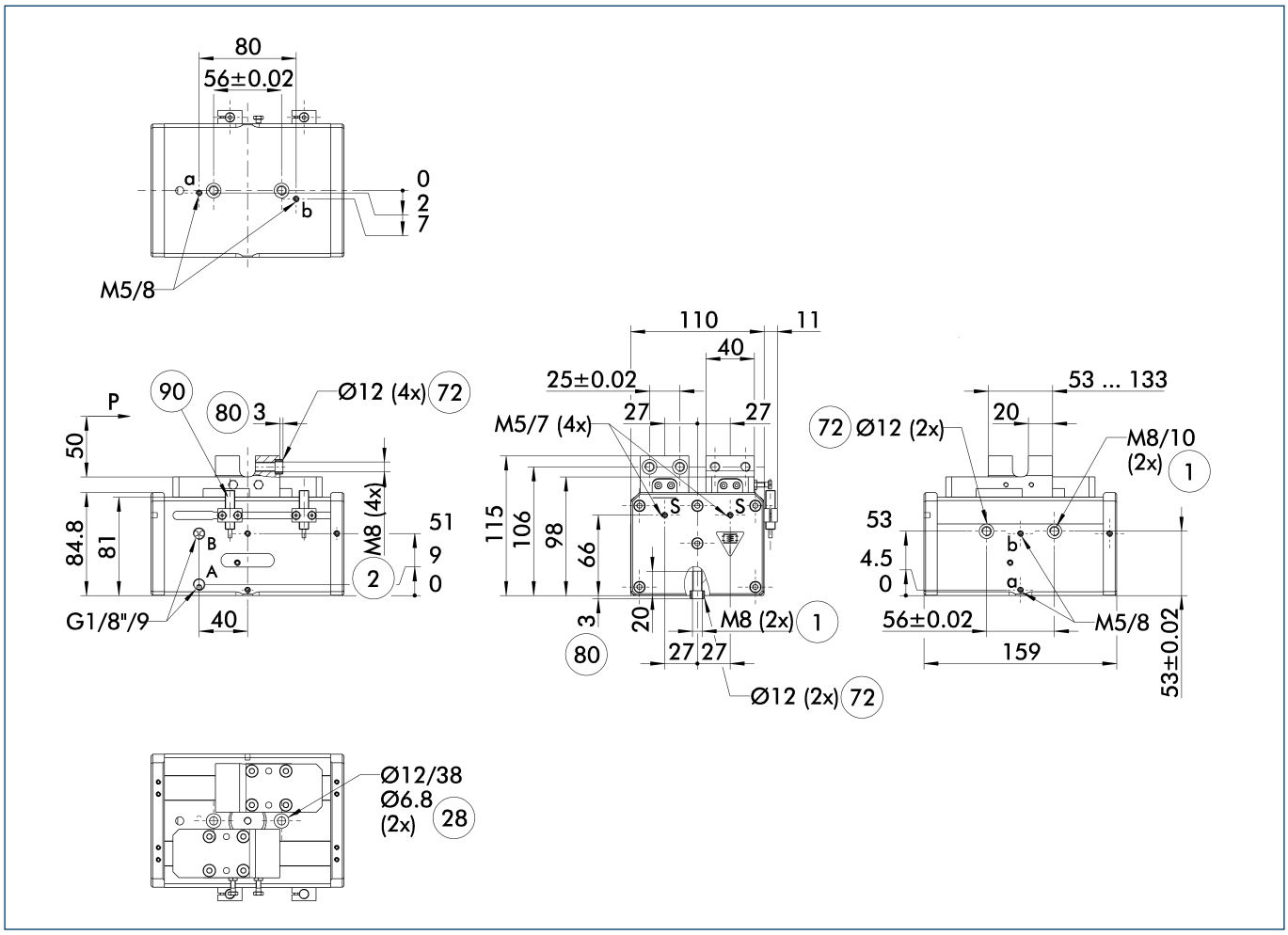

The drawing shows the gripper in the basic version with closed jaws, without dimensional consideration of the options described below.

ⓘ The SDV-P pressure maintenance valve can also be used for I.D. or O.D. gripping alternatively or in addition to the spring-loaded, mechanical gripping force maintenance device (see catalog section on "Accessories").

A, a Main / direct connection, gripper opening

B, b Main / direct connection, gripper closing

S Air purge connection (0.5 ... 1 bar)

(1) Gripper connection

(2) Finger connection

(28) Through-bore

(72) Fit for centering sleeves

(80) Depth of the centering sleeve hole in the mating part

(90) IN ... sensor

Maximum permitted finger projection

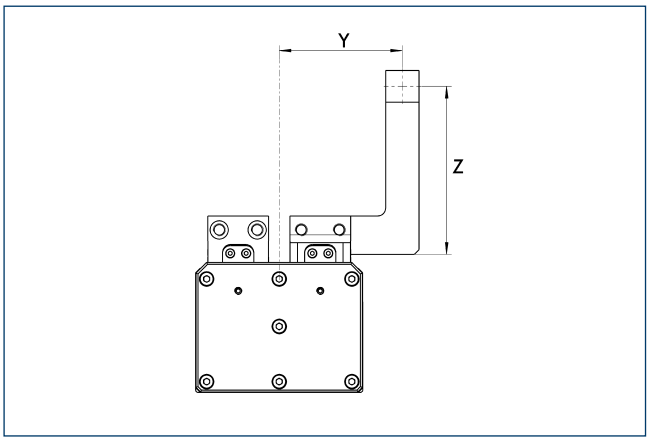

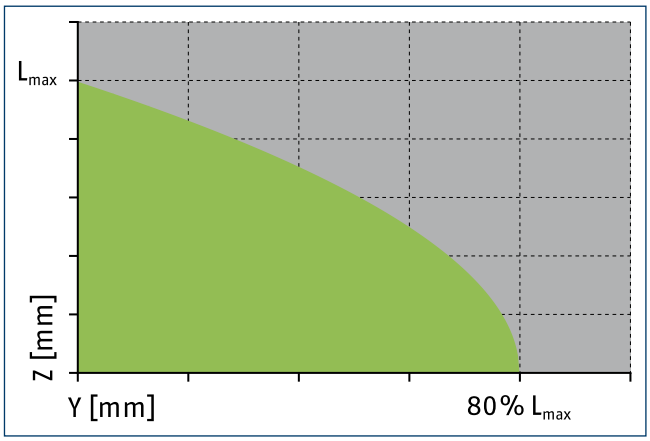

Permitted range Inadmissible range

L_{max} is equivalent to the maximum permitted finger length, see the chart of technical specifications.

Hose-free direct connection M5

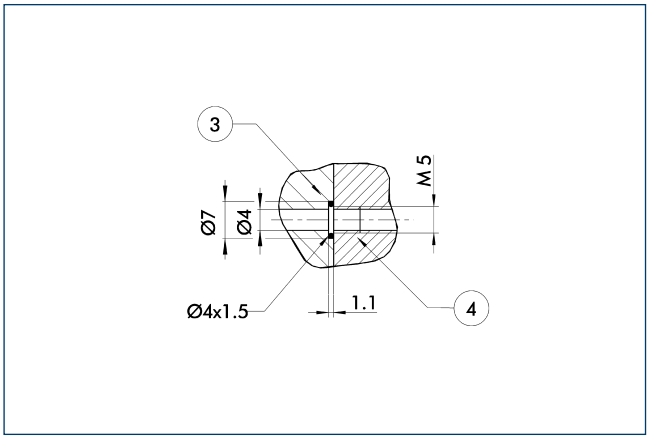

(3) Adapter (4) Gripper

The direct connection is used for supplying compressed air without hoses. Instead, the pressure medium is fed through bore-holes in the mounting plate.

Stroke versions

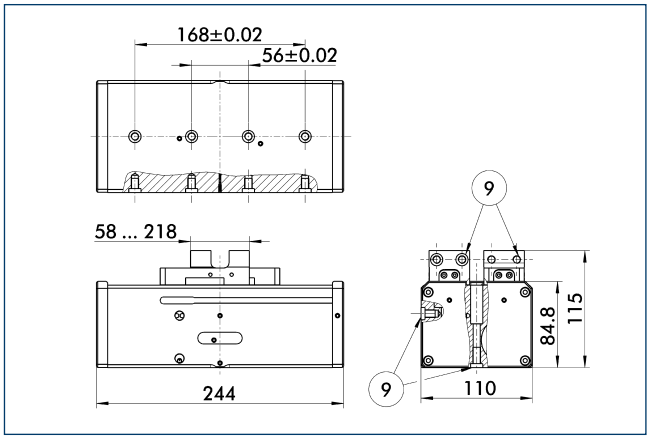

(9) For mounting screw connection diagram, see basic version

The drawing shows changes in dimensions of the versions with a differing stroke compared to the main view of the shown version.

Intermediate jaw interface

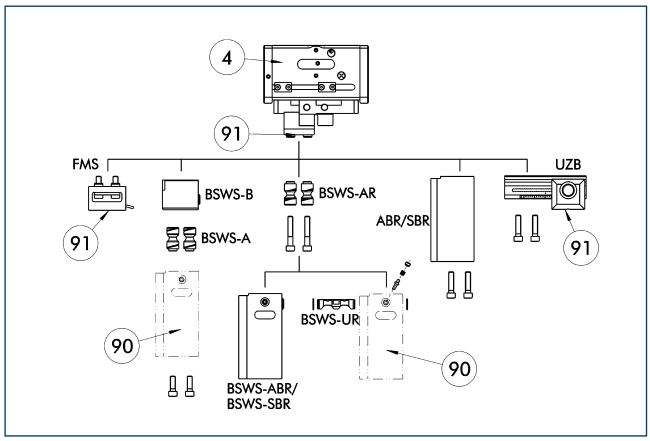

(4) Gripper
(90) Customized gripper fingers
(91) Uniform screw connection pattern

By using the intermediate jaw, you have the possibility of directly connecting a wide range of accessories directly. This includes force measuring jaws, jaw quick-change systems, finger blanks, and universal intermediate jaws.

SDV-P pressure maintenance valve

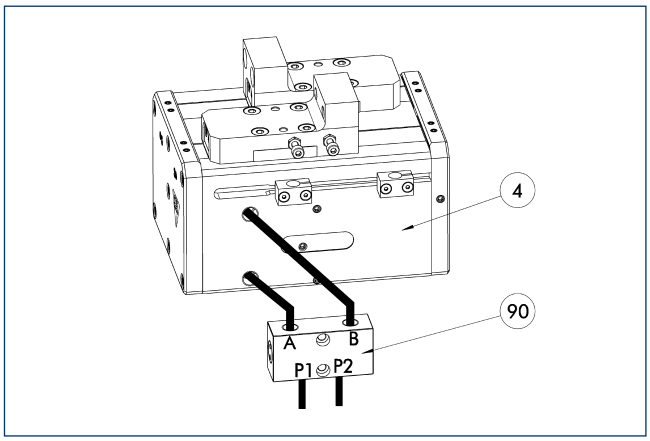

(4) Gripper
(90) SDV-P pressure maintenance valve

The SDV-P pressure maintenance valves ensure that the pressure in the piston chamber of pneumatic gripping, rotary, linear, and quick-change modules is maintained temporarily during an emergency stop.

Description	ID	
Pressure maintenance valve		
SDV-P 04	0403130	

ZBA PFH 40 intermediate jaws

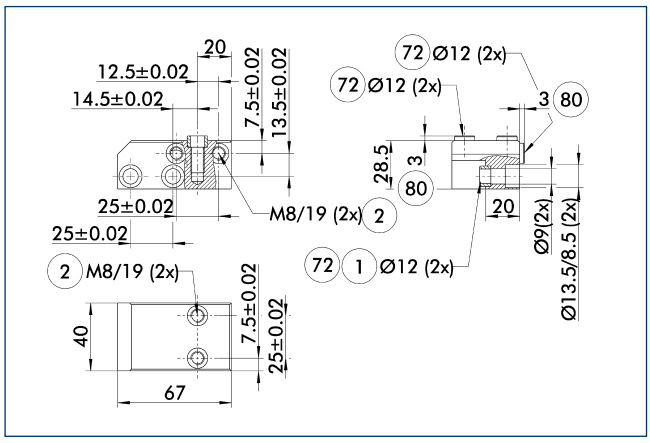

(1) Gripper connection
(2) Finger connection
(72) Fit for centering sleeves
(80) Depth of the centering sleeve hole in the mating part

Optionally intermediate jaws can be used, enabling direct connection and alignment of top jaws and various standard accessories in Z-direction.

Description	ID	Material	Scope of delivery
Intermediate jaws			
ZBA-PFH 40	0300221	Aluminum	2

Inductive proximity switches

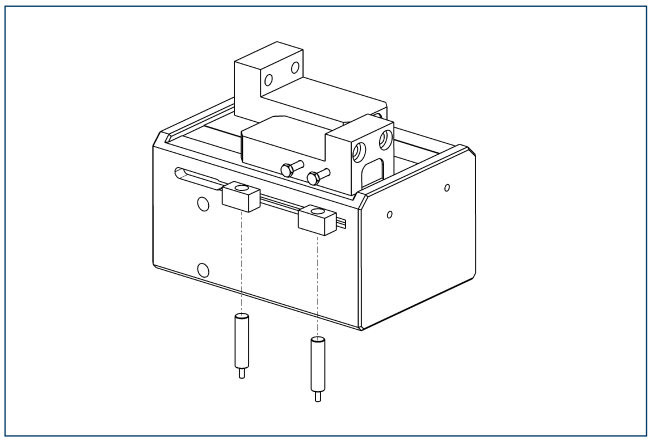

Directly mounted limit position monitor.

Description	ID	Often combined
Inductive proximity switches		
IN 80-S-M12	0301578	
IN 80-S-M8	0301478	●
INK 80-S	0301550	
Cable extensions		
KV BG12-SG12 3P-0030-PNP	0301999	
KV BG12-SG12 3P-0060-PNP	0301998	
KV BW08-SG08 3P-0030-PNP	0301495	
KV BW08-SG08 3P-0100-PNP	0301496	
KV BW08-SG08 3P-0200-PNP	0301497	●
KV BW12-SG12 3P-0030-PNP	0301595	
KV BW12-SG12 3P-0100-PNP	0301596	
KV BW12-SG12 3P-0200-PNP	0301597	
Clip for plug / socket		
CLI-M12	0301464	
CLI-M8	0301463	
Connection cables		
KA BG08-L 3P-0300-PNP	0301622	●
KA BG08-L 3P-0500-PNP	0301623	
KA BG12-L 3P-0500-PNP	30016369	
KA BW08-L 3P-0300-PNP	0301594	
KA BW08-L 3P-0500-PNP	0301502	
KA BW12-L 3P-0300-PNP	0301503	
KA BW12-L 3P-0500-PNP	0301507	
Sensor distributor		
V2-M8	0301775	●
V2-M12	0301776	●
V4-M12	0301747	
V4-M8	0301746	
V8-M12	0301752	
V8-M8	0301751	

ⓘ Two sensors (closer/S) are required for each unit, plus extension cables as an option. Please note the minimum permitted bending radii for the sensor cables, which are generally 35 mm.

MMS electronic magnetic switches

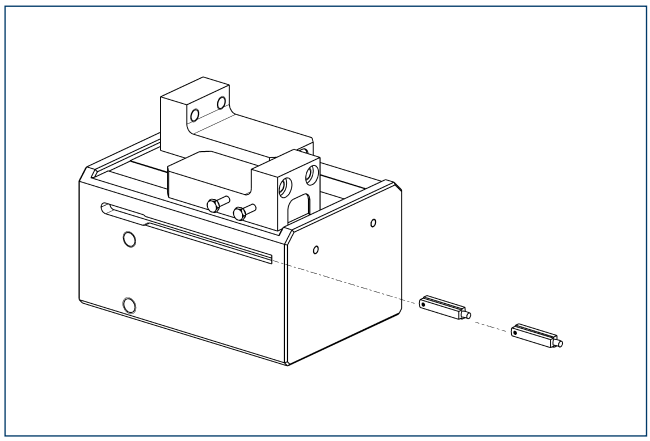

End position monitoring for mounting in the T-slot.

Description	ID	Often combined
MMS electronic magnetic switches		
MMS 30-S-M12-PNP	0301571	
MMS 30-S-M8-PNP	0301471	●
MMSK 30-S-PNP	0301563	
Cable extensions		
KV BG12-SG12 3P-0030-PNP	0301999	
KV BG12-SG12 3P-0060-PNP	0301998	
KV BW08-SG08 3P-0030-PNP	0301495	
KV BW08-SG08 3P-0100-PNP	0301496	
KV BW08-SG08 3P-0200-PNP	0301497	●
KV BW12-SG12 3P-0030-PNP	0301595	
KV BW12-SG12 3P-0100-PNP	0301596	
KV BW12-SG12 3P-0200-PNP	0301597	
Clip for plug / socket		
CLI-M12	0301464	
CLI-M8	0301463	
Connection cables		
KA BG08-L 3P-0300-PNP	0301622	●
KA BG08-L 3P-0500-PNP	0301623	
KA BG12-L 3P-0500-PNP	30016369	
KA BW08-L 3P-0300-PNP	0301594	
KA BW08-L 3P-0500-PNP	0301502	
Sensor distributor		
V2-M8	0301775	●
V4-M8	0301746	
V8-M8	0301751	

ⓘ Two sensors (closer/S) are required for each unit, plus extension cables as an option. Please note the minimum permitted bending radii for the sensor cables, which are generally 35 mm.

PFH-mini 50

SCHUNK Grippers pneumatic | 2-Finger Parallel Grippers | Long-stroke Gripper

Gripping force, O.D. gripping

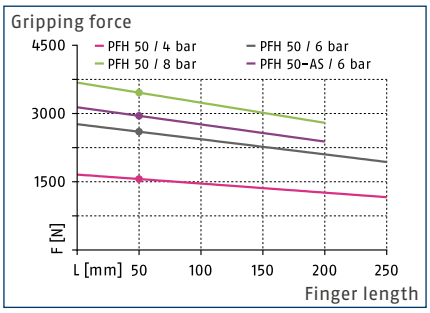

Gripping force, I.D. gripping

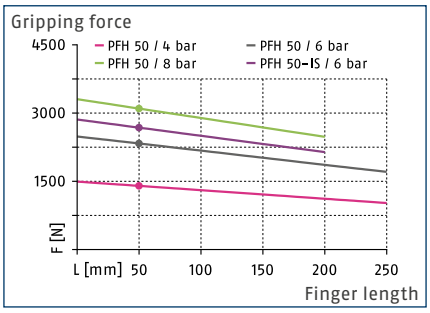

Finger load

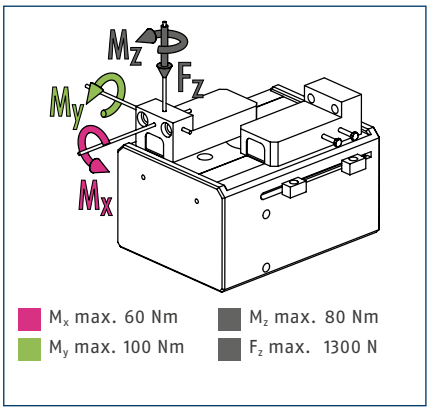

ⓘ The indicated moments and forces are static values, apply per base jaw and may occur simultaneously. M_y may arise in addition to the moment generated by the gripping force itself. If the max. permitted finger weight is exceeded, it is impreative to throttle the air supply so that the jaw movement occurs without any hitting or bouncing. Service life may be reduced.

Technical data

Description		PFH 50	PFH 50-100	PFH 50-AS	PFH 50-IS
ID		0302050	0302053	0302051	0302052
Stroke per jaw	[mm]	50	100	50	50
Closing- / opening force	[N]	2600/2330	2600/2330	2950/-	-/2680
min. spring force	[N]			350	350
Weight	[kg]	9.6	12.6	9.7	9.7
Recommended workpiece weight	[kg]	13	13	13	11.65
Fluid consumption per double stroke	[cm³]	603	1205	603	603
min. / max. operating pressure	[bar]	2/8	2/8	5/6.5	5/6.5
Nominal operating pressure	[bar]	6	6	6	6
Closing- / opening time	[s]	0.6/0.7	1/1.2	0.5/0.8	0.7/0.6
Closing- / opening time only with spring	[s]			0.80	0.80
max. permitted finger length	[mm]	250	250	200	200
max. permitted weight per finger	[kg]	4	4	4	4
IP class		41	41	41	41
min. / max. ambient temperature	[°C]	5/90	5/90	5/90	5/90
Repeat accuracy	[mm]	0.05	0.05	0.05	0.05

ⓘ Requirements on the levelness of the bolting surface (in relation to the entire bolting surface for the gripper):
- < 0.02 mm with an edge length of up to 100 mm
- < 0.05 mm with an edge length of 100 mm or longer

Main view

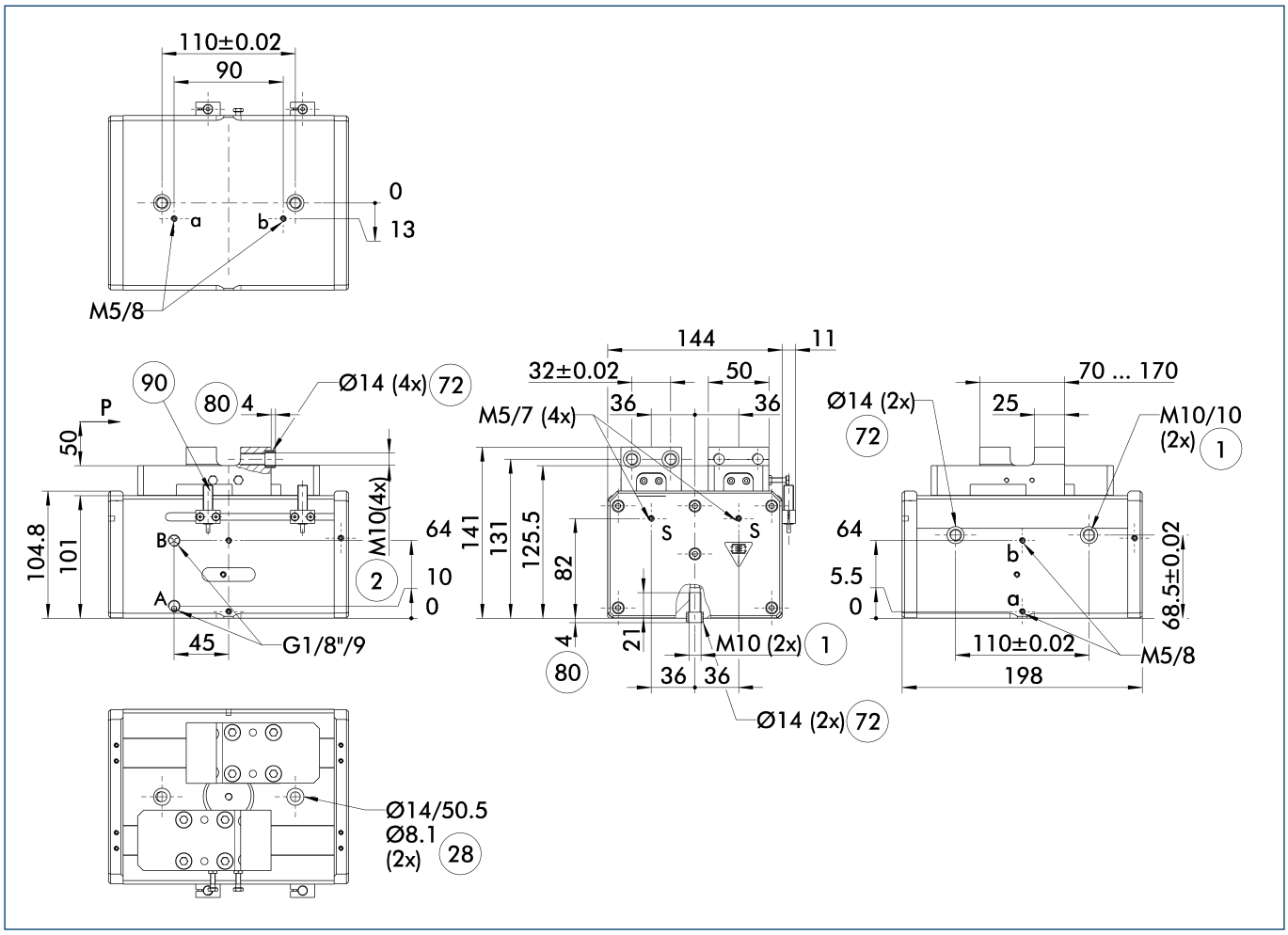

The drawing shows the gripper in the basic version with closed jaws, without dimensional consideration of the options described below.

ⓘ The SDV-P pressure maintenance valve can also be used for I.D. or O.D. gripping alternatively or in addition to the spring-loaded, mechanical gripping force maintenance device (see catalog section on "Accessories").

A, a Main / direct connection, gripper opening

B, b Main / direct connection, gripper closing

S Air purge connection (0.5 ... 1 bar)

(1) Gripper connection

(2) Finger connection

(28) Through-bore

(72) Fit for centering sleeves

(80) Depth of the centering sleeve hole in the mating part

(90) IN ... sensor

Maximum permitted finger projection

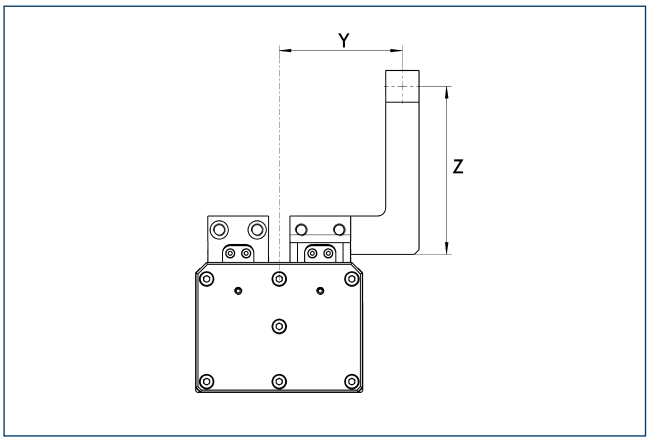

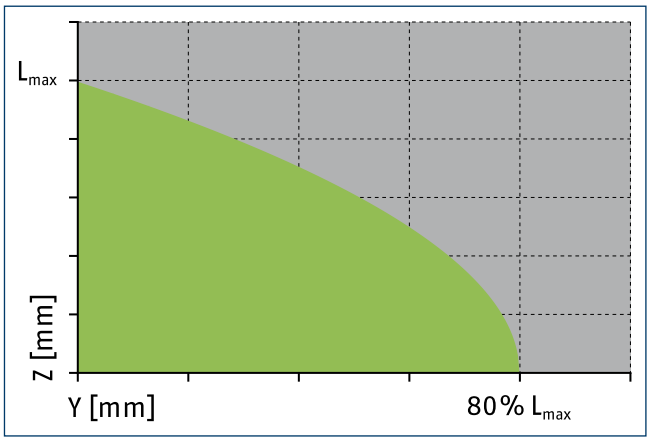

Permitted range

Inadmissible range

L_{max} is equivalent to the maximum permitted finger length, see the chart of technical specifications.

Hose-free direct connection M5

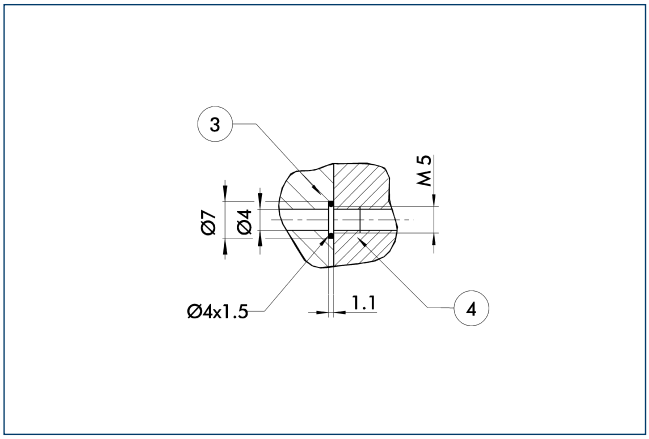

(3) Adapter

(4) Gripper

The direct connection is used for supplying compressed air without hoses. Instead, the pressure medium is fed through bore-holes in the mounting plate.

Stroke versions

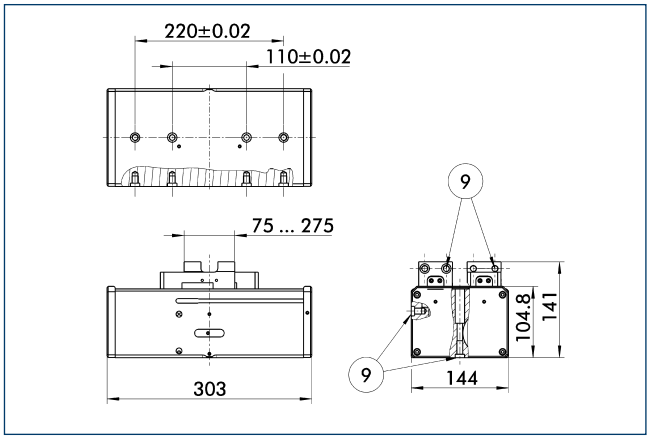

(9) For mounting screw connection diagram, see basic version

The drawing shows changes in dimensions of the versions with a differing stroke compared to the main view of the shown version.

Intermediate jaw interface

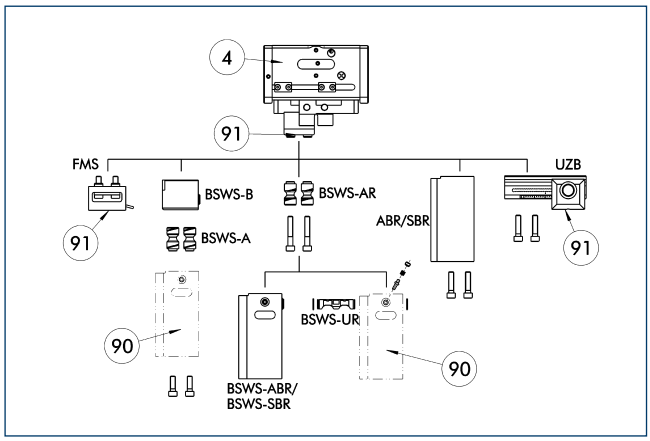

(4) Gripper
(90) Customized gripper fingers
(91) Uniform screw connection pattern

By using the intermediate jaw, you have the possibility of directly connecting a wide range of accessories directly. This includes force measuring jaws, jaw quick-change systems, finger blanks, and universal intermediate jaws.

SDV-P pressure maintenance valve

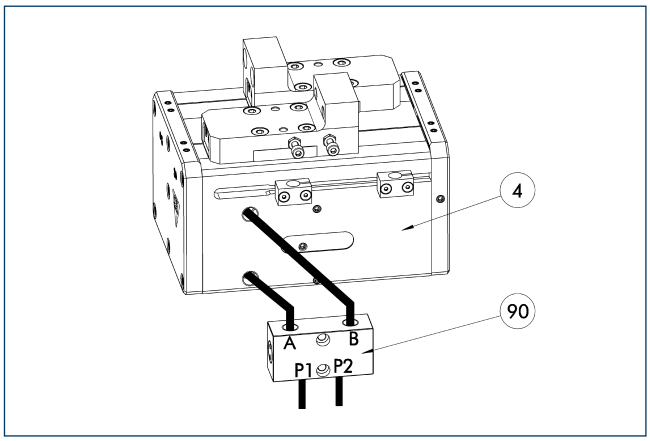

(4) Gripper
(90) SDV-P pressure maintenance valve

The SDV-P pressure maintenance valves ensure that the pressure in the piston chamber of pneumatic gripping, rotary, linear, and quick-change modules is maintained temporarily during an emergency stop.

Description	ID	
Pressure maintenance valve		
SDV-P 04	0403130	

ZBA PFH 50 intermediate jaws

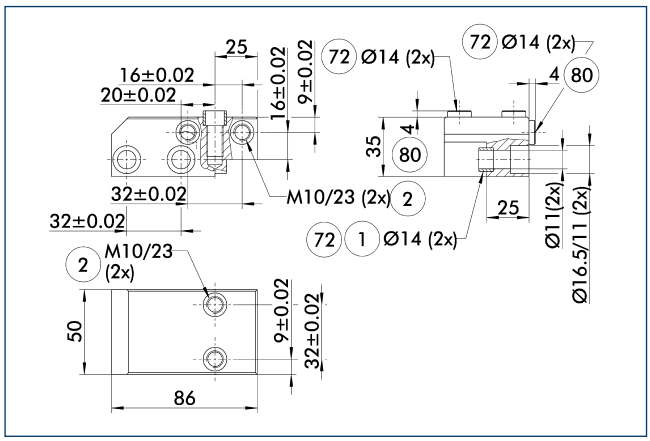

(1) Gripper connection
(2) Finger connection
(72) Fit for centering sleeves
(80) Depth of the centering sleeve hole in the mating part

Optionally intermediate jaws can be used, enabling direct connection and alignment of top jaws and various standard accessories in Z-direction.

Description	ID	Material	Scope of delivery
Intermediate jaws			
ZBA-PFH 50	0300222	Aluminum	2

Inductive proximity switches

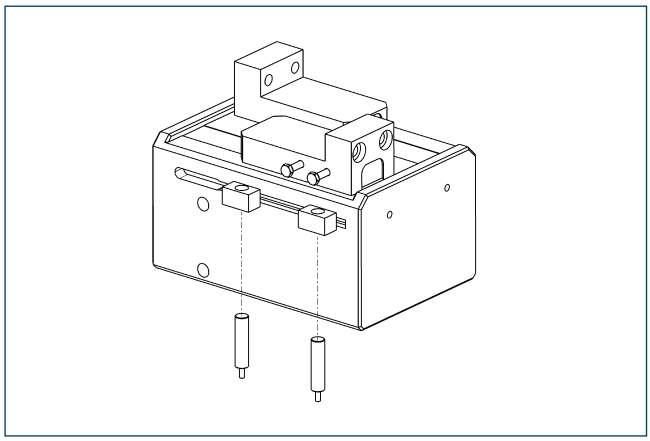

Directly mounted limit position monitor.

Description	ID	Often combined
Inductive proximity switches		
IN 80-S-M12	0301578	
IN 80-S-M8	0301478	●
INK 80-S	0301550	
Cable extensions		
KV BG12-SG12 3P-0030-PNP	0301999	
KV BG12-SG12 3P-0060-PNP	0301998	
KV BW08-SG08 3P-0030-PNP	0301495	
KV BW08-SG08 3P-0100-PNP	0301496	
KV BW08-SG08 3P-0200-PNP	0301497	●
KV BW12-SG12 3P-0030-PNP	0301595	
KV BW12-SG12 3P-0100-PNP	0301596	
KV BW12-SG12 3P-0200-PNP	0301597	
Clip for plug / socket		
CLI-M12	0301464	
CLI-M8	0301463	
Connection cables		
KA BG08-L 3P-0300-PNP	0301622	●
KA BG08-L 3P-0500-PNP	0301623	
KA BG12-L 3P-0500-PNP	30016369	
KA BW08-L 3P-0300-PNP	0301594	
KA BW08-L 3P-0500-PNP	0301502	
KA BW12-L 3P-0300-PNP	0301503	
KA BW12-L 3P-0500-PNP	0301507	
Sensor distributor		
V2-M8	0301775	●
V2-M12	0301776	●
V4-M12	0301747	
V4-M8	0301746	
V8-M12	0301752	
V8-M8	0301751	

ⓘ Two sensors (closer/S) are required for each unit, plus extension cables as an option. Please note the minimum permitted bending radii for the sensor cables, which are generally 35 mm.

MMS electronic magnetic switches

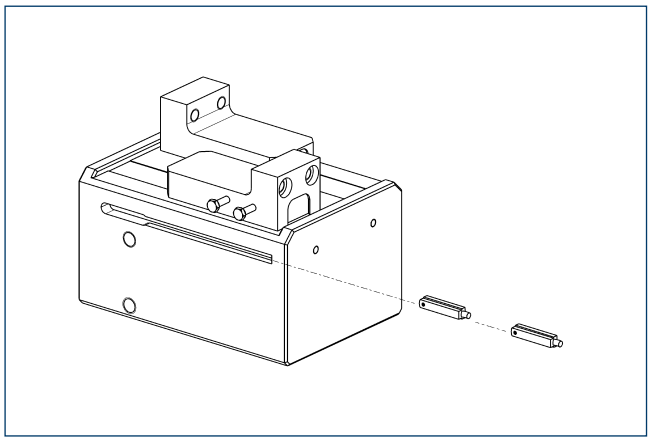

End position monitoring for mounting in the T-slot.

Description	ID	Often combined
MMS electronic magnetic switches		
MMS 30-S-M12-PNP	0301571	
MMS 30-S-M8-PNP	0301471	●
MMSK 30-S-PNP	0301563	
Cable extensions		
KV BG12-SG12 3P-0030-PNP	0301999	
KV BG12-SG12 3P-0060-PNP	0301998	
KV BW08-SG08 3P-0030-PNP	0301495	
KV BW08-SG08 3P-0100-PNP	0301496	
KV BW08-SG08 3P-0200-PNP	0301497	●
KV BW12-SG12 3P-0030-PNP	0301595	
KV BW12-SG12 3P-0100-PNP	0301596	
KV BW12-SG12 3P-0200-PNP	0301597	
Clip for plug / socket		
CLI-M12	0301464	
CLI-M8	0301463	
Connection cables		
KA BG08-L 3P-0300-PNP	0301622	●
KA BG08-L 3P-0500-PNP	0301623	
KA BG12-L 3P-0500-PNP	30016369	
KA BW08-L 3P-0300-PNP	0301594	
KA BW08-L 3P-0500-PNP	0301502	
Sensor distributor		
V2-M8	0301775	●
V4-M8	0301746	
V8-M8	0301751	

ⓘ Two sensors (closer/S) are required for each unit, plus extension cables as an option. Please note the minimum permitted bending radii for the sensor cables, which are generally 35 mm.

Loadable. Flexible. Reliable.

PFH Long-stroke Gripper

Gripper with long jaw stroke for large parts and / or a broad range of parts

Field of Application

Clean to slightly dirty working environments, especially suitable for the handling of car rims

Advantages – Your benefit

Solid guides for the precise handling of different kinds of workpieces

High maximum moments possible suitable for using long gripper fingers

Double piston rack and pinion principle for centric clamping

Mounting from two sides in three screw directions for universal and flexible gripper assembly

Air supply via hose-free direct connection or screw connections for flexible pressure supply in all automated systems

Sizes	Weight	Gripping force	Stroke per jaw	Workpiece weight
Quantity: 4	18.9 .. 33.6 kg	2200 N	150 .. 300 mm	11.2 .. 14.7 kg

Functional Description

The base jaws form the piston chambers while the pistons themselves remain stationary.

By pressure actuating opposing piston area, the base jaws set in motion.
The end of the stroke is dampened with an elastomer pad.

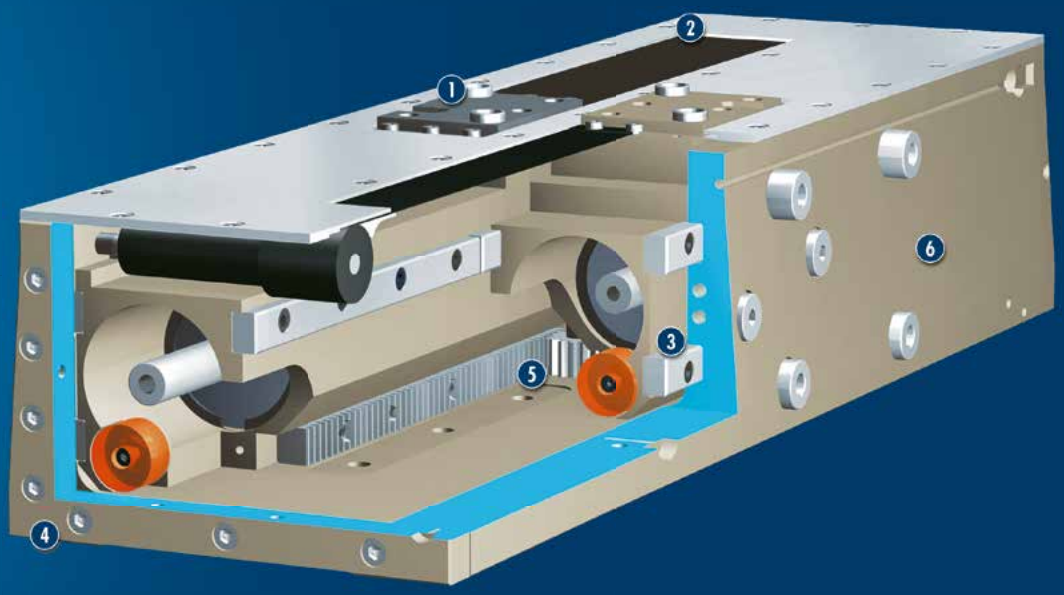

① **Base jaw**
for the connection of workpiece-specific gripper fingers

② **Dust cover**
along the whole guidance length against coarse dirt

③ **Sliding guide**
for precise gripping with minimal play at a high load capacity

④ **Centering and mounting possibilities**
for universal assembly of the gripper

⑤ **Kinematics**
Double piston rack and pinion principle for centric clamping

⑥ **Housing**
Sturdy, one-piece U-section

CAD data, operating manuals and other current product documents are available at **www.schunk.com**

General Notes about the Series

Operating principle: Double piston rack and pinion principle

Housing material: Aluminum alloy, anodized

Base jaw material: Steel

Actuation: pneumatic, with filtered compressed air as per DIN ISO 8573-1: 7 4 4

Warranty: 24 months (details, general terms and conditions and operating manuals can be downloaded at www.schunk.com)

Scope of delivery: Mount for proximity switch, centering sleeves, O-rings for direct connection, assembly and operating manual with declaration of incorporation.

Gripping force maintenance device: possible with SDV-P pressure maintenance valve

Gripping force: is the arithmetic total of the gripping force applied to each gripper jaw at distance P (see illustration).

Finger length: is measured from the upper edge of the gripper housing in the direction of the main axis. The breach of the max. permitted finger length can bring higher abrasion. The maximum permissible finger length applies up to the nominal operating pressure. With higher pressures, the finger length must be reduced proportionally to the nominal operating pressure.

Repeat accuracy: is defined as the spread of the limit position after 100 consecutive strokes.

Workpiece weight: is calculated for a force-fit connection with a coefficient of friction of 0.1 and a safety factor of 2 against slippage of the workpiece on acceleration due to gravity g. Considerably heavier workpiece weights are permitted with form-fit gripping.

Closing and opening times: are purely the times that the base jaws or fingers are in motion. Valve switching times, hose filling times or PLC reaction times are not included in the above times and must be taken into consideration when determining cycle times.

Application example

Gripper unit for handling car and truck rims. Special fingers enable process reliable gripping of pre-machined and finished parts.

1. PFH 2-Finger Long-stroke Gripper
2. Top fingers for wheel rim handling
3. Workpiece: 19 inch wheel rim

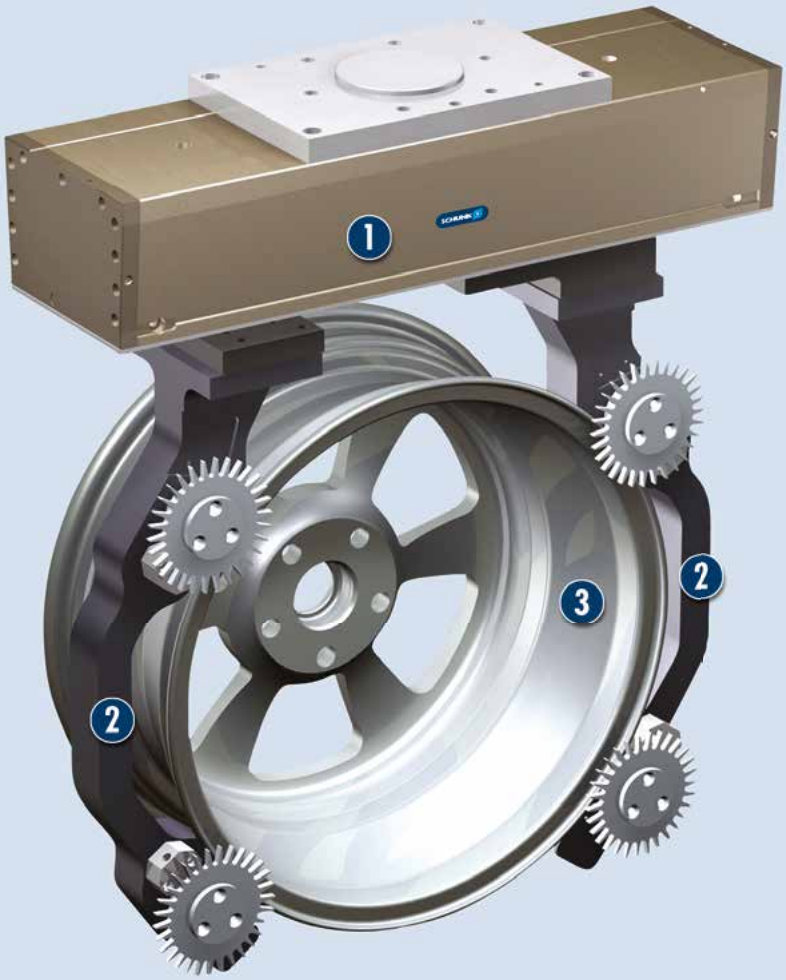

SCHUNK offers more ...

The following components make the product PFH even more productive – the suitable addition for the highest functionality, flexibility, reliability, and controlled production.

Centering Sleeves

Fittings

Magnetic Switches

Inductive Proximity Switches

Sensor Distributor

Gripper Pads

Sensor Cables

Plastic Inserts

SDV-P Pressure Maintenance Valve

ⓘ Further information regarding the products can be found on the following products pages or at www.schunk.com. Please contact us for further information: SCHUNK technical hotline +49-7133-103-2696

Options and special Information

The gripper was specially developed for handling car rims. It is capable of gripping rims from 13" to 21", but can also be used for handling other large workpieces. Units with manual stroke adjustment and versions with shorter and longer strokes are available on request.

PFH 150

SCHUNK Grippers pneumatic | 2-Finger Parallel Grippers | Long-stroke Gripper

Gripping force

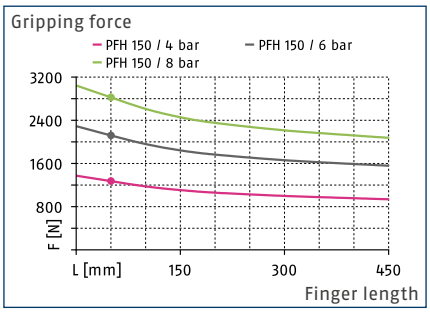

Finger load

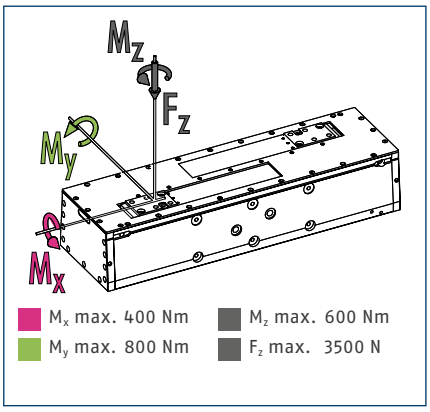

ⓘ The indicated moments and forces are static values, apply per base jaw and may occur simultaneously. M_y may arise in addition to the moment generated by the gripping force itself. If the max. permitted finger weight is exceeded, it is impreative to throttle the air supply so that the jaw movement occurs without any hitting or bouncing. Service life may be reduced.

Technical data

Description		PFH 150
ID		0302000
Stroke per jaw	[mm]	150
Closing- / opening force	[N]	2200/2200
Weight	[kg]	18.9
Recommended workpiece weight	[kg]	11.2
Fluid consumption per double stroke	[cm³]	1510
min. / max. operating pressure	[bar]	2/8
Nominal operating pressure	[bar]	6
Closing- / opening time	[s]	0.7/0.7
max. permitted finger length	[mm]	450
max. permitted weight per finger	[kg]	7
IP class		30
min. / max. ambient temperature	[°C]	5/90
Repeat accuracy	[mm]	0.02

ⓘ Requirements on the levelness of the bolting surface (in relation to the entire bolting surface for the gripper):
- < 0.02 mm with an edge length of up to 100 mm
- < 0.05 mm with an edge length of 100 mm or longer

Main view

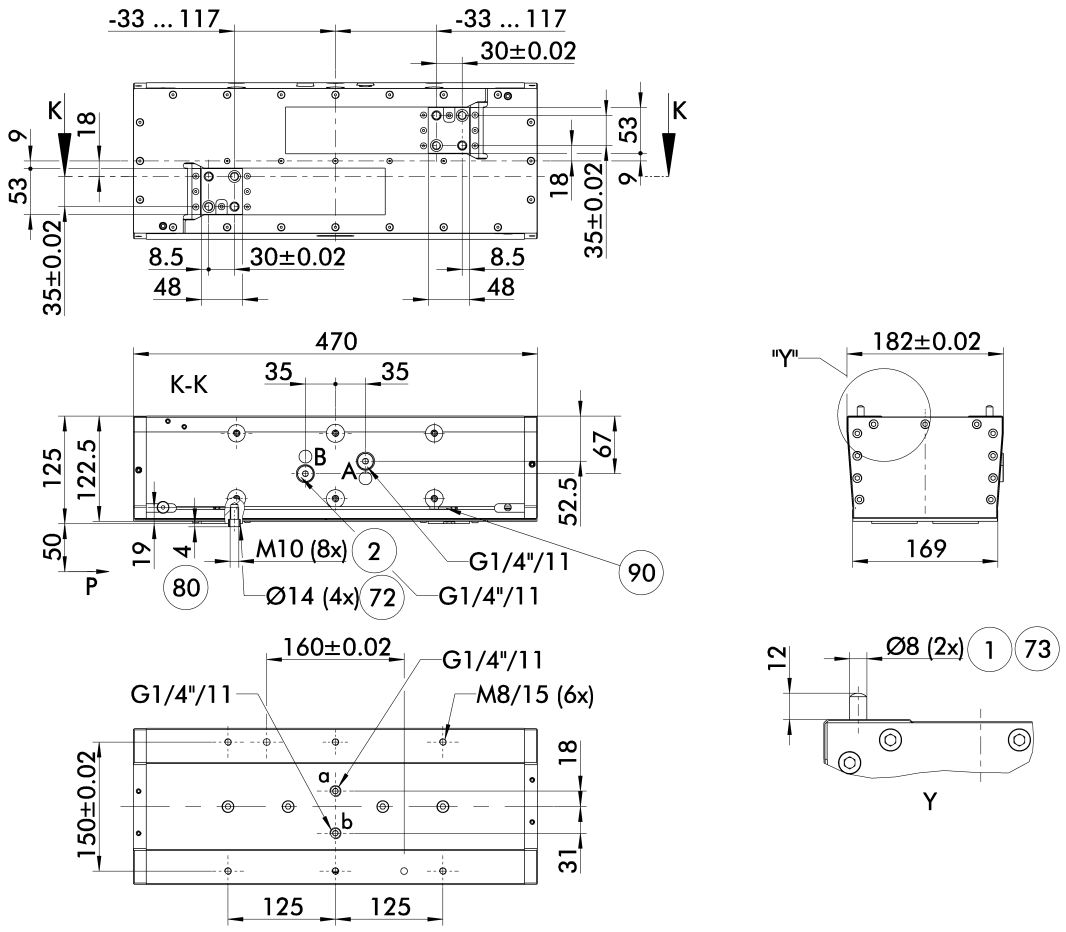

The drawing shows the basic version of the gripper with open jaws, without dimensional consideration of the options described below.

ⓘ The SDV-P pressure maintenance valve can also be used for I.D. or O.D. gripping alternatively or in addition to the spring-loaded, mechanical gripping force maintenance device (see catalog section on "Accessories").

A, a Main / direct connection, gripper opening

B, b Main / direct connection, gripper closing

(1) Gripper connection

(2) Finger connection

(72) Fit for centering sleeves

(73) Fit for centering pins

(80) Depth of the centering sleeve hole in the mating part

(90) MMS 22... sensor

Maximum permitted finger projection

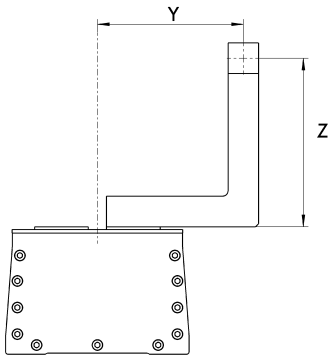

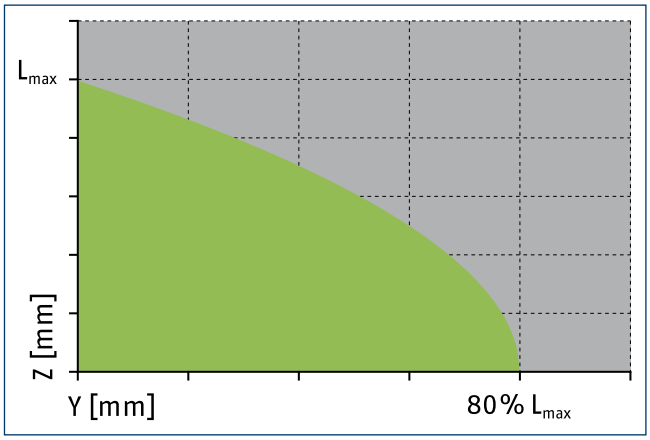

Permitted range

Inadmissible range

L_{max} is equivalent to the maximum permitted finger length, see the chart of technical specifications.

Hose-free direct connection

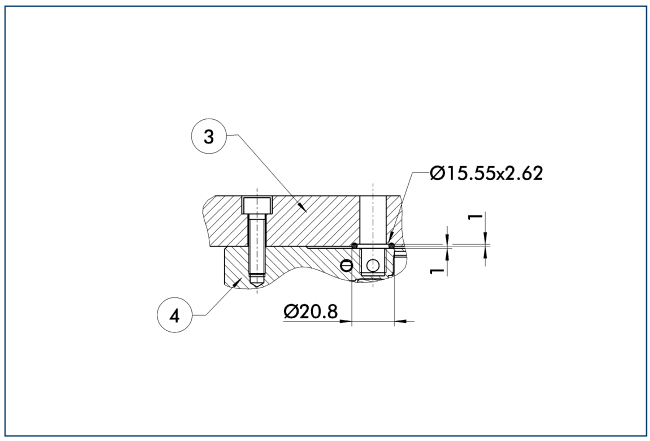

(3) Adapter (4) Gripper

The direct connection is used for supplying compressed air without hoses. Instead, the pressure medium is fed through bore-holes in the mounting plate.

Mounting kit for side mount

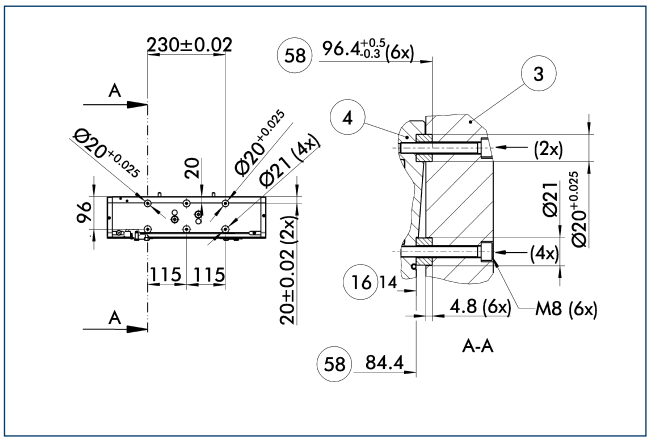

(3) Adapter (16) Max. depth of engagement
(4) Gripper (58) Distance from center of gripper

The mounting kit for side mount enables parallel and centric fastening at the side surface.

Description	ID	
Mounting kit for side mount		
AS-S PFH 150-200	0302024	

SDV-P pressure maintenance valve

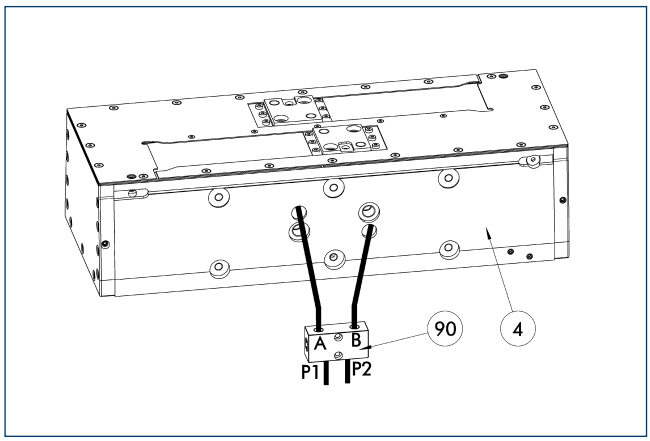

(4) Gripper (90) SDV-P pressure maintenance valve

The SDV-P pressure maintenance valves ensure that the pressure in the piston chamber of pneumatic gripping, rotary, linear, and quick-change modules is maintained temporarily during an emergency stop.

Description	ID	
Pressure maintenance valve		
SDV-P 10	0300108	

Mounting kit for proximity switch

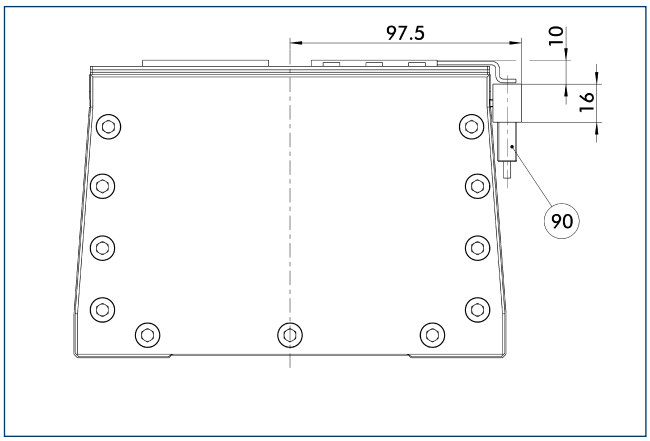

(90) IN ... sensor

The mounting kit enables assembly of two inductive proximity switches. The kit is fitted in the sensor slot of the slotted switch.

Description	ID	
Mounting kit for proximity switch		
HG-PFH 150-300	0300770	

ⓘ This mounting kit needs to be ordered optionally as an accessory.

Inductive proximity switches

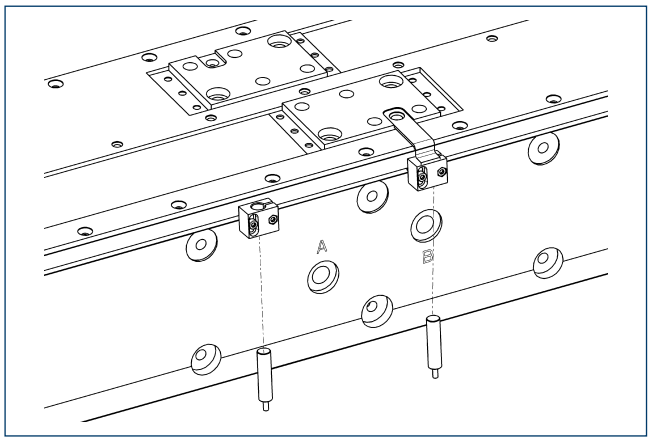

Limit position monitor can be mounted with mounting kit.

Description	ID	Often combined
Mounting kit for proximity switch		
HG-PFH 150-300	0300770	
Inductive proximity switches		
IN 80-S-M12	0301578	
IN 80-S-M8	0301478	●
INK 80-S	0301550	
Cable extensions		
KV BG12-SG12 3P-0030-PNP	0301999	
KV BG12-SG12 3P-0060-PNP	0301998	
KV BW08-SG08 3P-0030-PNP	0301495	
KV BW08-SG08 3P-0100-PNP	0301496	
KV BW08-SG08 3P-0200-PNP	0301497	●
KV BW12-SG12 3P-0030-PNP	0301595	
KV BW12-SG12 3P-0100-PNP	0301596	
KV BW12-SG12 3P-0200-PNP	0301597	
Clip for plug / socket		
CLI-M12	0301464	
CLI-M8	0301463	
Connection cables		
KA BG08-L 3P-0300-PNP	0301622	●
KA BG08-L 3P-0500-PNP	0301623	
KA BG12-L 3P-0500-PNP	30016369	
KA BW08-L 3P-0300-PNP	0301594	
KA BW08-L 3P-0500-PNP	0301502	
KA BW12-L 3P-0300-PNP	0301503	
KA BW12-L 3P-0500-PNP	0301507	
Sensor distributor		
V2-M8	0301775	●
V2-M12	0301776	●
V4-M12	0301747	
V4-M8	0301746	
V8-M12	0301752	
V8-M8	0301751	

ⓘ Two sensors (closer/S) are required for each unit, plus extension cables as an option. This mounting kit needs to be ordered optionally as an accessory. Please note the minimum permitted bending radii for the sensor cables, which are generally 35 mm.

MMS electronic magnetic switches

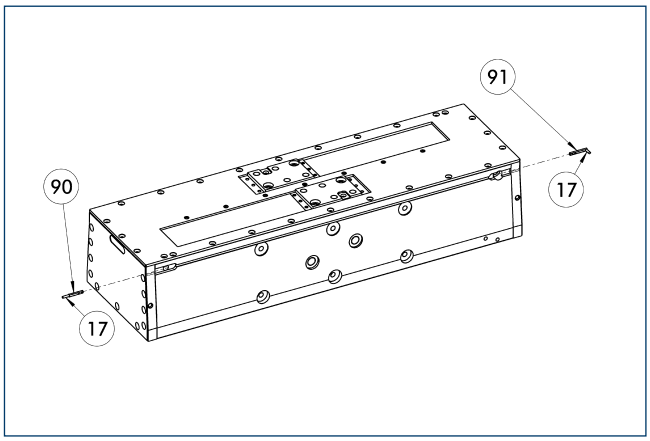

(17) Cable outlet
(91) MMS 22...-SA sensor
(90) MMS 22... sensor

End position monitoring for mounting in the C-slot.

Description	ID	Often combined
MMS electronic magnetic switches		
MMS 22-S-M8-PNP	0301032	●
MMSK 22-S-PNP	0301034	
MMS electronic magnetic switches with lateral cable outlet		
MMS 22-S-M8-PNP-SA	0301042	●
MMSK 22-S-PNP-SA	0301044	
Reed switches		
RMS 22-S-M8	0377720	●
Cable extensions		
KV BW08-SG08 3P-0030-PNP	0301495	
KV BW08-SG08 3P-0100-PNP	0301496	
KV BW08-SG08 3P-0200-PNP	0301497	●
Clip for plug / socket		
CLI-M8	0301463	
Connection cables		
KA BG08-L 3P-0300-PNP	0301622	●
KA BG08-L 3P-0500-PNP	0301623	
KA BW08-L 3P-0300-PNP	0301594	
KA BW08-L 3P-0500-PNP	0301502	
RSS radio sensor system		
RSS-T2	0377710	
Sensor distributor		
V2-M8	0301775	●
V4-M8	0301746	
V8-M8	0301751	

ⓘ Two sensors (closer/S) are required for each unit, plus extension cables as an option. Please note the minimum permitted bending radii for the sensor cables, which are generally 35 mm.

MMS PI1 programmable magnetic switches

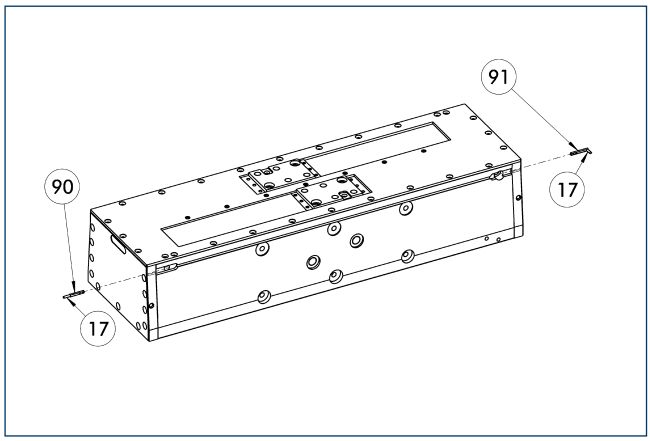

17 Cable outlet
91 MMS 22...-PI1-...-SA sensor
90 MMS 22...-PI1-... sensor

Position query with one programmable position per sensor and electronics integrated in sensor. Programmable via MT magnet teaching tool (included in the scope of delivery) or ST plug teaching tool (optional). Limit position query mounted in C-groove. If the ST plug teaching tools are listed in the table, teaching can only take place with the ST plug teaching tools.

Description	ID	Often combined
MMS PI1 programmable magnetic switches		
MMS 22-PI1-S-M8-PNP	0301160	●
MMSK 22-PI1-S-PNP	0301162	
MMS PI1-HD programmable magnetic switches with stainless steel housing		
MMS 22-PI1-S-M8-PNP-HD	0301110	●
MMSK 22-PI1-S-PNP-HD	0301112	
MMS PI1 programmable magnetic switches with lateral cable outlet		
MMS 22-PI1-S-M8-PNP-SA	0301166	●
MMSK 22-PI1-S-PNP-SA	0301168	

ⓘ Two sensors (closer/S) are required for each unit, plus extension cables as an option. Please note the minimum permitted bending radii for the sensor cables, which are generally 35 mm. Connection cable, cable extensions, and sensor distributors can be found in the table for the MMS 22.

PFH 200

SCHUNK Grippers pneumatic | 2-Finger Parallel Grippers | Long-stroke Gripper

Gripping force

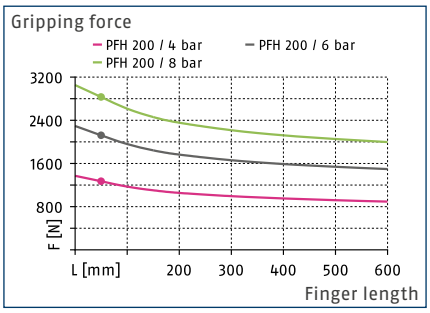

Finger load

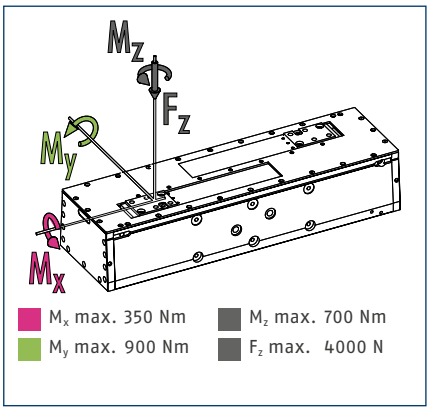

ⓘ The indicated moments and forces are static values, apply per base jaw and may occur simultaneously. M_y may arise in addition to the moment generated by the gripping force itself. If the max. permitted finger weight is exceeded, it is impreative to throttle the air supply so that the jaw movement occurs without any hitting or bouncing. Service life may be reduced.

Technical data

Description		PFH 200
ID		0302020
Stroke per jaw	[mm]	200
Closing- / opening force	[N]	2200/2200
Weight	[kg]	23.5
Recommended workpiece weight	[kg]	11.2
Fluid consumption per double stroke	[cm³]	1990
min. / max. operating pressure	[bar]	2/8
Nominal operating pressure	[bar]	6
Closing- / opening time	[s]	0.9/0.9
max. permitted finger length	[mm]	600
max. permitted weight per finger	[kg]	8
IP class		30
min. / max. ambient temperature	[°C]	5/90
Repeat accuracy	[mm]	0.02

ⓘ Requirements on the levelness of the bolting surface (in relation to the entire bolting surface for the gripper):
- < 0.02 mm with an edge length of up to 100 mm
- < 0.05 mm with an edge length of 100 mm or longer

Main view

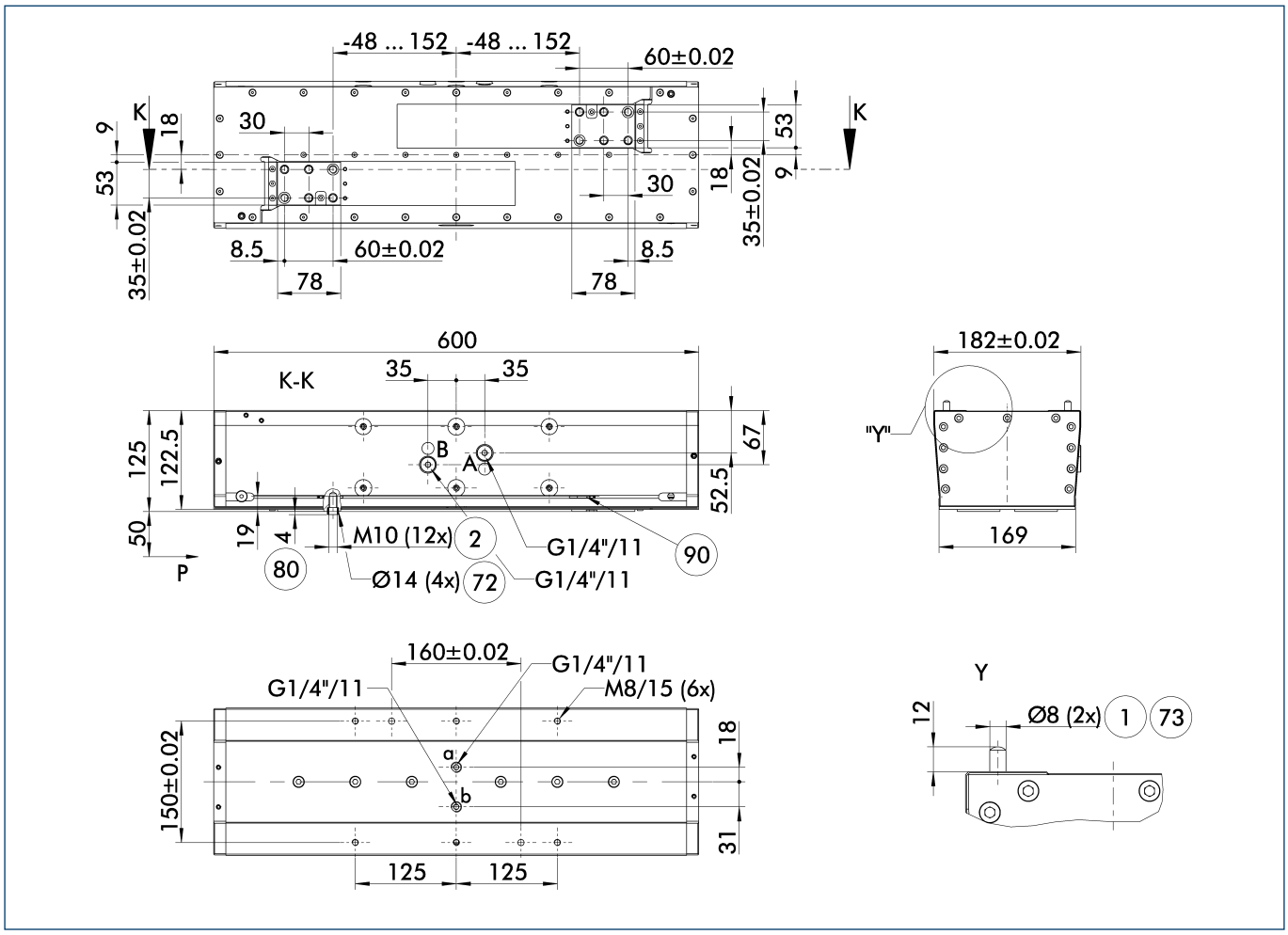

The drawing shows the basic version of the gripper with open jaws, without dimensional consideration of the options described below.

ⓘ The SDV-P pressure maintenance valve can also be used for I.D. or O.D. gripping alternatively or in addition to the spring-loaded, mechanical gripping force maintenance device (see catalog section on "Accessories").

A, a Main / direct connection, gripper opening

B, b Main / direct connection, gripper closing

(1) Gripper connection

(2) Finger connection

(72) Fit for centering sleeves

(73) Fit for centering pins

(80) Depth of the centering sleeve hole in the mating part

(90) MMS 22... sensor

Maximum permitted finger projection

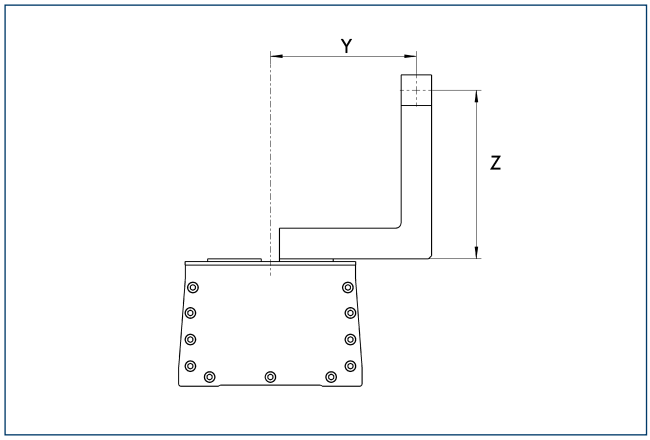

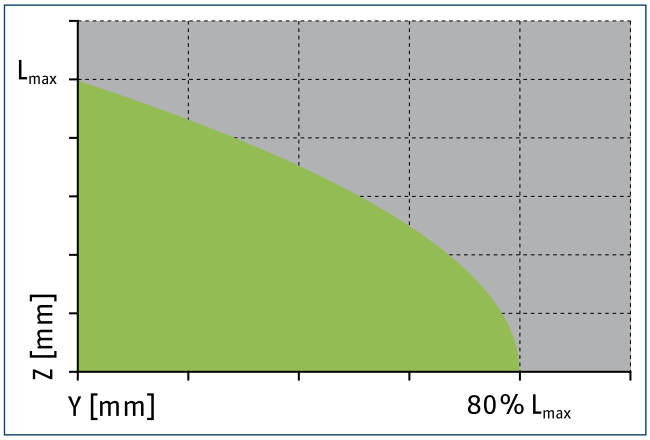

Permitted range

Inadmissible range

L_{max} is equivalent to the maximum permitted finger length, see the chart of technical specifications.

Hose-free direct connection

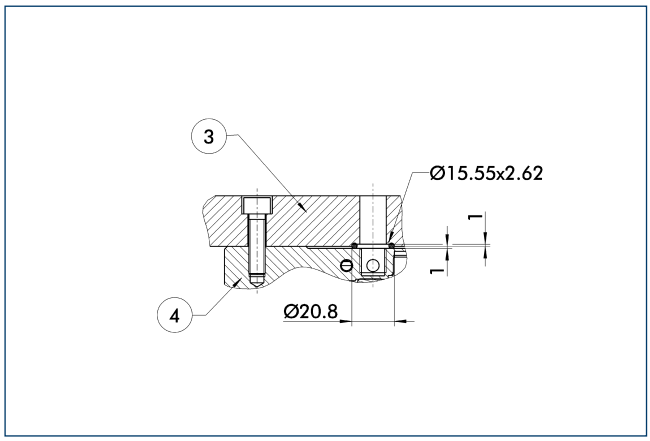

(3) Adapter (4) Gripper

The direct connection is used for supplying compressed air without hoses. Instead, the pressure medium is fed through bore-holes in the mounting plate.

Mounting kit for side mount

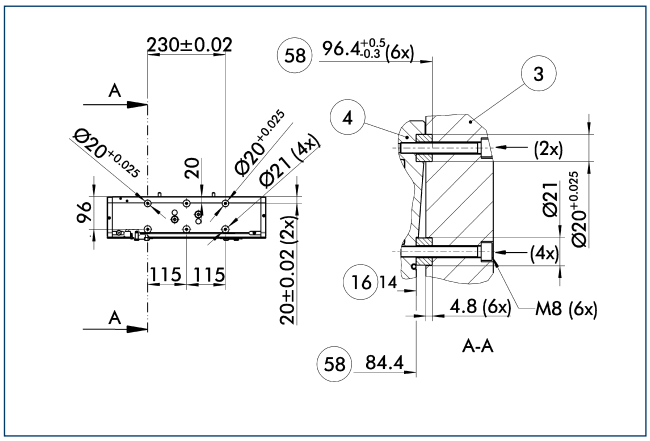

(3) Adapter (16) Max. depth of engagement
(4) Gripper (58) Distance from center of gripper

The mounting kit for side mount enables parallel and centric fastening at the side surface.

Description	ID	
Mounting kit for side mount		
AS-S PFH 150-200	0302024	

SDV-P pressure maintenance valve

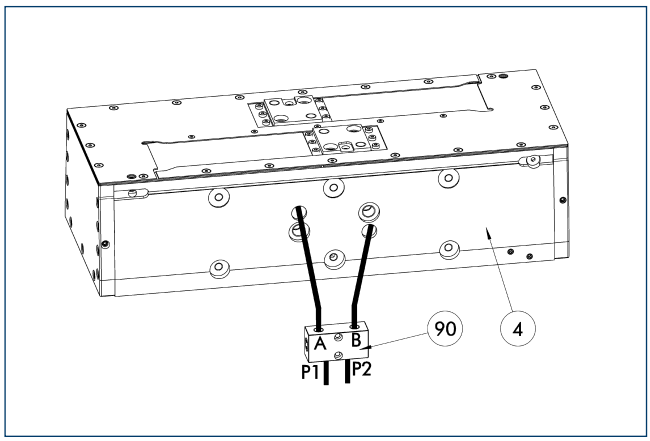

(4) Gripper (90) SDV-P pressure maintenance valve

The SDV-P pressure maintenance valves ensure that the pressure in the piston chamber of pneumatic gripping, rotary, linear, and quick-change modules is maintained temporarily during an emergency stop.

Description	ID	
Pressure maintenance valve		
SDV-P 10	0300108	

Mounting kit for proximity switch

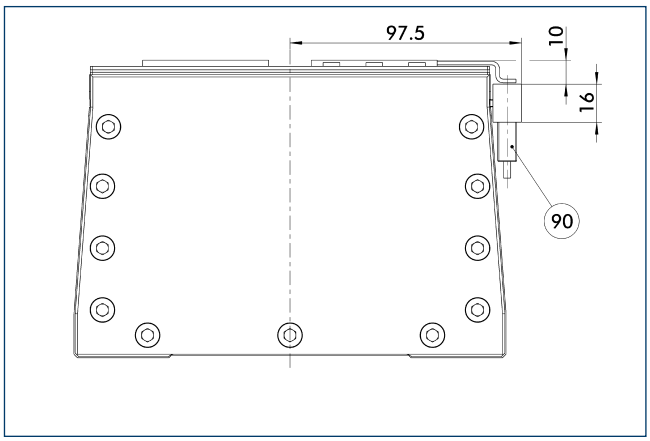

(90) IN ... sensor

The mounting kit enables assembly of two inductive proximity switches. The kit is fitted in the sensor slot of the slotted switch.

Description	ID	
Mounting kit for proximity switch		
HG-PFH 150-300	0300770	

ⓘ This mounting kit needs to be ordered optionally as an accessory.

Inductive proximity switches

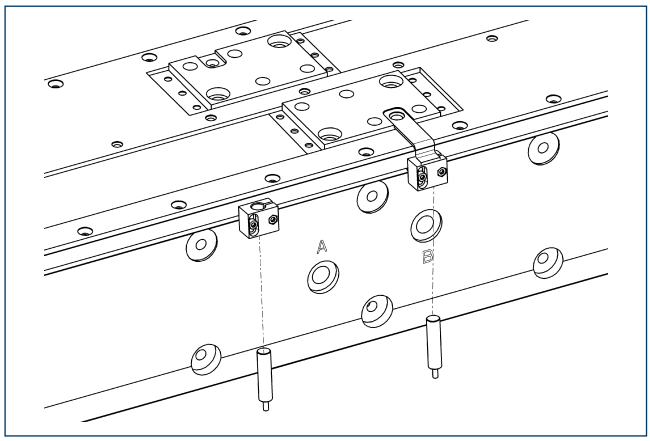

Limit position monitor can be mounted with mounting kit.

Description	ID	Often combined
Mounting kit for proximity switch		
HG-PFH 150-300	0300770	
Inductive proximity switches		
IN 80-S-M12	0301578	
IN 80-S-M8	0301478	●
INK 80-S	0301550	
Cable extensions		
KV BG12-SG12 3P-0030-PNP	0301999	
KV BG12-SG12 3P-0060-PNP	0301998	
KV BW08-SG08 3P-0030-PNP	0301495	
KV BW08-SG08 3P-0100-PNP	0301496	
KV BW08-SG08 3P-0200-PNP	0301497	●
KV BW12-SG12 3P-0030-PNP	0301595	
KV BW12-SG12 3P-0100-PNP	0301596	
KV BW12-SG12 3P-0200-PNP	0301597	
Clip for plug / socket		
CLI-M12	0301464	
CLI-M8	0301463	
Connection cables		
KA BG08-L 3P-0300-PNP	0301622	●
KA BG08-L 3P-0500-PNP	0301623	
KA BG12-L 3P-0500-PNP	30016369	
KA BW08-L 3P-0300-PNP	0301594	
KA BW08-L 3P-0500-PNP	0301502	
KA BW12-L 3P-0300-PNP	0301503	
KA BW12-L 3P-0500-PNP	0301507	
Sensor distributor		
V2-M8	0301775	●
V2-M12	0301776	●
V4-M12	0301747	
V4-M8	0301746	
V8-M12	0301752	
V8-M8	0301751	

ⓘ Two sensors (closer/S) are required for each unit, plus extension cables as an option. This mounting kit needs to be ordered optionally as an accessory. Please note the minimum permitted bending radii for the sensor cables, which are generally 35 mm.

MMS electronic magnetic switches

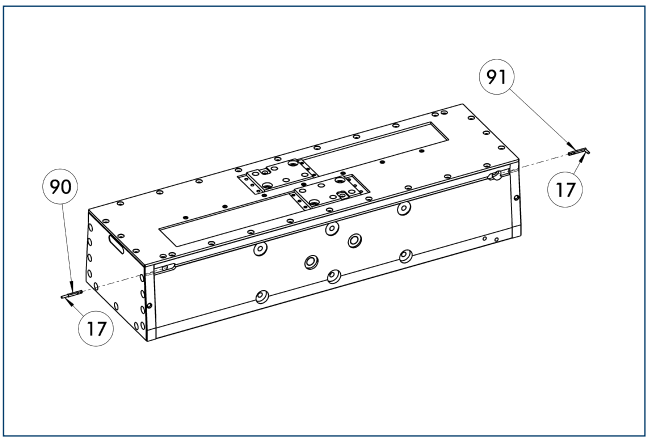

(17) Cable outlet
(91) MMS 22...-SA sensor
(90) MMS 22... sensor

End position monitoring for mounting in the C-slot.

Description	ID	Often combined
MMS electronic magnetic switches		
MMS 22-S-M8-PNP	0301032	●
MMSK 22-S-PNP	0301034	
MMS electronic magnetic switches with lateral cable outlet		
MMS 22-S-M8-PNP-SA	0301042	●
MMSK 22-S-PNP-SA	0301044	
Reed switches		
RMS 22-S-M8	0377720	●
Cable extensions		
KV BW08-SG08 3P-0030-PNP	0301495	
KV BW08-SG08 3P-0100-PNP	0301496	
KV BW08-SG08 3P-0200-PNP	0301497	●
Clip for plug / socket		
CLI-M8	0301463	
Connection cables		
KA BG08-L 3P-0300-PNP	0301622	●
KA BG08-L 3P-0500-PNP	0301623	
KA BW08-L 3P-0300-PNP	0301594	
KA BW08-L 3P-0500-PNP	0301502	
RSS radio sensor system		
RSS-T2	0377710	
Sensor distributor		
V2-M8	0301775	●
V4-M8	0301746	
V8-M8	0301751	

ⓘ Two sensors (closer/S) are required for each unit, plus extension cables as an option. Please note the minimum permitted bending radii for the sensor cables, which are generally 35 mm.

MMS PI1 programmable magnetic switches

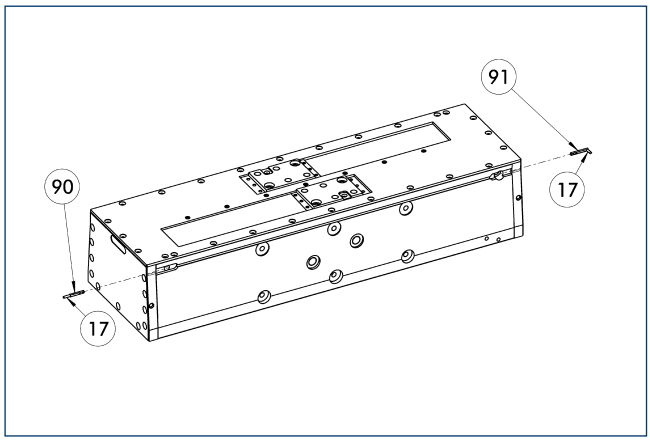

17 Cable outlet
91 MMS 22...-PI1-...-SA sensor
90 MMS 22...-PI1-... sensor

Position query with one programmable position per sensor and electronics integrated in sensor. Programmable via MT magnet teaching tool (included in the scope of delivery) or ST plug teaching tool (optional). Limit position query mounted in C-groove. If the ST plug teaching tools are listed in the table, teaching can only take place with the ST plug teaching tools.

Description	ID	Often combined
MMS PI1 programmable magnetic switches		
MMS 22-PI1-S-M8-PNP	0301160	●
MMSK 22-PI1-S-PNP	0301162	
MMS PI1-HD programmable magnetic switches with stainless steel housing		
MMS 22-PI1-S-M8-PNP-HD	0301110	●
MMSK 22-PI1-S-PNP-HD	0301112	
MMS PI1 programmable magnetic switches with lateral cable outlet		
MMS 22-PI1-S-M8-PNP-SA	0301166	●
MMSK 22-PI1-S-PNP-SA	0301168	

ⓘ Two sensors (closer/S) are required for each unit, plus extension cables as an option. Please note the minimum permitted bending radii for the sensor cables, which are generally 35 mm. Connection cable, cable extensions, and sensor distributors can be found in the table for the MMS 22.

PFH 250

SCHUNK Grippers pneumatic | 2-Finger Parallel Grippers | Long-stroke Gripper

Gripping force

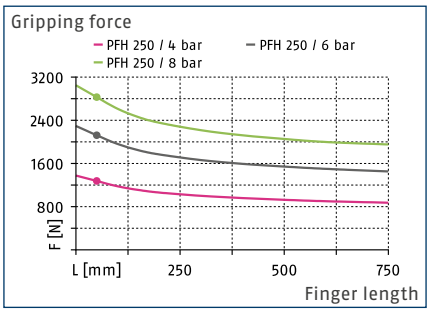

Finger load

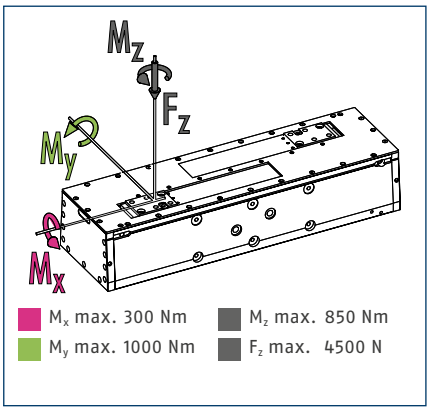

ⓘ The indicated moments and forces are static values, apply per base jaw and may occur simultaneously. M_y may arise in addition to the moment generated by the gripping force itself. If the max. permitted finger weight is exceeded, it is impreative to throttle the air supply so that the jaw movement occurs without any hitting or bouncing. Service life may be reduced.

Technical data

Description		PFH 250
ID		0302005
Stroke per jaw	[mm]	250
Closing- / opening force	[N]	2200/2200
Weight	[kg]	28.6
Recommended workpiece weight	[kg]	11.2
Fluid consumption per double stroke	[cm³]	2510
min. / max. operating pressure	[bar]	2/8
Nominal operating pressure	[bar]	6
Closing- / opening time	[s]	1.1/1.1
max. permitted finger length	[mm]	750
max. permitted weight per finger	[kg]	9
IP class		30
min. / max. ambient temperature	[°C]	5/90
Repeat accuracy	[mm]	0.02

ⓘ Requirements on the levelness of the bolting surface (in relation to the entire bolting surface for the gripper):
- < 0.02 mm with an edge length of up to 100 mm
- < 0.05 mm with an edge length of 100 mm or longer

Main view

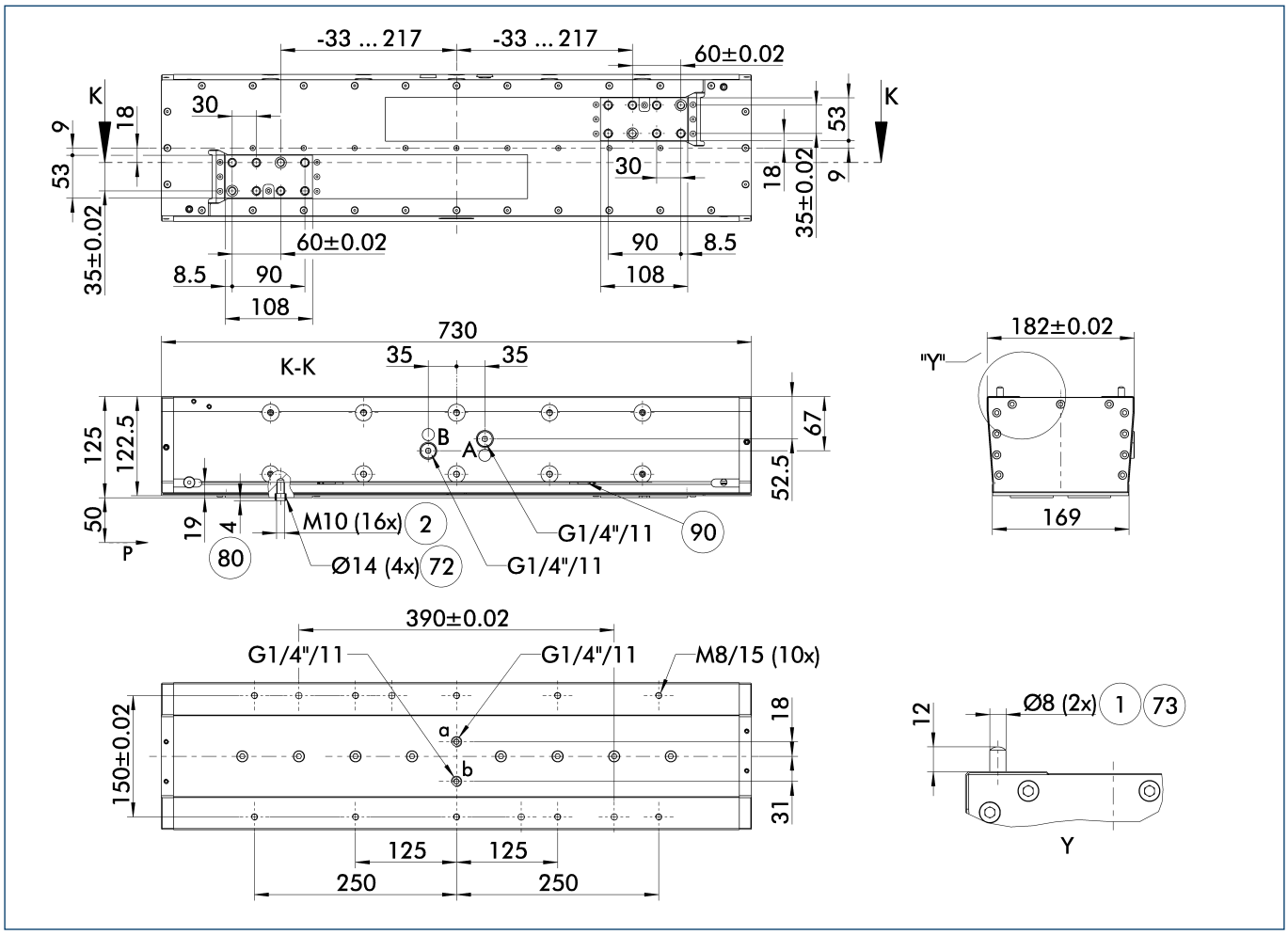

The drawing shows the basic version of the gripper with open jaws, without dimensional consideration of the options described below.

ⓘ The SDV-P pressure maintenance valve can also be used for I.D. or O.D. gripping alternatively or in addition to the spring-loaded, mechanical gripping force maintenance device (see catalog section on "Accessories").

A, a Main / direct connection, gripper opening

B, b Main / direct connection, gripper closing

(1) Gripper connection

(2) Finger connection

(72) Fit for centering sleeves

(73) Fit for centering pins

(80) Depth of the centering sleeve hole in the mating part

(90) MMS 22... sensor

Maximum permitted finger projection

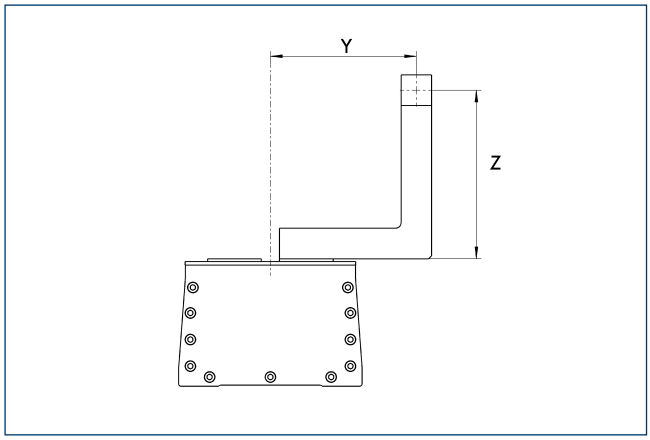

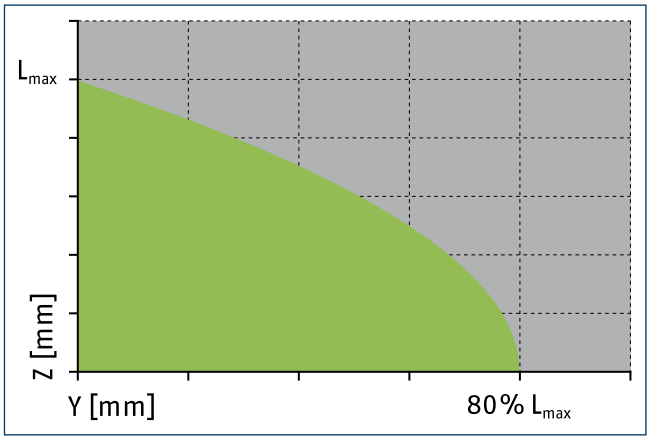

Permitted range

Inadmissible range

L_{max} is equivalent to the maximum permitted finger length, see the chart of technical specifications.

Hose-free direct connection

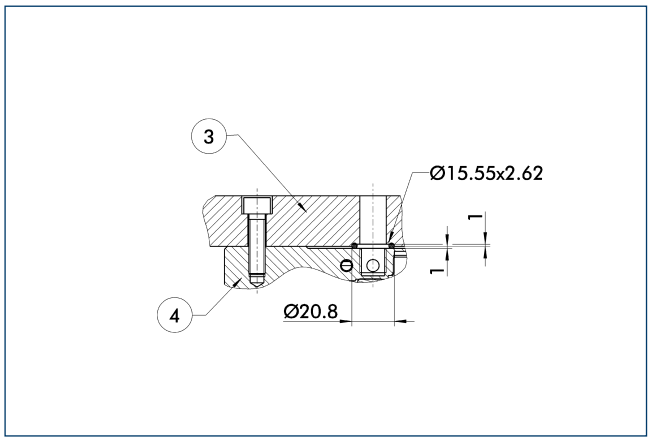

(3) Adapter (4) Gripper

The direct connection is used for supplying compressed air without hoses. Instead, the pressure medium is fed through bore-holes in the mounting plate.

Mounting kit for side mount

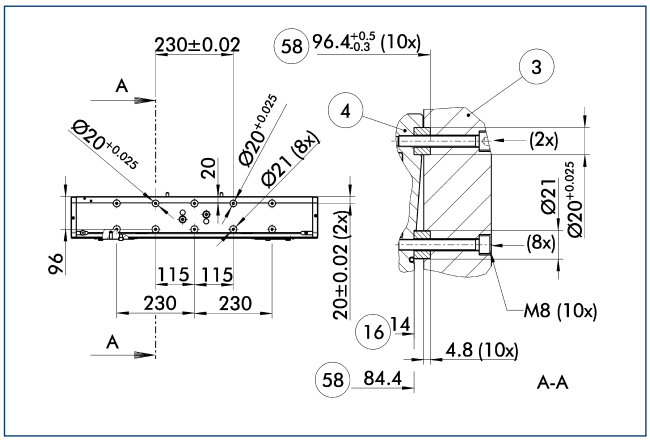

(3) Adapter (16) Max. depth of engagement
(4) Gripper (58) Distance from center of gripper

The mounting kit for side mount enables parallel and centric fastening at the side surface.

Description	ID	
Mounting kit for side mount		
AS-S PFH 250-300	0302026	

SDV-P pressure maintenance valve

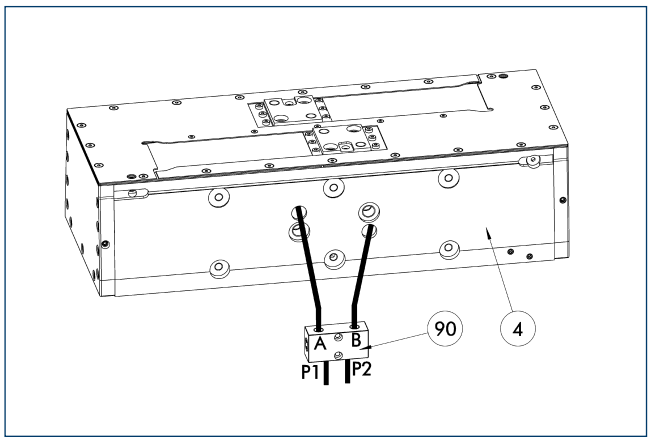

(4) Gripper (90) SDV-P pressure maintenance valve

The SDV-P pressure maintenance valves ensure that the pressure in the piston chamber of pneumatic gripping, rotary, linear, and quick-change modules is maintained temporarily during an emergency stop.

Description	ID	
Pressure maintenance valve		
SDV-P 10	0300108	

Mounting kit for proximity switch

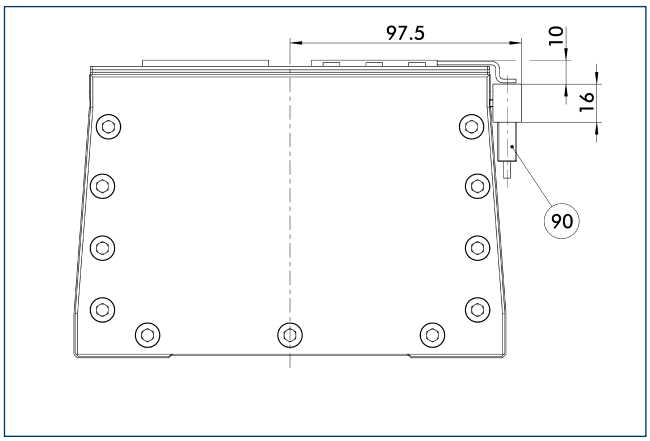

(90) IN ... sensor

The mounting kit enables assembly of two inductive proximity switches. The kit is fitted in the sensor slot of the slotted switch.

Description	ID	
Mounting kit for proximity switch		
HG-PFH 150-300	0300770	

ⓘ This mounting kit needs to be ordered optionally as an accessory.

Inductive proximity switches

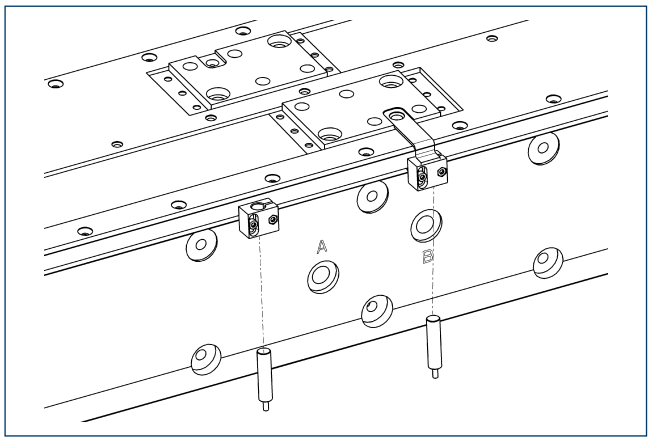

Limit position monitor can be mounted with mounting kit.

Description	ID	Often combined
Mounting kit for proximity switch		
HG-PFH 150-300	0300770	
Inductive proximity switches		
IN 80-S-M12	0301578	
IN 80-S-M8	0301478	●
INK 80-S	0301550	
Cable extensions		
KV BG12-SG12 3P-0030-PNP	0301999	
KV BG12-SG12 3P-0060-PNP	0301998	
KV BW08-SG08 3P-0030-PNP	0301495	
KV BW08-SG08 3P-0100-PNP	0301496	
KV BW08-SG08 3P-0200-PNP	0301497	●
KV BW12-SG12 3P-0030-PNP	0301595	
KV BW12-SG12 3P-0100-PNP	0301596	
KV BW12-SG12 3P-0200-PNP	0301597	
Clip for plug / socket		
CLI-M12	0301464	
CLI-M8	0301463	
Connection cables		
KA BG08-L 3P-0300-PNP	0301622	●
KA BG08-L 3P-0500-PNP	0301623	
KA BG12-L 3P-0500-PNP	30016369	
KA BW08-L 3P-0300-PNP	0301594	
KA BW08-L 3P-0500-PNP	0301502	
KA BW12-L 3P-0300-PNP	0301503	
KA BW12-L 3P-0500-PNP	0301507	
Sensor distributor		
V2-M8	0301775	●
V2-M12	0301776	●
V4-M12	0301747	
V4-M8	0301746	
V8-M12	0301752	
V8-M8	0301751	

ⓘ Two sensors (closer/S) are required for each unit, plus extension cables as an option. This mounting kit needs to be ordered optionally as an accessory. Please note the minimum permitted bending radii for the sensor cables, which are generally 35 mm.

MMS electronic magnetic switches

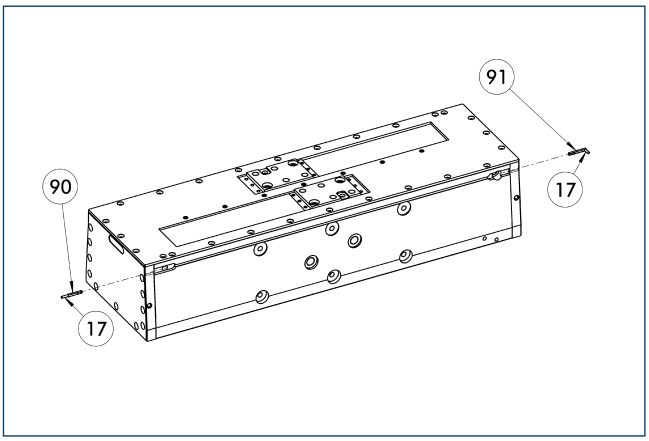

(17) Cable outlet
(91) MMS 22...-SA sensor
(90) MMS 22... sensor

End position monitoring for mounting in the C-slot.

Description	ID	Often combined
MMS electronic magnetic switches		
MMS 22-S-M8-PNP	0301032	●
MMSK 22-S-PNP	0301034	
MMS electronic magnetic switches with lateral cable outlet		
MMS 22-S-M8-PNP-SA	0301042	●
MMSK 22-S-PNP-SA	0301044	
Reed switches		
RMS 22-S-M8	0377720	●
Cable extensions		
KV BW08-SG08 3P-0030-PNP	0301495	
KV BW08-SG08 3P-0100-PNP	0301496	
KV BW08-SG08 3P-0200-PNP	0301497	●
Clip for plug / socket		
CLI-M8	0301463	
Connection cables		
KA BG08-L 3P-0300-PNP	0301622	●
KA BG08-L 3P-0500-PNP	0301623	
KA BW08-L 3P-0300-PNP	0301594	
KA BW08-L 3P-0500-PNP	0301502	
RSS radio sensor system		
RSS-T2	0377710	
Sensor distributor		
V2-M8	0301775	●
V4-M8	0301746	
V8-M8	0301751	

ⓘ Two sensors (closer/S) are required for each unit, plus extension cables as an option. Please note the minimum permitted bending radii for the sensor cables, which are generally 35 mm.

MMS PI1 programmable magnetic switches

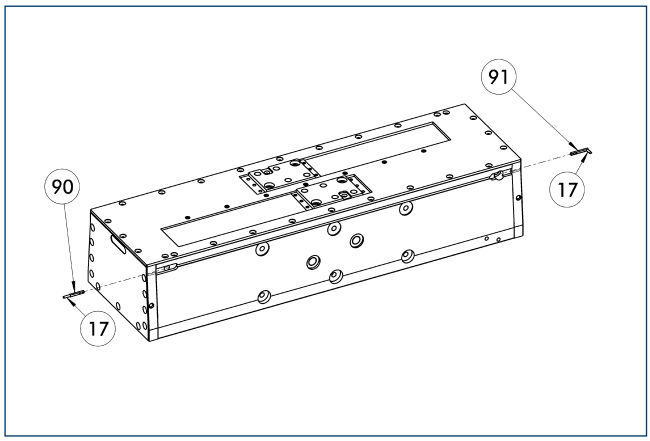

17 Cable outlet
91 MMS 22...-PI1-...-SA sensor
90 MMS 22...-PI1-... sensor

Position query with one programmable position per sensor and electronics integrated in sensor. Programmable via MT magnet teaching tool (included in the scope of delivery) or ST plug teaching tool (optional). Limit position query mounted in C-groove. If the ST plug teaching tools are listed in the table, teaching can only take place with the ST plug teaching tools.

Description	ID	Often combined
MMS PI1 programmable magnetic switches		
MMS 22-PI1-S-M8-PNP	0301160	●
MMSK 22-PI1-S-PNP	0301162	
MMS PI1-HD programmable magnetic switches with stainless steel housing		
MMS 22-PI1-S-M8-PNP-HD	0301110	●
MMSK 22-PI1-S-PNP-HD	0301112	
MMS PI1 programmable magnetic switches with lateral cable outlet		
MMS 22-PI1-S-M8-PNP-SA	0301166	●
MMSK 22-PI1-S-PNP-SA	0301168	

ⓘ Two sensors (closer/S) are required for each unit, plus extension cables as an option. Please note the minimum permitted bending radii for the sensor cables, which are generally 35 mm. Connection cable, cable extensions, and sensor distributors can be found in the table for the MMS 22.

PFH 300

SCHUNK Grippers pneumatic | 2-Finger Parallel Grippers | Long-stroke Gripper

Gripping force

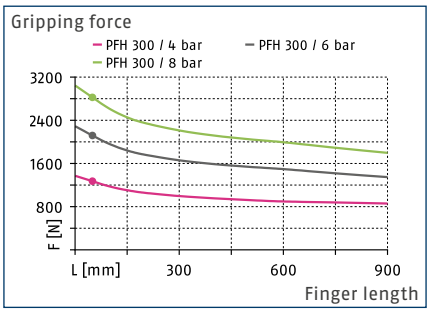

Finger load

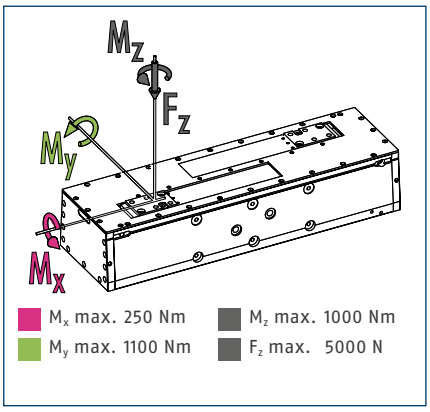

ⓘ The indicated moments and forces are static values, apply per base jaw and may occur simultaneously. M_y may arise in addition to the moment generated by the gripping force itself. If the max. permitted finger weight is exceeded, it is impreative to throttle the air supply so that the jaw movement occurs without any hitting or bouncing. Service life may be reduced.

Technical data

Description		PFH 300
ID		0302010
Stroke per jaw	[mm]	300
Closing- / opening force	[N]	2200/2200
Weight	[kg]	33.6
Recommended workpiece weight	[kg]	14.7
Fluid consumption per double stroke	[cm³]	3010
min. / max. operating pressure	[bar]	2/8
Nominal operating pressure	[bar]	6
Closing- / opening time	[s]	1.25/1.25
max. permitted finger length	[mm]	900
max. permitted weight per finger	[kg]	10
IP class		30
min. / max. ambient temperature	[°C]	5/90
Repeat accuracy	[mm]	0.02

ⓘ Requirements on the levelness of the bolting surface (in relation to the entire bolting surface for the gripper):
- < 0.02 mm with an edge length of up to 100 mm
- < 0.05 mm with an edge length of 100 mm or longer

Main view

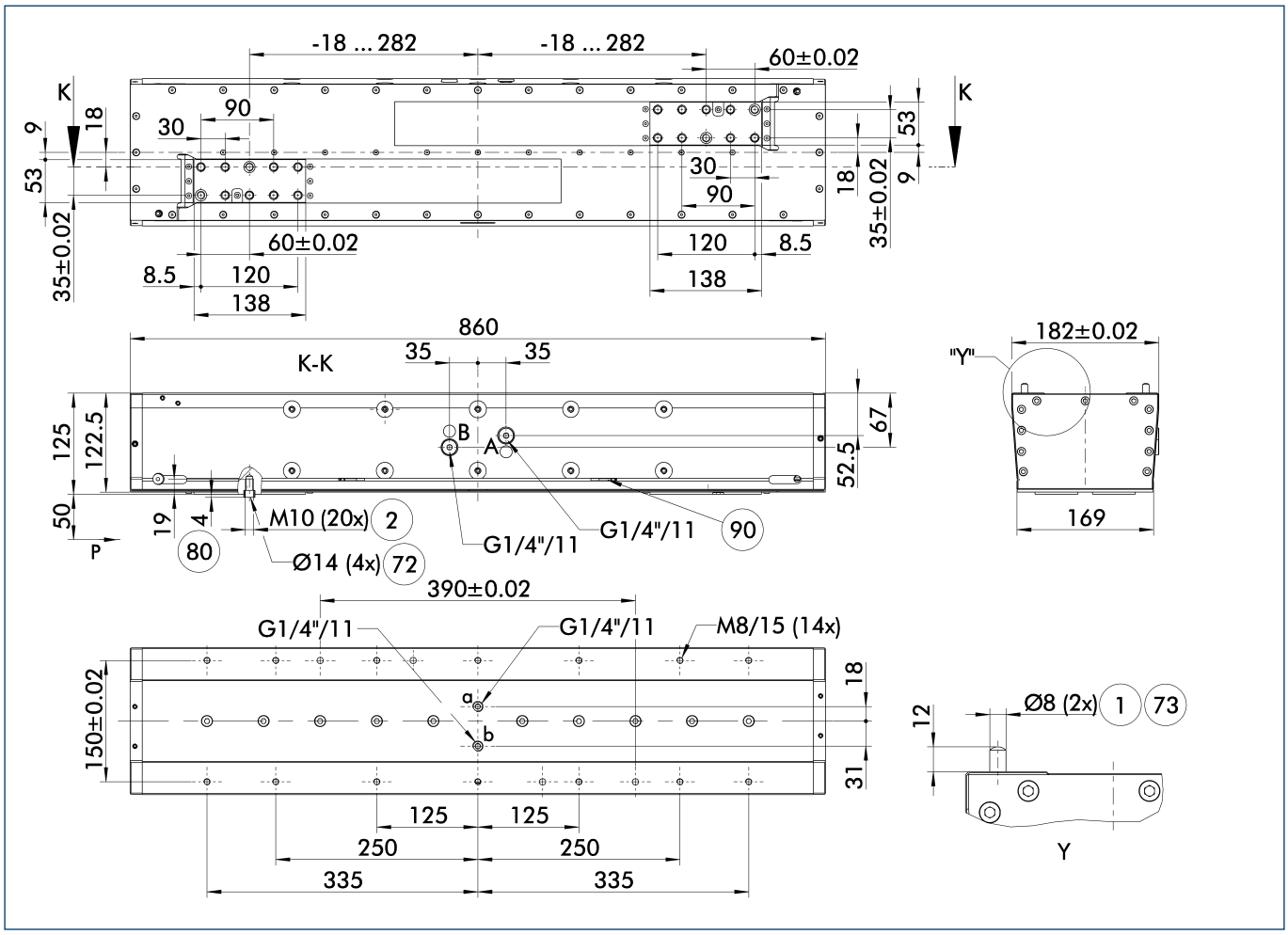

The drawing shows the basic version of the gripper with open jaws, without dimensional consideration of the options described below.

ⓘ The SDV-P pressure maintenance valve can also be used for I.D. or O.D. gripping alternatively or in addition to the spring-loaded, mechanical gripping force maintenance device (see catalog section on "Accessories").

A, a Main / direct connection, gripper opening

B, b Main / direct connection, gripper closing

(1) Gripper connection

(2) Finger connection

(72) Fit for centering sleeves

(73) Fit for centering pins

(80) Depth of the centering sleeve hole in the mating part

(90) MMS 22... sensor

Maximum permitted finger projection

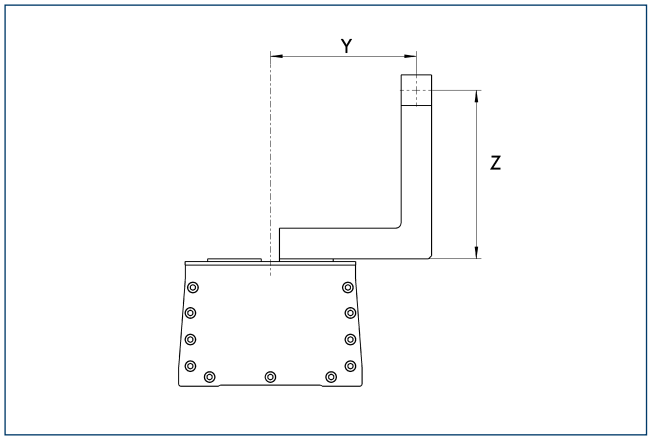

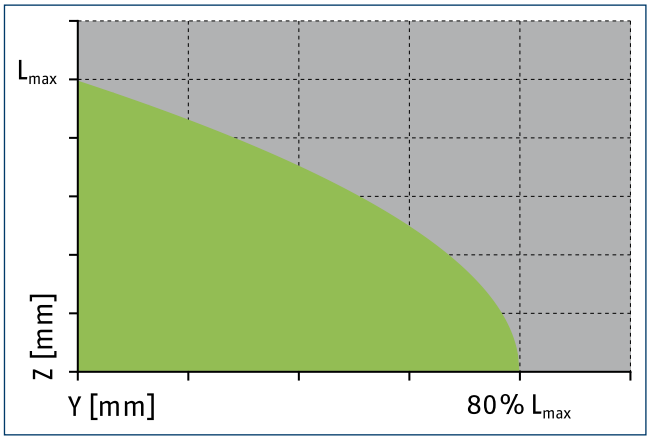

Permitted range

Inadmissible range

L_{max} is equivalent to the maximum permitted finger length, see the chart of technical specifications.

Hose-free direct connection

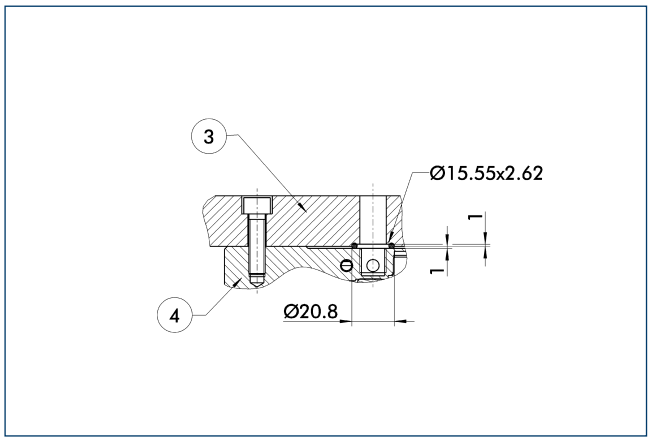

(3) Adapter (4) Gripper

The direct connection is used for supplying compressed air without hoses. Instead, the pressure medium is fed through bore-holes in the mounting plate.

Mounting kit for side mount

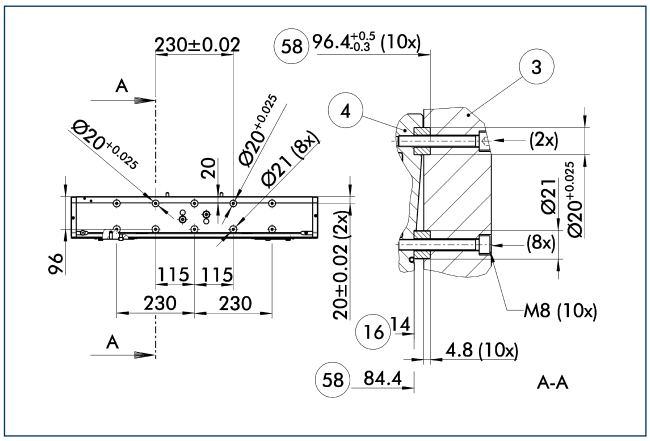

(3) Adapter (16) Max. depth of engagement
(4) Gripper (58) Distance from center of gripper

The mounting kit for side mount enables parallel and centric fastening at the side surface.

Description	ID	
Mounting kit for side mount		
AS-S PFH 250-300	0302026	

SDV-P pressure maintenance valve

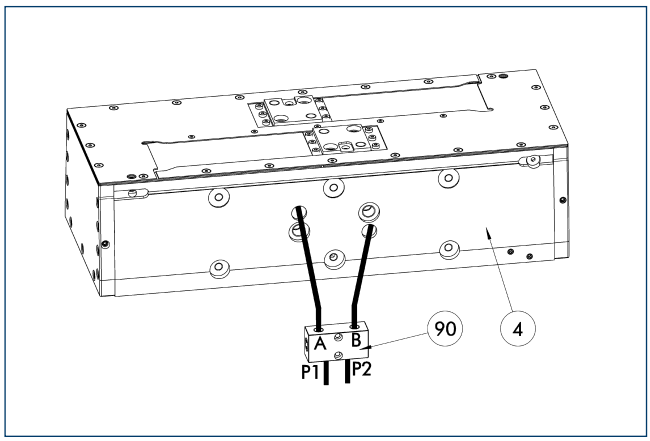

(4) Gripper (90) SDV-P pressure maintenance valve

The SDV-P pressure maintenance valves ensure that the pressure in the piston chamber of pneumatic gripping, rotary, linear, and quick-change modules is maintained temporarily during an emergency stop.

Description	ID	
Pressure maintenance valve		
SDV-P 10	0300108	

Mounting kit for proximity switch

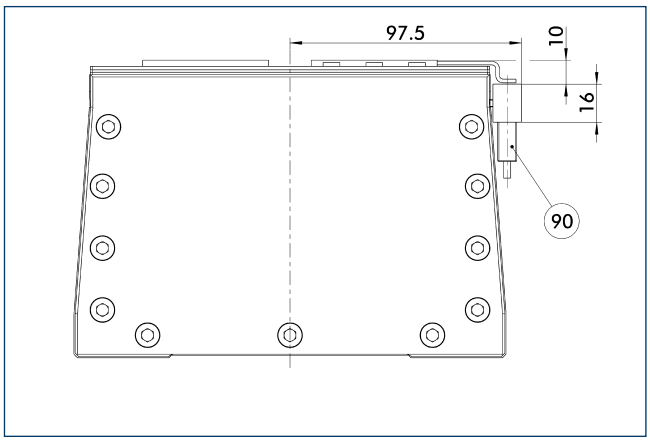

(90) IN ... sensor

The mounting kit enables assembly of two inductive proximity switches. The kit is fitted in the sensor slot of the slotted switch.

Description	ID	
Mounting kit for proximity switch		
HG-PFH 150-300	0300770	

ⓘ This mounting kit needs to be ordered optionally as an accessory.

Inductive proximity switches

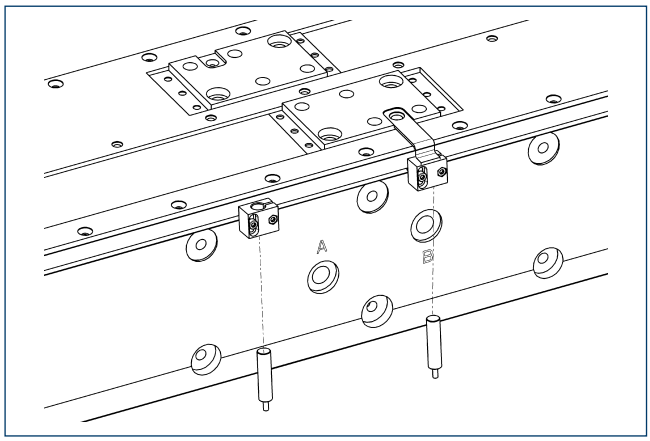

Limit position monitor can be mounted with mounting kit.

Description	ID	Often combined
Mounting kit for proximity switch		
HG-PFH 150-300	0300770	
Inductive proximity switches		
IN 80-S-M12	0301578	
IN 80-S-M8	0301478	●
INK 80-S	0301550	
Cable extensions		
KV BG12-SG12 3P-0030-PNP	0301999	
KV BG12-SG12 3P-0060-PNP	0301998	
KV BW08-SG08 3P-0030-PNP	0301495	
KV BW08-SG08 3P-0100-PNP	0301496	
KV BW08-SG08 3P-0200-PNP	0301497	●
KV BW12-SG12 3P-0030-PNP	0301595	
KV BW12-SG12 3P-0100-PNP	0301596	
KV BW12-SG12 3P-0200-PNP	0301597	
Clip for plug / socket		
CLI-M12	0301464	
CLI-M8	0301463	
Connection cables		
KA BG08-L 3P-0300-PNP	0301622	●
KA BG08-L 3P-0500-PNP	0301623	
KA BG12-L 3P-0500-PNP	30016369	
KA BW08-L 3P-0300-PNP	0301594	
KA BW08-L 3P-0500-PNP	0301502	
KA BW12-L 3P-0300-PNP	0301503	
KA BW12-L 3P-0500-PNP	0301507	
Sensor distributor		
V2-M8	0301775	●
V2-M12	0301776	●
V4-M12	0301747	
V4-M8	0301746	
V8-M12	0301752	
V8-M8	0301751	

ⓘ Two sensors (closer/S) are required for each unit, plus extension cables as an option. This mounting kit needs to be ordered optionally as an accessory. Please note the minimum permitted bending radii for the sensor cables, which are generally 35 mm.

MMS electronic magnetic switches

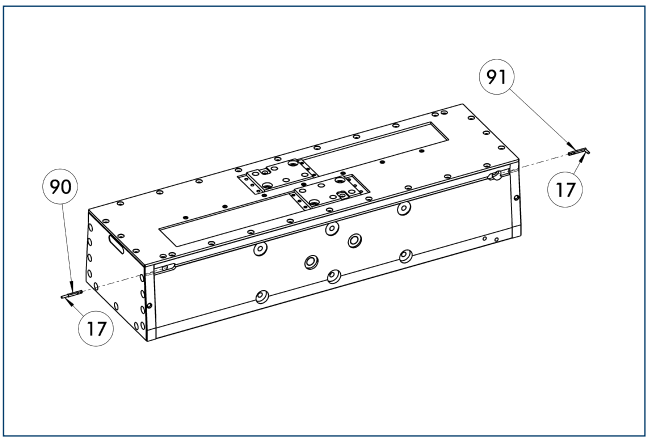

(17) Cable outlet
(91) MMS 22...-SA sensor
(90) MMS 22... sensor

End position monitoring for mounting in the C-slot.

Description	ID	Often combined
MMS electronic magnetic switches		
MMS 22-S-M8-PNP	0301032	●
MMSK 22-S-PNP	0301034	
MMS electronic magnetic switches with lateral cable outlet		
MMS 22-S-M8-PNP-SA	0301042	●
MMSK 22-S-PNP-SA	0301044	
Reed switches		
RMS 22-S-M8	0377720	●
Cable extensions		
KV BW08-SG08 3P-0030-PNP	0301495	
KV BW08-SG08 3P-0100-PNP	0301496	
KV BW08-SG08 3P-0200-PNP	0301497	●
Clip for plug / socket		
CLI-M8	0301463	
Connection cables		
KA BG08-L 3P-0300-PNP	0301622	●
KA BG08-L 3P-0500-PNP	0301623	
KA BW08-L 3P-0300-PNP	0301594	
KA BW08-L 3P-0500-PNP	0301502	
RSS radio sensor system		
RSS-T2	0377710	
Sensor distributor		
V2-M8	0301775	●
V4-M8	0301746	
V8-M8	0301751	

ⓘ Two sensors (closer/S) are required for each unit, plus extension cables as an option. Please note the minimum permitted bending radii for the sensor cables, which are generally 35 mm.

MMS PI1 programmable magnetic switches

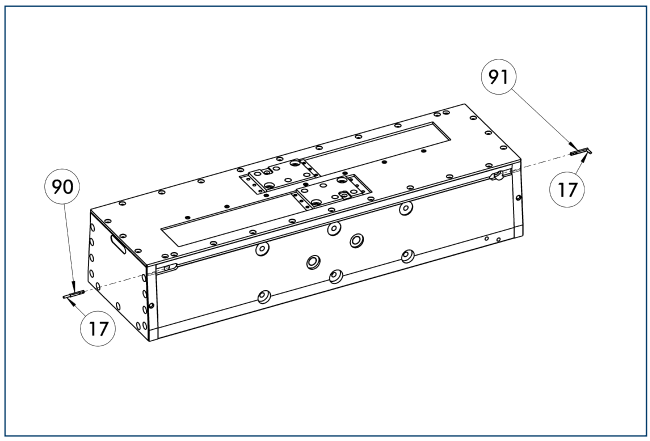

17 Cable outlet
91 MMS 22...-PI1-...-SA sensor
90 MMS 22...-PI1-... sensor

Position query with one programmable position per sensor and electronics integrated in sensor. Programmable via MT magnet teaching tool (included in the scope of delivery) or ST plug teaching tool (optional). Limit position query mounted in C-groove. If the ST plug teaching tools are listed in the table, teaching can only take place with the ST plug teaching tools.

Description	ID	Often combined
MMS PI1 programmable magnetic switches		
MMS 22-PI1-S-M8-PNP	0301160	●
MMSK 22-PI1-S-PNP	0301162	
MMS PI1-HD programmable magnetic switches with stainless steel housing		
MMS 22-PI1-S-M8-PNP-HD	0301110	●
MMSK 22-PI1-S-PNP-HD	0301112	
MMS PI1 programmable magnetic switches with lateral cable outlet		
MMS 22-PI1-S-M8-PNP-SA	0301166	●
MMSK 22-PI1-S-PNP-SA	0301168	

ⓘ Two sensors (closer/S) are required for each unit, plus extension cables as an option. Please note the minimum permitted bending radii for the sensor cables, which are generally 35 mm. Connection cable, cable extensions, and sensor distributors can be found in the table for the MMS 22.

Light. Stable. Flexible.
CGH Long-stroke Gripper

Gripper with weight optimized carbon fiber housing and large, flexibly adjustable jaw stroke for efficient handling of large parts and / or a broad range of parts.

Field of Application

Clean to slightly dirty working environments, especially suitable for the handling of car rims

Advantages – Your benefit

Robust bearing guidance for the precise handling of all kinds of workpieces

High moment payloads due to the guiding suitable for using long gripper fingers

Moment decoupling in the base jaws permit very large fingers via hinge bolts

Toothed belt for power transmission and synchronised, centric gripping

Stroke adjustment gripper open and gripper closed are seperately adjustable for faster cycle times and reduced fluid consumption

Comprehensive sensor accessory program for versatile interrogation possibilities and control of stroke position

Available for standard robot adaptations according to ISO 9409

Sizes	Weight	Gripping force	Stroke per jaw	Workpiece weight
Quantity: 1	11.65 kg	2500 N	100 .. 160 mm	12.7 kg

Functional Description

Inside of the gripper are aluminum tubes which form the cylindrical housing through which the carbon fiber piston tube with aluminum end caps travels.

The base jaws are set in motion with the application of pressure to the piston chamber.
The end of the stroke is dampened with an elastomer pad.

① **Housing**
Made from a highly rigid, single piece carbon fiber with reduced mass and designed for high stress due to incorporated fibers

② **Base jaw**
for adaptation of the workpiece-specific gripper fingers, torque uncoupling with hinge bolt enables very long fingers

③ **Roller guide**
for precise and robust gripping due to the heavy duty roller guide with 4 carriages per base jaw

④ **Belt drive**
for power transmission and synchronised, centric gripping

⑤ **Damper**
Integrated end position dampening allows for maximum energy absorbtion with minimum space requirements

⑥ **Stroke adjustment**
Gripper open and gripper closed are seperately adjus-table for faster cycle times and reduced fluid consumption

CAD data, operating manuals and other current product documents are available at **www.schunk.com**

General Notes about the Series

Housing material: The housings is made of carbonfiber reinforced plastic, and is manufactured in an RTM process

Actuation: pneumatic, with filtered compressed air as per DIN ISO 8573-1: 7 4 4

Warranty: 24 months (details, general terms and conditions and operating manuals can be downloaded at www.schunk.com)

Gripping force maintenance device: possible with SDV-P pressure maintenance valve

Gripping force: is the arithmetic total of the gripping force applied to each gripper jaw at distance P (see illustration).

Finger length: is measured from the upper edge of the gripper housing in the direction of the main axis. The breach of the max. permitted finger length can bring higher abrasion. The maximum permissible finger length applies up to the nominal operating pressure. With higher pressures, the finger length must be reduced proportionally to the nominal operating pressure.

Repeat accuracy: is defined as the spread of the limit position after 100 consecutive strokes.

Workpiece weight: is calculated for a force-fit connection with a coefficient of friction of 0.1 and a safety factor of 2 against slippage of the workpiece on acceleration due to gravity g. Considerably heavier workpiece weights are permitted with form-fit gripping.

Closing and opening times: are purely the times that the base jaws or fingers are in motion. Valve switching times, hose filling times or PLC reaction times are not included in the above times and must be taken into consideration when determining cycle times.

Application example

Gripping unit with carbon fiber housing for handling of automobile wheel rims.

1. CGH 2-Finger Long-stroke Gripper
2. Sheet Metal Fingers
3. Workpiece

SCHUNK offers more ...

The following components make the product CGH even more productive – the suitable addition for the highest functionality, flexibility, reliability, and controlled production.

Centering Sleeves

Inductive Proximity Switches

Sensor Cables

Sensor Distributor

SWS Quick-change System

Flange

DDF 2 Rotary Feed-through

Gripper Pads

ⓘ Further information regarding the products can be found on the following product pages or at www.schunk.com. Please contact us for further information: SCHUNK technical hotline +49-7133-103-2696

Options and special Information

Efficient: The stroke can be separately adjusted for opening and closing. It is used for reducing cycle times, and helps to save compressed air

CGH 80

SCHUNK Grippers pneumatic | 2-Finger Parallel Grippers | Long-stroke Gripper

Gripping force, I.D. gripping

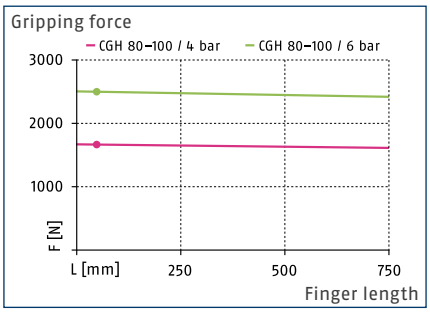

ⓘ The maximum permissible finger length of the respective variant is specified in the technical details.

Forces and moments

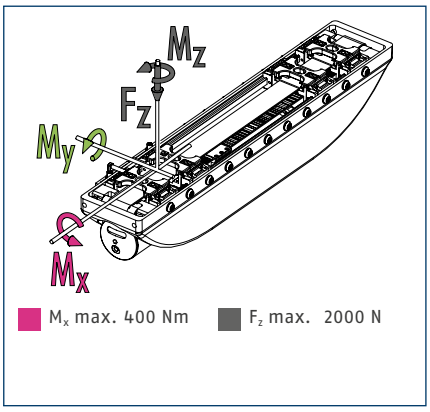

ⓘ The indicated moments and forces are statical values, apply for each base jaw and should not appear simultaneously. If the max. permitted finger weight is exceeded, it is impreative to throttle the air supply so that the jaw movement occurs without any hitting or bouncing. Service life may be reduced.

Technical data

Description		CGH 80-100	CGH 80-120	CGH 80-140	CGH 80-160
ID		0370430	0370431	0370432	0370433
Stroke per jaw	[mm]	100	120	140	160
Closing- / opening force	[N]	2500/2500	2500/2500	2500/2500	2500/2500
Weight	[kg]	11.65	11.65	11.65	11.65
Recommended workpiece weight	[kg]	12.7	12.7	12.7	12.7
Fluid consumption per double stroke	[cm³]	1005	1210	1410	1650
min. / max. operating pressure	[bar]	2/6	2/6	2/6	2/6
Nominal operating pressure	[bar]	6	6	6	6
Closing- / opening time	[s]	0.85/0.85	1/1	1.2/1.2	1.35/1.35
max. permitted finger length	[mm]	750	650	550	450
max. permitted weight per finger	[kg]	10	9	8	7
IP class		30	30	30	30
min. / max. ambient temperature	[°C]	5/75	5/75	5/75	5/75
Repeat accuracy	[mm]	0.05	0.05	0.05	0.05
Moments M_y max./M_z max.	[Nm]	1250/1250	1150/1150	1000/1000	800/800

ⓘ Requirements on the levelness of the bolting surface (in relation to the entire bolting surface for the gripper):
- < 0.02 mm with an edge length of up to 100 mm
- < 0.05 mm with an edge length of 100 mm or longer

Main view

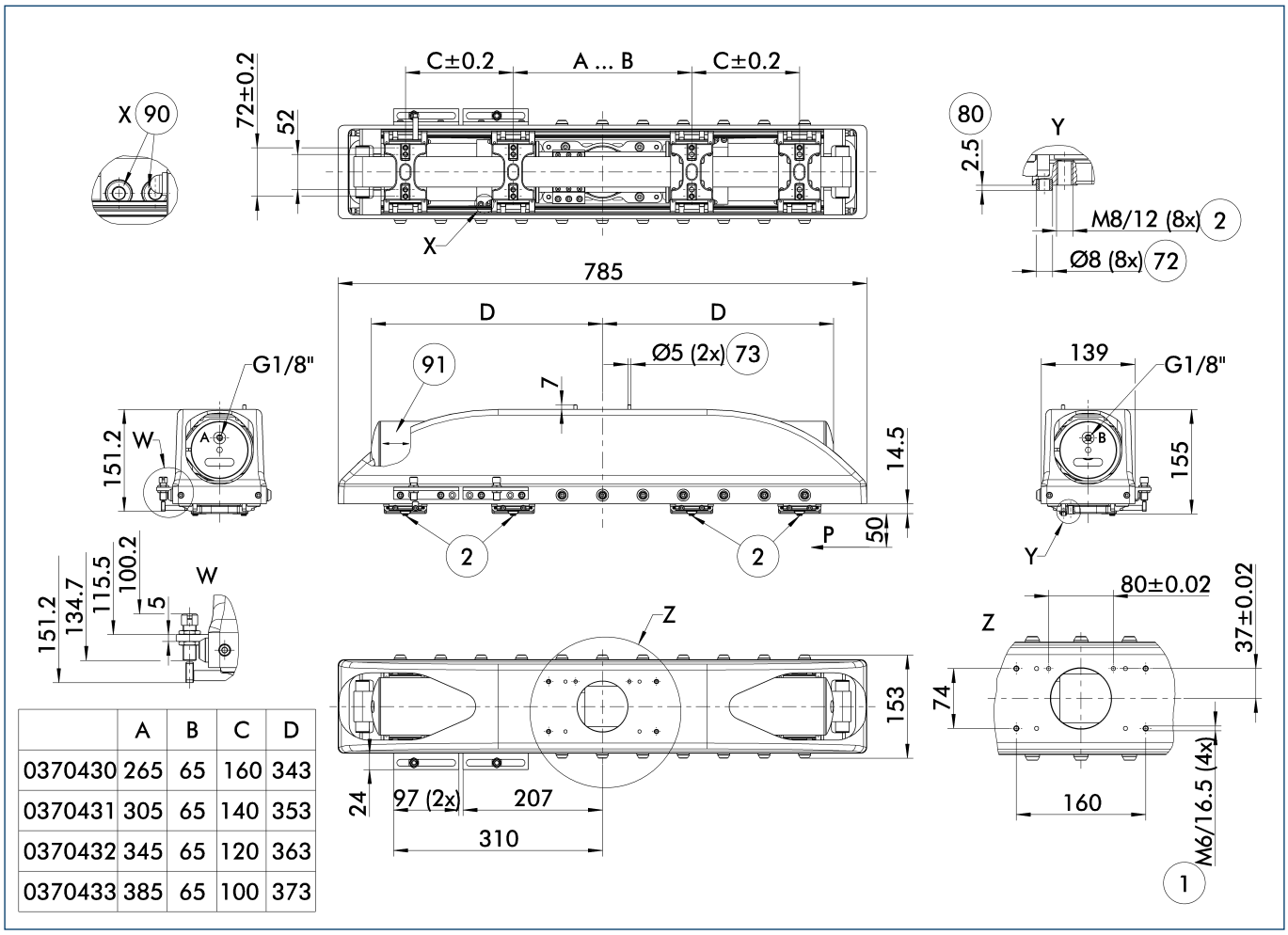

	A	B	C	D
0370430	265	65	160	343
0370431	305	65	140	353
0370432	345	65	120	363
0370433	385	65	100	373

The drawing shows the gripper in the basic version with closed jaws, without dimensional consideration of the options described below.

ⓘ The SDV-P pressure maintenance valve can be used as a gripping force maintenance device (see catalog section on "Accessories").

(1) Gripper connection
(2) Finger connection
(72) Fit for centering sleeves
(73) Fit for centering pins
(80) Depth of the centering sleeve hole in the mating part
(90) Mounting screws for stroke adjustment
(91) Stroke adjustment

Moment decoupling

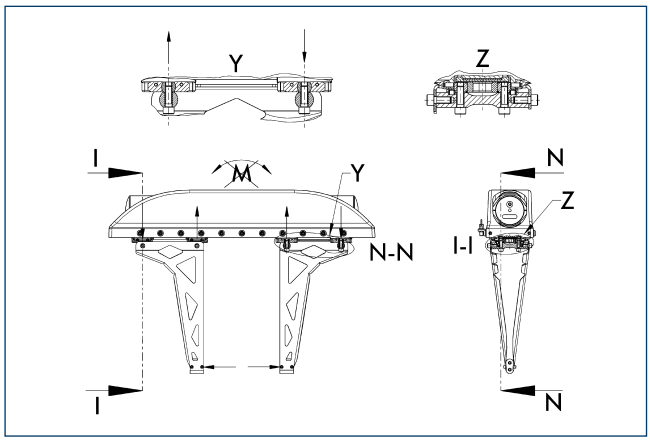

The rotary hinge bolts of the guided slides convert the arising gripping torque into pure tensile and/or pressure forces. The use of long fingers is possible for gentle and low-wear handling.

Stroke adjustment

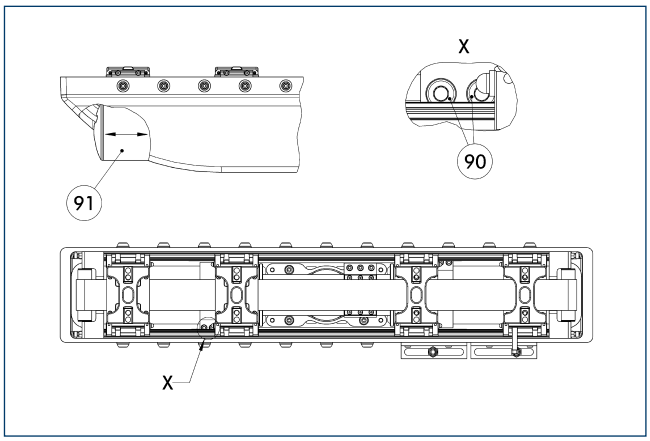

(90) Mounting screws for stroke adjustment
(91) Stroke adjustment

Adapter flange according to ISO-9409-1-100

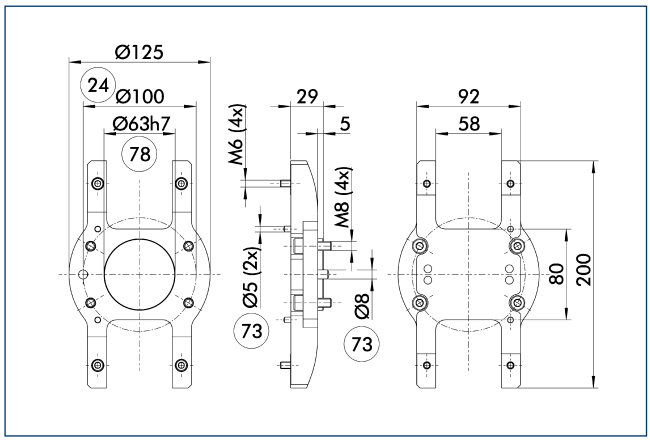

24 Bolt circle
78 Fitting for centering
73 Fit for centering pins

Description	ID	
ISO flanges		
ADF 100	0308092	

Adapter flange according to ISO-9409-1-125

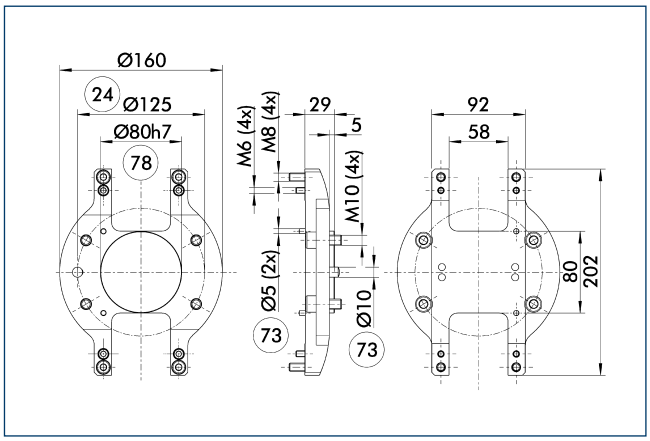

24 Bolt circle
78 Fitting for centering
73 Fit for centering pins

Description	ID	
ISO flanges		
ADF 125	0308093	

Adapter flange according to ISO-9409-1-160

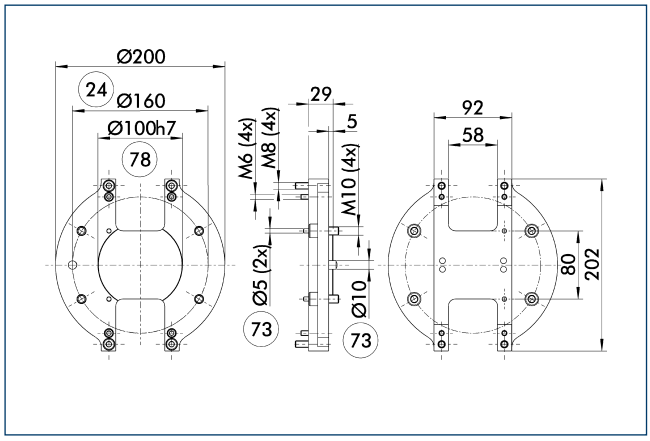

24 Bolt circle
78 Fitting for centering
73 Fit for centering pins

Description	ID	
ISO flanges		
ADF 160	0308094	

Adapter plate

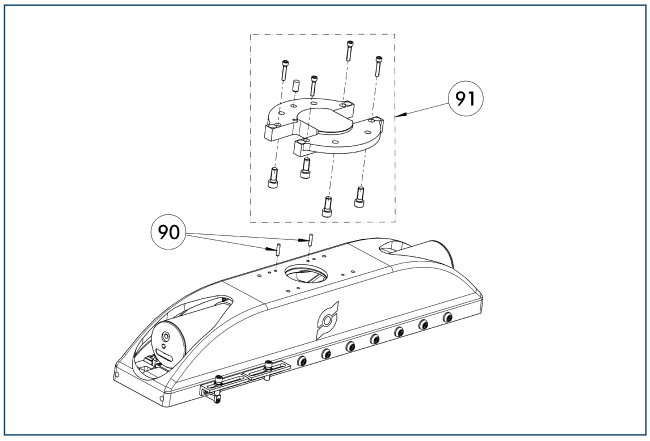

90 Included in the gripper's scope of delivery
91 Included in the adapter flange's scope of delivery

Adapter plate for connecting further SCHUNK components or customized attachments.

Description	ID	
ISO flanges		
ADF 100	0308092	
ADF 125	0308093	
ADF 160	0308094	

Inductive proximity switches

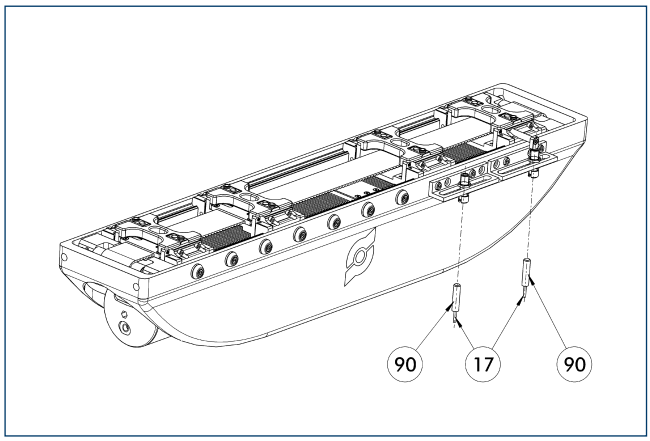

17 Cable outlet
90 IN ... sensor

Description	ID	Often combined
Inductive proximity switches		
IN 80-S-M12	0301578	
IN 80-S-M8	0301478	●
INK 80-S	0301550	
Cable extensions		
KV BG12-SG12 3P-0030-PNP	0301999	
KV BG12-SG12 3P-0060-PNP	0301998	
KV BW08-SG08 3P-0030-PNP	0301495	
KV BW08-SG08 3P-0100-PNP	0301496	
KV BW08-SG08 3P-0200-PNP	0301497	●
KV BW12-SG12 3P-0030-PNP	0301595	
KV BW12-SG12 3P-0100-PNP	0301596	
KV BW12-SG12 3P-0200-PNP	0301597	
Clip for plug / socket		
CLI-M12	0301464	
CLI-M8	0301463	
Connection cables		
KA BG08-L 3P-0300-PNP	0301622	●
KA BG08-L 3P-0500-PNP	0301623	
KA BG12-L 3P-0500-PNP	30016369	
KA BW08-L 3P-0300-PNP	0301594	
KA BW08-L 3P-0500-PNP	0301502	
KA BW12-L 3P-0300-PNP	0301503	
KA BW12-L 3P-0500-PNP	0301507	
Sensor distributor		
V2-M8	0301775	●
V2-M12	0301776	●
V4-M12	0301747	
V4-M8	0301746	
V8-M12	0301752	
V8-M8	0301751	

ⓘ Two sensors (closer/S) are required for each unit, plus extension cables as an option. Please note the minimum permitted bending radii for the sensor cables, which are generally 35 mm.

Strong. Robust. Flexible.

SPG Heavy-duty Gripper

Sturdy gripper for heavy components and a broad part range, equipped with robust guidances and therefore suitable for high gripping forces and maximum moment loads

Field of Application

Suitable for clean working environments, covers a broad range of parts due to its long jaw stroke and high gripping forces for heavy workpieces

Advantages – Your benefit

Solid guides for precise handling

High maximum moments possible suitable for using long gripper fingers

High efficiency through direct drive

Mounting from three sides in three screw directions for universal and flexible gripper assembly

Air supply via hose-free direct connection or screw connections for flexible pressure supply in all automated systems

Sizes	Weight	Gripping force	Stroke per jaw	Workpiece weight
Quantity: 1	35 kg	10000 N	100 mm	50 kg

Functional Description

The aligned base jaws are actuated with compressed air directly by the fixed piston, which opens and closes them. The base jaws are synchronized by the rack and pinion kinematics.

The direct flow of force enables a high degree of efficiency and therefore very high gripping forces.

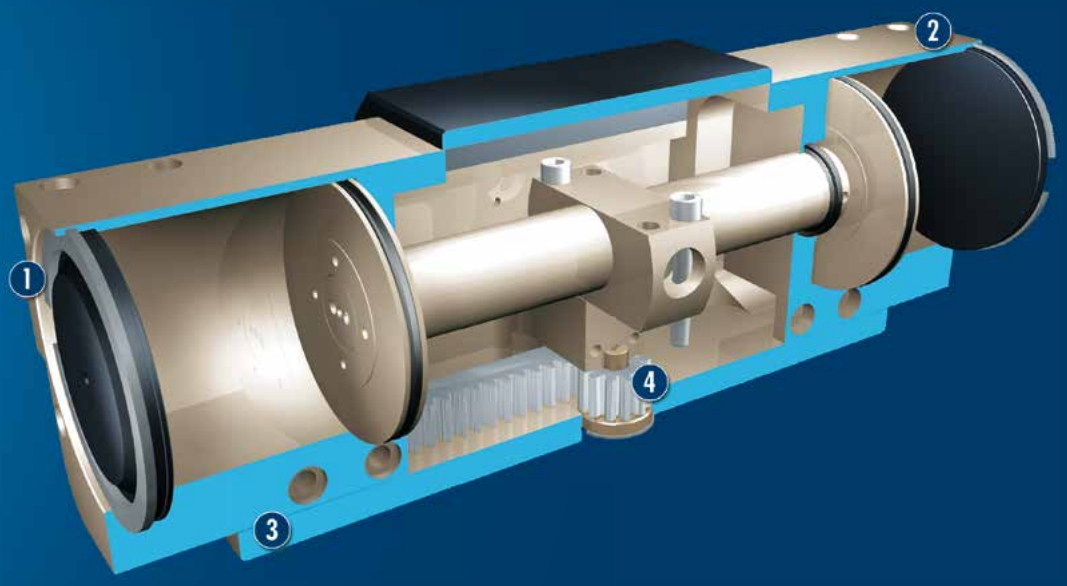

① **Sliding guide**
Precise gripping due to the use of a highly loadable guidance with minimum play

② **Base jaw**
for the connection of workpiece-specific gripper fingers

③ **Housing**
Weight-optimized through application of high-strength aluminum alloy

④ **Kinematics**
Pinion and rack principle for centric clamping, even at large strokes

CAD data, operating manuals and other current product documents are available at **www.schunk.com**

General Notes about the Series

Housing material: Aluminum alloy, anodized

Base jaw material: Aluminum alloy, anodized

Actuation: pneumatic, with filtered compressed air as per DIN ISO 8573-1: 7 4 4

Warranty: 24 months (details, general terms and conditions and operating manuals can be downloaded at www.schunk.com)

Scope of delivery: Centering sleeves, cupped-type lubricating nipples, O-rings for direct connection, assembly and operating manual with manufacturer's declaration

Gripping force maintenance device: with version with ID no. 0302120 with integrated pressure maintenance valve, with version with ID no. 0302121 retrofittable with external pressure maintenance valve

Gripping force: is the arithmetic total of the gripping force applied to each gripper jaw at distance P (see illustration).

Finger length: is measured from the upper edge of the gripper housing in the direction of the main axis. The breach of the max. permitted finger length can bring higher abrasion. The maximum permissible finger length applies up to the nominal operating pressure. With higher pressures, the finger length must be reduced proportionally to the nominal operating pressure.

Repeat accuracy: is defined as the spread of the limit position after 100 consecutive strokes.

Workpiece weight: is calculated for a force-fit connection with a coefficient of friction of 0.1 and a safety factor of 2 against slippage of the workpiece on acceleration due to gravity g. Considerably heavier workpiece weights are permitted with form-fit gripping.

Closing and opening times: are purely the times that the base jaws or fingers are in motion. Valve switching times, hose filling times or PLC reaction times are not included in the above times and must be taken into consideration when determining cycle times.

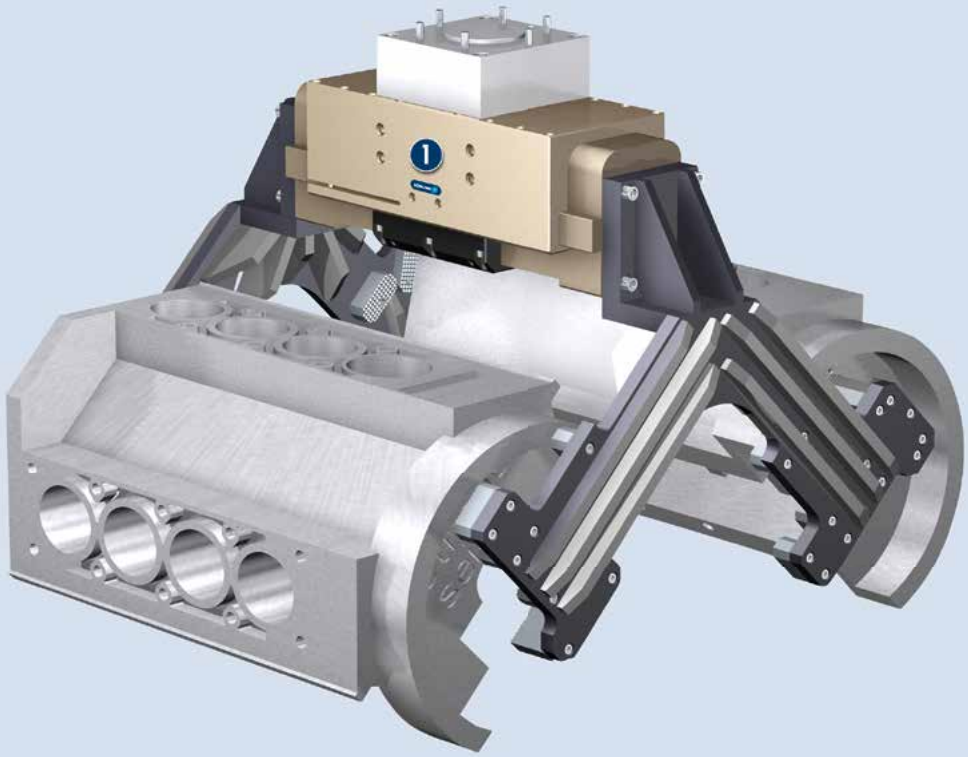

Application example

Gripper unit for heavy V8 motors

1 SPG 2-Finger Heavy-duty Gripper

SCHUNK offers more ...

The following components make the product SPG even more productive – the suitable addition for the highest functionality, flexibility, reliability, and controlled production.

Centering Sleeves

Fittings

Magnetic Switches

Inductive Proximity Switches

Sensor Distributor

Gripper Pads

Sensor Cables

Plastic Inserts

SDV-P Pressure Maintenance Valve

ⓘ Further information regarding the products can be found on the following product pages or at www.schunk.com. Please contact us for further information: SCHUNK technical hotline +49-7133-103-2696

Options and special Information

Two TM6 lubricating nipples on either side for relubricating the base jaws and purge air connections are already provided.
Gripping force maintenance device: The SPG 100 (ID 0302121) with reduced opening and closing times of 1.5 s does not feature an integrated pressure maintenance valve as a gripping force safety device.
Precision version P: for the highest accuracy

SPG 100

SCHUNK Grippers pneumatic | 2-Finger Parallel Grippers | Heavy-duty Gripper

Gripping force, O.D. gripping

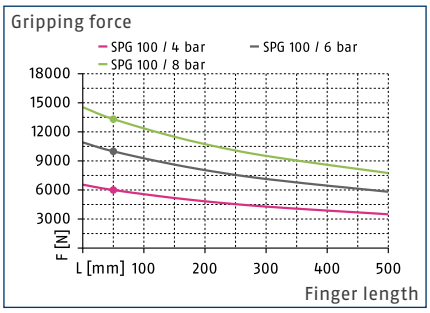

Gripping force, I.D. gripping

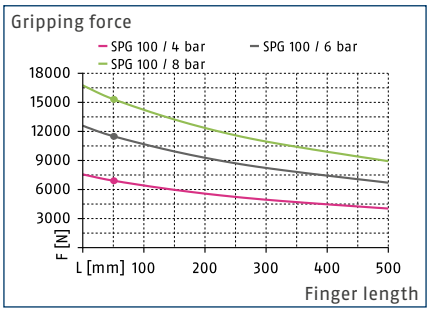

Finger load

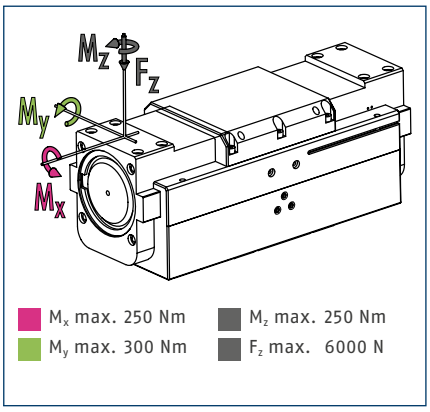

ⓘ The indicated moments and forces are static values, apply per base jaw and may occur simultaneously. M_y may arise in addition to the moment generated by the gripping force itself. If the max. permitted finger weight is exceeded, it is impreative to throttle the air supply so that the jaw movement occurs without any hitting or bouncing. Service life may be reduced.

Technical data

Description		SPG 100	SPG 100-SDV-P
ID		0302121	0302120
Stroke per jaw	[mm]	100	100
Closing- / opening force	[N]	10000/11480	10000/11480
Weight	[kg]	35	35
Recommended workpiece weight	[kg]	50	50
Fluid consumption per double stroke	[cm³]	4600	4600
min. / max. operating pressure	[bar]	2/8	2/8
Nominal operating pressure	[bar]	6	6
Closing- / opening time	[s]	1.5/1.5	3/3
max. permitted finger length	[mm]	500	500
max. permitted weight per finger	[kg]	15	15
IP class		30	30
min. / max. ambient temperature	[°C]	5/90	5/90
Repeat accuracy	[mm]	0.1	0.1

ⓘ The closing and opening times can be further reduced by fitting rapid deaeration valves to the air connections. However, care must be taken to ensure that the jaw motion occurs without any hitting or bouncing.

Main view

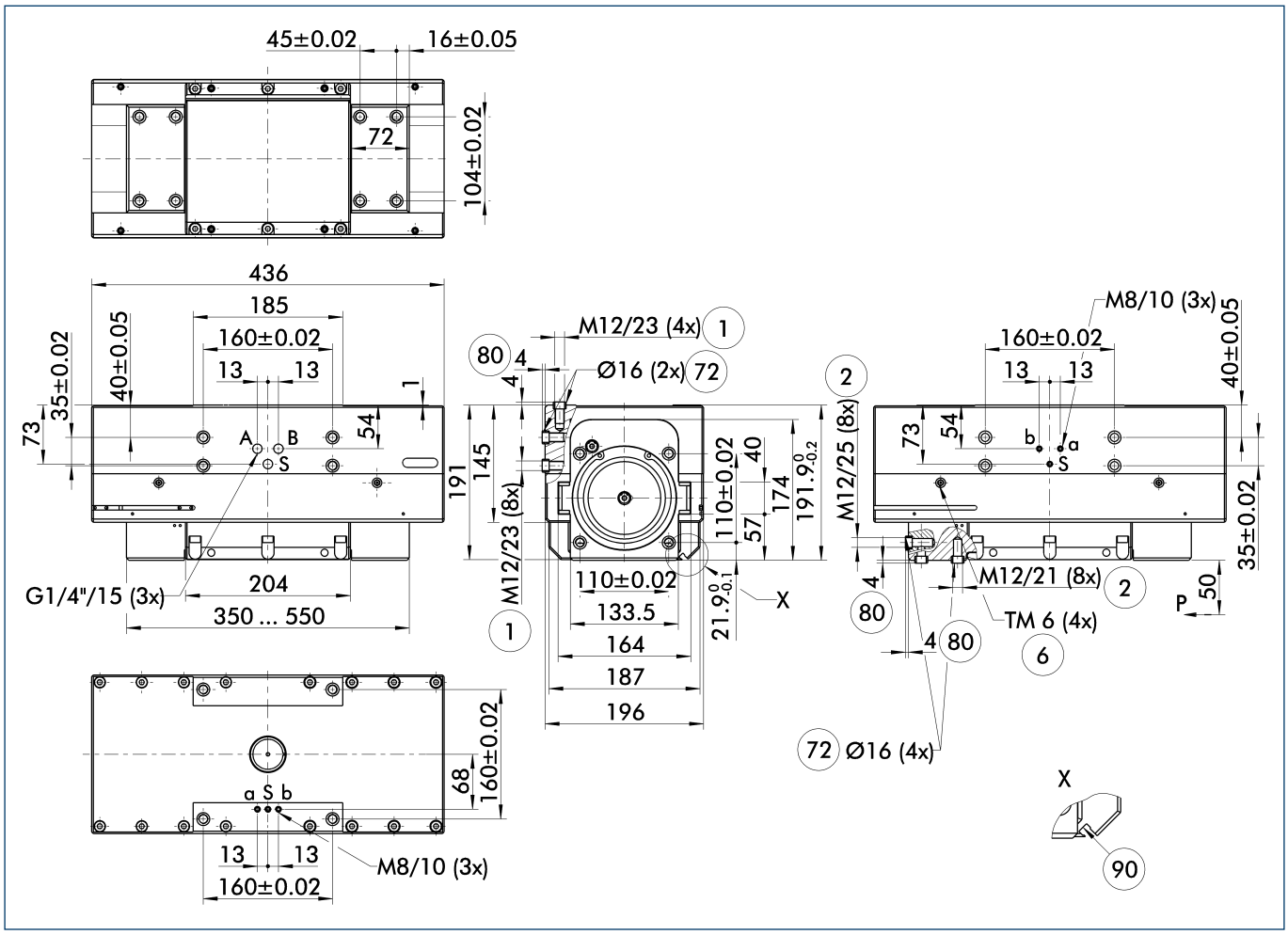

The drawing shows the gripper in the basic version with closed jaws, without dimensional consideration of the options described below.

ⓘ The SDV-P pressure maintenance valve can be used as a gripping force maintenance device (see catalog section on "Accessories").

A, a Main / direct connection, gripper opening

B, b Main / direct connection, gripper closing

S Air purge connection (0.5 ... 1 bar)

(1) Gripper connection

(2) Finger connection

(6) Lubricating nipple connection

(72) Fit for centering sleeves

(80) Depth of the centering sleeve hole in the mating part

(90) MMS 30

Maximum permitted finger projection

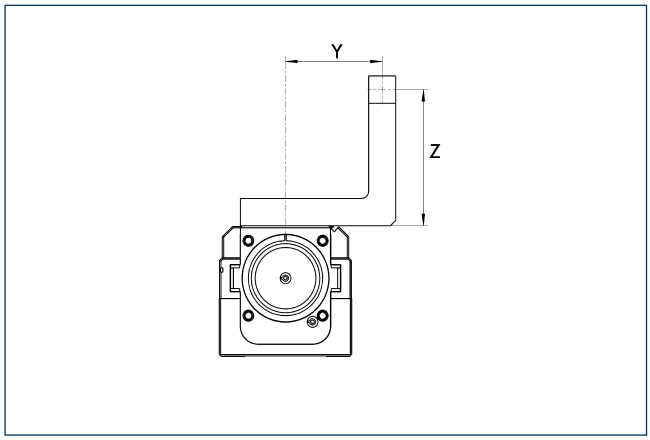

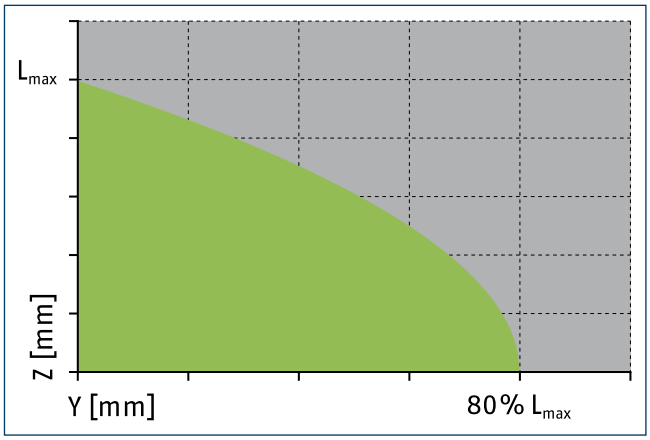

Permitted range

Inadmissible range

L_{max} is equivalent to the maximum permitted finger length, see the chart of technical specifications.

Hose-free direct connection M8

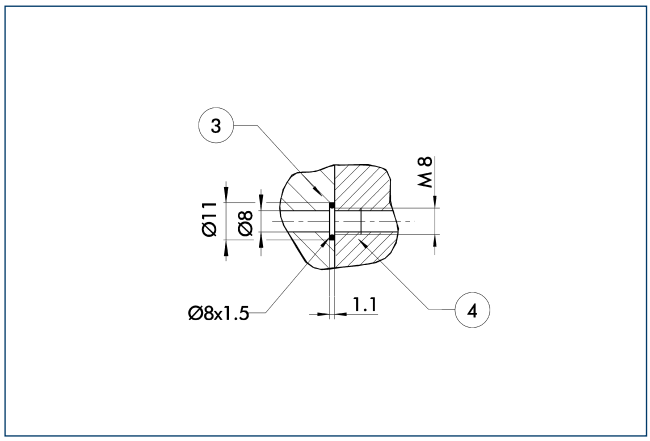

3 Adapter

4 Gripper

The direct connection is used for supplying compressed air without hoses. Instead, the pressure medium is fed through bore-holes in the mounting plate.

Mounting kit for proximity switch

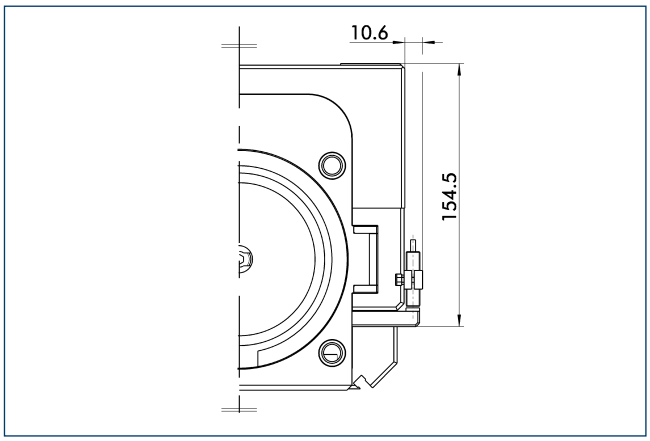

The mounting kit comprises mount, switching lug / cam and mounting screws. Proximity switches must be ordered separately.

Description	ID	
Mounting kit for proximity switch		
HG-SPG 100	0300765	

ⓘ This mounting kit needs to be ordered optionally as an accessory.

Inductive proximity switches

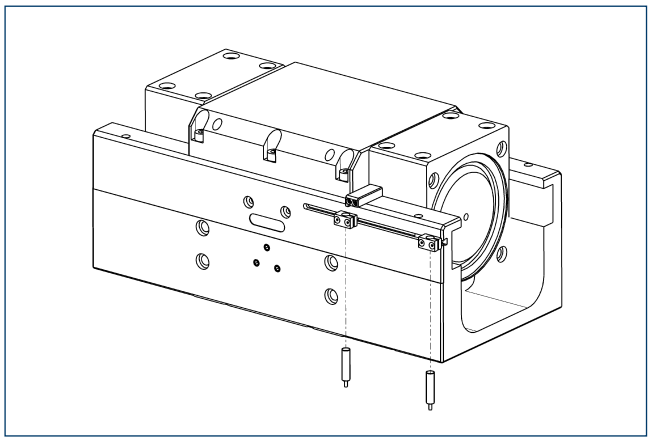

Limit position monitor can be mounted with mounting kit.

Description	ID	Often combined
Mounting kit for proximity switch		
HG-SPG 100	0300765	
Inductive proximity switches		
IN 80-S-M12	0301578	
IN 80-S-M8	0301478	●
IN-C 80-S-M8	0301475	
INK 80-S	0301550	
INK 80-SL	0301579	
Cable extensions		
KV BG12-SG12 3P-0030-PNP	0301999	
KV BG12-SG12 3P-0060-PNP	0301998	
KV BW08-SG08 3P-0030-PNP	0301495	
KV BW08-SG08 3P-0100-PNP	0301496	
KV BW08-SG08 3P-0200-PNP	0301497	●
KV BW12-SG12 3P-0030-PNP	0301595	
KV BW12-SG12 3P-0100-PNP	0301596	
KV BW12-SG12 3P-0200-PNP	0301597	
Clip for plug / socket		
CLI-M12	0301464	
CLI-M8	0301463	
Connection cables		
KA BG08-L 3P-0300-PNP	0301622	●
KA BG08-L 3P-0500-PNP	0301623	
KA BG12-L 3P-0500-PNP	30016369	
KA BW08-L 3P-0300-PNP	0301594	
KA BW08-L 3P-0500-PNP	0301502	
KA BW12-L 3P-0300-PNP	0301503	
KA BW12-L 3P-0500-PNP	0301507	
Sensor distributor		
V2-M8	0301775	●
V2-M12	0301776	●
V4-M12	0301747	
V4-M8	0301746	

ⓘ Two sensors (closer/S) are required for each unit, plus extension cables as an option. This mounting kit needs to be ordered optionally as an accessory. Please note the minimum permitted bending radii for the sensor cables, which are generally 35 mm.

MMS electronic magnetic switches

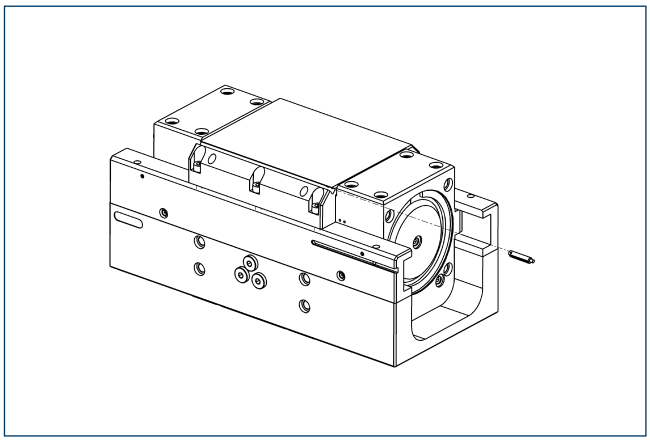

End position monitoring for mounting in the T-slot.

Description	ID	Often combined
MMS electronic magnetic switches		
MMS 30-S-M12-PNP	0301571	
MMS 30-S-M8-PNP	0301471	●
MMSK 30-S-PNP	0301563	
Cable extensions		
KV BG12-SG12 3P-0030-PNP	0301999	
KV BG12-SG12 3P-0060-PNP	0301998	
KV BW08-SG08 3P-0030-PNP	0301495	
KV BW08-SG08 3P-0100-PNP	0301496	
KV BW08-SG08 3P-0200-PNP	0301497	●
KV BW12-SG12 3P-0030-PNP	0301595	
KV BW12-SG12 3P-0100-PNP	0301596	
KV BW12-SG12 3P-0200-PNP	0301597	
Clip for plug / socket		
CLI-M12	0301464	
CLI-M8	0301463	
Connection cables		
KA BG08-L 3P-0300-PNP	0301622	●
KA BG08-L 3P-0500-PNP	0301623	
KA BG12-L 3P-0500-PNP	30016369	
KA BW08-L 3P-0300-PNP	0301594	
KA BW08-L 3P-0500-PNP	0301502	
Sensor distributor		
V2-M8	0301775	●
V4-M8	0301746	
V8-M8	0301751	

ⓘ Two sensors (closer/S) are required for each unit, plus extension cables as an option. Please note the minimum permitted bending radii for the sensor cables, which are generally 35 mm.

Superior Diversity of Variants and Accessories for ensuring the Process Reliability of your Automation Application.

3-Finger Centric Grippers

MPZ Small Components Gripper

Series	Size	Page
MPZ		718
MPZ	16	722
MPZ	20	726
MPZ	25	732

Series	Size	Page
MPZ	30	738
MPZ	38	746
MPZ	45	754

PZN-plus Universal Gripper

Series	Size	Page
PZN-plus		762
PZN-plus	40	768
PZN-plus	50	776
PZN-plus	64	786
PZN-plus	80	798
PZN-plus	100	810

Series	Size	Page
PZN-plus	125	822
PZN-plus	160	834
PZN-plus	200	846
PZN-plus	240	856
PZN-plus	300	864
PZN-plus	380	874

JGZ Universal Gripper

Series	Size	Page
JGZ		882
JGZ	40	886
JGZ	50	892
JGZ	64	900

Series	Size	Page
JGZ	80	912
JGZ	100	924
JGZ	125	936
JGZ	160	946

PZH-plus Long-stroke Gripper

Series	Size	Page
PZH-plus		956
PZH-plus	20	960
PZH-plus	30	966

Series	Size	Page
PZH-plus	50	972
PZH-plus	75	978

PZB-plus Universal Gripper

Series	Size	Page
PZB-plus		984
PZB-plus	50	988
PZB-plus	64	994
PZB-plus	80	1002
PZB-plus	100	1012

Series	Size	Page
PZB-plus	125	1022
PZB-plus	160	1032
PZB-plus	200	1042
PZB-plus	240	1052
PZB-plus	300	1060

DPZ-plus Sealed Gripper

Series	Size
DPZ-plus	
DPZ-plus	40
DPZ-plus	50
DPZ-plus	64
DPZ-plus	80

Series	Size
DPZ-plus	100
DPZ-plus	125
DPZ-plus	160
DPZ-plus	200

- For more informationen on this product please visit **www.schunk.com**.

3-Finger Centric Grippers with rotating Jaw Stroke

PZH-SF-mini Swivel Finger Gripper

Series	Size	Page
PZH-SF-mini		1068
PZH-SF-mini	125	1072

PZH-SF Swivel Finger Gripper

Series	Size	Page
PZH-SF		1078
PZH-SF	350	1082

Precise. Compact. Reliable.

MPZ Small Components Gripper

Small 3-finger centric gripper with base jaws guided on T-slots

Field of Application

For universal use in clean to slightly dirty working environments, especially suitable for gripping small workpieces

Advantages – Your benefit

T-slot guidance for precise gripping at high moment loads

Finger position monitoring also possible via FPS

Air supply via hose-free direct connection or screw connections for flexible pressure supply in all automated systems

Sizes	Weight	Gripping force	Stroke per jaw	Workpiece weight
Quantity: 6	0.01 .. 0.29 kg	20 .. 310 N	1 .. 5 mm	0.05 .. 1.15 kg

Functional Description

The piston is moved up and down by compressed air.
The angled active surfaces of the wedge-hook produce a synchronized, centric jaw movement.

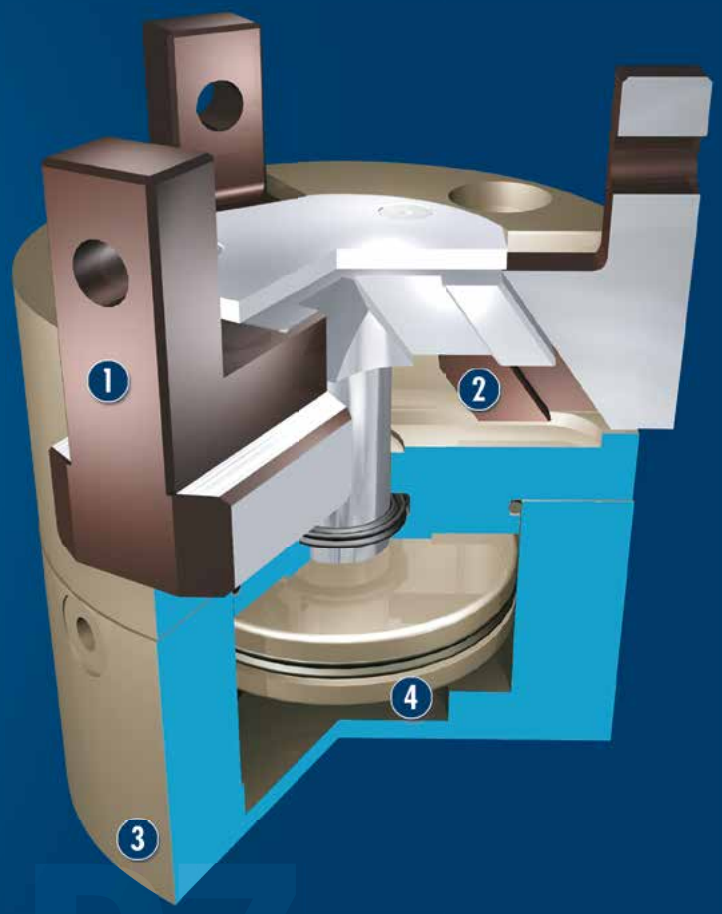

① **T-slot guidance**
for precise gripping with high moment loads

② **Wedge-hook design**
for high power transmission and centric gripping

③ **Housing**
Weight-optimized through application of high-strength aluminum alloy

④ **Drive**
Pneumatic and efficient

CAD data, operating manuals and other current product documents are available at **www.schunk.com**

General Notes about the Series

Operating principle: Wedge-hook kinematics

Housing material: Aluminum alloy, anodized

Base jaw material: Steel

Actuation: pneumatic, with filtered compressed air as per DIN ISO 8573-1: 7 4 4

Warranty: 24 months (details, general terms and conditions and operating manuals can be downloaded at www.schunk.com)

Scope of delivery: Centering sleeves, centering pins, O-rings for direct connection, assembly and operating manual with manufacturer's declaration

Gripping force maintenance device: possible with variants with mechanical maintenance of gripping force or SDV-P pressure maintenance valve

Gripping force: is the arithmetic total of the gripping force applied to each gripper jaw at distance P (see illustration).

Finger length: is measured from the upper edge of the gripper housing in the direction of the main axis. The breach of the max. permitted finger length can bring higher abrasion. The maximum permissible finger length applies up to the nominal operating pressure. With higher pressures, the finger length must be reduced proportionally to the nominal operating pressure.

Repeat accuracy: is defined as the spread of the limit position after 100 consecutive strokes.

Workpiece weight: is calculated for a force-fit connection with a coefficient of friction of 0.1 and a safety factor of 2 against slippage of the workpiece on acceleration due to gravity g. Considerably heavier workpiece weights are permitted with form-fit gripping.

Closing and opening times: are purely the times that the base jaws or fingers are in motion. Valve switching times, hose filling times or PLC reaction times are not included in the above times and must be taken into consideration when determining cycle times.

Application example

Handling device with possibility of direct mounting on a robot for screwing in plugs

1. MPZ 3-Finger Centric Gripper
2. DDF 2 Rotary Feed-through

SCHUNK offers more ...

The following components make the product MPZ even more productive – the suitable addition for the highest functionality, flexibility, reliability, and controlled production.

Centering Sleeves

Fittings

Magnetic Switches

Sensor Cables

Flexible Position Sensor

Gripper Pads

Sensor Distributor

Plastic Inserts

SDV-P Pressure Maintenance Valve

Finger Blanks

ⓘ Further information regarding the products can be found on the following product pages or at www.schunk.com. Please contact us for further information: SCHUNK technical hotline +49-7133-103-2696

Options and special Information

Gripping force maintenance version AS / IS: The mechanical gripping force maintenance version ensures a minimum gripping force also in the case of a drop in pressure. In the AS / S version this has the effect of a closing force, in the IS version of an opening force.
Small and compact 3-finger centric gripper for fast gripping applications. Monitoring of the smallest differences in stroke possible via FPS system.

MPZ 16

SCHUNK Grippers pneumatic | 3-Finger Centric Grippers | Small Components Gripper

Gripping force, O.D. gripping

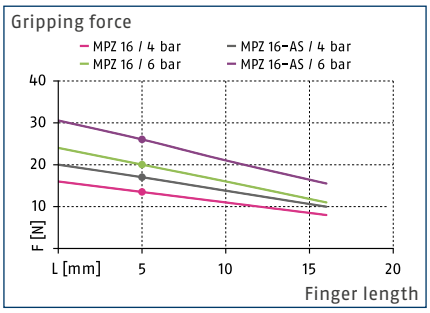

Gripping force, I.D. gripping

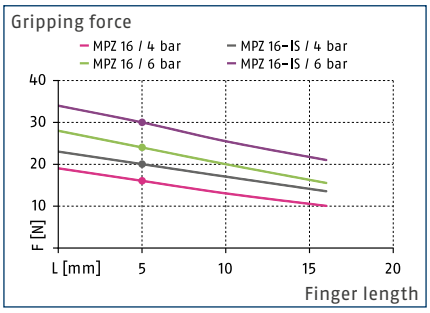

Finger load

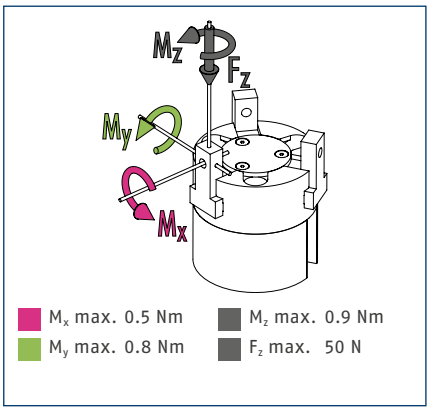

ⓘ The indicated moments and forces are static values, apply per base jaw and may occur simultaneously. M_y may arise in addition to the moment generated by the gripping force itself. If the max. permitted finger weight is exceeded, it is impreative to throttle the air supply so that the jaw movement occurs without any hitting or bouncing. Service life may be reduced.

Technical data

Description		MPZ 16	MPZ 16-AS	MPZ 16-IS
ID		0340480	0340481	0340482
Stroke per jaw	[mm]	1	1	1
Closing- / opening force	[N]	20/24	26/-	-/30
min. spring force	[N]		6	6
Weight	[kg]	0.01	0.02	0.02
Recommended workpiece weight	[kg]	0.05	0.05	0.05
Fluid consumption per double stroke	[cm³]	0.15	0.4	0.4
min. / max. operating pressure	[bar]	2/8	4/6.5	4/6.5
Nominal operating pressure	[bar]	6	6	6
Closing- / opening time	[s]	0.02/0.02	0.02/0.04	0.04/0.02
Closing- / opening time only with spring	[s]		0.20	0.20
max. permitted finger length	[mm]	16	16	16
max. permitted weight per finger	[kg]	0.02	0.02	0.02
IP class		40	40	40
min. / max. ambient temperature	[°C]	5/90	5/90	5/90
Repeat accuracy	[mm]	0.01	0.01	0.01
Cleanroom class ISO 14644-1		5	5	5

Main view

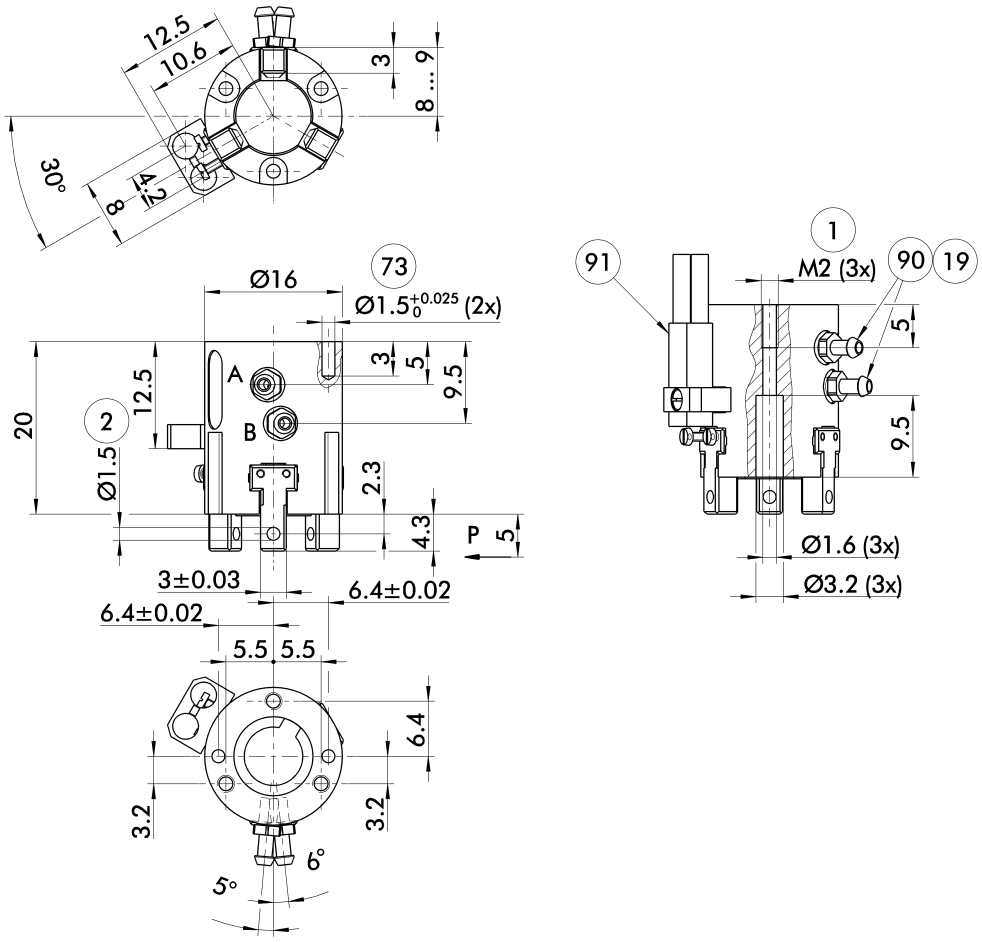

The drawing shows the gripper in the basic version with closed jaws, without dimensional consideration of the options described below.

ⓘ The SDV-P pressure maintenance valve can also be used for I.D. or O.D. gripping alternatively or in addition to the spring-loaded, mechanical gripping force maintenance device (see catalog section on "Accessories").

A, a Main / direct connection, gripper opening

B, b Main / direct connection, gripper closing

(1) Gripper connection

(2) Finger connection

(19) Air connection

(73) Fit for centering pins

(90) Bosch-Rexroth compressed air hose, TU1-S (Ø 3.0 – 0.6) series, Order no.: 1820712066 (-67/-68/-69)

(91) IN ... sensor

Gripping force maintenance device AS / IS

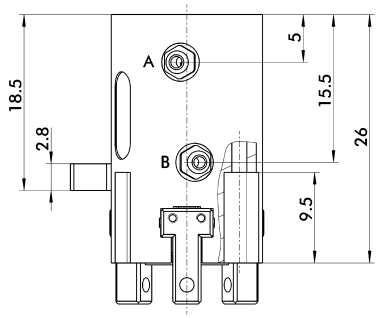

The mechanical maintenance of gripping force also assures a minimum gripping force in the case of a loss of pressure. With the AS / S variant, this acts as a closing force, and as an opening force for the IS variant. The maintenance of gripping force element can also be used as a means for increasing gripping force or for single actuated gripping.

Inductive proximity switches

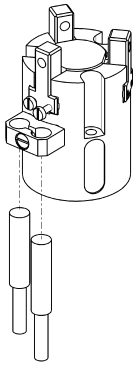

Directly mounted limit position monitor.

Description	ID	Often combined
Inductive proximity switches		
IN 3-S-M8-PNP	0301466	
Cable extensions		
KV BW08-SG08 3P-0030-PNP	0301495	
KV BW08-SG08 3P-0100-PNP	0301496	
KV BW08-SG08 3P-0200-PNP	0301497	●
Clip for plug / socket		
CLI-M8	0301463	
Connection cables		
KA BG08-L 3P-0300-PNP	0301622	●
KA BG08-L 3P-0500-PNP	0301623	
KA BW08-L 3P-0300-PNP	0301594	
KA BW08-L 3P-0500-PNP	0301502	
Sensor distributor		
V2-M8	0301775	●
V4-M8	0301746	

SDV-P pressure maintenance valve

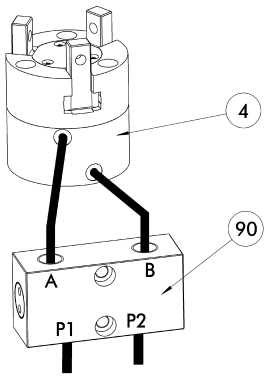

4 Gripper

90 SDV-P pressure maintenance valve

The SDV-P pressure maintenance valves ensure that the pressure in the piston chamber of pneumatic gripping, rotary, linear, and quick-change modules is maintained temporarily during an emergency stop.

Description	ID	
Pressure maintenance valve		
SDV-P 04	0403130	

MPZ 20

SCHUNK Grippers pneumatic | 3-Finger Centric Grippers | Small Components Gripper

Gripping force, O.D. gripping

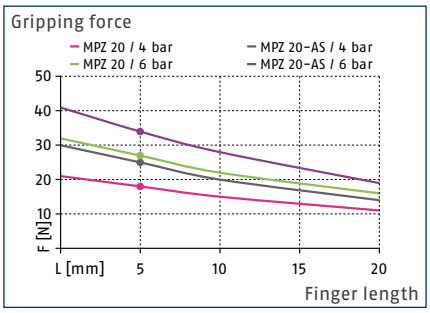

Gripping force, I.D. gripping

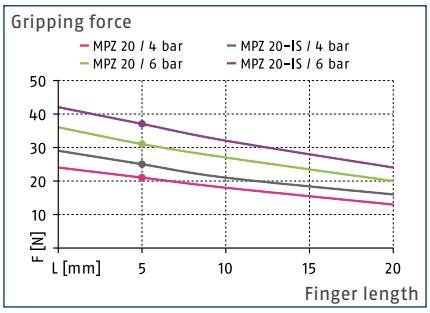

Finger load

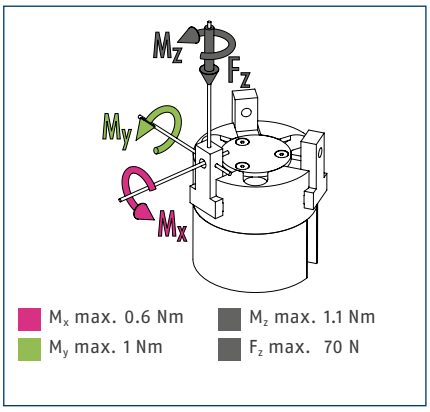

ⓘ The indicated moments and forces are static values, apply per base jaw and may occur simultaneously. M_y may arise in addition to the moment generated by the gripping force itself. If the max. permitted finger weight is exceeded, it is impreative to throttle the air supply so that the jaw movement occurs without any hitting or bouncing. Service life may be reduced.

Technical data

Description		MPZ 20	MPZ 20-AS	MPZ 20-IS
ID		0340490	0340491	0340492
Stroke per jaw	[mm]	1.5	1.5	1.5
Closing- / opening force	[N]	26/30	34/-	-/38
min. spring force	[N]		8	8
Weight	[kg]	0.02	0.03	0.03
Recommended workpiece weight	[kg]	0.1	0.1	0.1
Fluid consumption per double stroke	[cm³]	0.3	0.7	0.7
min. / max. operating pressure	[bar]	2/8	4/6.5	4/6.5
Nominal operating pressure	[bar]	6	6	6
Closing- / opening time	[s]	0.02/0.02	0.02/0.04	0.04/0.02
Closing- / opening time only with spring	[s]		0.20	0.20
max. permitted finger length	[mm]	20	20	20
max. permitted weight per finger	[kg]	0.03	0.03	0.03
IP class		40	40	40
min. / max. ambient temperature	[°C]	5/90	5/90	5/90
Repeat accuracy	[mm]	0.01	0.01	0.01
Cleanroom class ISO 14644-1		5	5	5

Main view

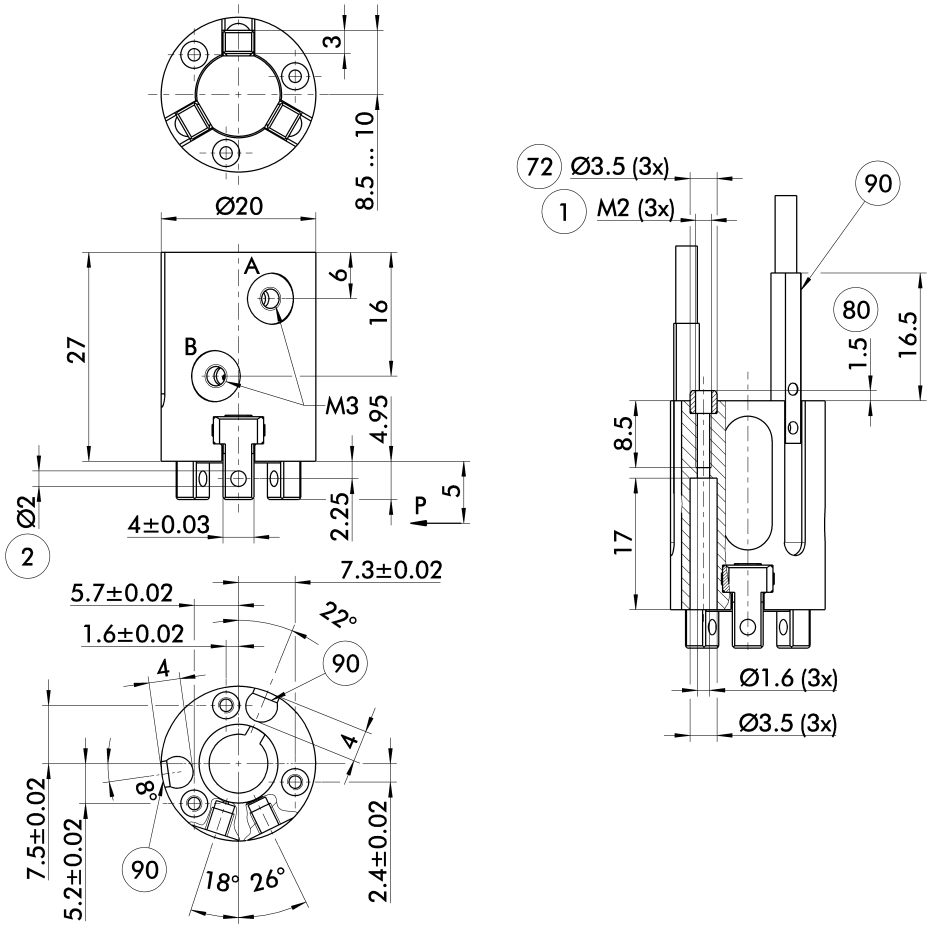

The drawing shows the gripper in the basic version with closed jaws, without dimensional consideration of the options described below.

ⓘ The SDV-P pressure maintenance valve can also be used for I.D. or O.D. gripping alternatively or in addition to the spring-loaded, mechanical gripping force maintenance device (see catalog section on "Accessories").

A, a Main / direct connection, gripper opening

B, b Main / direct connection, gripper closing

(1) Gripper connection

(2) Finger connection

(72) Fit for centering sleeves

(80) Depth of the centering sleeve hole in the mating part

(90) MMS 22... sensor

Gripping force maintenance device AS / IS

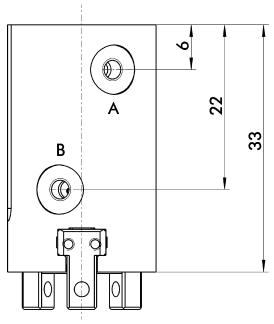

The mechanical maintenance of gripping force also assures a minimum gripping force in the case of a loss of pressure. With the AS / S variant, this acts as a closing force, and as an opening force for the IS variant. The maintenance of gripping force element can also be used as a means for increasing gripping force or for single actuated gripping.

SDV-P pressure maintenance valve

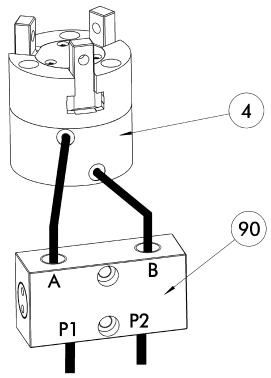

4 Gripper

90 SDV-P pressure maintenance valve

The SDV-P pressure maintenance valves ensure that the pressure in the piston chamber of pneumatic gripping, rotary, linear, and quick-change modules is maintained temporarily during an emergency stop.

Description	ID	
Pressure maintenance valve		
SDV-P 04	0403130	

MMS electronic magnetic switches

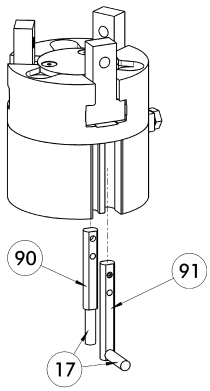

(17) Cable outlet
(91) MMS 22...-SA sensor
(90) MMS 22... sensor

End position monitoring for mounting in the C-slot.

Description	ID	Often combined
MMS electronic magnetic switches		
MMS 22-S-M8-PNP	0301032	●
MMSK 22-S-PNP	0301034	
MMS electronic magnetic switches with lateral cable outlet		
MMS 22-S-M8-PNP-SA	0301042	●
MMSK 22-S-PNP-SA	0301044	
Cable extensions		
KV BW08-SG08 3P-0030-PNP	0301495	
KV BW08-SG08 3P-0100-PNP	0301496	
KV BW08-SG08 3P-0200-PNP	0301497	●
Clip for plug / socket		
CLI-M8	0301463	
Connection cables		
KA BG08-L 3P-0300-PNP	0301622	●
KA BG08-L 3P-0500-PNP	0301623	
KA BW08-L 3P-0300-PNP	0301594	
KA BW08-L 3P-0500-PNP	0301502	
Sensor distributor		
V2-M8	0301775	●
V4-M8	0301746	
V8-M8	0301751	

ⓘ Two sensors (closer/S) are required for each unit, plus extension cables as an option. Please note the minimum permitted bending radii for the sensor cables, which are generally 35 mm.

MMS PI1 programmable magnetic switches

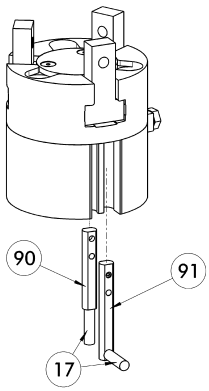

(17) Cable outlet
(91) MMS 22...-PI1-...-SA sensor
(90) MMS 22...-PI1-... sensor

Position query with one programmable position per sensor and electronics integrated in sensor. Programmable via MT magnet teaching tool (included in the scope of delivery) or ST plug teaching tool (optional). Limit position query mounted in C-groove. If the ST plug teaching tools are listed in the table, teaching can only take place with the ST plug teaching tools.

Description	ID	Often combined
MMS PI1 programmable magnetic switches		
MMS 22-PI1-S-M8-PNP	0301160	●
MMSK 22-PI1-S-PNP	0301162	
MMS PI1-HD programmable magnetic switches with stainless steel housing		
MMS 22-PI1-S-M8-PNP-HD	0301110	●
MMSK 22-PI1-S-PNP-HD	0301112	
MMS PI1 programmable magnetic switches with lateral cable outlet		
MMS 22-PI1-S-M8-PNP-SA	0301166	●
MMSK 22-PI1-S-PNP-SA	0301168	

ⓘ Two sensors (closer/S) are required for each unit, plus extension cables as an option. Please note the minimum permitted bending radii for the sensor cables, which are generally 35 mm. Connection cable, cable extensions, and sensor distributors can be found in the table for the MMS 22.

MMS PI2 programmable magnetic switches

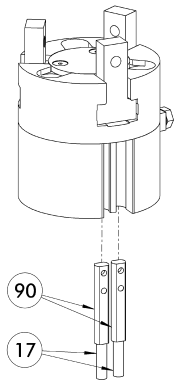

17 Cable outlet

90 MMS 22...-PI2-... sensor

Position query with two programmable positions per sensor and electronics integrated in sensor. Programmable via MT magnet teaching tool (included in the scope of delivery) or ST plug teaching tool (optional). Limit position query mounted in C-groove. If the ST plug teaching tools are listed in the table, teaching can only take place with the ST plug teaching tools.

Description	ID	Often combined
MMS PI2 programmable magnetic switches		
MMS 22-PI2-S-M8-PNP	0301180	●
MMSK 22-PI2-S-PNP	0301182	
MMS PI2-HD programmable magnetic switches with stainless steel housing		
MMS 22-PI2-S-M8-PNP-HD	0301130	●
MMSK 22-PI2-S-PNP-HD	0301132	

ⓘ Per unit one sensor (closer/S) is required, optionally a cable extension. Please note the minimum permitted bending radii for the sensor cables, which are generally 35 mm. Connection cable, cable extensions, and sensor distributors can be found in the table for the MMS-P 22.

MMS-P programmable magnetic switches

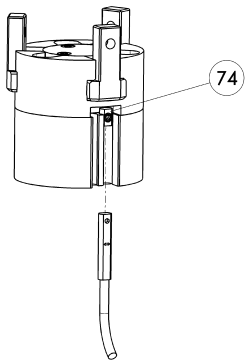

74 Stop for MMS-P

Position monitoring with two programmable positions per sensor. The end position monitoring is mounted in the C-slot.

Description	ID	Often combined
MMS-P programmable magnetic switches		
MMSK-P 22-S-PNP	0301371	
MMS-P 22-S-M8-PNP	0301370	●
Clip for plug / socket		
CLI-M8	0301463	
Connection cables		
KA BG08-L 4P-0500	0307767	●
KA BG08-L 4P-1000	0307768	
KA BW08-L 4P-0500	0307765	
KA BW08-L 4P-1000	0307766	
Sensor distributor		
V2-M8-4P-2XM8-3P	0301380	

ⓘ Per unit one sensor (closer/S) is required, optionally a cable extension. Please note the minimum permitted bending radii for the sensor cables, which are generally 35 mm.

MPZ 25

SCHUNK Grippers pneumatic | 3-Finger Centric Grippers | Small Components Gripper

Gripping force, O.D. gripping

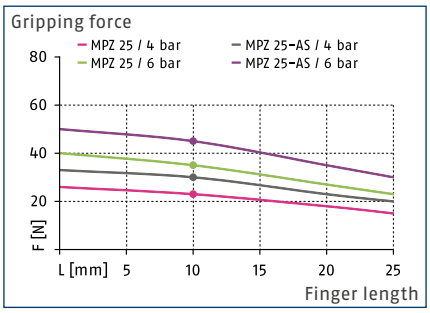

Gripping force, I.D. gripping

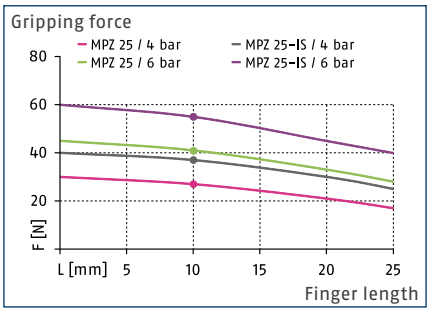

Finger load

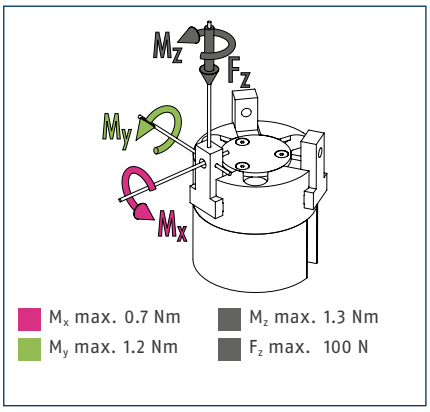

ⓘ The indicated moments and forces are static values, apply per base jaw and may occur simultaneously. M_y may arise in addition to the moment generated by the gripping force itself. If the max. permitted finger weight is exceeded, it is impreative to throttle the air supply so that the jaw movement occurs without any hitting or bouncing. Service life may be reduced.

Technical data

Description		MPZ 25	MPZ 25-AS	MPZ 25-IS
ID		0340500	0340501	0340502
Stroke per jaw	[mm]	2	2	2
Closing- / opening force	[N]	35/40	47/-	-/55
min. spring force	[N]		12	15
Weight	[kg]	0.04	0.06	0.06
Recommended workpiece weight	[kg]	0.2	0.2	0.2
Fluid consumption per double stroke	[cm³]	0.6	1.8	1.8
min. / max. operating pressure	[bar]	2/8	4/6.5	4/6.5
Nominal operating pressure	[bar]	6	6	6
Closing- / opening time	[s]	0.02/0.02	0.02/0.04	0.04/0.02
Closing- / opening time only with spring	[s]		0.20	0.20
max. permitted finger length	[mm]	25	25	25
max. permitted weight per finger	[kg]	0.03	0.03	0.03
IP class		40	40	40
min. / max. ambient temperature	[°C]	5/90	5/90	5/90
Repeat accuracy	[mm]	0.01	0.01	0.01
Cleanroom class ISO 14644-1		5	5	5

Main view

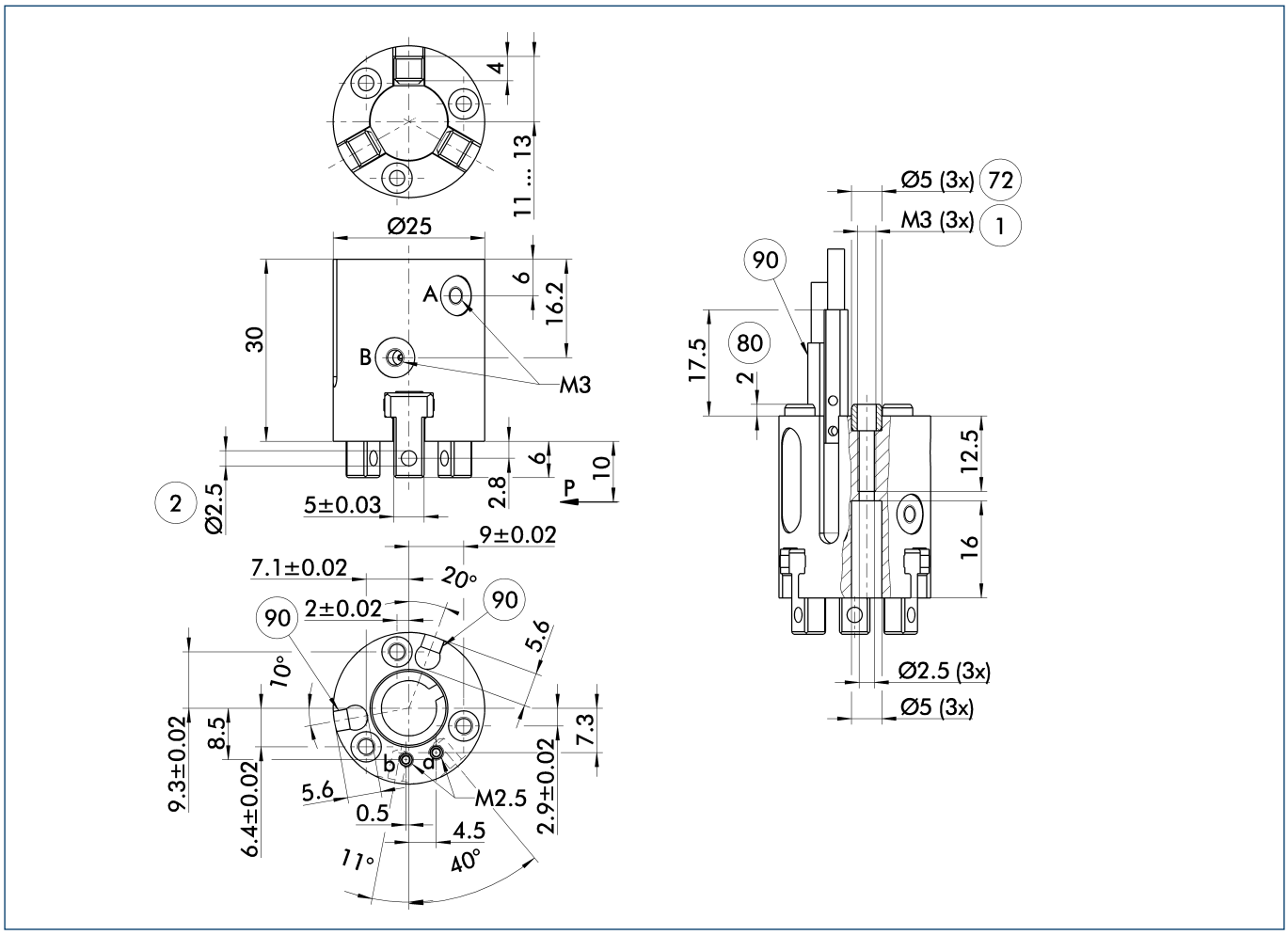

The drawing shows the gripper in the basic version with closed jaws, without dimensional consideration of the options described below.

ⓘ The SDV-P pressure maintenance valve can also be used for I.D. or O.D. gripping alternatively or in addition to the spring-loaded, mechanical gripping force maintenance device (see catalog section on "Accessories").

A, a Main / direct connection, gripper opening

B, b Main / direct connection, gripper closing

(1) Gripper connection

(2) Finger connection

(72) Fit for centering sleeves

(80) Depth of the centering sleeve hole in the mating part

(90) MMS 22... sensor

Hose-free direct connection M2.5

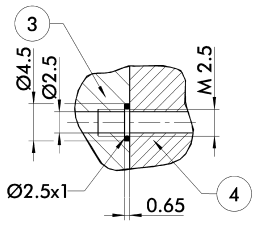

3 Adapter

4 Gripper

The direct connection is used for supplying compressed air without hoses. Instead, the pressure medium is fed through bore-holes in the mounting plate.

Gripping force maintenance device AS / IS

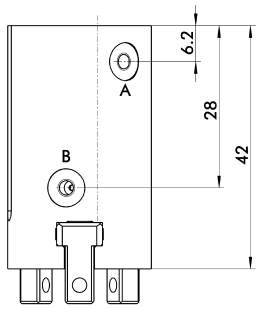

The mechanical maintenance of gripping force also assures a minimum gripping force in the case of a loss of pressure. With the AS / S variant, this acts as a closing force, and as an opening force for the IS variant. The maintenance of gripping force element can also be used as a means for increasing gripping force or for single actuated gripping.

SDV-P pressure maintenance valve

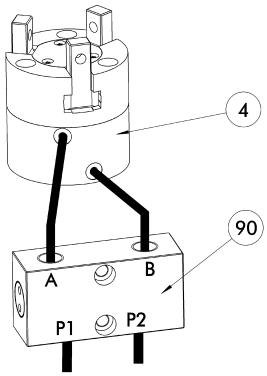

4 Gripper

90 SDV-P pressure maintenance valve

The SDV-P pressure maintenance valves ensure that the pressure in the piston chamber of pneumatic gripping, rotary, linear, and quick-change modules is maintained temporarily during an emergency stop.

Description	ID	
Pressure maintenance valve		
SDV-P 04	0403130	

MMS electronic magnetic switches

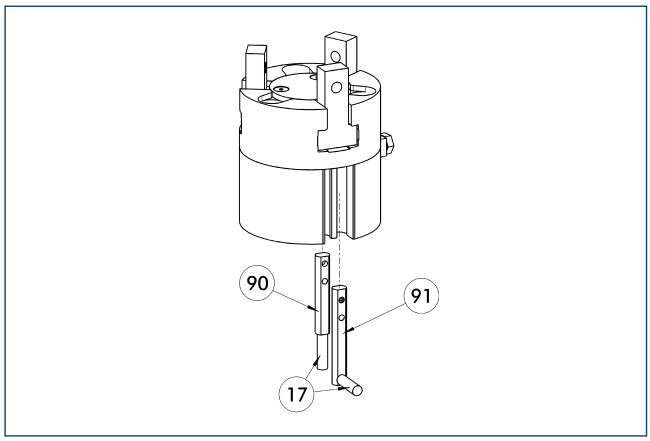

17 Cable outlet
91 MMS 22...-SA sensor
90 MMS 22... sensor

End position monitoring for mounting in the C-slot.

Description	ID	Often combined
MMS electronic magnetic switches		
MMS 22-S-M8-PNP	0301032	●
MMSK 22-S-PNP	0301034	
MMS electronic magnetic switches with lateral cable outlet		
MMS 22-S-M8-PNP-SA	0301042	●
MMSK 22-S-PNP-SA	0301044	
Cable extensions		
KV BW08-SG08 3P-0030-PNP	0301495	
KV BW08-SG08 3P-0100-PNP	0301496	
KV BW08-SG08 3P-0200-PNP	0301497	●
Clip for plug / socket		
CLI-M8	0301463	
Connection cables		
KA BG08-L 3P-0300-PNP	0301622	●
KA BG08-L 3P-0500-PNP	0301623	
KA BW08-L 3P-0300-PNP	0301594	
KA BW08-L 3P-0500-PNP	0301502	
Sensor distributor		
V2-M8	0301775	●
V4-M8	0301746	
V8-M8	0301751	

ⓘ Two sensors (closer/S) are required for each unit, plus extension cables as an option. Please note the minimum permitted bending radii for the sensor cables, which are generally 35 mm.

MMS PI1 programmable magnetic switches

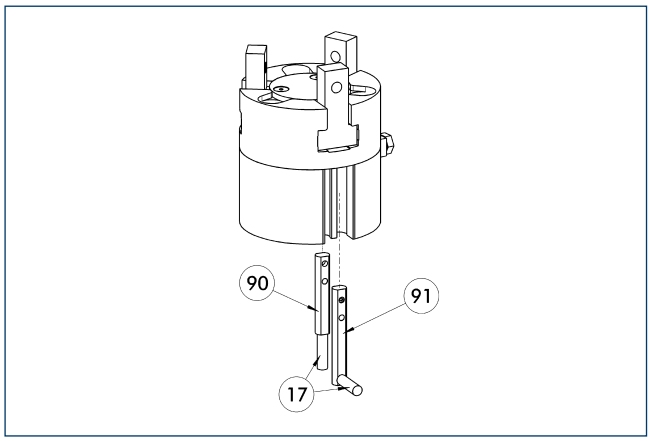

(17) Cable outlet
(91) MMS 22...-PI1-...-SA sensor
(90) MMS 22...-PI1-... sensor

Position query with one programmable position per sensor and electronics integrated in sensor. Programmable via MT magnet teaching tool (included in the scope of delivery) or ST plug teaching tool (optional). Limit position query mounted in C-groove. If the ST plug teaching tools are listed in the table, teaching can only take place with the ST plug teaching tools.

Description	ID	Often combined
MMS PI1 programmable magnetic switches		
MMS 22-PI1-S-M8-PNP	0301160	●
MMSK 22-PI1-S-PNP	0301162	
MMS PI1-HD programmable magnetic switches with stainless steel housing		
MMS 22-PI1-S-M8-PNP-HD	0301110	●
MMSK 22-PI1-S-PNP-HD	0301112	
MMS PI1 programmable magnetic switches with lateral cable outlet		
MMS 22-PI1-S-M8-PNP-SA	0301166	●
MMSK 22-PI1-S-PNP-SA	0301168	

ⓘ Two sensors (closer/S) are required for each unit, plus extension cables as an option. Please note the minimum permitted bending radii for the sensor cables, which are generally 35 mm. Connection cable, cable extensions, and sensor distributors can be found in the table for the MMS 22.

MMS PI2 programmable magnetic switches

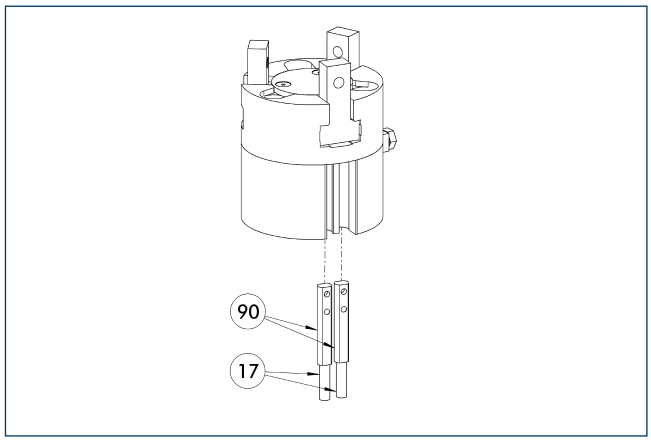

(17) Cable outlet
(90) MMS 22...-PI2-... sensor

Position query with two programmable positions per sensor and electronics integrated in sensor. Programmable via MT magnet teaching tool (included in the scope of delivery) or ST plug teaching tool (optional). Limit position query mounted in C-groove. If the ST plug teaching tools are listed in the table, teaching can only take place with the ST plug teaching tools.

Description	ID	Often combined
MMS PI2 programmable magnetic switches		
MMS 22-PI2-S-M8-PNP	0301180	●
MMSK 22-PI2-S-PNP	0301182	
MMS PI2-HD programmable magnetic switches with stainless steel housing		
MMS 22-PI2-S-M8-PNP-HD	0301130	●
MMSK 22-PI2-S-PNP-HD	0301132	

ⓘ Per unit one sensor (closer/S) is required, optionally a cable extension. Please note the minimum permitted bending radii for the sensor cables, which are generally 35 mm. Connection cable, cable extensions, and sensor distributors can be found in the table for the MMS-P 22.

MMS-P programmable magnetic switches

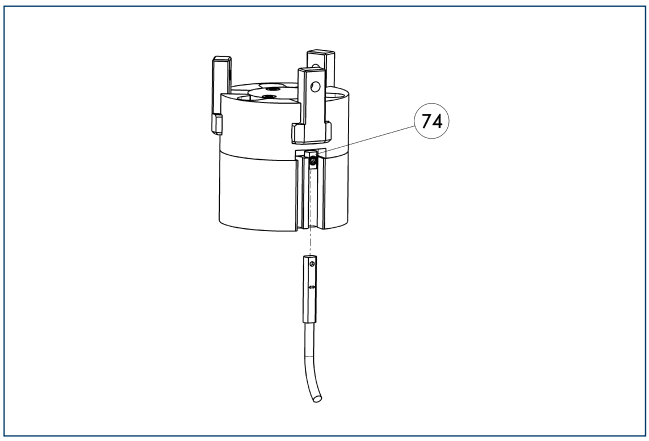

74 Stop for MMS-P

Position monitoring with two programmable positions per sensor. The end position monitoring is mounted in the C-slot.

Description	ID	Often combined
MMS-P programmable magnetic switches		
MMSK-P 22-S-PNP	0301371	
MMS-P 22-S-M8-PNP	0301370	●
Clip for plug / socket		
CLI-M8	0301463	
Connection cables		
KA BG08-L 4P-0500	0307767	●
KA BG08-L 4P-1000	0307768	
KA BW08-L 4P-0500	0307765	
KA BW08-L 4P-1000	0307766	
Sensor distributor		
V2-M8-4P-2XM8-3P	0301380	

ⓘ Per unit one sensor (closer/S) is required, optionally a cable extension. Please note the minimum permitted bending radii for the sensor cables, which are generally 35 mm.

MPZ 30

SCHUNK Grippers pneumatic | 3-Finger Centric Grippers | Small Components Gripper

Gripping force, O.D. gripping

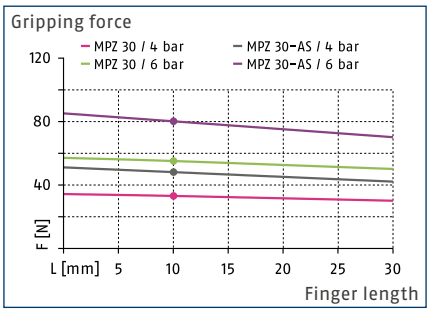

Gripping force, I.D. gripping

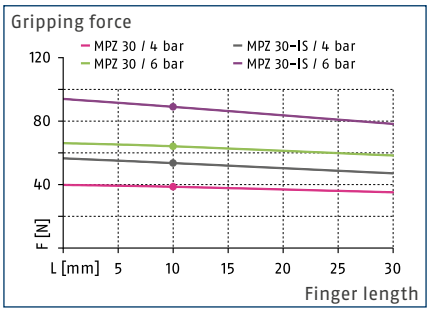

Finger load

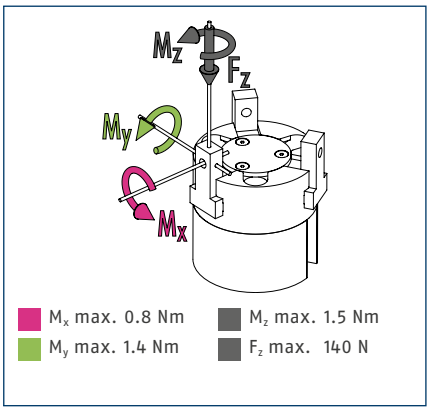

ⓘ The indicated moments and forces are static values, apply per base jaw and may occur simultaneously. M_y may arise in addition to the moment generated by the gripping force itself. If the max. permitted finger weight is exceeded, it is impreative to throttle the air supply so that the jaw movement occurs without any hitting or bouncing. Service life may be reduced.

Technical data

Description		MPZ 30	MPZ 30 FPS	MPZ 30-AS	MPZ 30-IS
ID		0340510	0340513	0340511	0340512
Stroke per jaw	[mm]	3	3	3	3
Closing- / opening force	[N]	55/65	55/65	80/-	-/90
min. spring force	[N]			25	25
Weight	[kg]	0.08	0.1	0.09	0.09
Recommended workpiece weight	[kg]	0.28	0.28	0.28	0.28
Fluid consumption per double stroke	[cm³]	1.8	1.8	4.2	3.2
min. / max. operating pressure	[bar]	2/8	2/8	4/6.5	4/6.5
Nominal operating pressure	[bar]	6	6	6	6
Closing- / opening time	[s]	0.02/0.02	0.02/0.02	0.02/0.04	0.04/0.02
Closing- / opening time only with spring	[s]			0.30	0.30
max. permitted finger length	[mm]	30	30	30	30
max. permitted weight per finger	[kg]	0.03	0.03	0.03	0.03
IP class		40	40	40	40
min. / max. ambient temperature	[°C]	5/90	5/90	5/90	5/90
Repeat accuracy	[mm]	0.01	0.01	0.01	0.01
Cleanroom class ISO 14644-1		5	5	5	5

Main view

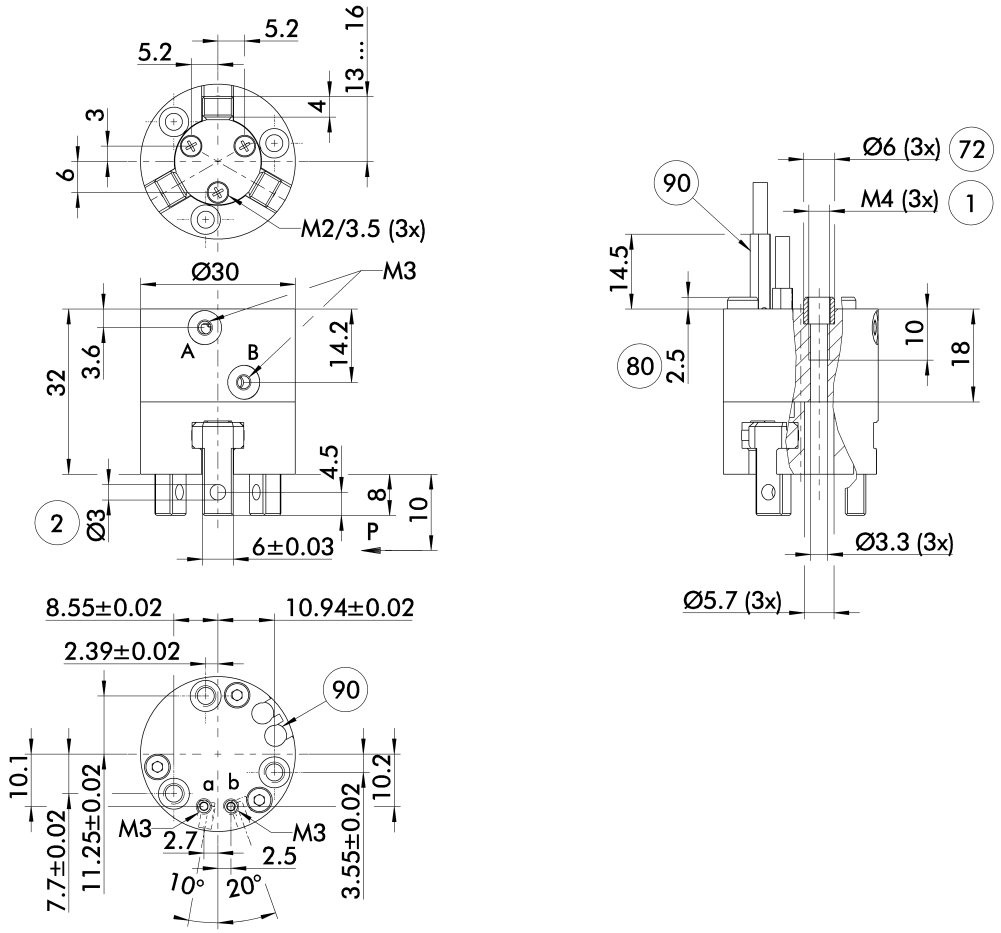

The drawing shows the gripper in the basic version with closed jaws, without dimensional consideration of the options described below.

ⓘ The SDV-P pressure maintenance valve can also be used for I.D. or O.D. gripping alternatively or in addition to the spring-loaded, mechanical gripping force maintenance device (see catalog section on "Accessories").

A, a Main / direct connection, gripper opening

B, b Main / direct connection, gripper closing

(1) Gripper connection

(2) Finger connection

(72) Fit for centering sleeves

(80) Depth of the centering sleeve hole in the mating part

(90) MMS 22... sensor

Hose-free direct connection M3

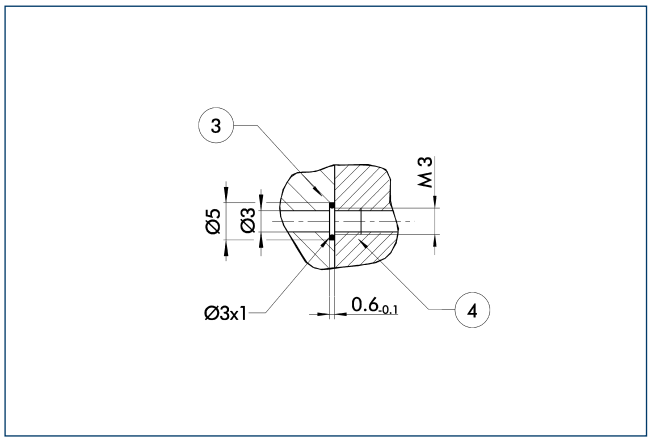

(3) Adapter (4) Gripper

The direct connection is used for supplying compressed air without hoses. Instead, the pressure medium is fed through bore-holes in the mounting plate.

Gripping force maintenance device AS / IS

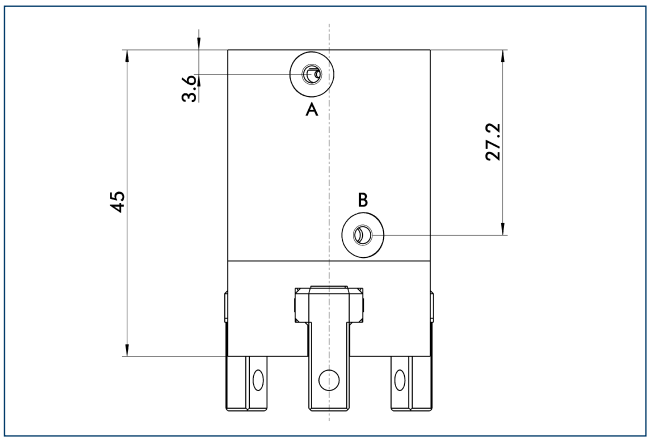

The mechanical maintenance of gripping force also assures a minimum gripping force in the case of a loss of pressure. With the AS / S variant, this acts as a closing force, and as an opening force for the IS variant. The maintenance of gripping force element can also be used as a means for increasing gripping force or for single actuated gripping.

Flexible position sensor

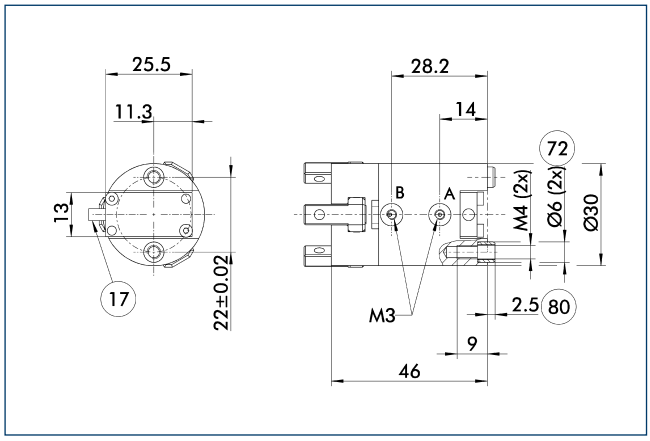

(17) Cable outlet
(72) Fit for centering sleeves
(80) Depth of the centering sleeve hole in the mating part

The following FPS position sensor can differentiate between five programmable areas and/or switching points for the stroke of a gripper, and can be used in combination with a PC as a measuring system.

SDV-P pressure maintenance valve

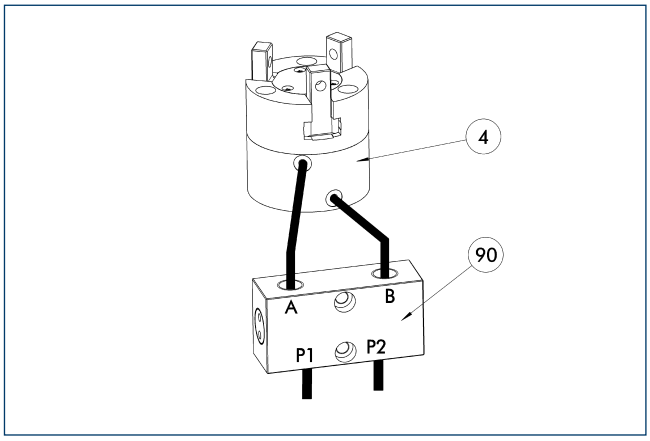

(4) Gripper (90) SDV-P pressure maintenance valve

The SDV-P pressure maintenance valves ensure that the pressure in the piston chamber of pneumatic gripping, rotary, linear, and quick-change modules is maintained temporarily during an emergency stop.

Description	ID	
Pressure maintenance valve		
SDV-P 04	0403130	

ABR-MPZ 30 finger blanks

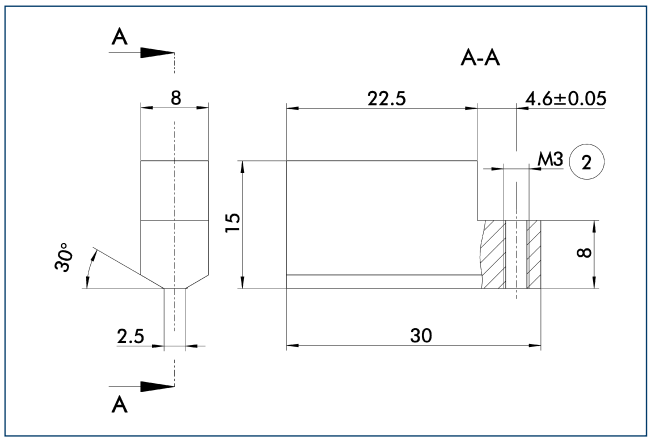

(2) Finger connection

Finger blanks for customized subsequent machining.

Description	ID	Material	Scope of delivery
Finger blanks			
ABR-MPZ 30	0340519	Aluminum	3

Modular assembly automation

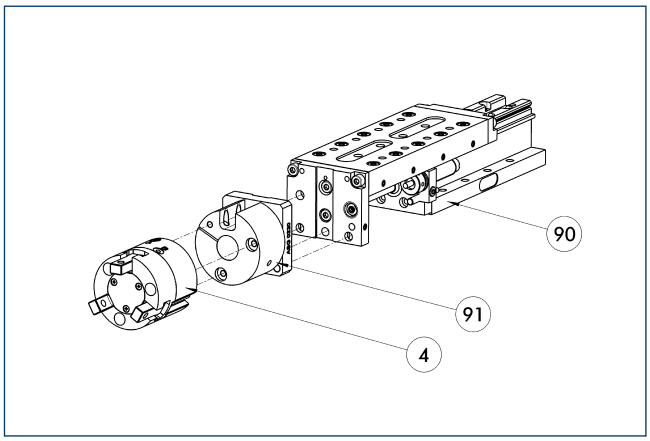

(4) Gripper
(91) ASG adapter plate
(90) CLM / KLM / LM / ELM / ELS / HLM linear module

Gripper and linear modules can be combined with standard adapters out of the modular assembly system. For more information see our catalog "Modular Assembly Automation".

Flexible position sensor

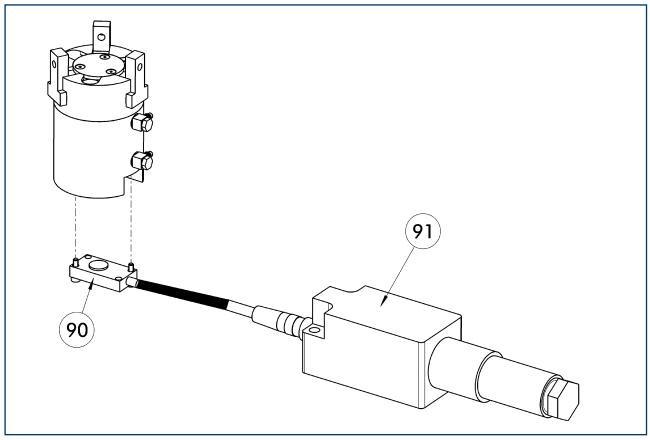

(90) FPS-S sensor
(91) FPS-F5 / -F5 T electronic processor

Flexible position monitoring of up to five positions.

Description	ID	Often combined
Sensor		
FPS-S 13	0301705	
Electronic processor		
FPS-F5	0301805	●
FPS-F5 T	0301807	

ⓘ When using a FPS system, a FPS sensor (FPS-S) and a control unit (FPS-F5 / F5 T) are required for each gripper as well as a mounting kit (AS), if listed. Cable extensions (KV) are available as options in the "Accessories" catalog section.

MMS electronic magnetic switches

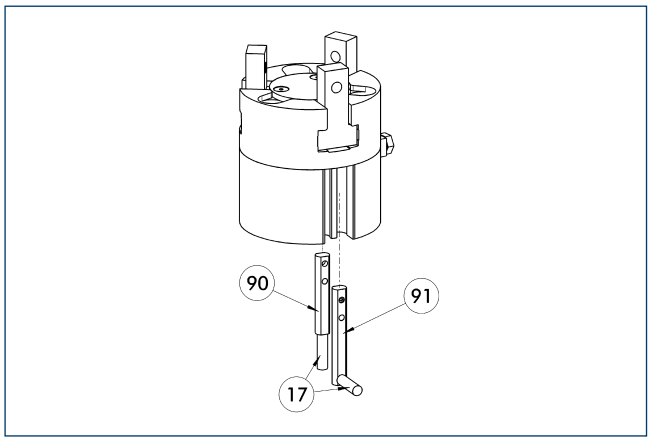

17 Cable outlet
91 MMS 22...-SA sensor
90 MMS 22... sensor

End position monitoring for mounting in the C-slot.

Description	ID	Often combined
MMS electronic magnetic switches		
MMS 22-S-M8-PNP	0301032	●
MMSK 22-S-PNP	0301034	
MMS electronic magnetic switches with lateral cable outlet		
MMS 22-S-M8-PNP-SA	0301042	●
MMSK 22-S-PNP-SA	0301044	
Reed switches		
RMS 22-S-M8	0377720	●
Cable extensions		
KV BW08-SG08 3P-0030-PNP	0301495	
KV BW08-SG08 3P-0100-PNP	0301496	
KV BW08-SG08 3P-0200-PNP	0301497	●
Clip for plug / socket		
CLI-M8	0301463	
Connection cables		
KA BG08-L 3P-0300-PNP	0301622	●
KA BG08-L 3P-0500-PNP	0301623	
KA BW08-L 3P-0300-PNP	0301594	
KA BW08-L 3P-0500-PNP	0301502	
RSS radio sensor system		
RSS-T2	0377710	
Sensor distributor		
V2-M8	0301775	●
V4-M8	0301746	
V8-M8	0301751	

ⓘ Two sensors (closer/S) are required for each unit, plus extension cables as an option. Please note the minimum permitted bending radii for the sensor cables, which are generally 35 mm.

MMS PI1 programmable magnetic switches

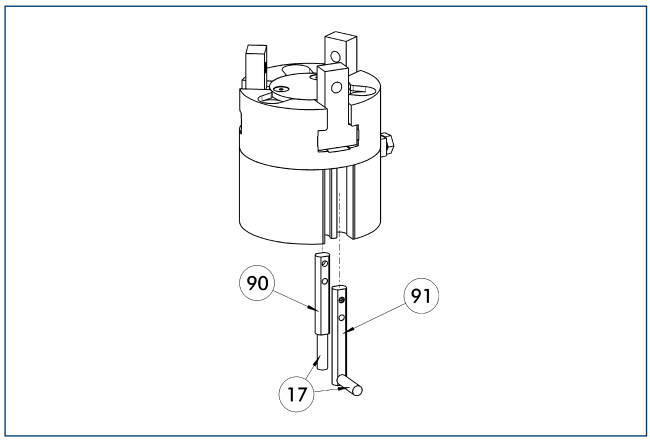

(17) Cable outlet
(91) MMS 22...-PI1-...-SA sensor
(90) MMS 22...-PI1-... sensor

Position query with one programmable position per sensor and electronics integrated in sensor. Programmable via MT magnet teaching tool (included in the scope of delivery) or ST plug teaching tool (optional). Limit position query mounted in C-groove. If the ST plug teaching tools are listed in the table, teaching can only take place with the ST plug teaching tools.

Description	ID	Often combined
MMS PI1 programmable magnetic switches		
MMS 22-PI1-S-M8-PNP	0301160	●
MMSK 22-PI1-S-PNP	0301162	
MMS PI1-HD programmable magnetic switches with stainless steel housing		
MMS 22-PI1-S-M8-PNP-HD	0301110	●
MMSK 22-PI1-S-PNP-HD	0301112	
MMS PI1 programmable magnetic switches with lateral cable outlet		
MMS 22-PI1-S-M8-PNP-SA	0301166	●
MMSK 22-PI1-S-PNP-SA	0301168	

ⓘ Two sensors (closer/S) are required for each unit, plus extension cables as an option. Please note the minimum permitted bending radii for the sensor cables, which are generally 35 mm. Connection cable, cable extensions, and sensor distributors can be found in the table for the MMS 22.

MMS PI2 programmable magnetic switches

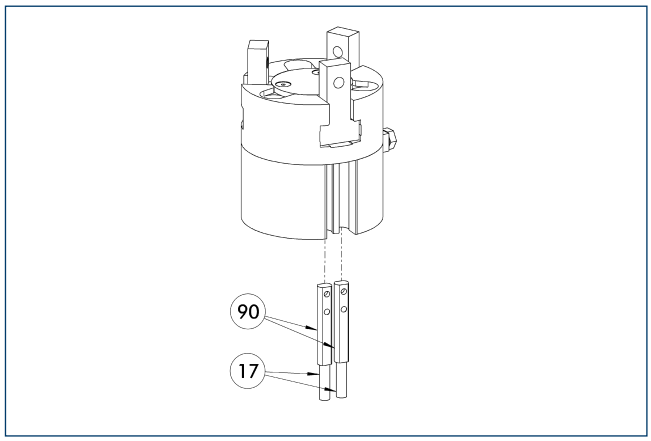

(17) Cable outlet
(90) MMS 22...-PI2-... sensor

Position query with two programmable positions per sensor and electronics integrated in sensor. Programmable via MT magnet teaching tool (included in the scope of delivery) or ST plug teaching tool (optional). Limit position query mounted in C-groove. If the ST plug teaching tools are listed in the table, teaching can only take place with the ST plug teaching tools.

Description	ID	Often combined
MMS PI2 programmable magnetic switches		
MMS 22-PI2-S-M8-PNP	0301180	●
MMSK 22-PI2-S-PNP	0301182	
MMS PI2-HD programmable magnetic switches with stainless steel housing		
MMS 22-PI2-S-M8-PNP-HD	0301130	●
MMSK 22-PI2-S-PNP-HD	0301132	

ⓘ Per unit one sensor (closer/S) is required, optionally a cable extension. Please note the minimum permitted bending radii for the sensor cables, which are generally 35 mm. Connection cable, cable extensions, and sensor distributors can be found in the table for the MMS-P 22.

MMS-P programmable magnetic switches

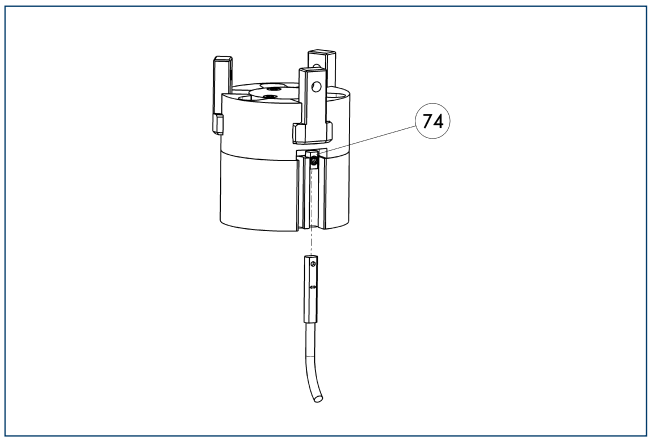

74 Stop for MMS-P

Position monitoring with two programmable positions per sensor. The end position monitoring is mounted in the C-slot.

Description	ID	Often combined
MMS-P programmable magnetic switches		
MMSK-P 22-S-PNP	0301371	
MMS-P 22-S-M8-PNP	0301370	●
Clip for plug / socket		
CLI-M8	0301463	
Connection cables		
KA BG08-L 4P-0500	0307767	●
KA BG08-L 4P-1000	0307768	
KA BW08-L 4P-0500	0307765	
KA BW08-L 4P-1000	0307766	
Sensor distributor		
V2-M8-4P-2XM8-3P	0301380	

ⓘ Per unit one sensor (closer/S) is required, optionally a cable extension. Please note the minimum permitted bending radii for the sensor cables, which are generally 35 mm.

MPZ 38

SCHUNK Grippers pneumatic | 3-Finger Centric Grippers | Small Components Gripper

Gripping force, O.D. gripping

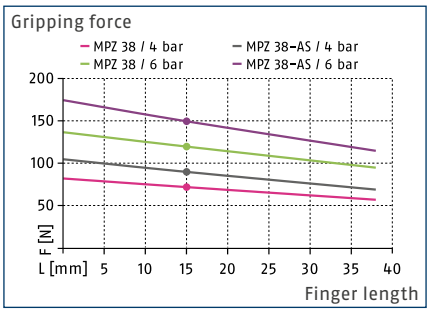

Gripping force, I.D. gripping

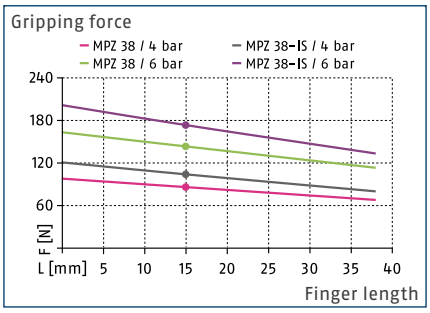

Finger load

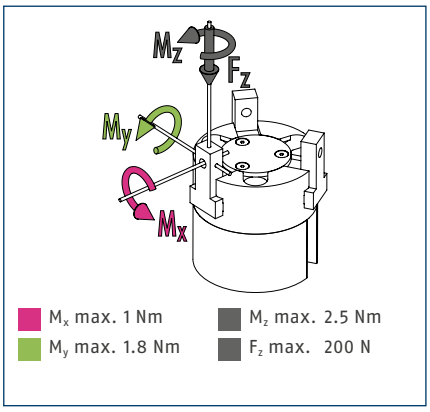

ⓘ The indicated moments and forces are static values, apply per base jaw and may occur simultaneously. M_y may arise in addition to the moment generated by the gripping force itself. If the max. permitted finger weight is exceeded, it is impreative to throttle the air supply so that the jaw movement occurs without any hitting or bouncing. Service life may be reduced.

Technical data

Description		MPZ 38	MPZ 38 FPS	MPZ 38-AS	MPZ 38-IS
ID		0340520	0340523	0340521	0340522
Stroke per jaw	[mm]	4	4	4	4
Closing- / opening force	[N]	120/140	120/140	150/-	-/180
min. spring force	[N]			30	40
Weight	[kg]	0.14	0.19	0.19	0.19
Recommended workpiece weight	[kg]	0.6	0.6	0.6	0.6
Fluid consumption per double stroke	[cm³]	3.5	3.5	10.3	8.4
min. / max. operating pressure	[bar]	2/8	2/8	4/6.5	4/6.5
Nominal operating pressure	[bar]	6	6	6	6
Closing- / opening time	[s]	0.02/0.02	0.02/0.02	0.02/0.04	0.04/0.02
Closing- / opening time only with spring	[s]			0.20	0.20
max. permitted finger length	[mm]	38	38	38	38
max. permitted weight per finger	[kg]	0.05	0.05	0.05	0.05
IP class		40	40	40	40
min. / max. ambient temperature	[°C]	5/90	5/90	5/90	5/90
Repeat accuracy	[mm]	0.01	0.01	0.01	0.01
Cleanroom class ISO 14644-1		5	5	5	5

Main view

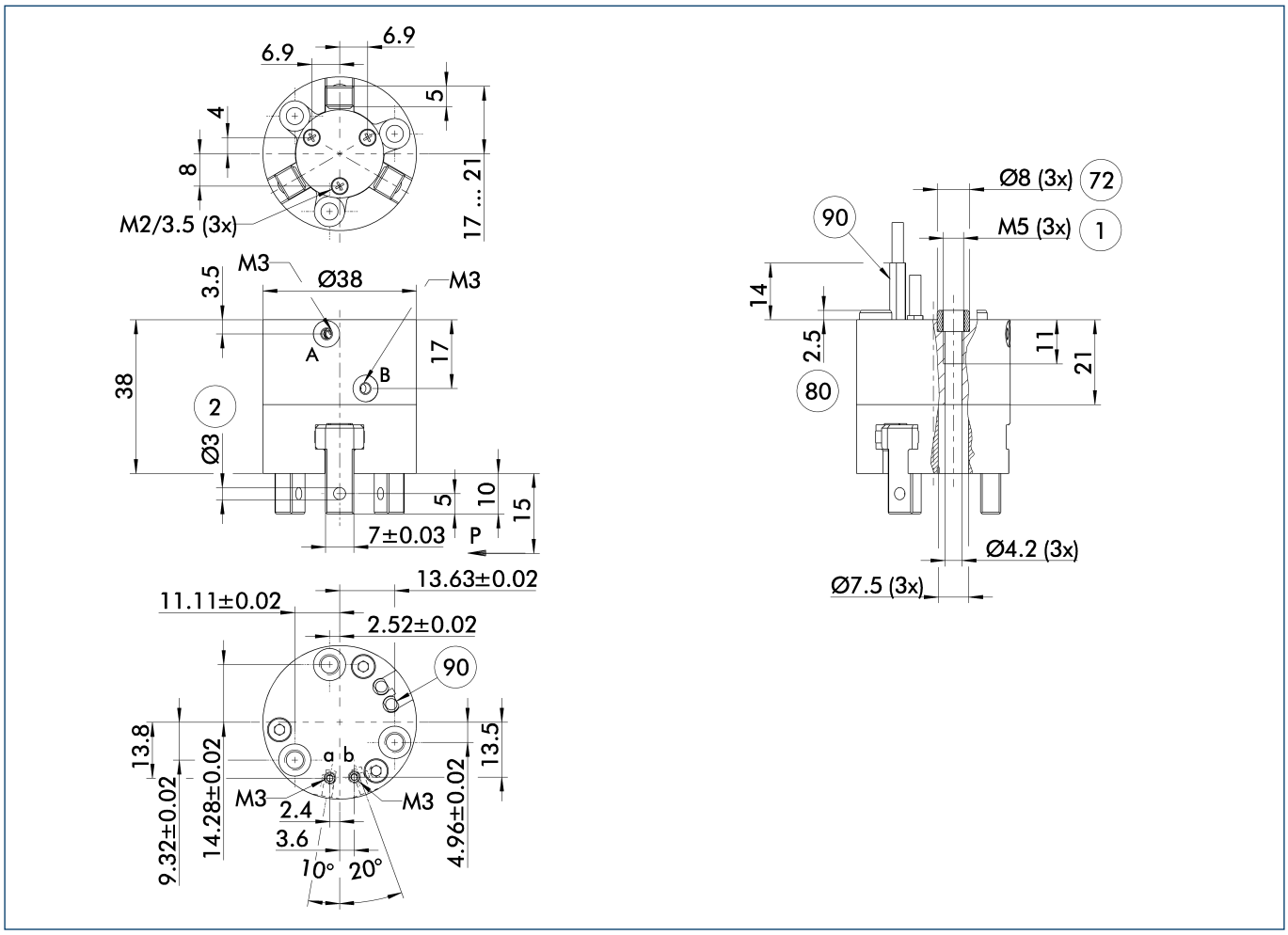

The drawing shows the gripper in the basic version with closed jaws, without dimensional consideration of the options described below.

ⓘ The SDV-P pressure maintenance valve can also be used for I.D. or O.D. gripping alternatively or in addition to the spring-loaded, mechanical gripping force maintenance device (see catalog section on "Accessories").

A, a Main / direct connection, gripper opening

B, b Main / direct connection, gripper closing

(1) Gripper connection

(2) Finger connection

(72) Fit for centering sleeves

(80) Depth of the centering sleeve hole in the mating part

(90) MMS 22... sensor

Hose-free direct connection M3

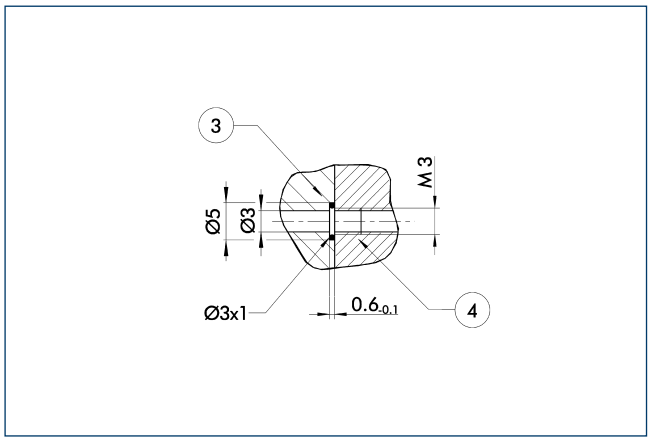

(3) Adapter (4) Gripper

The direct connection is used for supplying compressed air without hoses. Instead, the pressure medium is fed through bore-holes in the mounting plate.

Gripping force maintenance device AS / IS

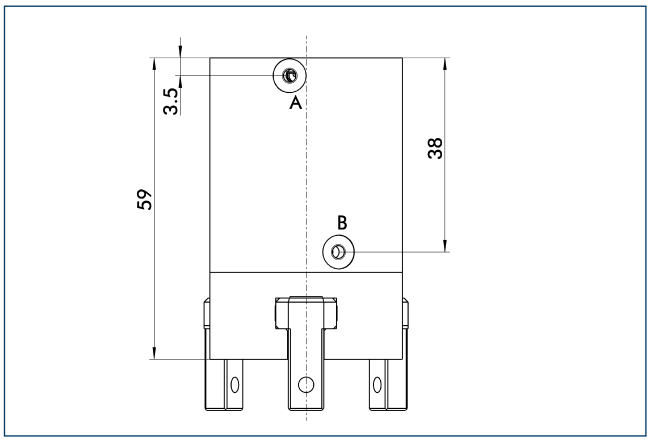

The mechanical maintenance of gripping force also assures a minimum gripping force in the case of a loss of pressure. With the AS / S variant, this acts as a closing force, and as an opening force for the IS variant. The maintenance of gripping force element can also be used as a means for increasing gripping force or for single actuated gripping.

Flexible position sensor

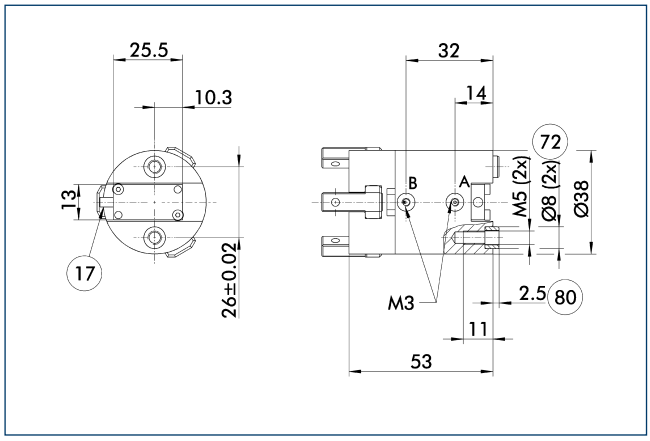

(17) Cable outlet
(72) Fit for centering sleeves
(80) Depth of the centering sleeve hole in the mating part

The following FPS position sensor can differentiate between five programmable areas and/or switching points for the stroke of a gripper, and can be used in combination with a PC as a measuring system.

SDV-P pressure maintenance valve

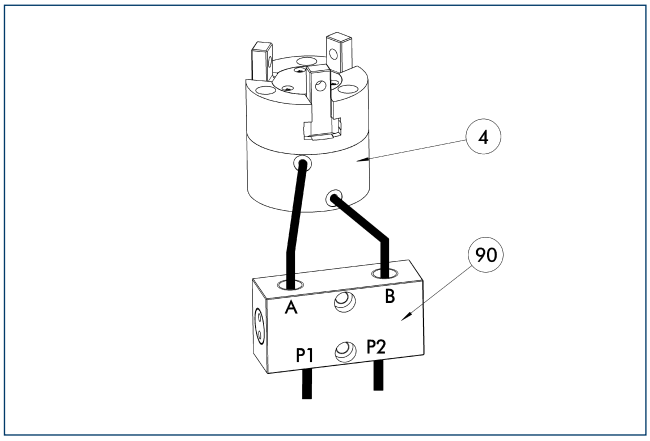

(4) Gripper (90) SDV-P pressure maintenance valve

The SDV-P pressure maintenance valves ensure that the pressure in the piston chamber of pneumatic gripping, rotary, linear, and quick-change modules is maintained temporarily during an emergency stop.

Description	ID	
Pressure maintenance valve		
SDV-P 04	0403130	

ABR-MPZ 38 finger blanks

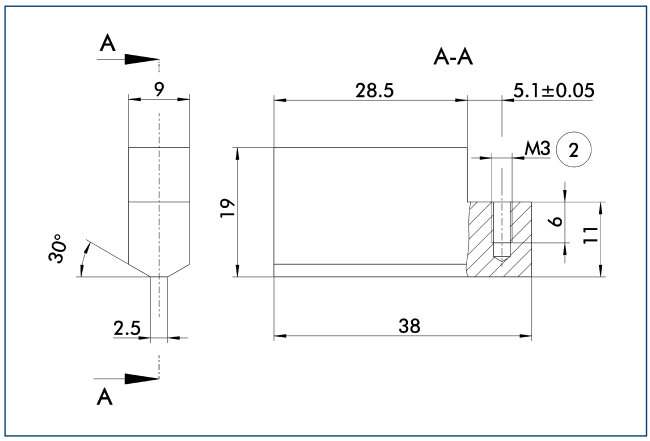

(2) Finger connection

Finger blanks for customized subsequent machining.

Description	ID	Material	Scope of delivery
Finger blanks			
ABR-MPZ 38	0340529	Aluminum	3

Modular assembly automation

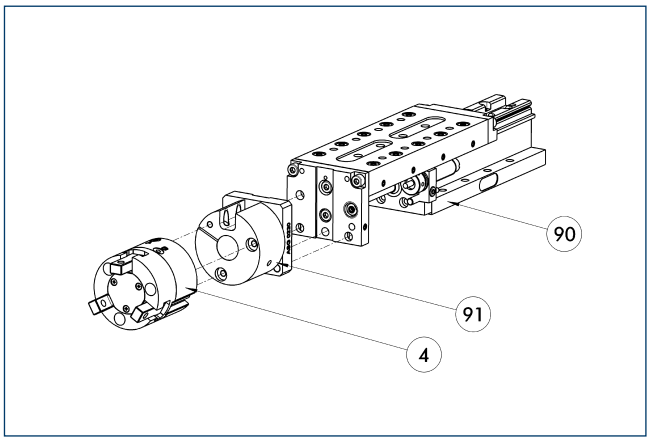

(4) Gripper
(91) ASG adapter plate
(90) CLM / KLM / LM / ELM / ELS / HLM linear module

Gripper and linear modules can be combined with standard adapters out of the modular assembly system. For more information see our catalog "Modular Assembly Automation".

Flexible position sensor

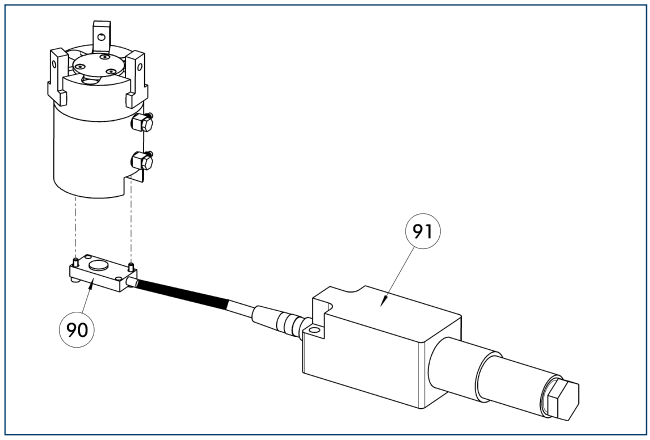

(90) FPS-S sensor
(91) FPS-F5 / -F5 T electronic processor

Flexible position monitoring of up to five positions.

Description	ID	Often combined
Sensor		
FPS-S 13	0301705	
Electronic processor		
FPS-F5	0301805	●
FPS-F5 T	0301807	

ⓘ When using a FPS system, a FPS sensor (FPS-S) and a control unit (FPS-F5 / F5 T) are required for each gripper as well as a mounting kit (AS), if listed. Cable extensions (KV) are available as options in the "Accessories" catalog section.

MMS electronic magnetic switches

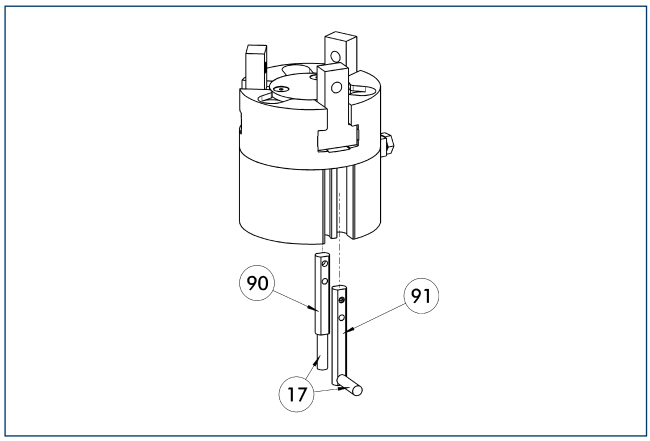

17 Cable outlet
91 MMS 22...-SA sensor
90 MMS 22... sensor

End position monitoring for mounting in the C-slot.

Description	ID	Often combined
MMS electronic magnetic switches		
MMS 22-S-M8-PNP	0301032	●
MMSK 22-S-PNP	0301034	
MMS electronic magnetic switches with lateral cable outlet		
MMS 22-S-M8-PNP-SA	0301042	●
MMSK 22-S-PNP-SA	0301044	
Cable extensions		
KV BW08-SG08 3P-0030-PNP	0301495	
KV BW08-SG08 3P-0100-PNP	0301496	
KV BW08-SG08 3P-0200-PNP	0301497	●
Clip for plug / socket		
CLI-M8	0301463	
Connection cables		
KA BG08-L 3P-0300-PNP	0301622	●
KA BG08-L 3P-0500-PNP	0301623	
KA BW08-L 3P-0300-PNP	0301594	
KA BW08-L 3P-0500-PNP	0301502	
Sensor distributor		
V2-M8	0301775	●
V4-M8	0301746	
V8-M8	0301751	

ⓘ Two sensors (closer/S) are required for each unit, plus extension cables as an option. Please note the minimum permitted bending radii for the sensor cables, which are generally 35 mm.

MMS PI1 programmable magnetic switches

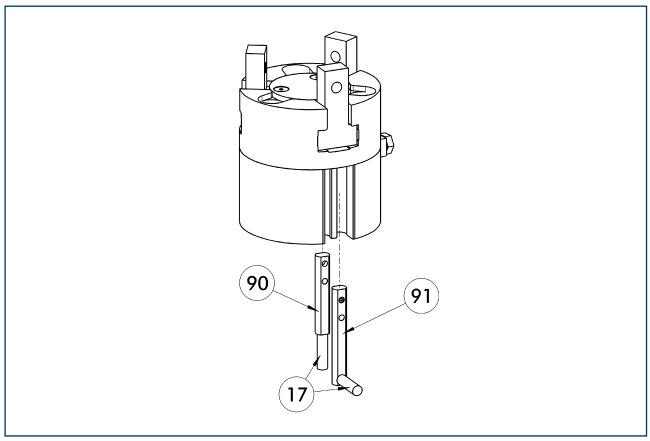

(17) Cable outlet
(91) MMS 22...-PI1-...-SA sensor
(90) MMS 22...-PI1-... sensor

Position query with one programmable position per sensor and electronics integrated in sensor. Programmable via MT magnet teaching tool (included in the scope of delivery) or ST plug teaching tool (optional). Limit position query mounted in C-groove. If the ST plug teaching tools are listed in the table, teaching can only take place with the ST plug teaching tools.

Description	ID	Often combined
MMS PI1 programmable magnetic switches		
MMS 22-PI1-S-M8-PNP	0301160	●
MMSK 22-PI1-S-PNP	0301162	
MMS PI1-HD programmable magnetic switches with stainless steel housing		
MMS 22-PI1-S-M8-PNP-HD	0301110	●
MMSK 22-PI1-S-PNP-HD	0301112	
MMS PI1 programmable magnetic switches with lateral cable outlet		
MMS 22-PI1-S-M8-PNP-SA	0301166	●
MMSK 22-PI1-S-PNP-SA	0301168	

ⓘ Two sensors (closer/S) are required for each unit, plus extension cables as an option. Please note the minimum permitted bending radii for the sensor cables, which are generally 35 mm. Connection cable, cable extensions, and sensor distributors can be found in the table for the MMS 22.

MMS PI2 programmable magnetic switches

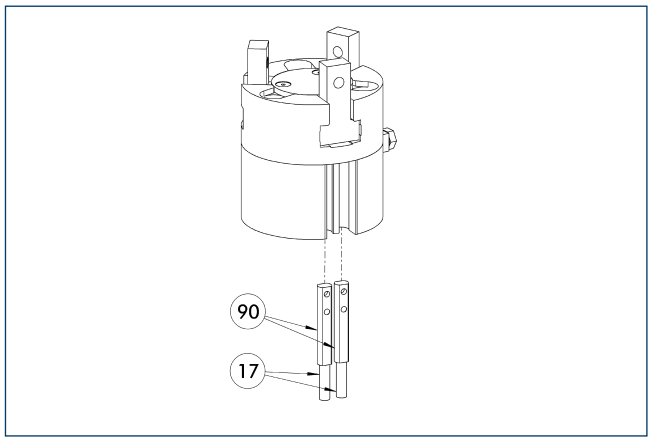

(17) Cable outlet
(90) MMS 22...-PI2-... sensor

Position query with two programmable positions per sensor and electronics integrated in sensor. Programmable via MT magnet teaching tool (included in the scope of delivery) or ST plug teaching tool (optional). Limit position query mounted in C-groove. If the ST plug teaching tools are listed in the table, teaching can only take place with the ST plug teaching tools.

Description	ID	Often combined
MMS PI2 programmable magnetic switches		
MMS 22-PI2-S-M8-PNP	0301180	●
MMSK 22-PI2-S-PNP	0301182	
MMS PI2-HD programmable magnetic switches with stainless steel housing		
MMS 22-PI2-S-M8-PNP-HD	0301130	●
MMSK 22-PI2-S-PNP-HD	0301132	

ⓘ Per unit one sensor (closer/S) is required, optionally a cable extension. Please note the minimum permitted bending radii for the sensor cables, which are generally 35 mm. Connection cable, cable extensions, and sensor distributors can be found in the table for the MMS-P 22.

MMS-P programmable magnetic switches

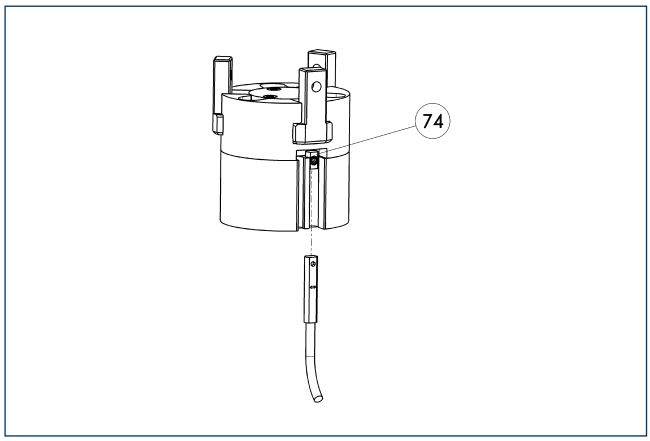

74 Stop for MMS-P

Position monitoring with two programmable positions per sensor. The end position monitoring is mounted in the C-slot.

Description	ID	Often combined
MMS-P programmable magnetic switches		
MMSK-P 22-S-PNP	0301371	
MMS-P 22-S-M8-PNP	0301370	●
Clip for plug / socket		
CLI-M8	0301463	
Connection cables		
KA BG08-L 4P-0500	0307767	●
KA BG08-L 4P-1000	0307768	
KA BW08-L 4P-0500	0307765	
KA BW08-L 4P-1000	0307766	
Sensor distributor		
V2-M8-4P-2XM8-3P	0301380	

ⓘ Per unit one sensor (closer/S) is required, optionally a cable extension. Please note the minimum permitted bending radii for the sensor cables, which are generally 35 mm.

MPZ 45

SCHUNK Grippers pneumatic | 3-Finger Centric Grippers | Small Components Gripper

Gripping force, O.D. gripping

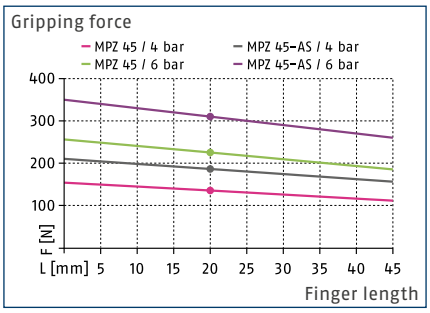

Gripping force, I.D. gripping

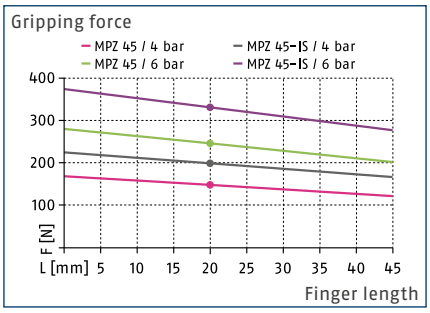

Finger load

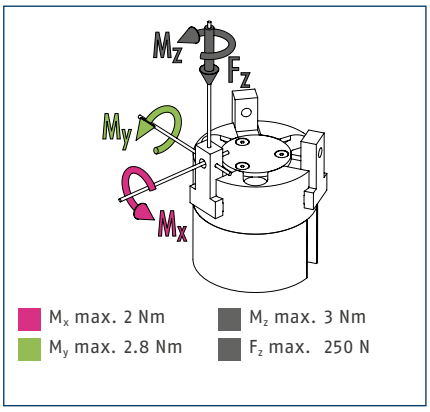

ⓘ The indicated moments and forces are static values, apply per base jaw and may occur simultaneously. M_y may arise in addition to the moment generated by the gripping force itself. If the max. permitted finger weight is exceeded, it is impreative to throttle the air supply so that the jaw movement occurs without any hitting or bouncing. Service life may be reduced.

Technical data

Description		MPZ 45	MPZ 45 FPS	MPZ 45-AS	MPZ 45-IS
ID		0340530	0340533	0340531	0340532
Stroke per jaw	[mm]	5	5	5	5
Closing- / opening force	[N]	225/245	225/245	310/-	-/340
min. spring force	[N]			85	95
Weight	[kg]	0.22	0.29	0.28	0.28
Recommended workpiece weight	[kg]	1.15	1.15	1.15	1.15
Fluid consumption per double stroke	[cm³]	8.9	8.9	18.4	15.2
min. / max. operating pressure	[bar]	2/8	2/8	4/6.5	4/6.5
Nominal operating pressure	[bar]	6	6	6	6
Closing- / opening time	[s]	0.05/0.05	0.05/0.05	0.05/0.06	0.06/0.05
Closing- / opening time only with spring	[s]			0.30	0.30
max. permitted finger length	[mm]	45	45	45	45
max. permitted weight per finger	[kg]	0.08	0.08	0.08	0.08
IP class		40	40	40	40
min. / max. ambient temperature	[°C]	5/90	5/90	5/90	5/90
Repeat accuracy	[mm]	0.01	0.01	0.01	0.01
Cleanroom class ISO 14644-1		5	5	5	5

Main view

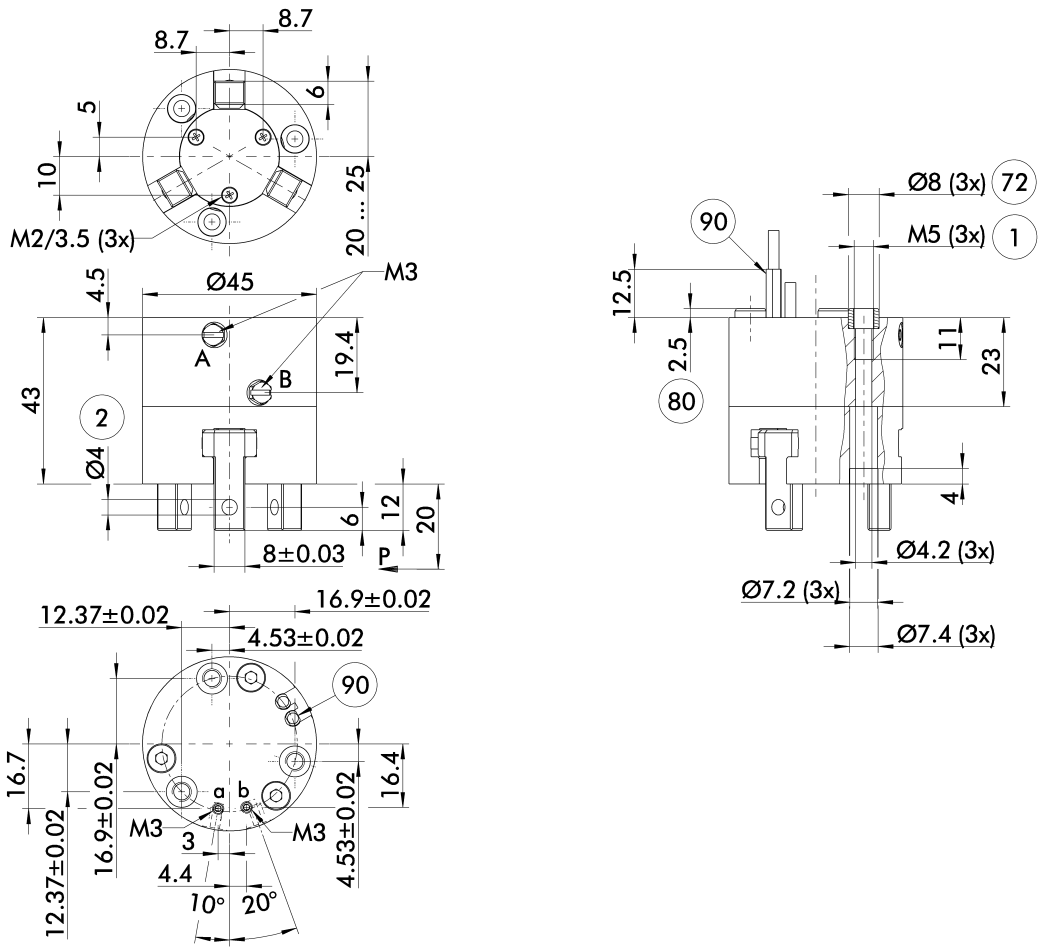

The drawing shows the gripper in the basic version with closed jaws, without dimensional consideration of the options described below.

ⓘ The SDV-P pressure maintenance valve can also be used for I.D. or O.D. gripping alternatively or in addition to the spring-loaded, mechanical gripping force maintenance device (see catalog section on "Accessories").

A, a Main / direct connection, gripper opening

B, b Main / direct connection, gripper closing

(1) Gripper connection

(2) Finger connection

(72) Fit for centering sleeves

(80) Depth of the centering sleeve hole in the mating part

(90) MMS 22... sensor

Hose-free direct connection M3

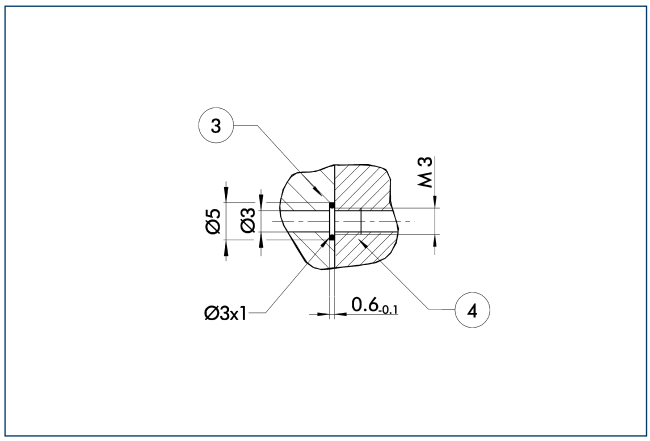

(3) Adapter (4) Gripper

The direct connection is used for supplying compressed air without hoses. Instead, the pressure medium is fed through bore-holes in the mounting plate.

Gripping force maintenance device AS / IS

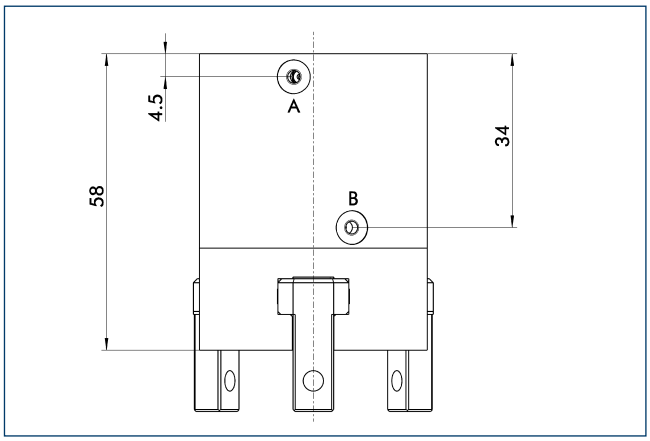

The mechanical maintenance of gripping force also assures a minimum gripping force in the case of a loss of pressure. With the AS / S variant, this acts as a closing force, and as an opening force for the IS variant. The maintenance of gripping force element can also be used as a means for increasing gripping force or for single actuated gripping.

Flexible position sensor

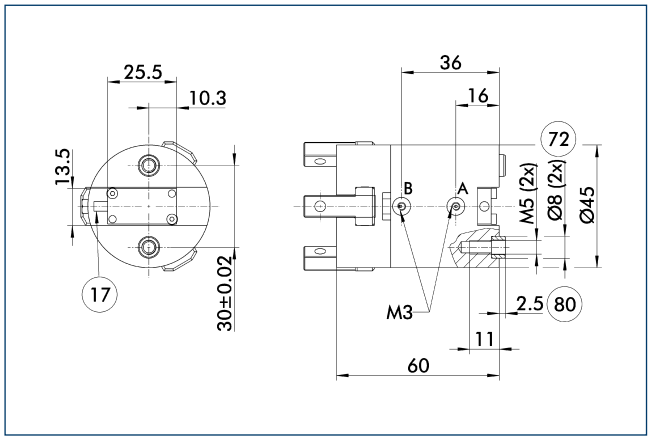

(17) Cable outlet
(72) Fit for centering sleeves
(80) Depth of the centering sleeve hole in the mating part

The following FPS position sensor can differentiate between five programmable areas and/or switching points for the stroke of a gripper, and can be used in combination with a PC as a measuring system.

SDV-P pressure maintenance valve

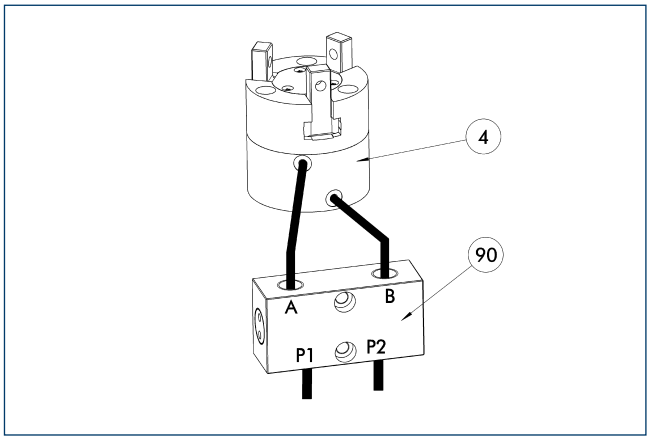

(4) Gripper (90) SDV-P pressure maintenance valve

The SDV-P pressure maintenance valves ensure that the pressure in the piston chamber of pneumatic gripping, rotary, linear, and quick-change modules is maintained temporarily during an emergency stop.

Description	ID	
Pressure maintenance valve		
SDV-P 04	0403130	

ABR-MPZ 45 finger blanks

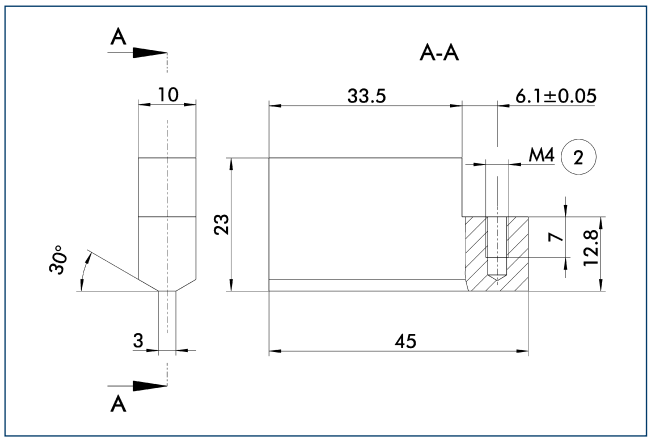

(2) Finger connection

Finger blanks for customized subsequent machining.

Description	ID	Material	Scope of delivery
Finger blanks			
ABR-MPZ 45	0340539	Aluminum	3

Modular assembly automation

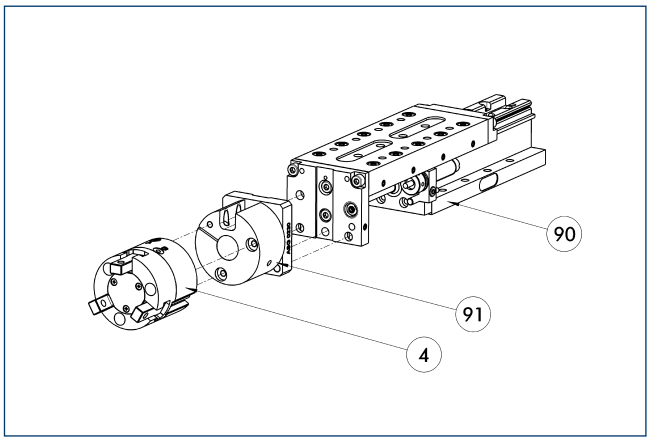

(4) Gripper
(90) CLM / KLM / LM / ELM / ELS / HLM linear module
(91) ASG adapter plate

Gripper and linear modules can be combined with standard adapters out of the modular assembly system. For more information see our catalog "Modular Assembly Automation".

Flexible position sensor

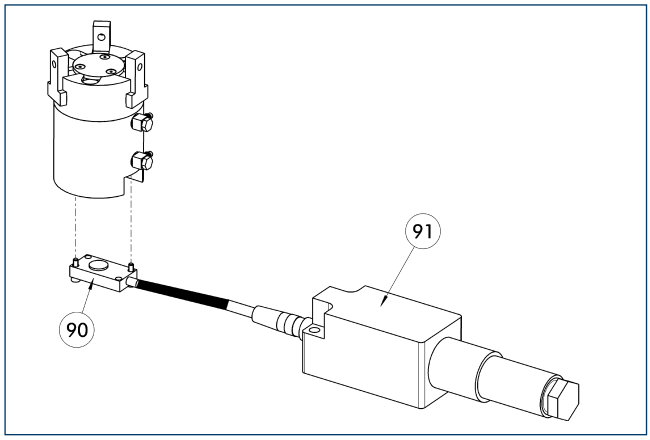

(90) FPS-S sensor
(91) FPS-F5 / -F5 T electronic processor

Flexible position monitoring of up to five positions.

Description	ID	Often combined
Sensor		
FPS-S 13	0301705	
Electronic processor		
FPS-F5	0301805	●
FPS-F5 T	0301807	

ⓘ When using a FPS system, a FPS sensor (FPS-S) and a control unit (FPS-F5 / F5 T) are required for each gripper as well as a mounting kit (AS), if listed. Cable extensions (KV) are available as options in the "Accessories" catalog section.

MMS electronic magnetic switches

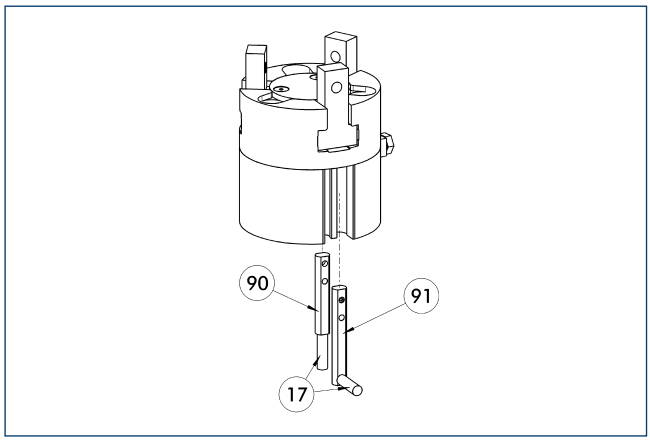

17 Cable outlet
91 MMS 22...-SA sensor
90 MMS 22... sensor

End position monitoring for mounting in the C-slot.

Description	ID	Often combined
MMS electronic magnetic switches		
MMS 22-S-M8-PNP	0301032	●
MMSK 22-S-PNP	0301034	
MMS electronic magnetic switches with lateral cable outlet		
MMS 22-S-M8-PNP-SA	0301042	●
MMSK 22-S-PNP-SA	0301044	
Cable extensions		
KV BW08-SG08 3P-0030-PNP	0301495	
KV BW08-SG08 3P-0100-PNP	0301496	
KV BW08-SG08 3P-0200-PNP	0301497	●
Clip for plug / socket		
CLI-M8	0301463	
Connection cables		
KA BG08-L 3P-0300-PNP	0301622	●
KA BG08-L 3P-0500-PNP	0301623	
KA BW08-L 3P-0300-PNP	0301594	
KA BW08-L 3P-0500-PNP	0301502	
Sensor distributor		
V2-M8	0301775	●
V4-M8	0301746	
V8-M8	0301751	

ⓘ Two sensors (closer/S) are required for each unit, plus extension cables as an option. Please note the minimum permitted bending radii for the sensor cables, which are generally 35 mm.

MMS PI1 programmable magnetic switches

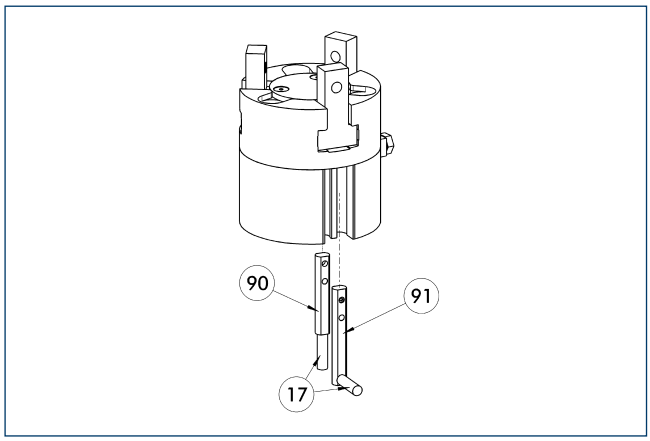

(17) Cable outlet
(91) MMS 22...-PI1-...-SA sensor
(90) MMS 22...-PI1-... sensor

Position query with one programmable position per sensor and electronics integrated in sensor. Programmable via MT magnet teaching tool (included in the scope of delivery) or ST plug teaching tool (optional). Limit position query mounted in C-groove. If the ST plug teaching tools are listed in the table, teaching can only take place with the ST plug teaching tools.

Description	ID	Often combined
MMS PI1 programmable magnetic switches		
MMS 22-PI1-S-M8-PNP	0301160	●
MMSK 22-PI1-S-PNP	0301162	
MMS PI1-HD programmable magnetic switches with stainless steel housing		
MMS 22-PI1-S-M8-PNP-HD	0301110	●
MMSK 22-PI1-S-PNP-HD	0301112	
MMS PI1 programmable magnetic switches with lateral cable outlet		
MMS 22-PI1-S-M8-PNP-SA	0301166	●
MMSK 22-PI1-S-PNP-SA	0301168	

ⓘ Two sensors (closer/S) are required for each unit, plus extension cables as an option. Please note the minimum permitted bending radii for the sensor cables, which are generally 35 mm. Connection cable, cable extensions, and sensor distributors can be found in the table for the MMS 22.

MMS PI2 programmable magnetic switches

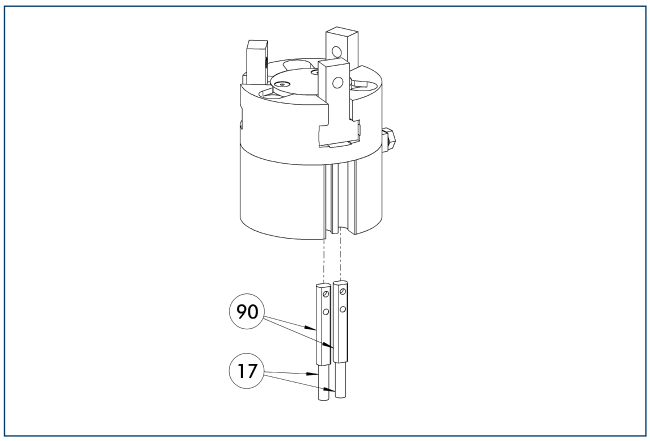

(17) Cable outlet
(90) MMS 22...-PI2-... sensor

Position query with two programmable positions per sensor and electronics integrated in sensor. Programmable via MT magnet teaching tool (included in the scope of delivery) or ST plug teaching tool (optional). Limit position query mounted in C-groove. If the ST plug teaching tools are listed in the table, teaching can only take place with the ST plug teaching tools.

Description	ID	Often combined
MMS PI2 programmable magnetic switches		
MMS 22-PI2-S-M8-PNP	0301180	●
MMSK 22-PI2-S-PNP	0301182	
MMS PI2-HD programmable magnetic switches with stainless steel housing		
MMS 22-PI2-S-M8-PNP-HD	0301130	●
MMSK 22-PI2-S-PNP-HD	0301132	

ⓘ Per unit one sensor (closer/S) is required, optionally a cable extension. Please note the minimum permitted bending radii for the sensor cables, which are generally 35 mm. Connection cable, cable extensions, and sensor distributors can be found in the table for the MMS-P 22.

MMS-P programmable magnetic switches

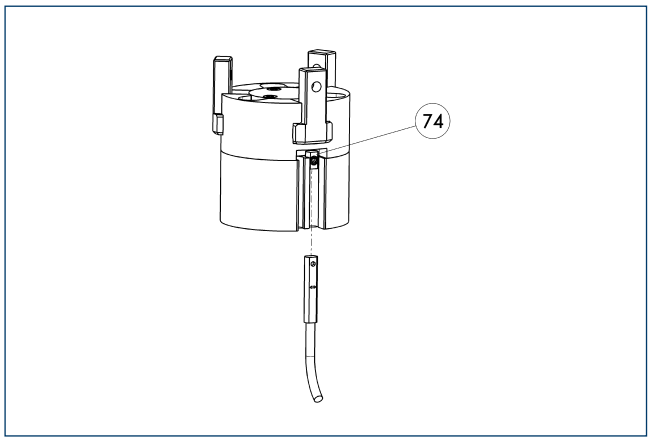

74 Stop for MMS-P

Position monitoring with two programmable positions per sensor. The end position monitoring is mounted in the C-slot.

Description	ID	Often combined
MMS-P programmable magnetic switches		
MMSK-P 22-S-PNP	0301371	
MMS-P 22-S-M8-PNP	0301370	●
Clip for plug / socket		
CLI-M8	0301463	
Connection cables		
KA BG08-L 4P-0500	0307767	●
KA BG08-L 4P-1000	0307768	
KA BW08-L 4P-0500	0307765	
KA BW08-L 4P-1000	0307766	
Sensor distributor		
V2-M8-4P-2XM8-3P	0301380	

ⓘ Per unit one sensor (closer/S) is required, optionally a cable extension. Please note the minimum permitted bending radii for the sensor cables, which are generally 35 mm.

Reliable. Robust. Flexible.
PZN-plus Universal Gripper

Universal centric gripper with high gripping force and maximum moments due to multi-tooth guidance

Field of Application

Multi-purpose due to the diverse range of accessories. Can also be used in fields of application with special requirements to the gripper (temperature, chemical resistance, dirt, and many more).

Advantages – Your benefit

Robust multi-tooth guidance for precise handling

High maximum moments possible suitable for using long gripper fingers

Wedge-hook design for high power transmission and synchronized gripping

Air supply via hose-free direct connection or screw connections for flexible pressure supply in all automated systems

Comprehensive sensor accessory program for versatile interrogation possibilities and control of stroke position

Manifold options for special optimisation to your specific application (dust-tight, high-temperature, corrosion-protected, etc.)

Fastening at one gripper side in two screw directions for universal and flexible gripper assembly

Sizes	Weight	Gripping force	Stroke per jaw	Workpiece weight
Quantity: 11	0.13 .. 80 kg	255 .. 57300 N	2 .. 45 mm	1.3 .. 227 kg

Functional Description

The piston is moved up and down by compressed air.
The angled active surfaces of the wedge-hook produce a synchronized, centric jaw movement.

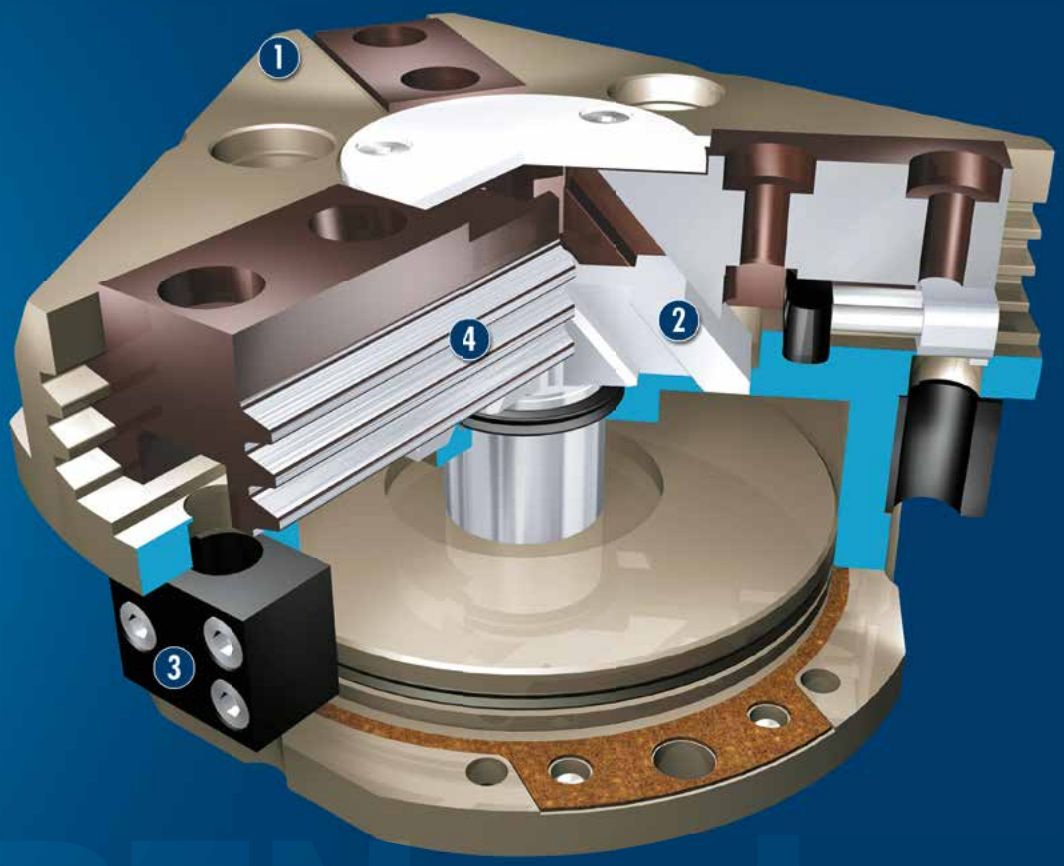

① **Housing**
Weight-optimized through application of high-strength aluminum alloy

② **Wedge-hook design**
for high power transmission and centric gripping

③ **Sensor system**
Brackets for proximity switches and adjustable control cams in the housing

④ **Multiple-tooth guidance**
Precise gripping through base jaw guidance with a high load capacity and a minimum play

CAD data, operating manuals and other current product documents are available at **www.schunk.com**

General Notes about the Series

Operating principle: Wedge-hook kinematics

Housing material: Aluminum alloy, anodized

Base jaw material: Steel

Actuation: pneumatic, with filtered compressed air as per DIN ISO 8573-1: 7 4 4

Warranty: 36 months (for details, GTCs, and operating manuals, visit www.schunk.com)

Scope of delivery: Mount for proximity switch, centering sleeves, O-rings for direct connection, assembly and operating manual with declaration of incorporation.

Gripping force: is the arithmetic total of the gripping force applied to each gripper jaw at distance P (see illustration).

Finger length: is measured from the upper edge of the gripper housing in the direction of the main axis. The breach of the max. permitted finger length can bring higher abrasion. The maximum permissible finger length applies up to the nominal operating pressure. With higher pressures, the finger length must be reduced proportionally to the nominal operating pressure.

Repeat accuracy: is defined as the spread of the limit position after 100 consecutive strokes.

Workpiece weight: is calculated for a force-fit connection with a coefficient of friction of 0.1 and a safety factor of 2 against slippage of the workpiece on acceleration due to gravity g. Considerably heavier workpiece weights are permitted with form-fit gripping.

Closing and opening times: are purely the times that the base jaws or fingers are in motion. Valve switching times, hose filling times or PLC reaction times are not included in the above times and must be taken into consideration when determining cycle times.

Application example

Insertion tool for assembling small to medium-sized axles. Due to the rotary feed-through, the axles can be turned several times to an unlimited extent (> 360°). Slip ring contacts integrated in the rotary feed-through reliably supply the gripper with power.

1. PZN-plus 3-Finger Centric Gripper
2. DDF 2 Rotary Feed-through

SCHUNK offers more ...

The following components make the product PZN-plus even more productive – the suitable addition for the highest functionality, flexibility, reliability, and controlled production.

Sensor System

Fittings

Universal Intermediate Jaw

AGE-F Compensation Unit

Sensor Distributor

Jaw Quick-change System

Sensor Cables

Protection Cover

SDV-P Pressure Maintenance Valve

Finger Blanks with Jaw Quick-change System

Force Measuring Jaws

Analog Position Sensor

ⓘ Further information regarding the products can be found on the following product pages or at www.schunk.com. Please contact us for further information: SCHUNK technical hotline +49-7133-103-2696

Options and special Information

Gripping force maintenance version AS / IS: The mechanical gripping force maintenance version ensures a minimum gripping force also in the case of a drop in pressure. In the AS / S version this has the effect of a closing force, in the IS version of an opening force.
Anti-corrosion version K: for use in corrosion-inducing atmospheres
High-temperature version V/HT: for use in hot environments
Force intensified version KVZ: if higher gripping forces are required
Dust-tight version SD: absolutely sealed, increased degree of protection against the ingress of materials.
Precision version P: for the highest accuracy
ATEX version EX: for explosive environments
Additional versions: Various options can be combined.

SCHUNK PZN-plus gripper

Accessories at a glance

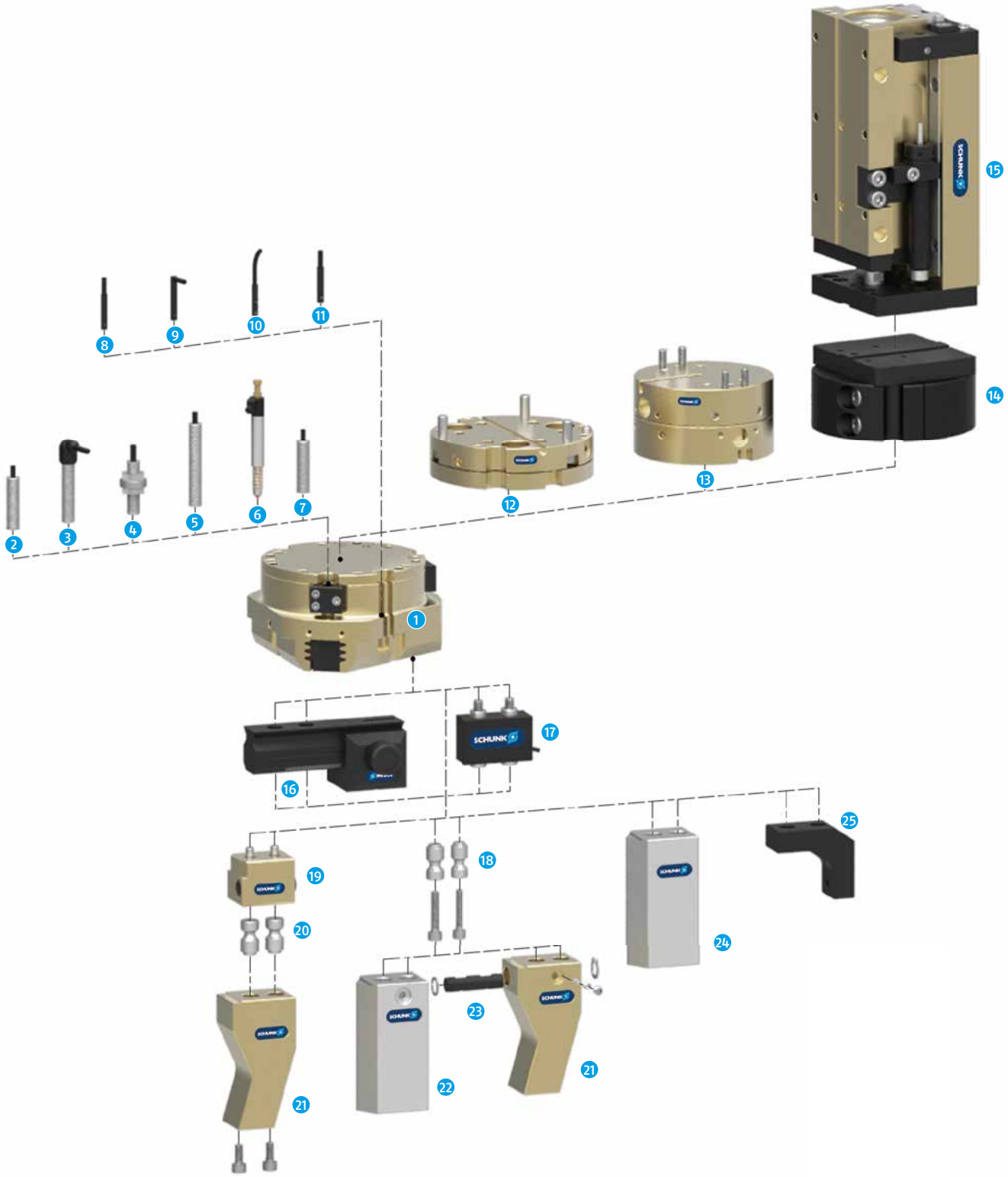

1 **PZN-plus**
Universal servo-electric 3-finger centric gripper with high gripping force and high maximum moment due to multi-tooth guidance

2 **IN ...**
Inductive proximity switch with integrated cable and axial cable outlet

3 **IN ...-SA**
Inductive proximity switch with integrated cable and side cable outlet

4 **FPS**
Digital measuring system for monitoring up to five different freely selectable positions

5 **APS-Z80**
Inductive measuring system for precise monitoring of the gripper jaw position with analog output

6 **APS-M1S**
Mechanical measuring system for precise monitoring of the gripper jaw position with analog output

7 **RMS**
Reed switch, in round version

8 **MMS 22**
Magnetic switch with axial cable outlet for monitoring one position

8 **MMS 22-PI1**
Magnetic switch with axial cable outlet for monitoring one freely programmable position

8 **MMS 22-PI2**
Magnetic switch with axial cable outlet for monitoring two freely programmable positions

9 **MMS 22-PI1-SA**
Magnetic switch with side cable outlet for monitoring one freely programmable position

9 **MMS 22-SA**
Magnetic switch with side cable outlet for monitoring one position

10 **MMS-P**
Magnetic switch with axial cable outlet for monitoring two freely programmable positions, with integrated teach function

11 **RMS 22**
Reed switch for direct mounting in the C slot

12 **TCU**
Tolerance compensation unit for compensating smaller tolerances in the plane

13 **AGE**
Compensation unit for compensating larger tolerances in the X and Y axis

14 **ASG**
Adapter plate for combining many different automation components in a modular system

15 **CLM**
Linear module with pneumatic drive and pre-loaded junction rollers with zero play

16 **UZB**
The universal intermediate jaw allow fast and safe adjustment of top jaws on the gripper, without the use of tools

17 **FMS**
Power measurement jaws for measuring gripping forces, workpiece weights or dimensional deviations

18 **BSWS-AR**
Adapter coupling of the jaw quick-change system for fast, manual changing of top jaws

19 **BSWS-B**
Locking mechanism of the jaw quick-change system for fast, manual changing of top jaws

20 **BSWS-A**
Adapter coupling of the jaw quick-change system for adaptation to the customized finger

21 **Customized finger**

22 **BSWS-ABR**
Aluminum finger blank with interface of the jaw quick-change system

22 **BSWS-SBR**
Steel finger blank with interface of the quick-change jaw system

23 **BSWS-UR**
Locking mechanism for integration of the jaw quick-change system in customized fingers

24 **ABR / SBR**
Steel or aluminum finger blanks with standardized screw connection pattern

25 **ZBA**
Intermediate jaws for reorientation of the bolt-on surface

PZN-plus 40

SCHUNK Grippers pneumatic | 3-Finger Centric Grippers | Universal Gripper

Gripping force, O.D. gripping

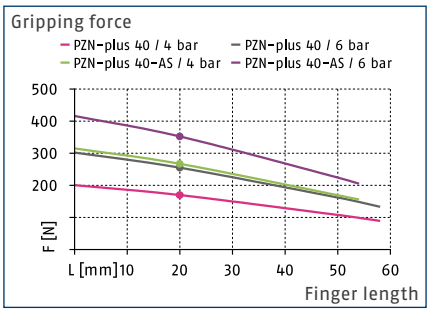

Gripping force, I.D. gripping

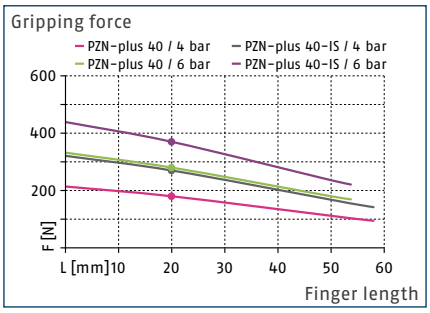

Finger load

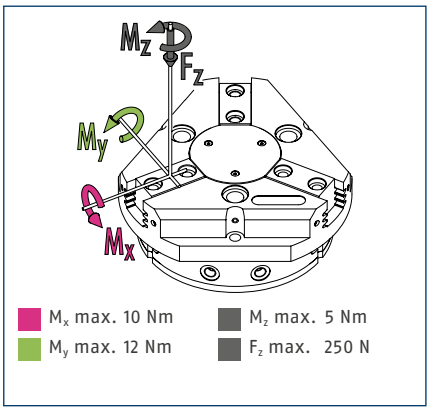

ⓘ The indicated moments and forces are static values, apply per base jaw and may occur simultaneously. M_y may arise in addition to the moment generated by the gripping force itself. If the max. permitted finger weight is exceeded, it is impreative to throttle the air supply so that the jaw movement occurs without any hitting or bouncing. Service life may be reduced.

Technical data

Description		PZN-plus 40	PZN-plus 40-AS	PZN-plus 40-IS
ID		0303308	0303508	0303538
Stroke per jaw	[mm]	2.5	2.5	2.5
Closing- / opening force	[N]	255/270	355/-	-/370
min. spring force	[N]		100	100
Weight	[kg]	0.13	0.15	0.15
Recommended workpiece weight	[kg]	1.3	1.3	1.3
Fluid consumption per double stroke	[cm³]	5	9	9
min. / max. operating pressure	[bar]	2/8	4/6.5	4/6.5
Nominal operating pressure	[bar]	6	6	6
Closing- / opening time	[s]	0.03/0.03	0.02/0.04	0.04/0.02
Closing- / opening time only with spring	[s]		0.08	0.08
max. permitted finger length	[mm]	58	54	54
max. permitted weight per finger	[kg]	0.1	0.1	0.1
IP class		40	40	40
min. / max. ambient temperature	[°C]	5/90	5/90	5/90
Repeat accuracy	[mm]	0.01	0.01	0.01
Cleanroom class ISO 14644-1		5	5	5
Options and their characteristics				
Dust-tight version		37303308	37303508	37303538
IP class		64	64	64
Weight	[kg]	0.16	0.18	0.18
Anti-corrosion version		38303308	38303508	38303538
High-temperature version		39303308	39303508	39303538
min. / max. ambient temperature	[°C]	5/130	5/130	5/130
Force intensified version		0372199	0372219	0372239
Closing- / opening force	[N]	410/432	510/-	-/532
Weight	[kg]	0.19	0.21	0.21
Maximum pressure	[bar]	6	6	6
max. permitted finger length	[mm]	50	40	40
Precision version		0303338	0303488	

ⓘ The full gripping force according to the data table is only realised after around 100 gripping cycles.

Main view

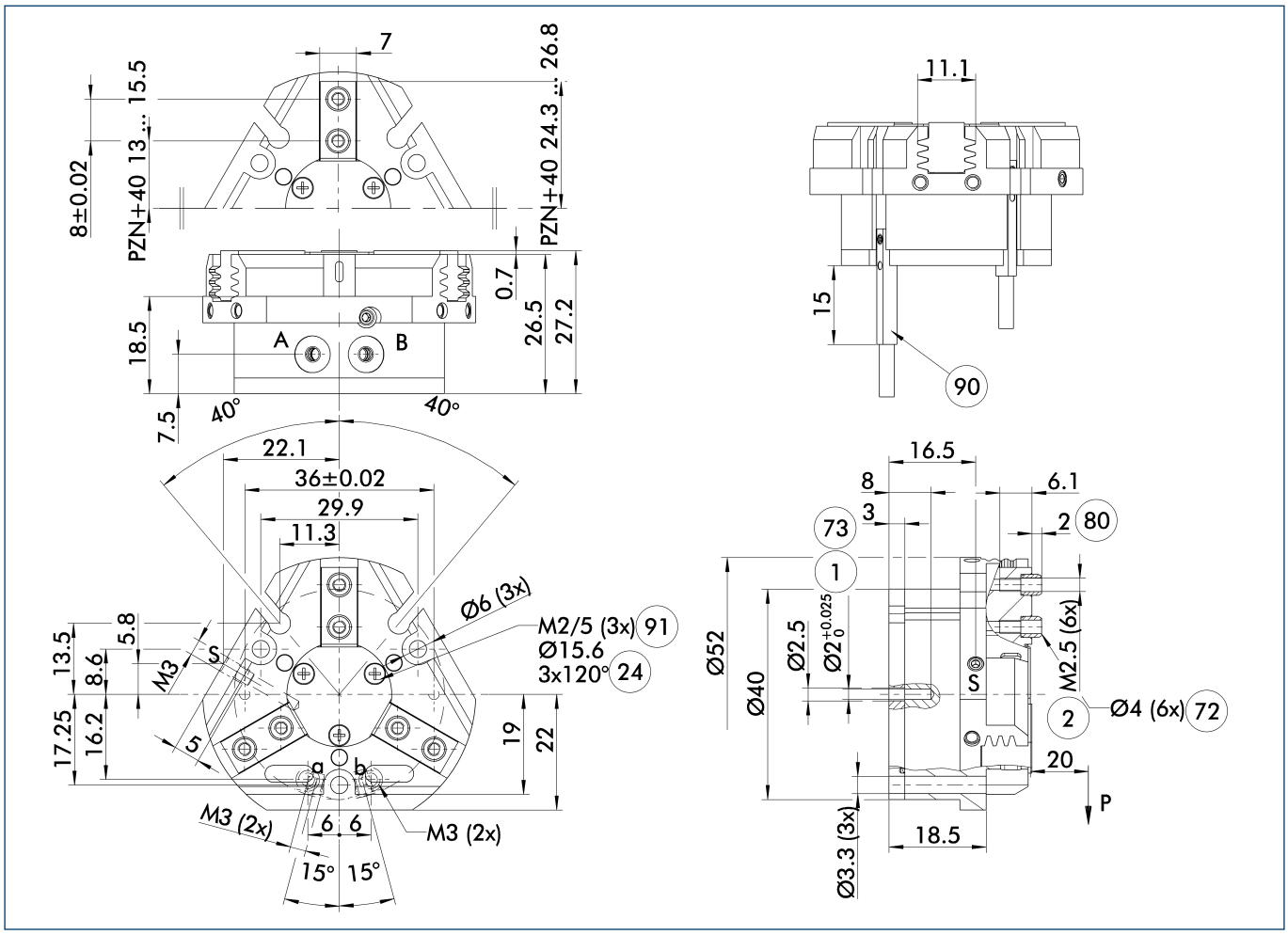

The drawing shows the gripper in the basic version with closed jaws, without dimensional consideration of the options described below.

ⓘ The SDV-P pressure maintenance valve can also be used for I.D. or O.D. gripping alternatively or in addition to the spring-loaded, mechanical gripping force maintenance device (see catalog section on "Accessories").

A, a Main / direct connection, gripper opening

B, b Main / direct connection, gripper closing

S Air purge connection (0.5 ... 1 bar)

(1) Gripper connection

(2) Finger connection

(24) Bolt circle

(72) Fit for centering sleeves

(73) Fit for centering pins

(80) Depth of the centering sleeve hole in the mating part

(90) MMS 22... sensor

(91) Thread below the cover for fastening external attachments

Hose-free direct connection M3

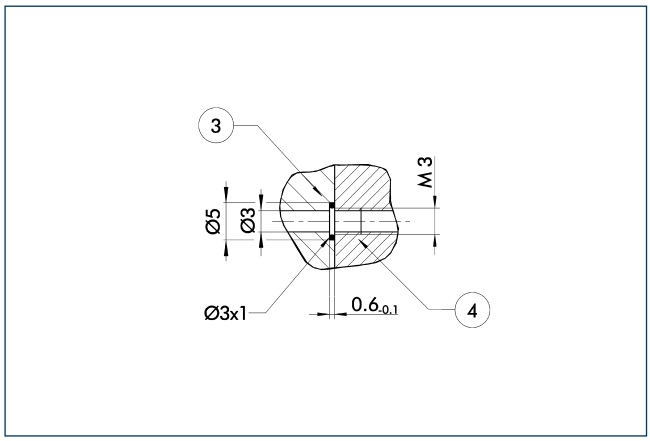

3 Adapter 4 Gripper

The direct connection is used for supplying compressed air without hoses. Instead, the pressure medium is fed through bore-holes in the mounting plate.

Gripping force maintenance device AS / IS

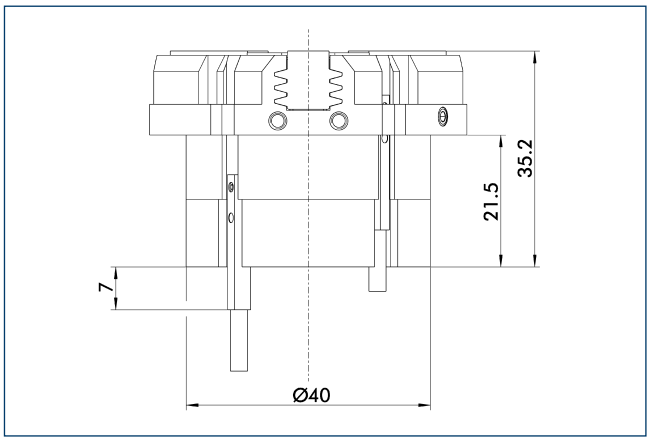

The mechanical maintenance of gripping force also assures a minimum gripping force in the case of a loss of pressure. With the AS / S variant, this acts as a closing force, and as an opening force for the IS variant. The maintenance of gripping force element can also be used as a means for increasing gripping force or for single actuated gripping.

Dust-tight version

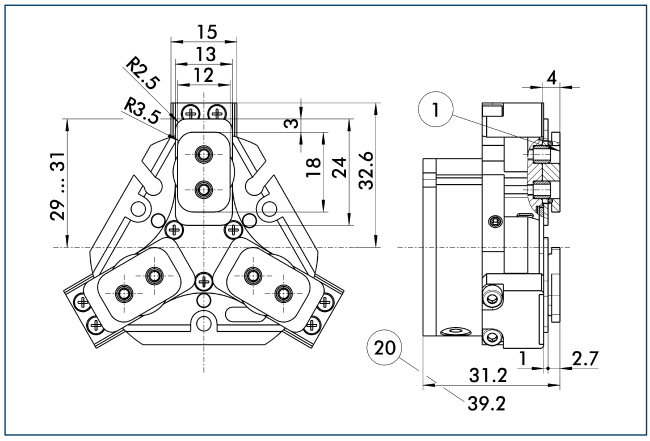

1 Gripper connection 20 For AS / IS version

The "dust-protection" option increases the degree of protection against penetrating substances. The screw connection diagram shifts by the height of the intermediate jaw. The finger length is still measured from the upper edge of the gripper housing.

Force intensified version

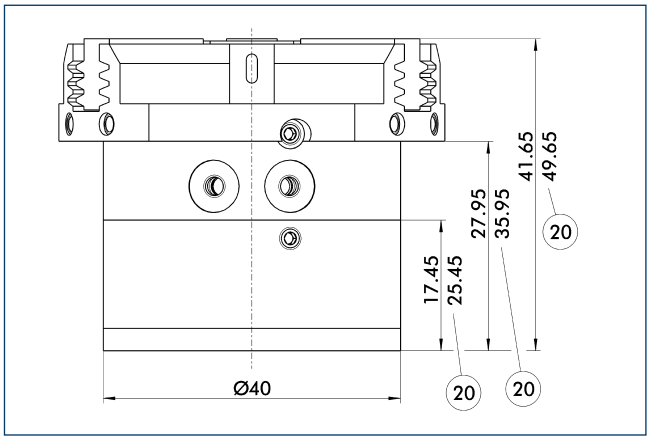

20 For AS / IS version

The KVZ power booster cylinder increases gripping forces for opening and closing. A second piston connected in a series increases the force on the diagonal pull for this purpose. If applicable, observe the additional installation height for combination with an element for maintenance of gripping force.

Precision version

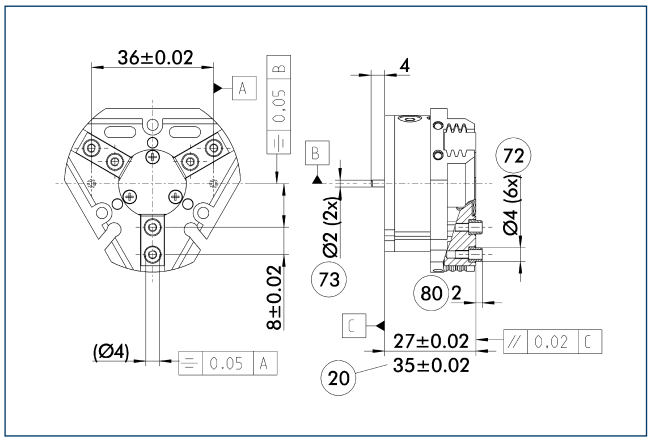

20 For AS / IS version
72 Fit for centering sleeves
73 Fit for centering pins
80 Depth of the centering sleeve hole in the mating part

The indicated tolerances just refer to the types of precision versions shown in the chart of technical specifications. All other types of precision versions are available on request.

Spring-loaded pressure piece

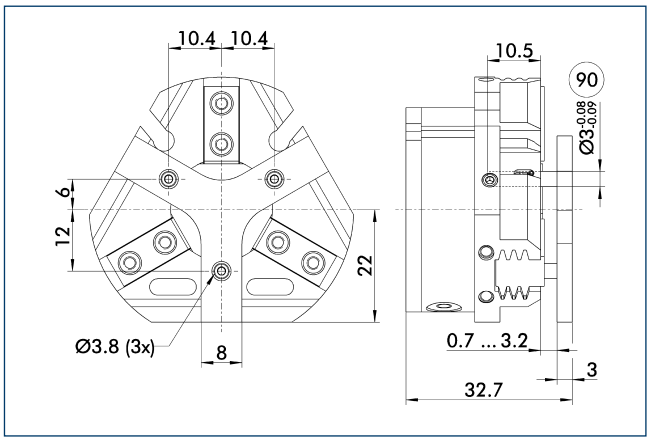

90 Guide pin

For spring-supported positioning of the workpiece against a stop after the gripper has opened. Especially developed for loading machines.

Description	ID	Stroke [mm]	Min. force [N]
Spring-loaded pressure piece			
A-PZN-plus 40	0303718	2.5	5

ⓘ The pressure piece cannot be combined with the dust-tight option. Please ask for details about a special pressure piece.

SDV-P pressure maintenance valve

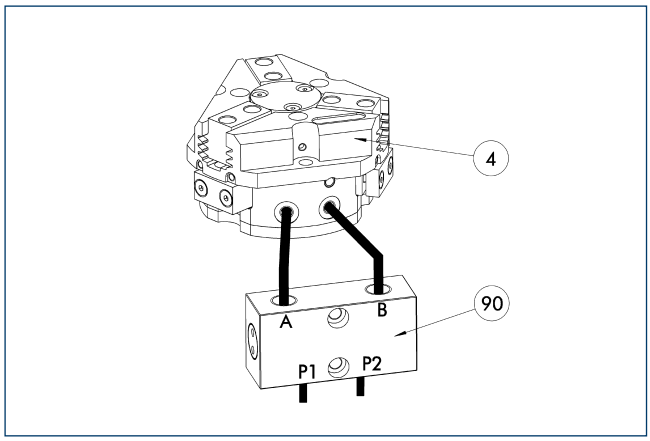

4 Gripper
90 SDV-P pressure maintenance valve

The SDV-P pressure maintenance valves ensure that the pressure in the piston chamber of pneumatic gripping, rotary, linear, and quick-change modules is maintained temporarily during an emergency stop.

Description	ID	
Pressure maintenance valve		
SDV-P 04	0403130	

HUE PZN-plus 40 protective cover

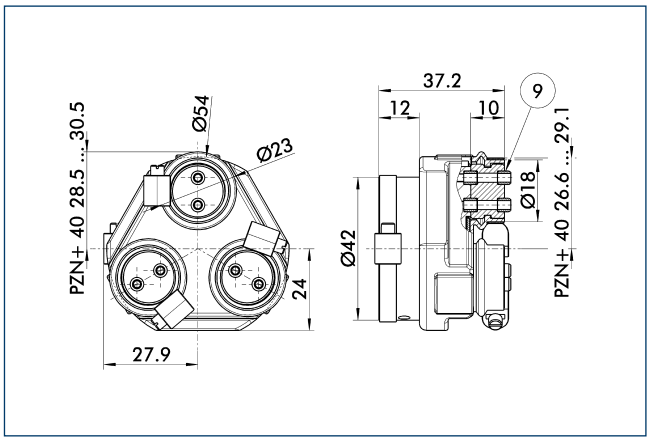

9 For mounting screw connection diagram, see basic version

The HUE protective cover completely protects the gripper against external influences up to IP65 if an additional sealing of the cover bottom is provided as part of the application. The mounting diagram shifts by the height of the intermediate jaw.

Description	ID	Cleanroom class ISO 14644-1	IP class
Protection cover			
HUE PZN-plus 40	0303478	2	65

UZB 40 universal intermediate jaw

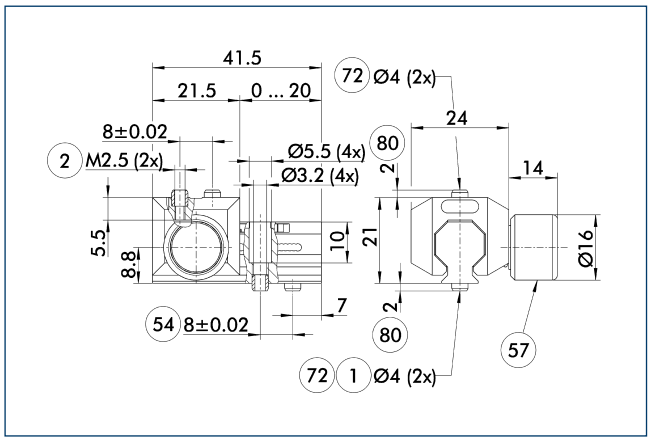

1 Gripper connection
2 Finger connection
54 Optional right or left connection
57 Locking
72 Fit for centering sleeves
80 Depth of the centering sleeve hole in the mating part

The universal intermediate jaw allows fast tool-free and reliable plugging and shifting of top jaws at the gripper.

Description	ID	Grid dimension [mm]
Universal intermediate jaw		
UZB 40	0300040	1
Finger blanks		
ABR-PGZN-plus 40	0300008	
SBR-PGZN-plus 40	0300018	

ABR- / SBR-PGZN-plus 40 finger blanks

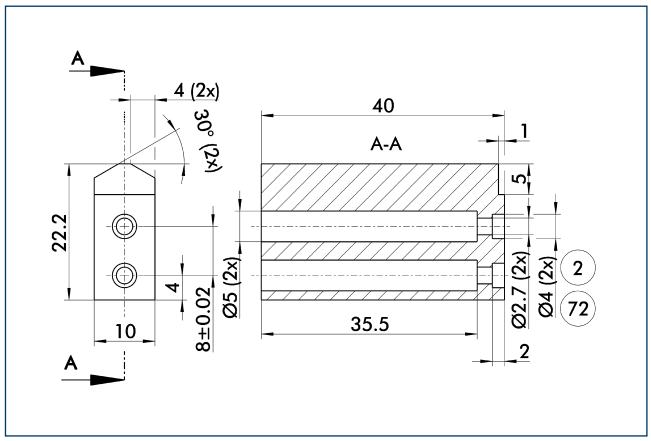

2 Finger connection
72 Fit for centering sleeves

Finger blanks for customized subsequent machining.

Description	ID	Material	Scope of delivery
Finger blanks			
ABR-PGZN-plus 40	0300008	Aluminum	1
SBR-PGZN-plus 40	0300018	16MnCr5	1

MMS electronic magnetic switches

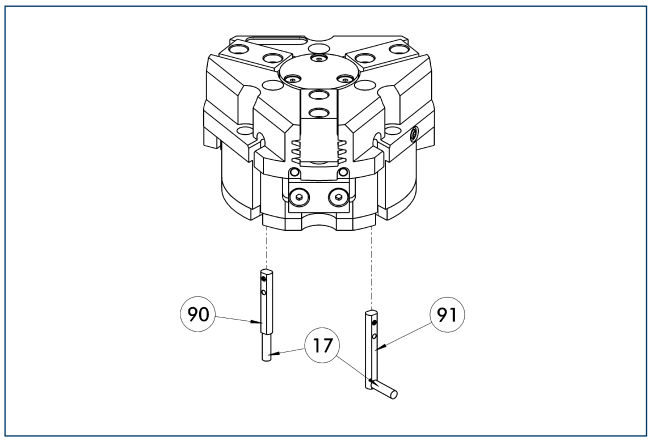

(17) Cable outlet
(91) MMS 22...-SA sensor
(90) MMS 22... sensor

End position monitoring for mounting in the C-slot.

Description	ID	Often combined
MMS electronic magnetic switches		
MMS 22-S-M8-PNP	0301032	●
MMSK 22-S-PNP	0301034	
MMS electronic magnetic switches with lateral cable outlet		
MMS 22-S-M8-PNP-SA	0301042	●
MMSK 22-S-PNP-SA	0301044	
Cable extensions		
KV BW08-SG08 3P-0030-PNP	0301495	
KV BW08-SG08 3P-0100-PNP	0301496	
KV BW08-SG08 3P-0200-PNP	0301497	●
Clip for plug / socket		
CLI-M8	0301463	
Connection cables		
KA BG08-L 3P-0300-PNP	0301622	●
KA BG08-L 3P-0500-PNP	0301623	
KA BW08-L 3P-0300-PNP	0301594	
KA BW08-L 3P-0500-PNP	0301502	
Sensor distributor		
V2-M8	0301775	●
V4-M8	0301746	
V8-M8	0301751	

ⓘ Two sensors (closer/S) are required for each unit, plus extension cables as an option. Please note the minimum permitted bending radii for the sensor cables, which are generally 35 mm.

MMS PI1 programmable magnetic switches

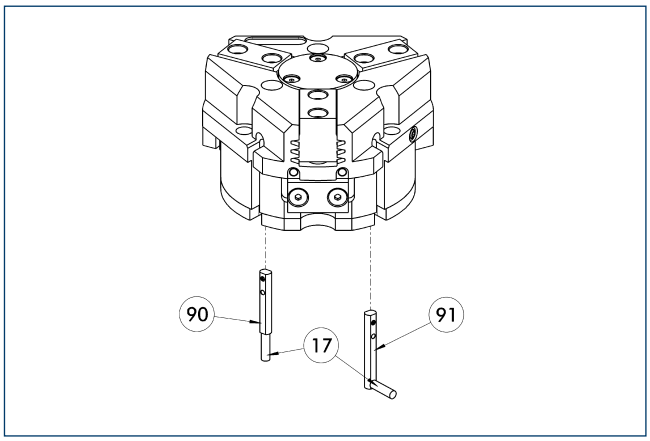

(17) Cable outlet
(91) MMS 22...-PI1-...-SA sensor
(90) MMS 22...-PI1-... sensor

Position query with one programmable position per sensor and electronics integrated in sensor. Programmable via MT magnet teaching tool (included in the scope of delivery) or ST plug teaching tool (optional). Limit position query mounted in C-groove. If the ST plug teaching tools are listed in the table, teaching can only take place with the ST plug teaching tools.

Description	ID	Often combined
Plug teaching tool		
ST-MMS 22-PI1-PNP	0301025	
MMS PI1 programmable magnetic switches		
MMS 22-PI1-S-M8-PNP	0301160	●
MMSK 22-PI1-S-PNP	0301162	
MMS PI1-HD programmable magnetic switches with stainless steel housing		
MMS 22-PI1-S-M8-PNP-HD	0301110	●
MMSK 22-PI1-S-PNP-HD	0301112	
MMS PI1 programmable magnetic switches with lateral cable outlet		
MMS 22-PI1-S-M8-PNP-SA	0301166	●
MMSK 22-PI1-S-PNP-SA	0301168	

ⓘ Two sensors (closer/S) are required for each unit, plus extension cables as an option. Please note the minimum permitted bending radii for the sensor cables, which are generally 35 mm. Connection cable, cable extensions, and sensor distributors can be found in the table for the MMS 22.

MMS PI2 programmable magnetic switches

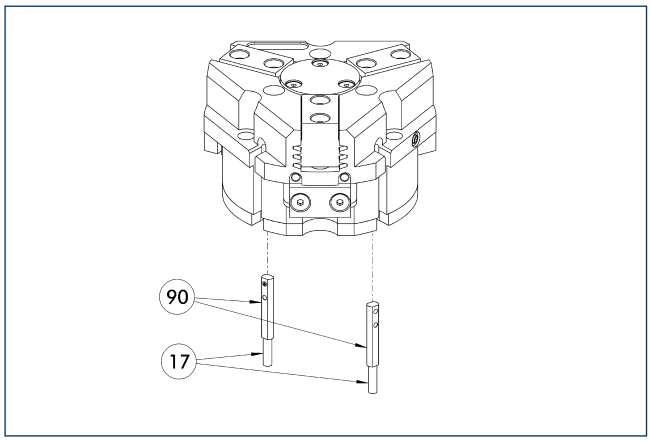

17 Cable outlet

90 MMS 22...-PI2-... sensor

Position query with two programmable positions per sensor and electronics integrated in sensor. Programmable via MT magnet teaching tool (included in the scope of delivery) or ST plug teaching tool (optional). Limit position query mounted in C-groove. If the ST plug teaching tools are listed in the table, teaching can only take place with the ST plug teaching tools.

Description	ID	Often combined
Plug teaching tool		
ST-MMS 22-PI2-PNP	0301026	
MMS PI2 programmable magnetic switches		
MMS 22-PI2-S-M8-PNP	0301180	●
MMSK 22-PI2-S-PNP	0301182	
MMS PI2-HD programmable magnetic switches with stainless steel housing		
MMS 22-PI2-S-M8-PNP-HD	0301130	●
MMSK 22-PI2-S-PNP-HD	0301132	

ⓘ Per unit one sensor (closer/S) is required, optionally a cable extension. Please note the minimum permitted bending radii for the sensor cables, which are generally 35 mm. Connection cable, cable extensions, and sensor distributors can be found in the table for the MMS-P 22.

MMS-P programmable magnetic switches

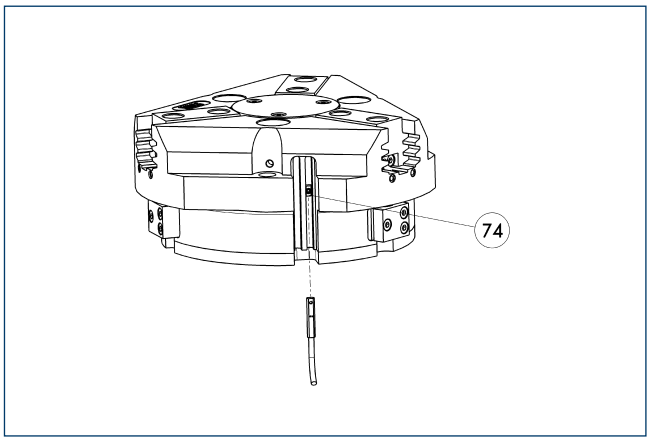

74 Stop for MMS-P

Position monitoring with two programmable positions per sensor. The end position monitoring is mounted in the C-slot.

Description	ID	Often combined
MMS-P programmable magnetic switches		
MMSK-P 22-S-PNP	0301371	
MMS-P 22-S-M8-PNP	0301370	●
Clip for plug / socket		
CLI-M8	0301463	
Connection cables		
KA BG08-L 4P-0500	0307767	●
KA BG08-L 4P-1000	0307768	
KA BW08-L 4P-0500	0307765	
KA BW08-L 4P-1000	0307766	
Sensor distributor		
V2-M8-4P-2XM8-3P	0301380	

ⓘ Per unit one sensor (closer/S) is required, optionally a cable extension. Please note the minimum permitted bending radii for the sensor cables, which are generally 35 mm.

PZN-plus 50

SCHUNK Grippers pneumatic | 3-Finger Centric Grippers | Universal Gripper

Gripping force, O.D. gripping

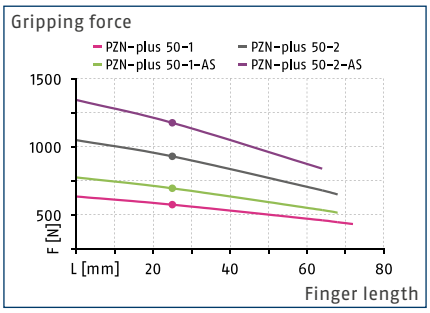

Gripping force, I.D. gripping

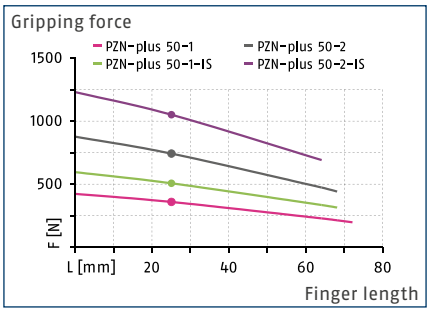

Finger load

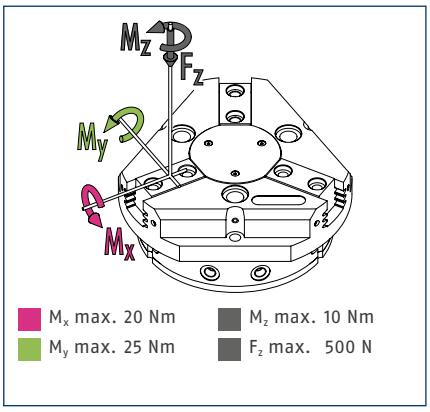

ⓘ The indicated moments and forces are static values, apply per base jaw and may occur simultaneously. M_y may arise in addition to the moment generated by the gripping force itself. If the max. permitted finger weight is exceeded, it is impreative to throttle the air supply so that the jaw movement occurs without any hitting or bouncing. Service life may be reduced.

Technical data

Description		PZN-plus 50-1	PZN-plus 50-2	PZN-plus 50-1-AS	PZN-plus 50-2-AS	PZN-plus 50-1-IS	PZN-plus 50-2-IS
ID		0303309	0303409	0303509	0303609	0303539	0303639
Stroke per jaw	[mm]	4	2	4	2	4	2
Closing- / opening force	[N]	325/355	680/740	445/-	925/-	-/505	-/1050
min. spring force	[N]			120	245	150	310
Weight	[kg]	0.27	0.27	0.35	0.35	0.35	0.35
Recommended workpiece weight	[kg]	1.65	3.4	1.65	3.4	1.65	3.4
Fluid consumption per double stroke	[cm³]	9	9	18	18	18	18
min. / max. operating pressure	[bar]	2/8	2/8	4/6.5	4/6.5	4/6.5	4/6.5
Nominal operating pressure	[bar]	6	6	6	6	6	6
Closing- / opening time	[s]	0.03/0.03	0.03/0.03	0.02/0.04	0.02/0.04	0.04/0.02	0.04/0.02
Closing- / opening time only with spring	[s]			0.08	0.08	0.08	0.08
max. permitted finger length	[mm]	72	68	68	64	68	64
max. permitted weight per finger	[kg]	0.18	0.18	0.18	0.18	0.18	0.18
IP class		40	40	40	40	40	40
min. / max. ambient temperature	[°C]	5/90	5/90	5/90	5/90	5/90	5/90
Repeat accuracy	[mm]	0.01	0.01	0.01	0.01	0.01	0.01
Cleanroom class ISO 14644-1		5	5	5	5	5	5
Options and their characteristics							
Dust-tight version		37303309	37303409	37303509	37303609	37303539	37303639
IP class		64	64	64	64	64	64
Weight	[kg]	0.33	0.33	0.41	0.41	0.41	0.41
Anti-corrosion version		38303309	38303409	38303509	38303609	38303539	38303639
High-temperature version		39303309	39303409	39303509	39303609	39303539	39303639
min. / max. ambient temperature	[°C]	5/130	5/130	5/130	5/130	5/130	5/130
Force intensified version		0372200	0372210	0372220		0372240	
Closing- / opening force	[N]	520/570	1090/1185	640/-		-/720	
Weight	[kg]	0.38	0.38	0.46		0.46	
Maximum pressure	[bar]	6	6	6		6	
max. permitted finger length	[mm]	64	50	50		50	
Precision version		0303339	0303439	0303489	0303589		

ⓘ The full gripping force according to the data table is only realised after around 100 gripping cycles.

Main view

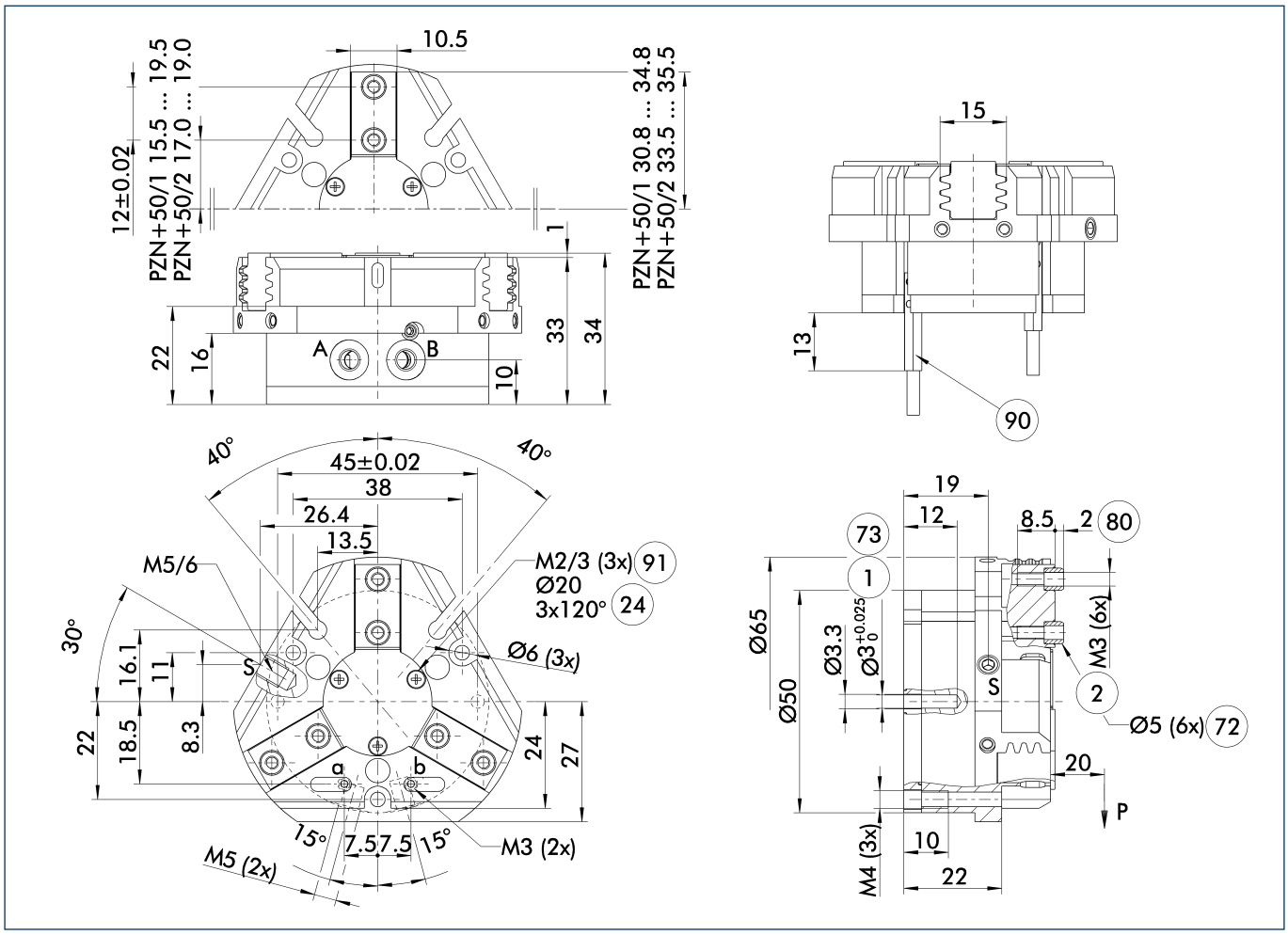

The drawing shows the gripper in the basic version with closed jaws, without dimensional consideration of the options described below.

ⓘ The SDV-P pressure maintenance valve can also be used for I.D. or O.D. gripping alternatively or in addition to the spring-loaded, mechanical gripping force maintenance device (see catalog section on "Accessories").

A, a Main / direct connection, gripper opening

B, b Main / direct connection, gripper closing

S Air purge connection (0.5 ... 1 bar)

(1) Gripper connection

(2) Finger connection

(24) Bolt circle

(72) Fit for centering sleeves

(73) Fit for centering pins

(80) Depth of the centering sleeve hole in the mating part

(90) MMS 22... sensor

(91) Thread below the cover for fastening external attachments

Hose-free direct connection M3

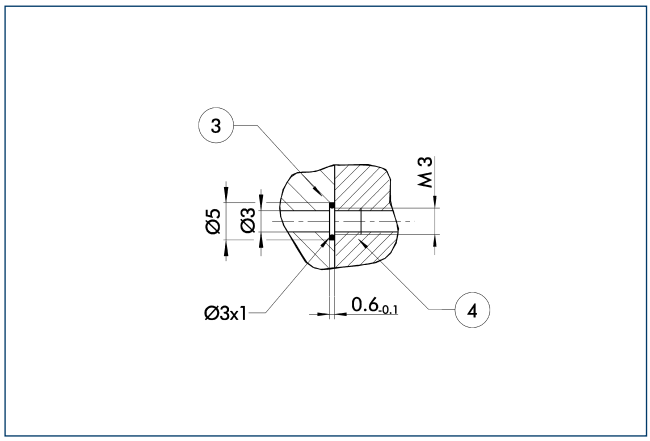

(3) Adapter (4) Gripper

The direct connection is used for supplying compressed air without hoses. Instead, the pressure medium is fed through bore-holes in the mounting plate.

Gripping force maintenance device AS / IS

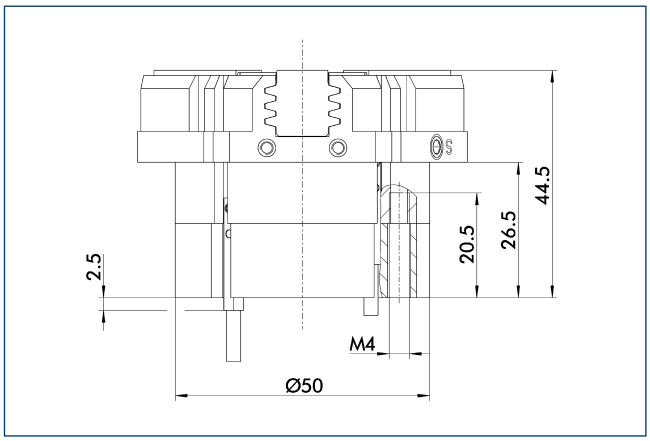

The mechanical maintenance of gripping force also assures a minimum gripping force in the case of a loss of pressure. With the AS / S variant, this acts as a closing force, and as an opening force for the IS variant. The maintenance of gripping force element can also be used as a means for increasing gripping force or for single actuated gripping.

Dust-tight version

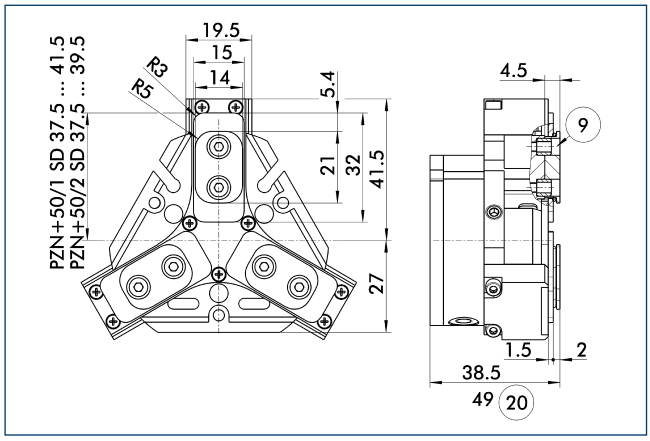

(9) For mounting screw connection diagram, see basic version (20) For AS / IS version

The "dust-protection" option increases the degree of protection against penetrating substances. The screw connection diagram shifts by the height of the intermediate jaw. The finger length is still measured from the upper edge of the gripper housing.

Force intensified version

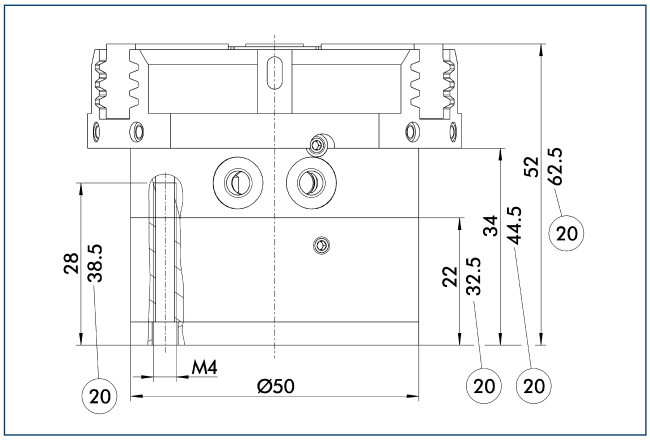

(20) For AS / IS version

The KVZ power booster cylinder increases gripping forces for opening and closing. A second piston connected in a series increases the force on the diagonal pull for this purpose. If applicable, observe the additional installation height for combination with an element for maintenance of gripping force. The force-intensifying version of the gripper can only be attached with screws from below via the provided mounting holes.

Precision version

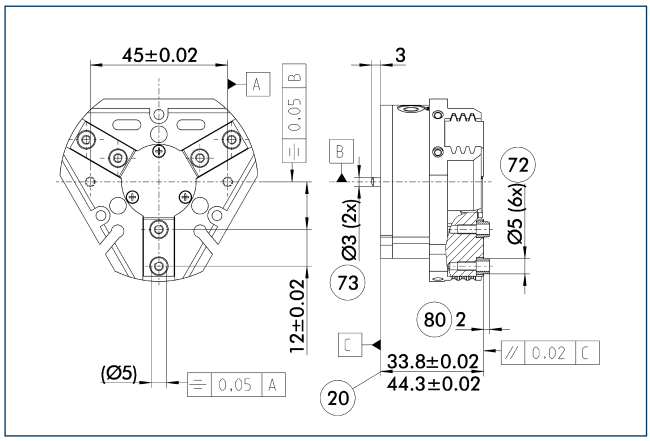

20 For AS / IS version
72 Fit for centering sleeves
73 Fit for centering pins
80 Depth of the centering sleeve hole in the mating part

The indicated tolerances just refer to the types of precision versions shown in the chart of technical specifications. All other types of precision versions are available on request.

Spring-loaded pressure piece

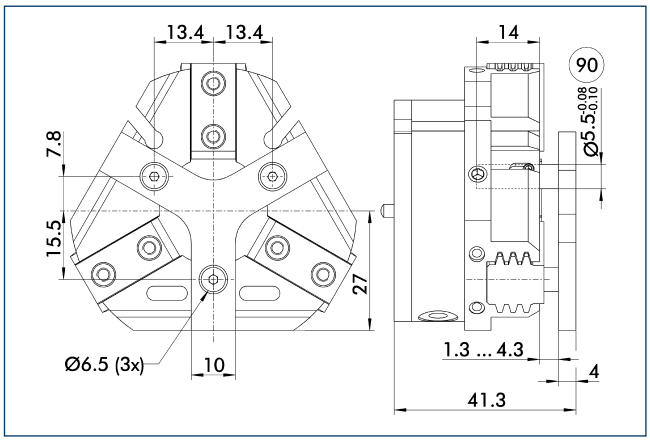

90 Guide pin

For spring-supported positioning of the workpiece against a stop after the gripper has opened. Especially developed for loading machines.

Description	ID	Stroke [mm]	Min. force [N]
Spring-loaded pressure piece			
A-PZN-plus 50	0303719	3	12

ⓘ The pressure piece cannot be combined with the dust-tight option. Please ask for details about a special pressure piece.

SDV-P pressure maintenance valve

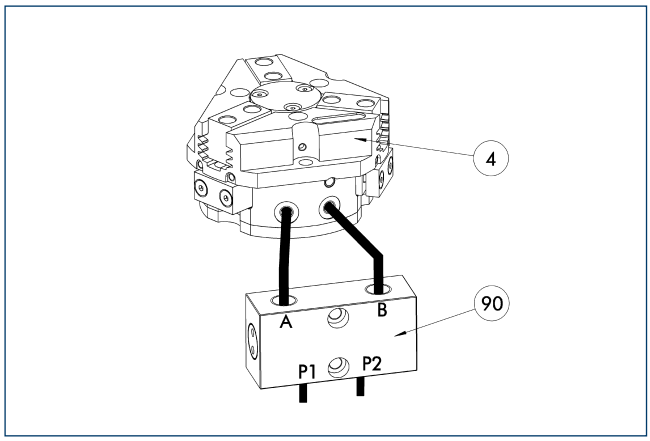

4 Gripper
90 SDV-P pressure maintenance valve

The SDV-P pressure maintenance valves ensure that the pressure in the piston chamber of pneumatic gripping, rotary, linear, and quick-change modules is maintained temporarily during an emergency stop.

Description	ID	
Pressure maintenance valve		
SDV-P 04	0403130	

Protective cocer HUE PZN-plus 50

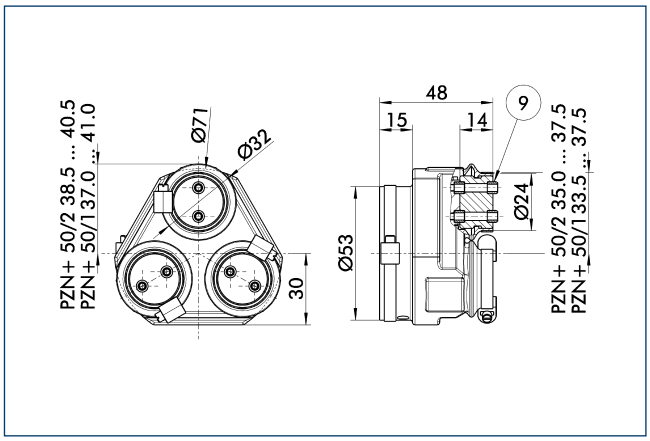

9 For mounting screw connection diagram, see basic version

The HUE protective cover completely protects the gripper against external influences up to IP65 if an additional sealing of the cover bottom is provided as part of the application. The mounting diagram shifts by the height of the intermediate jaw.

Description	ID	Cleanroom class ISO 14644-1	IP class
Protection cover			
HUE PZN-plus 50	0303479	2	65

BSWS jaw quick-change systems

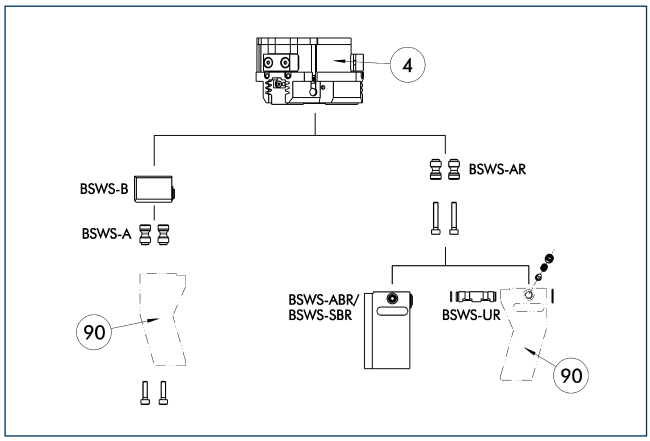

(4) Gripper

(90) Customized gripper fingers

There are various jaw quick-change systems available for the grippers. For detailed information, refer to the appropriate product.

Description	ID	
Jaw quick-change system adapter		
BSWS-AR 50	0300091	
BSWS-A 50	0303020	
Jaw quick-change system base		
BSWS-B 50	0303021	
Finger blanks with jaw quick-change system		
BSWS-ABR-PGZN-plus 50	0300071	
BSWS-SBR-PGZN-plus 50	0300081	
Jaw quick-change system reversed		
BSWS-UR 50	0302990	

ⓘ Only the systems listed in the table can be used.

ZBA L-plus 50 intermediate jaws

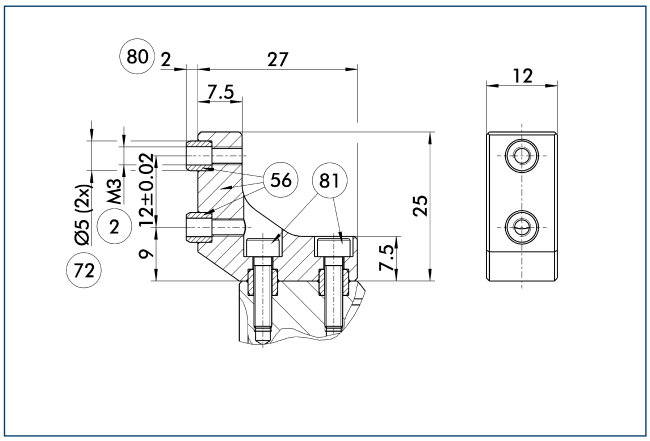

(2) Finger connection

(56) Included in delivery

(72) Fit for centering sleeves

(80) Depth of the centering sleeve hole in the mating part

(81) Not included in the scope of delivery

Optionally intermediate jaws can be used, enabling direct connection and alignment of top jaws and various standard accessories in Z-direction.

Description	ID	Material	Scope of delivery
Intermediate jaws			
ZBA-L-plus 50	0311712	Aluminum	1

UZB 50 universal intermediate jaw

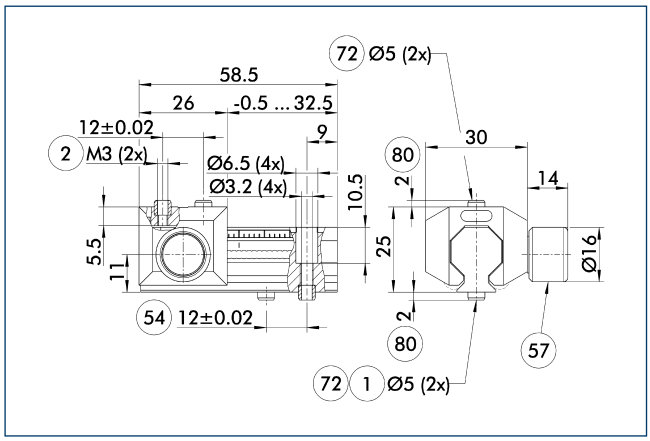

1 Gripper connection
2 Finger connection
54 Optional right or left connection
57 Locking
72 Fit for centering sleeves
80 Depth of the centering sleeve hole in the mating part

The universal intermediate jaw allows fast tool-free and reliable plugging and shifting of top jaws at the gripper.

Description	ID	Grid dimension [mm]
Universal intermediate jaw		
UZB 50	0300041	1.5
Finger blanks		
ABR-PGZN-plus 50	0300009	
SBR-PGZN-plus 50	0300019	

FMS-ZBA / ZBP 50 force-measuring jaws

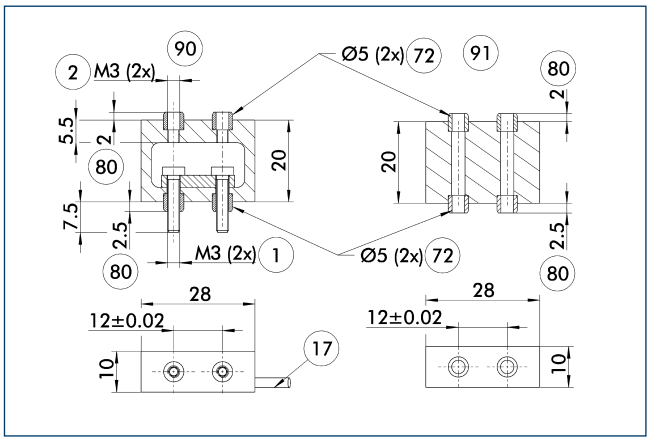

1 Gripper connection
2 Finger connection
17 Cable outlet
72 Fit for centering sleeves
80 Depth of the centering sleeve hole in the mating part
90 Active intermediate jaws
91 Passive intermediate jaws

Force measuring jaws measure gripping forces, but can also determine workpiece weights or dimensional deviations. There are active and passive intermediate jaws (FMS-ZBA or FMS-ZBP). At least one active force measuring jaw is required per gripper, the rest can be passive. For each active jaw, a FMS-A control unit and a FMS-AK connection cable are required.

Description	ID	Often combined
Active intermediate jaws		
FMS-ZBA 50	0301830	
Passive intermediate jaws		
FMS-ZBP 50	0301831	
Connection cables		
FMS-AK0200	0301820	●
FMS-AK0500	0301821	
FMS-AK1000	0301822	
FMS-AK2000	0301823	
Electronic processor		
FMS-A1	0301810	

ABR- / SBR-PGZN-plus 50 finger blanks

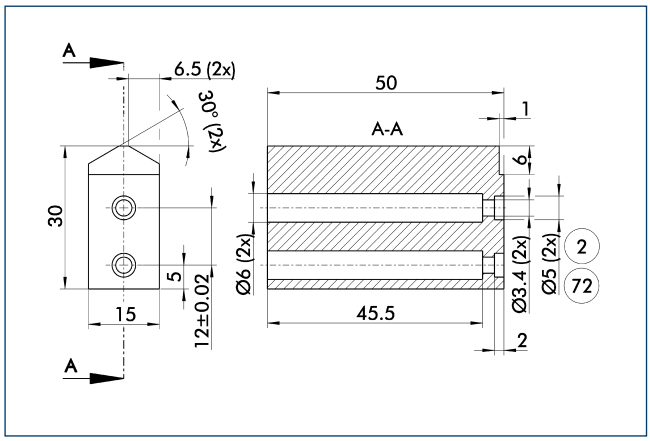

(2) Finger connection (72) Fit for centering sleeves

Finger blanks for customized subsequent machining.

Description	ID	Material	Scope of delivery
Finger blanks			
ABR-PGZN-plus 50	0300009	Aluminum	1
SBR-PGZN-plus 50	0300019	16MnCr5	1

Modular assembly automation

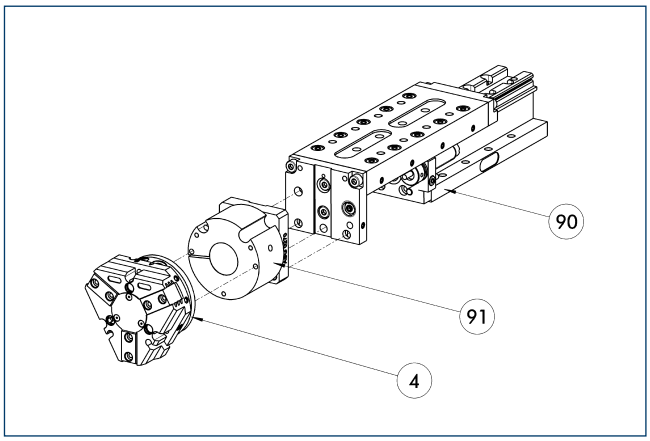

(4) Gripper (91) ASG adapter plate

(90) CLM / KLM / LM / ELM / ELS / HLM linear module

Gripper and linear modules can be combined with standard adapters out of the modular assembly system. For more information see our catalog “Modular Assembly Automation”.

MMS electronic magnetic switches

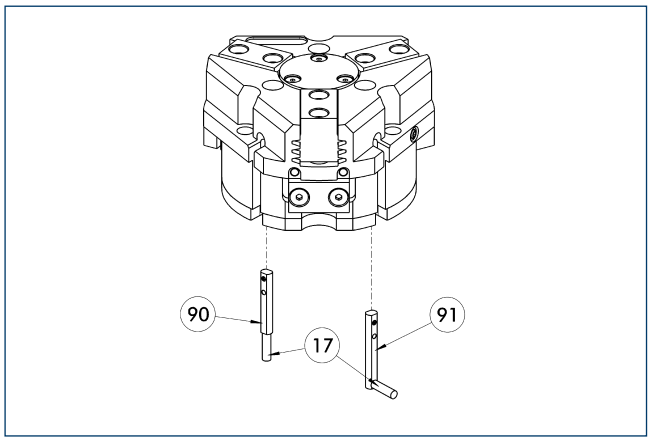

(17) Cable outlet
(91) MMS 22...-SA sensor
(90) MMS 22... sensor

End position monitoring for mounting in the C-slot.

Description	ID	Often combined
MMS electronic magnetic switches		
MMS 22-S-M8-PNP	0301032	●
MMSK 22-S-PNP	0301034	
MMS electronic magnetic switches with lateral cable outlet		
MMS 22-S-M8-PNP-SA	0301042	●
MMSK 22-S-PNP-SA	0301044	
Cable extensions		
KV BW08-SG08 3P-0030-PNP	0301495	
KV BW08-SG08 3P-0100-PNP	0301496	
KV BW08-SG08 3P-0200-PNP	0301497	●
Clip for plug / socket		
CLI-M8	0301463	
Connection cables		
KA BG08-L 3P-0300-PNP	0301622	●
KA BG08-L 3P-0500-PNP	0301623	
KA BW08-L 3P-0300-PNP	0301594	
KA BW08-L 3P-0500-PNP	0301502	
Sensor distributor		
V2-M8	0301775	●
V4-M8	0301746	
V8-M8	0301751	

ⓘ Two sensors (closer/S) are required for each unit, plus extension cables as an option. Please note the minimum permitted bending radii for the sensor cables, which are generally 35 mm.

MMS PI1 programmable magnetic switches

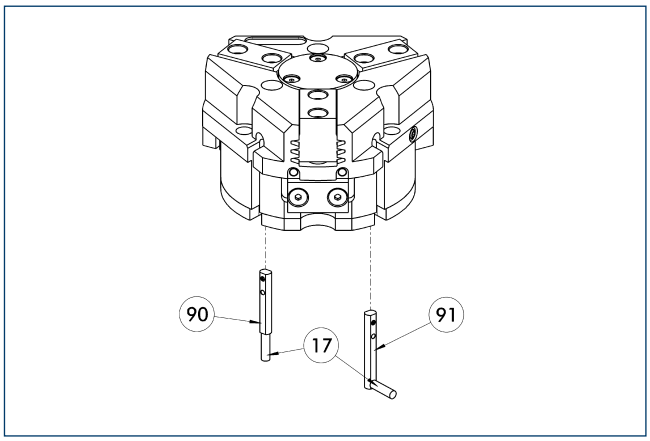

(17) Cable outlet
(91) MMS 22...-PI1-...-SA sensor
(90) MMS 22...-PI1-... sensor

Position query with one programmable position per sensor and electronics integrated in sensor. Programmable via MT magnet teaching tool (included in the scope of delivery) or ST plug teaching tool (optional). Limit position query mounted in C-groove. If the ST plug teaching tools are listed in the table, teaching can only take place with the ST plug teaching tools.

Description	ID	Often combined
Plug teaching tool		
ST-MMS 22-PI1-PNP	0301025	
MMS PI1 programmable magnetic switches		
MMS 22-PI1-S-M8-PNP	0301160	●
MMSK 22-PI1-S-PNP	0301162	
MMS PI1-HD programmable magnetic switches with stainless steel housing		
MMS 22-PI1-S-M8-PNP-HD	0301110	●
MMSK 22-PI1-S-PNP-HD	0301112	
MMS PI1 programmable magnetic switches with lateral cable outlet		
MMS 22-PI1-S-M8-PNP-SA	0301166	●
MMSK 22-PI1-S-PNP-SA	0301168	

ⓘ Two sensors (closer/S) are required for each unit, plus extension cables as an option. Please note the minimum permitted bending radii for the sensor cables, which are generally 35 mm. Connection cable, cable extensions, and sensor distributors can be found in the table for the MMS 22.

MMS PI2 programmable magnetic switches

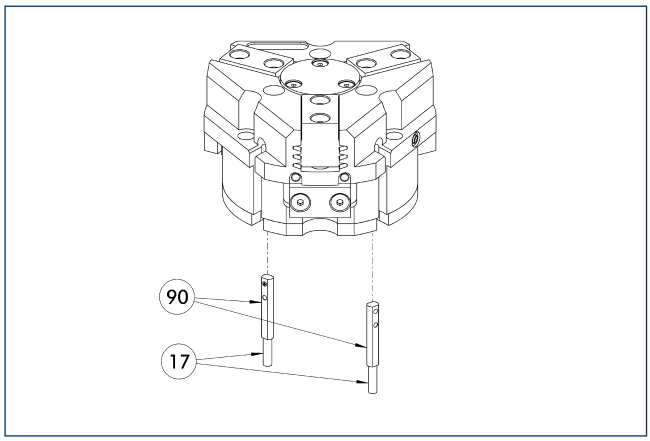

17 Cable outlet

90 MMS 22...-PI2-... sensor

Position query with two programmable positions per sensor and electronics integrated in sensor. Programmable via MT magnet teaching tool (included in the scope of delivery) or ST plug teaching tool (optional). Limit position query mounted in C-groove. If the ST plug teaching tools are listed in the table, teaching can only take place with the ST plug teaching tools.

Description	ID	Often combined
Plug teaching tool		
ST-MMS 22-PI2-PNP	0301026	
MMS PI2 programmable magnetic switches		
MMS 22-PI2-S-M8-PNP	0301180	●
MMSK 22-PI2-S-PNP	0301182	
MMS PI2-HD programmable magnetic switches with stainless steel housing		
MMS 22-PI2-S-M8-PNP-HD	0301130	●
MMSK 22-PI2-S-PNP-HD	0301132	

ⓘ Per unit one sensor (closer/S) is required, optionally a cable extension. Please note the minimum permitted bending radii for the sensor cables, which are generally 35 mm. Connection cable, cable extensions, and sensor distributors can be found in the table for the MMS-P 22.

MMS-P programmable magnetic switches

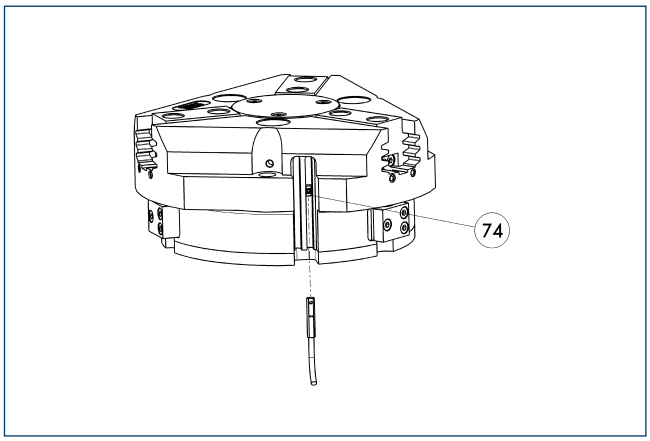

74 Stop for MMS-P

Position monitoring with two programmable positions per sensor. The end position monitoring is mounted in the C-slot.

Description	ID	Often combined
MMS-P programmable magnetic switches		
MMSK-P 22-S-PNP	0301371	
MMS-P 22-S-M8-PNP	0301370	●
Clip for plug / socket		
CLI-M8	0301463	
Connection cables		
KA BG08-L 4P-0500	0307767	●
KA BG08-L 4P-1000	0307768	
KA BW08-L 4P-0500	0307765	
KA BW08-L 4P-1000	0307766	
Sensor distributor		
V2-M8-4P-2XM8-3P	0301380	

ⓘ Per unit one sensor (closer/S) is required, optionally a cable extension. Please note the minimum permitted bending radii for the sensor cables, which are generally 35 mm.

PZN-plus 64

SCHUNK Grippers pneumatic | 3-Finger Centric Grippers | Universal Gripper

Gripping force, O.D. gripping

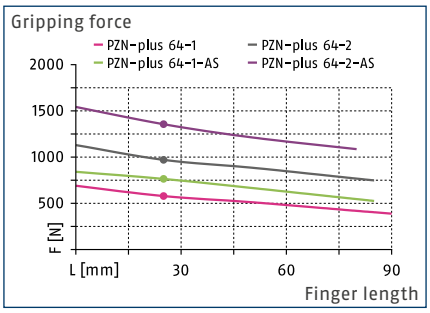

Gripping force, I.D. gripping

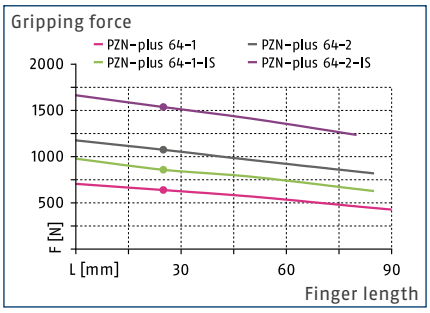

Finger load

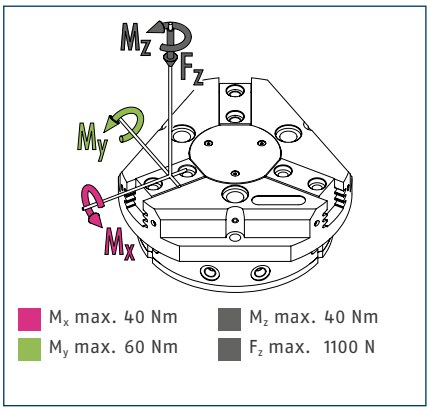

ⓘ The indicated moments and forces are static values, apply per base jaw and may occur simultaneously. M_y may arise in addition to the moment generated by the gripping force itself. If the max. permitted finger weight is exceeded, it is impreative to throttle the air supply so that the jaw movement occurs without any hitting or bouncing. Service life may be reduced.

Technical data

Description		PZN-plus 64-1	PZN-plus 64-2	PZN-plus 64-1-AS	PZN-plus 64-2-AS	PZN-plus 64-1-IS	PZN-plus 64-2-IS
ID		0303310	0303410	0303510	0303610	0303540	0303640
Stroke per jaw	[mm]	6	3	6	3	6	3
Closing- / opening force	[N]	580/640	970/1075	765/-	1285/-	-/860	-/1535
min. spring force	[N]			185	315	220	460
Weight	[kg]	0.43	0.43	0.54	0.54	0.54	0.54
Recommended workpiece weight	[kg]	2.9	4.85	2.9	4.85	2.9	4.85
Fluid consumption per double stroke	[cm³]	25	25	48	48	48	48
min. / max. operating pressure	[bar]	2/8	2/8	4/6.5	4/6.5	4/6.5	4/6.5
Nominal operating pressure	[bar]	6	6	6	6	6	6
Closing- / opening time	[s]	0.03/0.03	0.03/0.03	0.02/0.04	0.02/0.04	0.04/0.02	0.04/0.02
Closing- / opening time only with spring	[s]			0.08	0.08	0.08	0.08
max. permitted finger length	[mm]	90	85	85	80	85	80
max. permitted weight per finger	[kg]	0.35	0.35	0.35	0.35	0.35	0.35
IP class		40	40	40	40	40	40
min. / max. ambient temperature	[°C]	5/90	5/90	5/90	5/90	5/90	5/90
Repeat accuracy	[mm]	0.01	0.01	0.01	0.01	0.01	0.01
Cleanroom class ISO 14644-1		5	5	5	5	5	5
Options and their characteristics							
Dust-tight version		37303310	37303410	37303510	37303610	37303540	37303640
IP class		64	64	64	64	64	64
Weight	[kg]	0.6	0.6	0.71	0.71	0.71	0.71
Anti-corrosion version		38303310	38303410	38303510	38303610	38303540	38303640
High-temperature version		39303310	39303410	39303510	39303610	39303540	39303640
min. / max. ambient temperature	[°C]	5/130	5/130	5/130	5/130	5/130	5/130
Force intensified version		0372201	0372211	0372221		0372241	
Closing- / opening force	[N]	1045/1150	1745/1935	1230/-		-/1370	
Weight	[kg]	0.7	0.7	0.8		0.8	
Maximum pressure	[bar]	6	6	6		6	
max. permitted finger length	[mm]	80	64	64		64	
Precision version		0303340	0303440	0303490	0303590		

ⓘ The full gripping force according to the data table is only realised after around 100 gripping cycles.

Main view

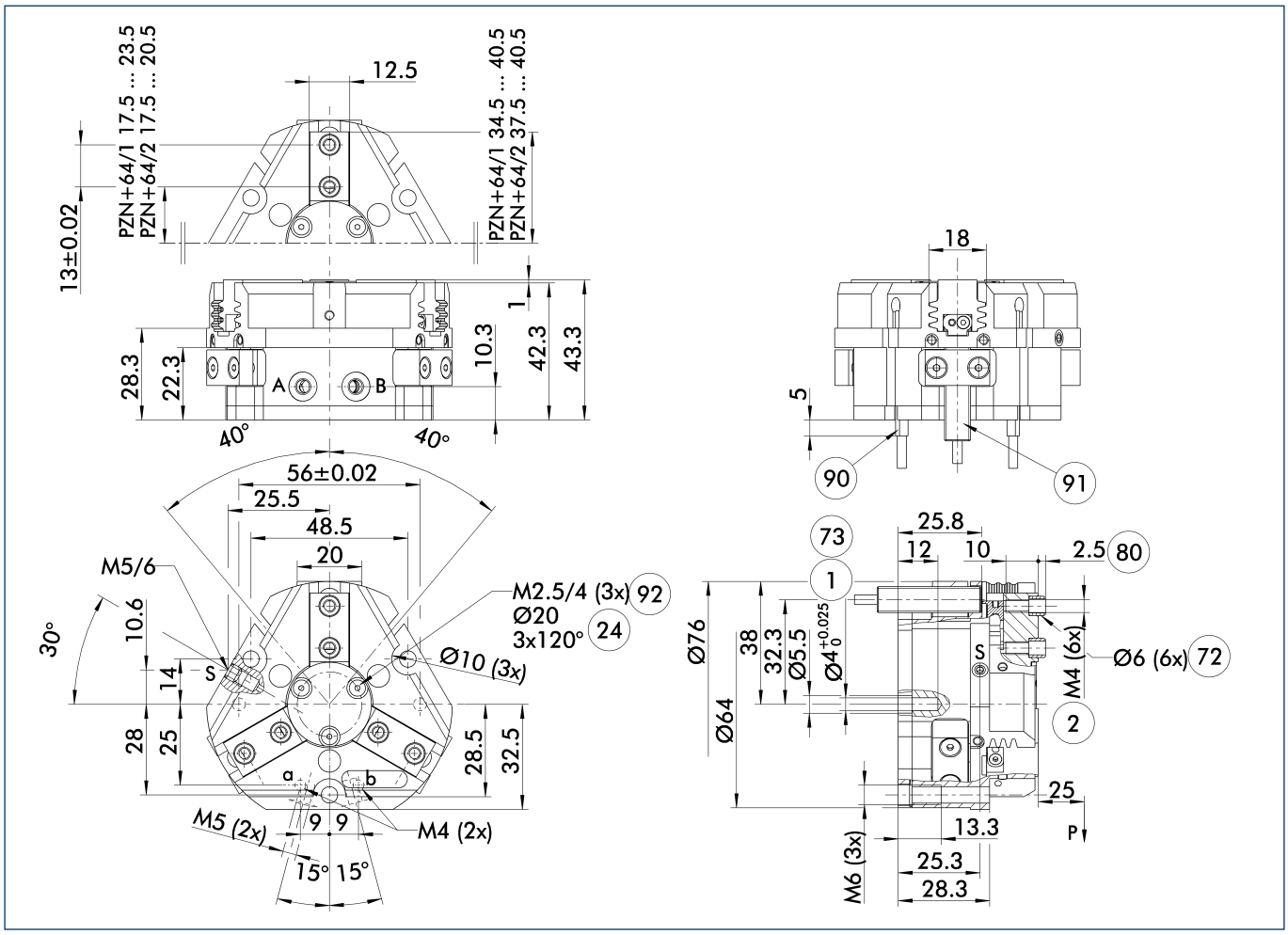

The drawing shows the gripper in the basic version with closed jaws, without dimensional consideration of the options described below.

ⓘ The SDV-P pressure maintenance valve can also be used for I.D. or O.D. gripping alternatively or in addition to the spring-loaded, mechanical gripping force maintenance device (see catalog section on "Accessories").

A, a Main / direct connection, gripper opening

B, b Main / direct connection, gripper closing

S Air purge connection (0.5 ... 1 bar)

(1) Gripper connection

(2) Finger connection

(24) Bolt circle

(72) Fit for centering sleeves

(73) Fit for centering pins

(80) Depth of the centering sleeve hole in the mating part

(90) MMS 22... sensor

(91) IN ... sensor

(92) Thread below the cover for fastening external attachments

Hose-free direct connection M4

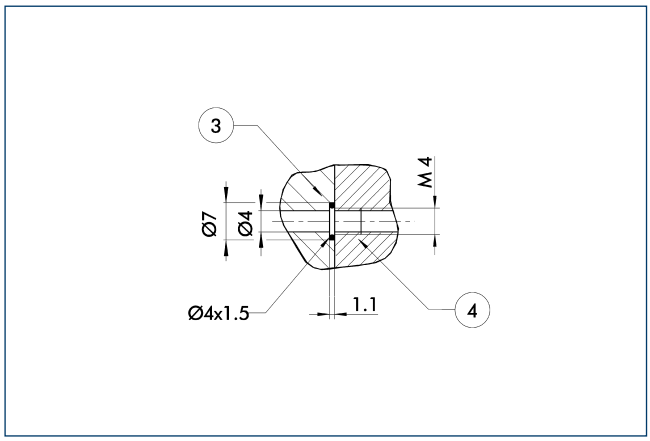

(3) Adapter (4) Gripper

The direct connection is used for supplying compressed air without hoses. Instead, the pressure medium is fed through bore-holes in the mounting plate.

Gripping force maintenance device AS / IS

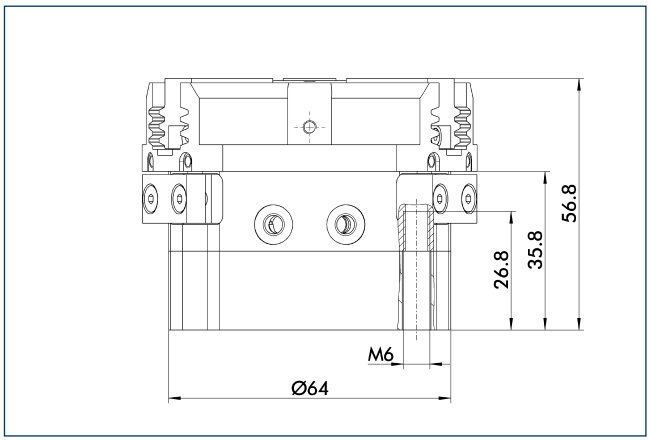

The mechanical maintenance of gripping force also assures a minimum gripping force in the case of a loss of pressure. With the AS / S variant, this acts as a closing force, and as an opening force for the IS variant. The maintenance of gripping force element can also be used as a means for increasing gripping force or for single actuated gripping.

Dust-tight version

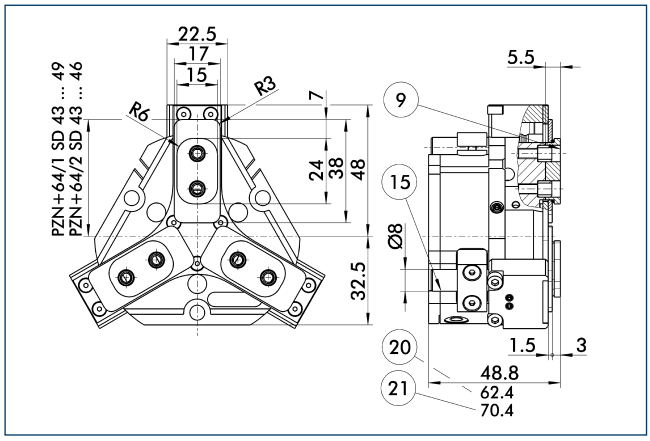

(9) For mounting screw connection diagram, see basic version
(15) Sealing bolt
(20) For AS / IS version
(21) For KVZ version

The "dust-protection" option increases the degree of protection against penetrating substances. The screw connection diagram shifts by the height of the intermediate jaw. The finger length is still measured from the upper edge of the gripper housing.

Force intensified version

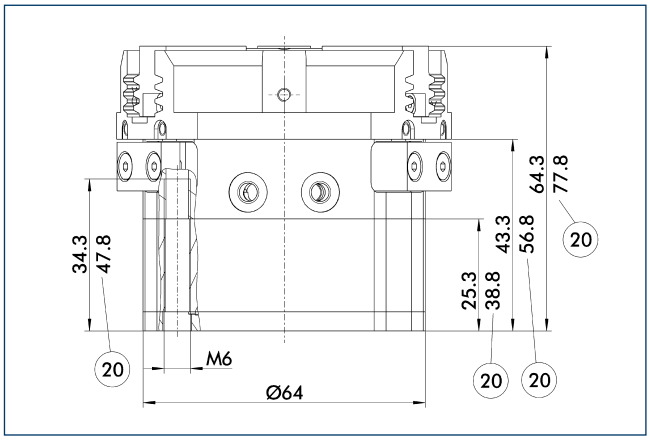

(20) For AS / IS version

The KVZ power booster cylinder increases gripping forces for opening and closing. A second piston connected in a series increases the force on the diagonal pull for this purpose. If applicable, observe the additional installation height for combination with an element for maintenance of gripping force. The force-intensifying version of the gripper can only be attached with screws from below via the provided mounting holes.

Precision version

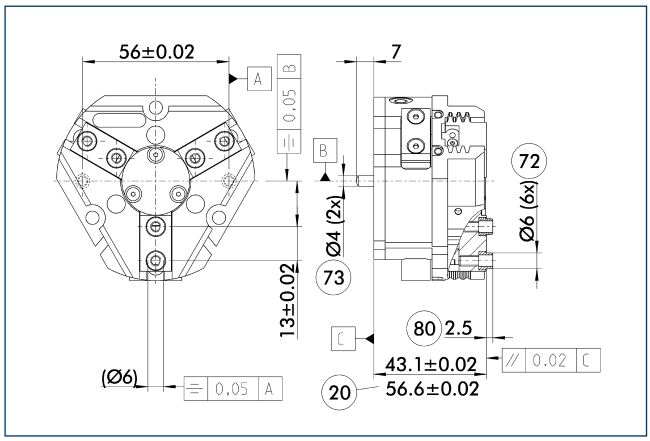

20 For AS / IS version
72 Fit for centering sleeves
73 Fit for centering pins
80 Depth of the centering sleeve hole in the mating part

The indicated tolerances just refer to the types of precision versions shown in the chart of technical specifications. All other types of precision versions are available on request.

Spring-loaded pressure piece

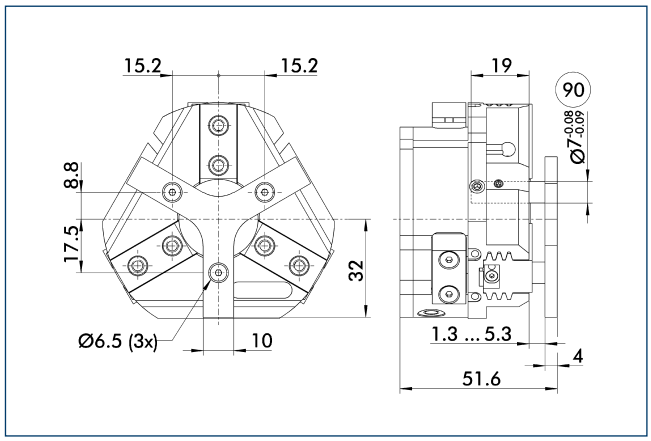

90 Guide pin

For spring-supported positioning of the workpiece against a stop after the gripper has opened. Especially developed for loading machines.

Description	ID	Stroke [mm]	Min. force [N]
Spring-loaded pressure piece			
A-PZN-plus/DPZ-plus 64	0303720	4	11

ⓘ The pressure piece cannot be combined with the dust-tight option. Please ask for details about a special pressure piece.

SDV-P pressure maintenance valve

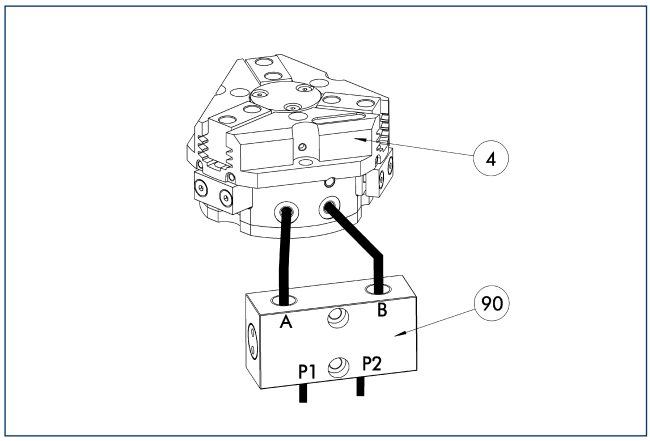

4 Gripper
90 SDV-P pressure maintenance valve

The SDV-P pressure maintenance valves ensure that the pressure in the piston chamber of pneumatic gripping, rotary, linear, and quick-change modules is maintained temporarily during an emergency stop.

Description	ID	
Pressure maintenance valve		
SDV-P 07	0403131	

HUE PZN-plus 64 protective cover

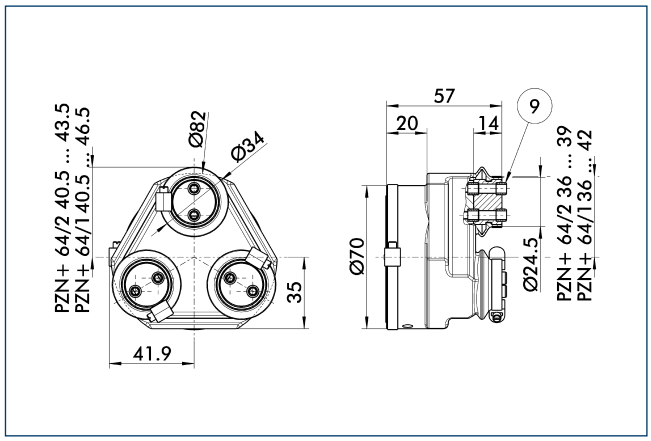

9 For mounting screw connection diagram, see basic version

The HUE protective cover completely protects the gripper against external influences up to IP65 if an additional sealing of the cover bottom is provided as part of the application. The mounting diagram shifts by the height of the intermediate jaw.

Description	ID	Cleanroom class ISO 14644-1	IP class
Protection cover			
HUE PZN-plus 64	0303480	2	65

BSWS jaw quick-change systems

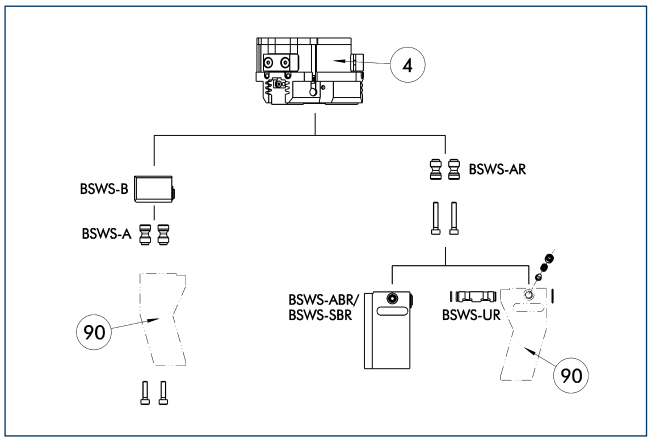

(4) Gripper

(90) Customized gripper fingers

There are various jaw quick-change systems available for the grippers. For detailed information, refer to the appropriate product.

Description	ID	
Jaw quick-change system adapter		
BSWS-AR 64	0300092	
BSWS-A 64	0303022	
Jaw quick-change system base		
BSWS-B 64	0303023	
Finger blanks with jaw quick-change system		
BSWS-ABR-PGZN-plus 64	0300072	
BSWS-SBR-PGZN-plus 64	0300082	
Jaw quick-change system reversed		
BSWS-UR 64	0302991	

ⓘ Only the systems listed in the table can be used.

ZBA L-plus 64 intermediate jaws

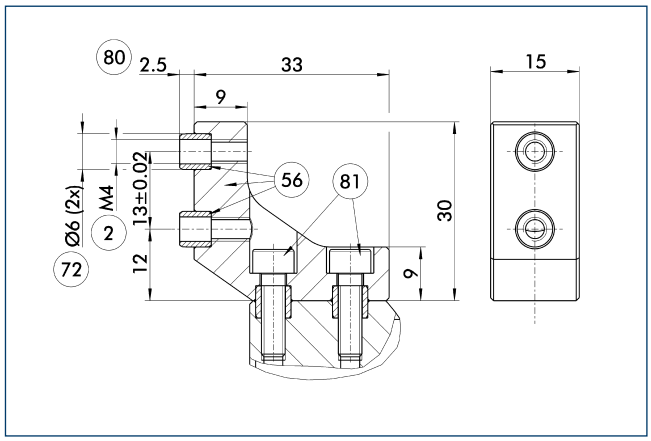

(2) Finger connection

(56) Included in delivery

(72) Fit for centering sleeves

(80) Depth of the centering sleeve hole in the mating part

(81) Not included in the scope of delivery

Optionally intermediate jaws can be used, enabling direct connection and alignment of top jaws and various standard accessories in Z-direction.

Description	ID	Material	Scope of delivery
Intermediate jaws			
ZBA-L-plus 64	0311722	Aluminum	1

UZB 64 universal intermediate jaw

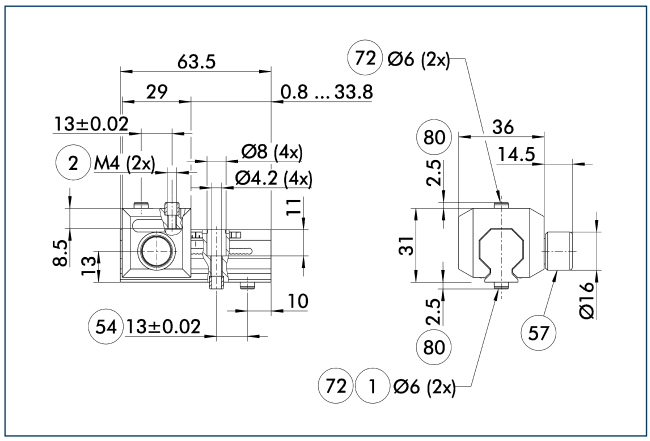

1 Gripper connection
2 Finger connection
54 Optional right or left connection
57 Locking
72 Fit for centering sleeves
80 Depth of the centering sleeve hole in the mating part

The universal intermediate jaw allows fast tool-free and reliable plugging and shifting of top jaws at the gripper.

Description	ID	Grid dimension [mm]
Universal intermediate jaw		
UZB 64	0300042	1.5
Finger blanks		
ABR-PGZN-plus 64	0300010	
SBR-PGZN-plus 64	0300020	

FMS-ZBA / ZBP 64 force-measuring jaws

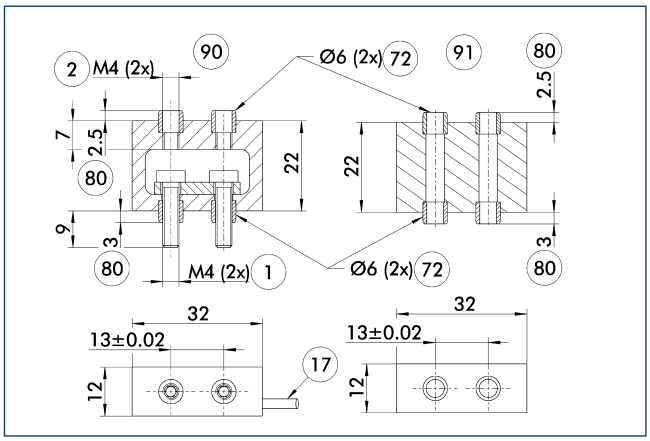

1 Gripper connection
2 Finger connection
17 Cable outlet
72 Fit for centering sleeves
80 Depth of the centering sleeve hole in the mating part
90 Active intermediate jaws
91 Passive intermediate jaws

Force measuring jaws measure gripping forces, but can also determine workpiece weights or dimensional deviations. There are active and passive intermediate jaws (FMS-ZBA or FMS-ZBP). At least one active force measuring jaw is required per gripper, the rest can be passive. For each active jaw, a FMS-A control unit and a FMS-AK connection cable are required.

Description	ID	Often combined
Active intermediate jaws		
FMS-ZBA 64	0301832	
Passive intermediate jaws		
FMS-ZBP 64	0301833	
Connection cables		
FMS-AK0200	0301820	●
FMS-AK0500	0301821	
FMS-AK1000	0301822	
FMS-AK2000	0301823	
Electronic processor		
FMS-A1	0301810	

ABR- / SBR-PGZN-plus 64 finger blanks

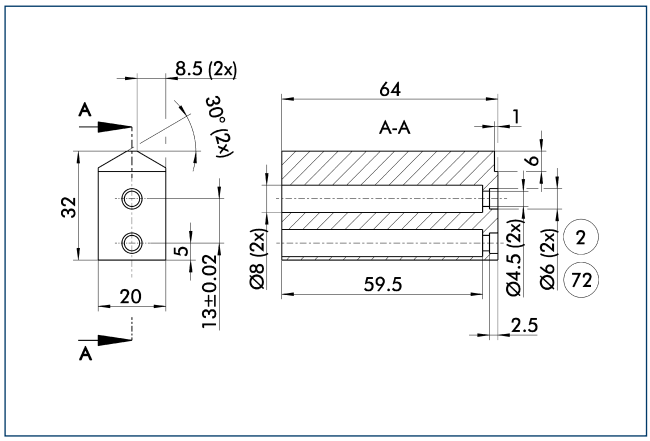

(2) Finger connection (72) Fit for centering sleeves

Finger blanks for customized subsequent machining.

Description	ID	Material	Scope of delivery
Finger blanks			
ABR-PGZN-plus 64	0300010	Aluminum	1
SBR-PGZN-plus 64	0300020	16MnCr5	1

Modular assembly automation

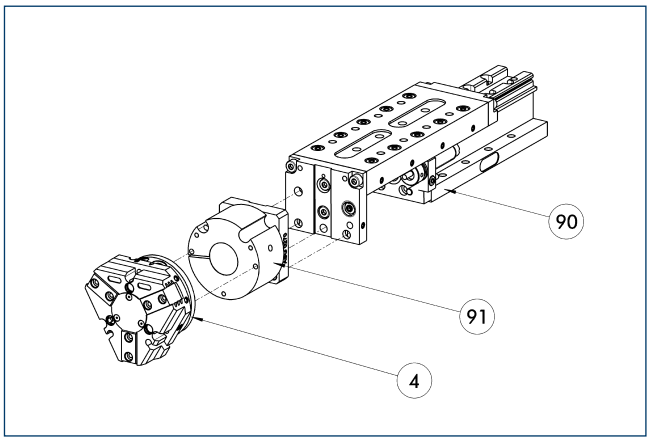

(4) Gripper (91) ASG adapter plate

(90) CLM / KLM / LM / ELM / ELS / HLM linear module

Gripper and linear modules can be combined with standard adapters out of the modular assembly system. For more information see our catalog "Modular Assembly Automation".

Inductive proximity switches

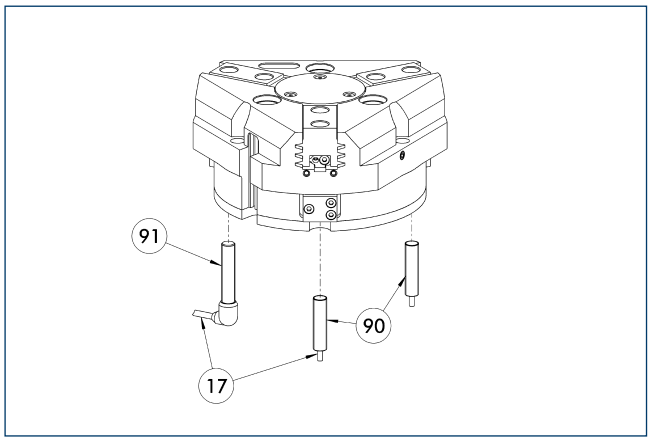

(17) Cable outlet
(90) IN ... sensor
(91) IN ...-SA sensor

Directly mounted limit position monitor.

Description	ID	Often combined
Inductive proximity switches		
IN 80-S-M12	0301578	
IN 80-S-M8	0301478	●
IN-C 80-S-M8	0301475	
INK 80-S	0301550	
Inductive proximity switches with lateral outlet		
IN 80-S-M12-SA	0301587	
IN 80-S-M8-SA	0301483	●
INK 80-S-SA	0301566	
Cable extensions		
KV BG12-SG12 3P-0030-PNP	0301999	
KV BG12-SG12 3P-0060-PNP	0301998	
KV BW08-SG08 3P-0030-PNP	0301495	
KV BW08-SG08 3P-0100-PNP	0301496	
KV BW08-SG08 3P-0200-PNP	0301497	●
KV BW12-SG12 3P-0030-PNP	0301595	
KV BW12-SG12 3P-0100-PNP	0301596	
KV BW12-SG12 3P-0200-PNP	0301597	
Clip for plug / socket		
CLI-M12	0301464	
CLI-M8	0301463	
Connection cables		
KA BG08-L 3P-0300-PNP	0301622	●
KA BG08-L 3P-0500-PNP	0301623	
KA BG12-L 3P-0500-PNP	30016369	
KA BW08-L 3P-0300-PNP	0301594	
KA BW08-L 3P-0500-PNP	0301502	
KA BW12-L 3P-0300-PNP	0301503	
KA BW12-L 3P-0500-PNP	0301507	
Sensor distributor		
V2-M8	0301775	●
V2-M12	0301776	●
V4-M12	0301747	

ⓘ Two sensors (closer/S) are required for each unit, plus extension cables as an option. Please note the minimum permitted bending radii for the sensor cables, which are generally 35 mm.

Flexible position sensor

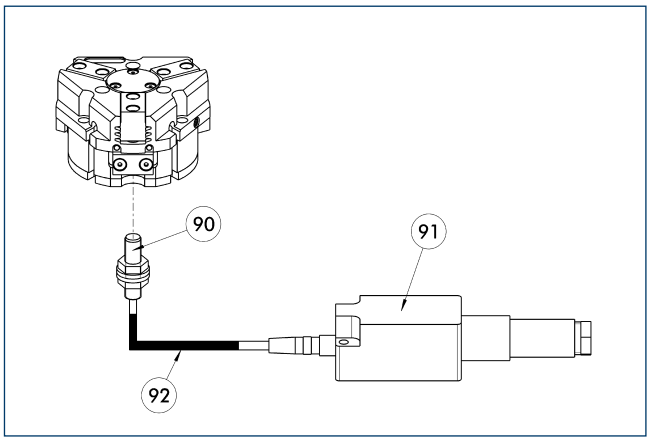

(90) FPS-S sensor
(91) FPS-F5 / -F5 T electronic processor
(92) Cable extensions

Flexible position monitoring of up to five positions.

Description	ID	Often combined
Mounting kit for FPS		
AS-FPS-PGZN-plus 64-1/80-2	0301630	
Electronic processor		
FPS-F5	0301805	●
FPS-F5 T	0301807	
Sensor		
FPS-S M8	0301704	
Clip for plug / socket		
CLI-M8	0301463	

ⓘ When using a FPS system, a FPS sensor (FPS-S) and a control unit (FPS-F5 / F5 T) are required for each gripper as well as a mounting kit (AS), if listed. Cable extensions (KV) are available as options in the "Accessories" catalog section.

MMS electronic magnetic switches

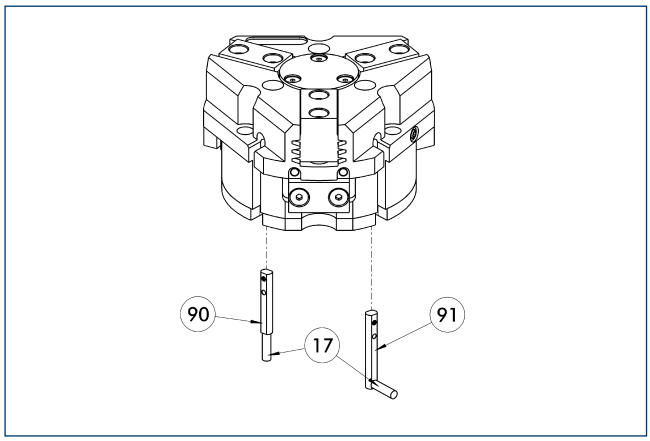

(17) Cable outlet
(91) MMS 22...-SA sensor
(90) MMS 22... sensor

End position monitoring for mounting in the C-slot.

Description	ID	Often combined
MMS electronic magnetic switches		
MMS 22-S-M8-PNP	0301032	●
MMSK 22-S-PNP	0301034	
MMS electronic magnetic switches with lateral cable outlet		
MMS 22-S-M8-PNP-SA	0301042	●
MMSK 22-S-PNP-SA	0301044	
Cable extensions		
KV BW08-SG08 3P-0030-PNP	0301495	
KV BW08-SG08 3P-0100-PNP	0301496	
KV BW08-SG08 3P-0200-PNP	0301497	●
Clip for plug / socket		
CLI-M8	0301463	
Connection cables		
KA BG08-L 3P-0300-PNP	0301622	●
KA BG08-L 3P-0500-PNP	0301623	
KA BW08-L 3P-0300-PNP	0301594	
KA BW08-L 3P-0500-PNP	0301502	
Sensor distributor		
V2-M8	0301775	●
V4-M8	0301746	
V8-M8	0301751	

ⓘ Two sensors (closer/S) are required for each unit, plus extension cables as an option. Please note the minimum permitted bending radii for the sensor cables, which are generally 35 mm.

MMS PI1 programmable magnetic switches

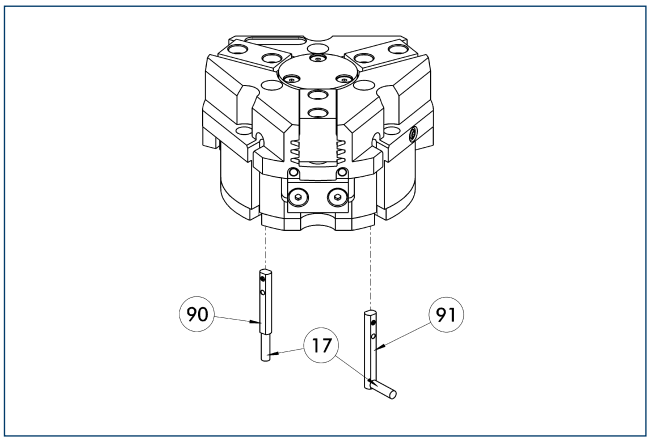

(17) Cable outlet
(91) MMS 22...-PI1-...-SA sensor
(90) MMS 22...-PI1-... sensor

Position query with one programmable position per sensor and electronics integrated in sensor. Programmable via MT magnet teaching tool (included in the scope of delivery) or ST plug teaching tool (optional). Limit position query mounted in C-groove. If the ST plug teaching tools are listed in the table, teaching can only take place with the ST plug teaching tools.

Description	ID	Often combined
Plug teaching tool		
ST-MMS 22-PI1-PNP	0301025	
MMS PI1 programmable magnetic switches		
MMS 22-PI1-S-M8-PNP	0301160	●
MMSK 22-PI1-S-PNP	0301162	
MMS PI1-HD programmable magnetic switches with stainless steel housing		
MMS 22-PI1-S-M8-PNP-HD	0301110	●
MMSK 22-PI1-S-PNP-HD	0301112	
MMS PI1 programmable magnetic switches with lateral cable outlet		
MMS 22-PI1-S-M8-PNP-SA	0301166	●
MMSK 22-PI1-S-PNP-SA	0301168	

ⓘ Two sensors (closer/S) are required for each unit, plus extension cables as an option. Please note the minimum permitted bending radii for the sensor cables, which are generally 35 mm. Connection cable, cable extensions, and sensor distributors can be found in the table for the MMS 22.

MMS PI2 programmable magnetic switches

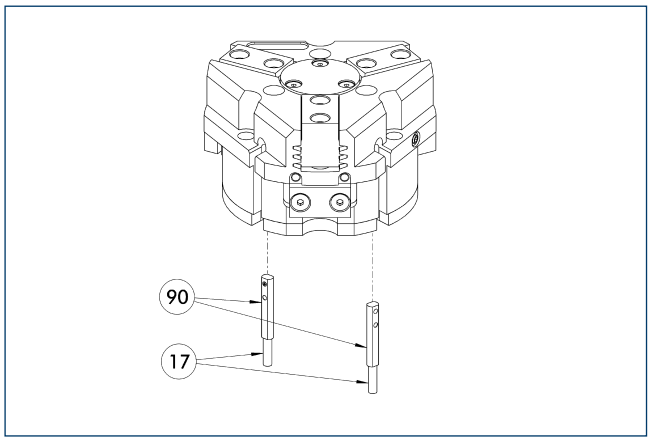

(17) Cable outlet (90) MMS 22...-PI2-... sensor

Position query with two programmable positions per sensor and electronics integrated in sensor. Programmable via MT magnet teaching tool (included in the scope of delivery) or ST plug teaching tool (optional). Limit position query mounted in C-groove. If the ST plug teaching tools are listed in the table, teaching can only take place with the ST plug teaching tools.

Description	ID	Often combined
Plug teaching tool		
ST-MMS 22-PI2-PNP	0301026	
MMS PI2 programmable magnetic switches		
MMS 22-PI2-S-M8-PNP	0301180	●
MMSK 22-PI2-S-PNP	0301182	
MMS PI2-HD programmable magnetic switches with stainless steel housing		
MMS 22-PI2-S-M8-PNP-HD	0301130	●
MMSK 22-PI2-S-PNP-HD	0301132	

ⓘ Per unit one sensor (closer/S) is required, optionally a cable extension. Please note the minimum permitted bending radii for the sensor cables, which are generally 35 mm. Connection cable, cable extensions, and sensor distributors can be found in the table for the MMS-P 22.

MMS-P programmable magnetic switches

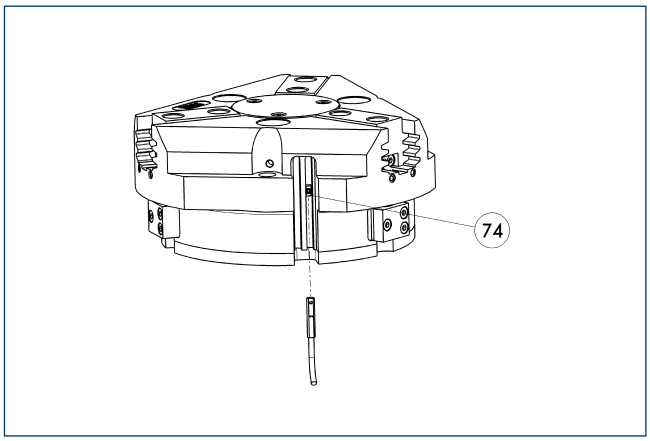

(74) Stop for MMS-P

Position monitoring with two programmable positions per sensor. The end position monitoring is mounted in the C-slot.

Description	ID	Often combined
MMS-P programmable magnetic switches		
MMSK-P 22-S-PNP	0301371	
MMS-P 22-S-M8-PNP	0301370	●
Clip for plug / socket		
CLI-M8	0301463	
Connection cables		
KA BG08-L 4P-0500	0307767	●
KA BG08-L 4P-1000	0307768	
KA BW08-L 4P-0500	0307765	
KA BW08-L 4P-1000	0307766	
Sensor distributor		
V2-M8-4P-2XM8-3P	0301380	

ⓘ Per unit one sensor (closer/S) is required, optionally a cable extension. Please note the minimum permitted bending radii for the sensor cables, which are generally 35 mm.

APS-Z80 analog position sensor

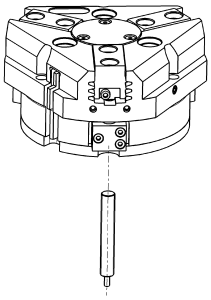

Contactlessly measuring, analog multi-position monitoring for any number of positions.

Description	ID	Often combined
Mounting kit for APS-Z80		
AS-APS-Z80-PGZN-plus 64-1	0302105	
AS-APS-Z80-PGZN-plus 64-2	0302106	
Sensor		
APS-Z80-K	0302072	
APS-Z80-M8	0302070	●

ⓘ When using an APS system, one mounting kit (AS-APS-Z80) and one APS-Z80 sensor is required per gripper.

APS-M1 analog position sensor

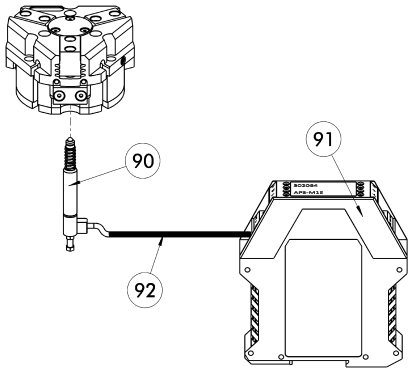

(90) APS-M1S sensor
(91) APS-M1E electronic processor
(92) APS-K extension cable

Analog multi position monitoring for any desired positions.

Description	ID	Often combined
Mounting kit for APS-M1		
AS-APS-M1-PGZN-plus 64-1	0302075	
AS-APS-M1-PGZN-plus 64-2	0302076	
Connection cables		
APS-K0200	0302066	●
APS-K0700	0302068	
Electronic processor		
APS-M1E	0302064	
Sensor		
APS-M1S	0302062	

ⓘ When using an APS system, for each gripper a mounting kit (AS-APS-M1), an APS-M1S sensor (incl. 3 m cable) as well as an electronics (APS-M1e) are required. An extension cable (APS-K) can be connected between the sensor and the electronics as an option. The max. cable length between the sensor and the electronics is 10 m, between the electronics and their control unit (PLC) it is max. 1 m.

Cylindrical reed switches

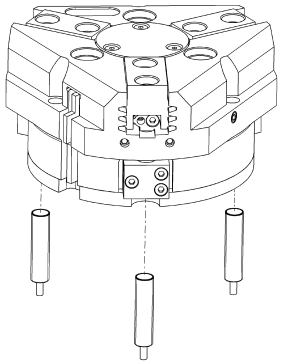

Limit position monitor can be mounted with mounting kit.

Description	ID	
Mounting kit for proximity switch		
AS-RMS 80 PGN/PZN-plus 64/80	0377725	
Reed switches		
RMS 80-S-M8	0377721	

ⓘ Two sensors (closer/S) are required for each unit, plus extension cables as an option. This mounting kit needs to be ordered optionally as an accessory. Two mounting kits are required per gripper. Please note the minimum permitted bending radii for the sensor cables, which are generally 35 mm.

PZN-plus 80

SCHUNK Grippers pneumatic | 3-Finger Centric Grippers | Universal Gripper

Gripping force, O.D. gripping

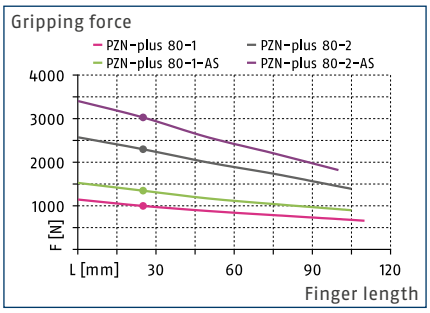

Gripping force, I.D. gripping

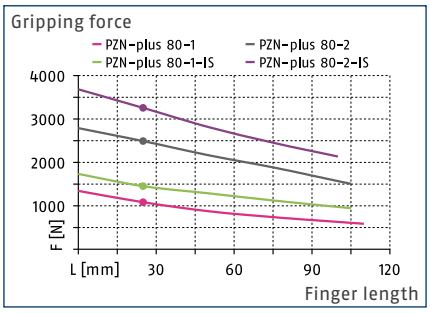

Finger load

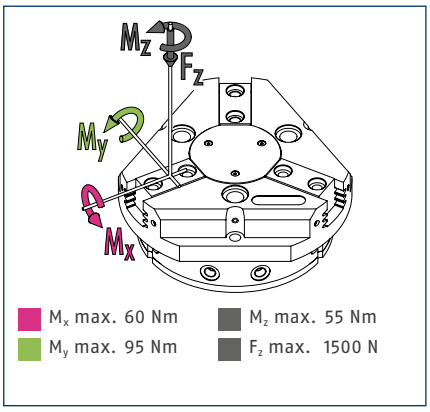

ⓘ The indicated moments and forces are static values, apply per base jaw and may occur simultaneously. M_y may arise in addition to the moment generated by the gripping force itself. If the max. permitted finger weight is exceeded, it is impreative to throttle the air supply so that the jaw movement occurs without any hitting or bouncing. Service life may be reduced.

Technical data

Description		PZN-plus 80-1	PZN-plus 80-2	PZN-plus 80-1-AS	PZN-plus 80-2-AS	PZN-plus 80-1-IS	PZN-plus 80-2-IS
ID		0303311	0303411	0303511	0303611	0303541	0303641
Stroke per jaw	[mm]	8	4	8	4	8	4
Closing- / opening force	[N]	1000/1080	2300/2490	1350/-	3030/-	-/1450	-/3250
min. spring force	[N]			350	730	370	760
Weight	[kg]	0.79	0.79	0.96	0.96	0.96	0.96
Recommended workpiece weight	[kg]	5	11.5	5	11.5	5	11.5
Fluid consumption per double stroke	[cm³]	60	60	108	108	108	108
min. / max. operating pressure	[bar]	2/8	2/8	4/6.5	4/6.5	4/6.5	4/6.5
Nominal operating pressure	[bar]	6	6	6	6	6	6
Closing- / opening time	[s]	0.05/0.05	0.05/0.05	0.03/0.05	0.03/0.05	0.06/0.04	0.06/0.04
Closing- / opening time only with spring	[s]			0.19	0.19	0.19	0.19
max. permitted finger length	[mm]	110	105	105	100	105	100
max. permitted weight per finger	[kg]	0.6	0.6	0.6	0.6	0.6	0.6
IP class		40	40	40	40	40	40
min. / max. ambient temperature	[°C]	5/90	5/90	5/90	5/90	5/90	5/90
Repeat accuracy	[mm]	0.01	0.01	0.01	0.01	0.01	0.01
Cleanroom class ISO 14644-1		5	5	5	5	5	5
Options and their characteristics							
Dust-tight version		37303311	37303411	37303511	37303611	37303541	37303641
IP class		64	64	64	64	64	64
Weight	[kg]	1	1	1.17	1.17	1.17	1.17
Anti-corrosion version		38303311	38303411	38303511	38303611	38303541	38303641
High-temperature version		39303311	39303411	39303511	39303611	39303541	39303641
min. / max. ambient temperature	[°C]	5/130	5/130	5/130	5/130	5/130	5/130
Force intensified version		0372202	0372212	0372222		0372242	
Closing- / opening force	[N]	1800/1945	4140/4480	2150/-		-/2315	
Weight	[kg]	1.2	1.2	1.4		1.4	
Maximum pressure	[bar]	6	6	6		6	
max. permitted finger length	[mm]	100	80	80		80	
Precision version		0303341	0303441	0303491	0303591		

ⓘ The full gripping force according to the data table is only realised after around 100 gripping cycles.

Main view

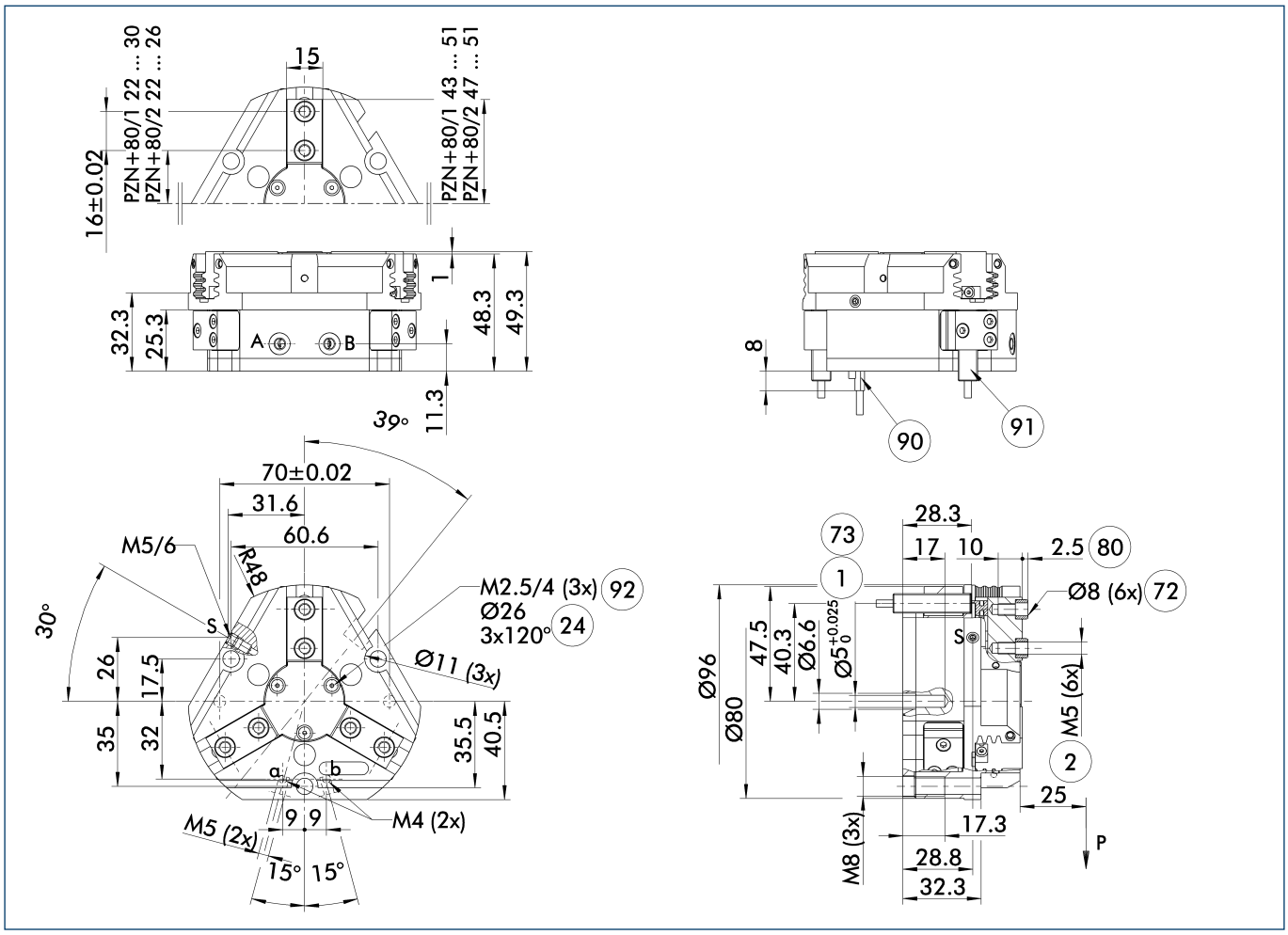

The drawing shows the gripper in the basic version with closed jaws, without dimensional consideration of the options described below.

ⓘ The SDV-P pressure maintenance valve can also be used for I.D. or O.D. gripping alternatively or in addition to the spring-loaded, mechanical gripping force maintenance device (see catalog section on "Accessories").

A, a Main / direct connection, gripper opening

B, b Main / direct connection, gripper closing

S Air purge connection (0.5 ... 1 bar)

(1) Gripper connection

(2) Finger connection

(24) Bolt circle

(72) Fit for centering sleeves

(73) Fit for centering pins

(80) Depth of the centering sleeve hole in the mating part

(90) MMS 22... sensor

(91) IN ... sensor

(92) Thread below the cover for fastening external attachments

Hose-free direct connection M4

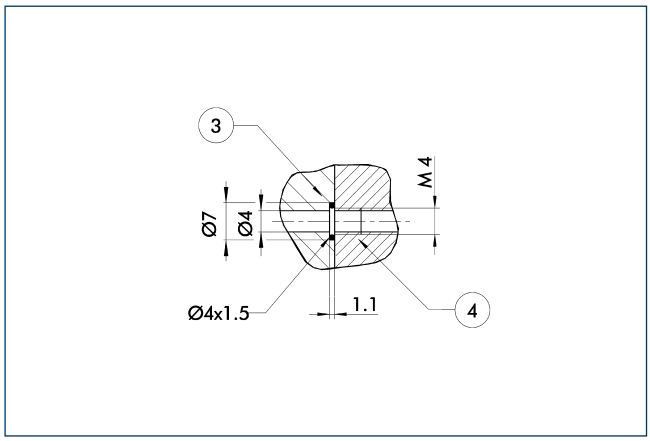

(3) Adapter (4) Gripper

The direct connection is used for supplying compressed air without hoses. Instead, the pressure medium is fed through bore-holes in the mounting plate.

Gripping force maintenance device AS / IS

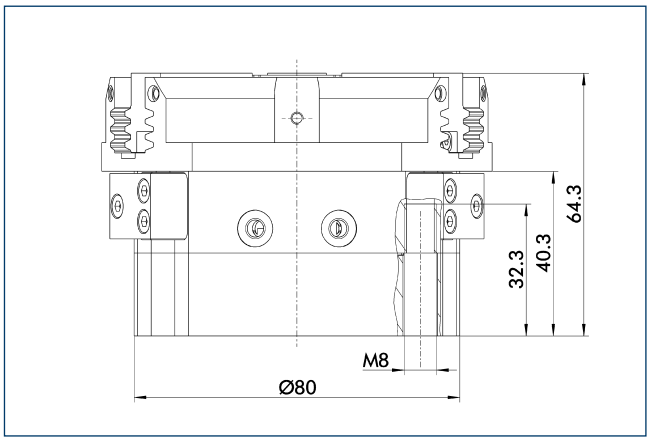

The mechanical maintenance of gripping force also assures a minimum gripping force in the case of a loss of pressure. With the AS / S variant, this acts as a closing force, and as an opening force for the IS variant. The maintenance of gripping force element can also be used as a means for increasing gripping force or for single actuated gripping.

Dust-tight version

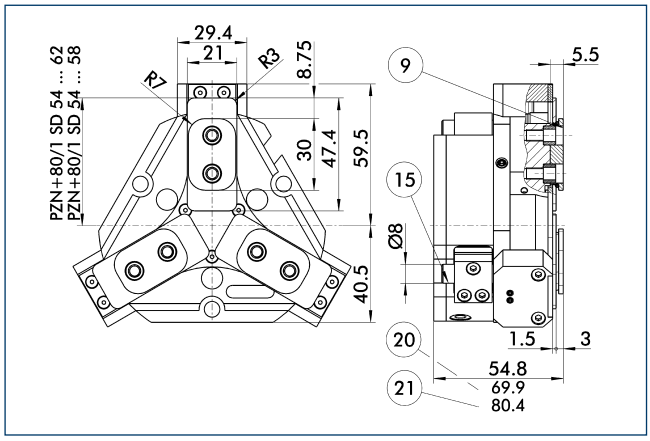

(9) For mounting screw connection diagram, see basic version
(15) Sealing bolt
(20) For AS / IS version
(21) For KVZ version

The "dust-protection" option increases the degree of protection against penetrating substances. The screw connection diagram shifts by the height of the intermediate jaw. The finger length is still measured from the upper edge of the gripper housing.

Force intensified version

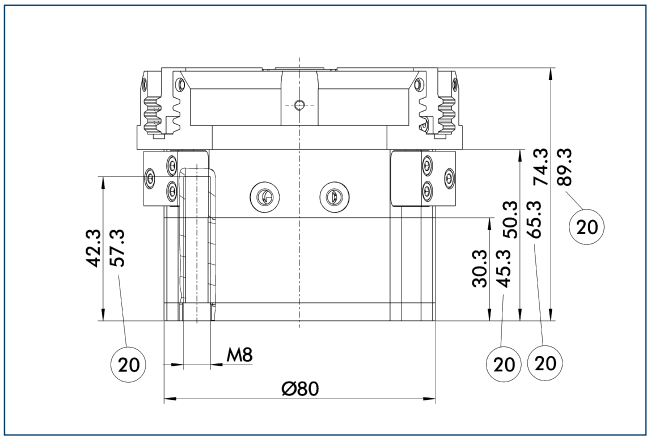

(20) For AS / IS version

The KVZ power booster cylinder increases gripping forces for opening and closing. A second piston connected in a series increases the force on the diagonal pull for this purpose. If applicable, observe the additional installation height for combination with an element for maintenance of gripping force. The force-intensifying version of the gripper can only be attached with screws from below via the provided mounting holes.

Precision version

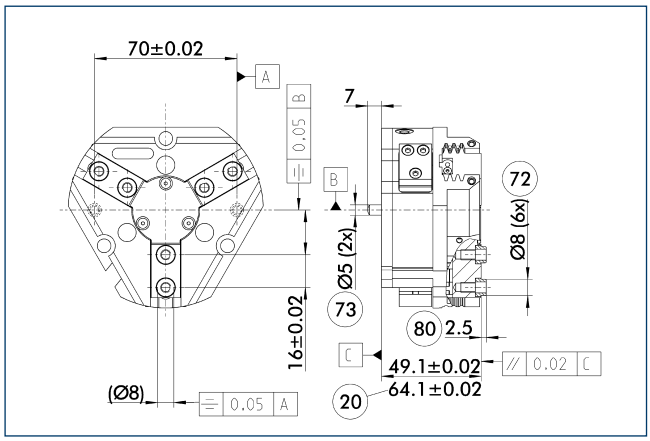

(20) For AS / IS version
(72) Fit for centering sleeves
(73) Fit for centering pins
(80) Depth of the centering sleeve hole in the mating part

The indicated tolerances just refer to the types of precision versions shown in the chart of technical specifications. All other types of precision versions are available on request.

Spring-loaded pressure piece

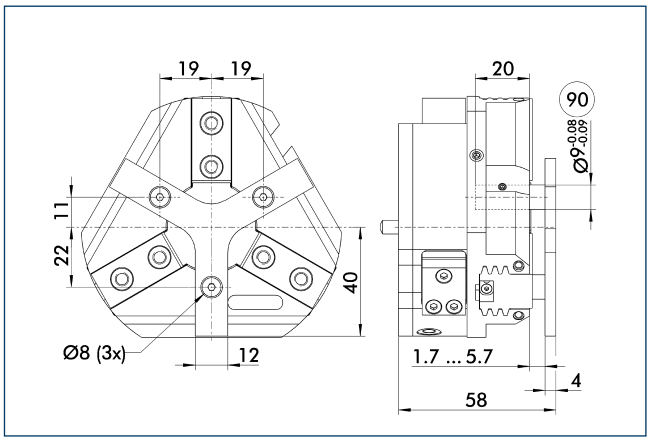

(90) Guide pin

For spring-supported positioning of the workpiece against a stop after the gripper has opened. Especially developed for loading machines.

Description	ID	Stroke [mm]	Min. force [N]
Spring-loaded pressure piece			
A-PZN-plus/DPZ-plus 80	0303721	4	18

ⓘ The pressure piece cannot be combined with the dust-tight option. Please ask for details about a special pressure piece.

SDV-P pressure maintenance valve

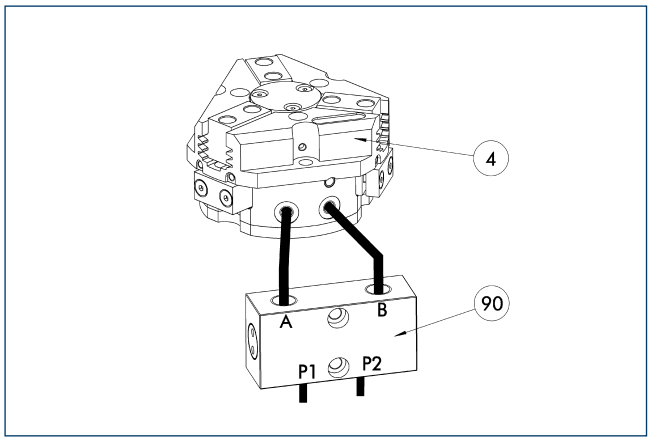

(4) Gripper
(90) SDV-P pressure maintenance valve

The SDV-P pressure maintenance valves ensure that the pressure in the piston chamber of pneumatic gripping, rotary, linear, and quick-change modules is maintained temporarily during an emergency stop.

Description	ID	
Pressure maintenance valve		
SDV-P 10	0300108	

HUE PZN-plus 80 protective cover

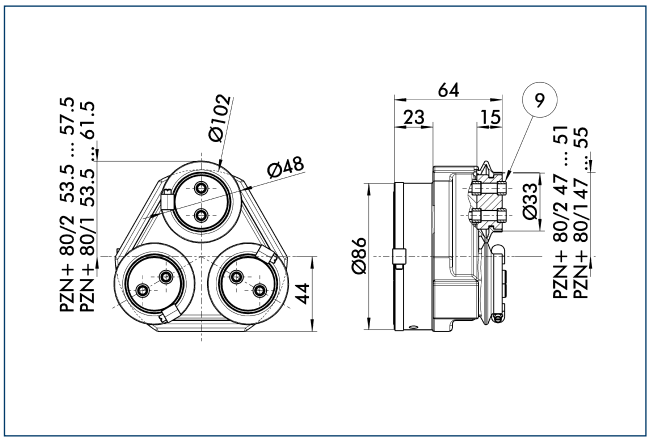

(9) For mounting screw connection diagram, see basic version

The HUE protective cover completely protects the gripper against external influences up to IP65 if an additional sealing of the cover bottom is provided as part of the application. The mounting diagram shifts by the height of the intermediate jaw.

Description	ID	Cleanroom class ISO 14644-1	IP class
Protection cover			
HUE PZN-plus 80	0303481	2	65

BSWS jaw quick-change systems

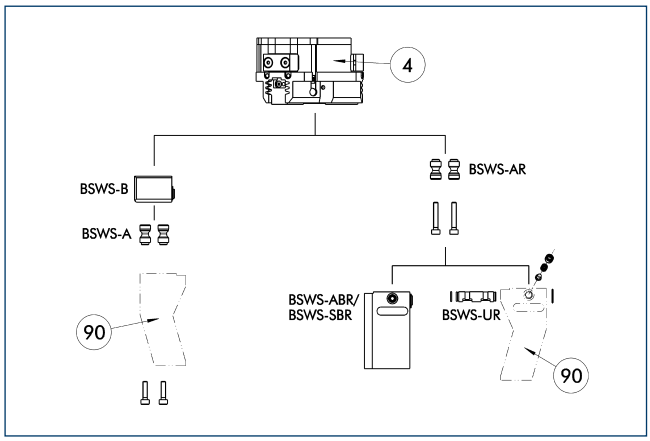

(4) Gripper

(90) Customized gripper fingers

There are various jaw quick-change systems available for the grippers. For detailed information, refer to the appropriate product.

Description	ID	
Jaw quick-change system adapter		
BSWS-AR 80	0300093	
BSWS-A 80	0303024	
Jaw quick-change system base		
BSWS-B 80	0303025	
Finger blanks with jaw quick-change system		
BSWS-ABR-PGZN-plus 80	0300073	
BSWS-SBR-PGZN-plus 80	0300083	
Jaw quick-change system reversed		
BSWS-UR 80	0302992	

ⓘ Only the systems listed in the table can be used.

ZBA L-plus 80 intermediate jaws

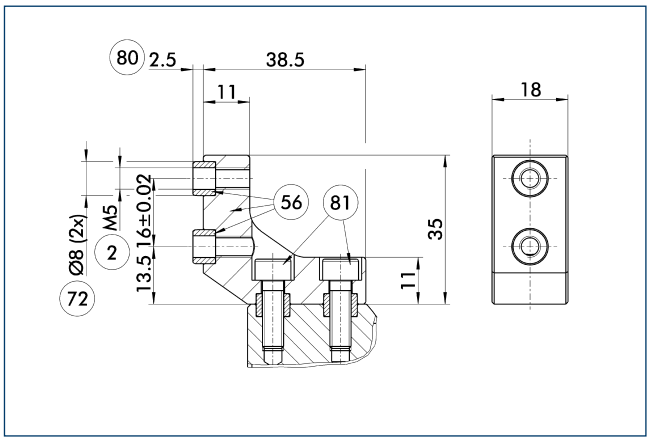

(2) Finger connection

(56) Included in delivery

(72) Fit for centering sleeves

(80) Depth of the centering sleeve hole in the mating part

(81) Not included in the scope of delivery

Optionally intermediate jaws can be used, enabling direct connection and alignment of top jaws and various standard accessories in Z-direction.

Description	ID	Material	Scope of delivery
Intermediate jaws			
ZBA-L-plus 80	0311732	Aluminum	1

UZB 80 universal intermediate jaw

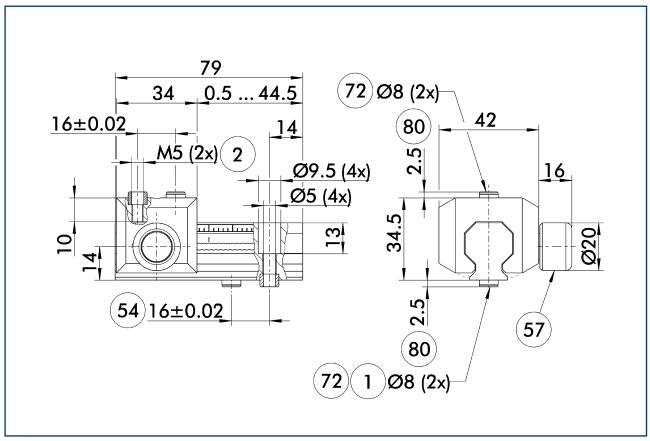

1 Gripper connection
2 Finger connection
54 Optional right or left connection
57 Locking
72 Fit for centering sleeves
80 Depth of the centering sleeve hole in the mating part

The universal intermediate jaw allows fast tool-free and reliable plugging and shifting of top jaws at the gripper.

Description	ID	Grid dimension [mm]
Universal intermediate jaw		
UZB 80	0300043	2
UZB-S 80	5518271	2
Finger blanks		
ABR-PGZN-plus 80	0300011	
SBR-PGZN-plus 80	0300021	

FMS-ZBA / ZBP 80 force-measuring jaws

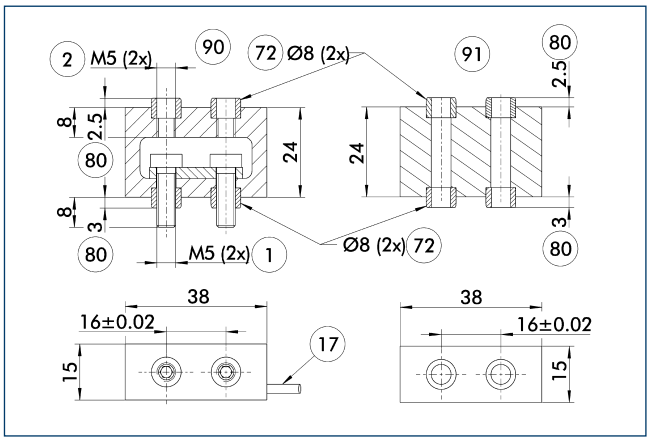

1 Gripper connection
2 Finger connection
17 Cable outlet
72 Fit for centering sleeves
80 Depth of the centering sleeve hole in the mating part
90 Active intermediate jaws
91 Passive intermediate jaws

Force measuring jaws measure gripping forces, but can also determine workpiece weights or dimensional deviations. There are active and passive intermediate jaws (FMS-ZBA or FMS-ZBP). At least one active force measuring jaw is required per gripper, the rest can be passive. For each active jaw, a FMS-A control unit and a FMS-AK connection cable are required.

Description	ID	Often combined
Active intermediate jaws		
FMS-ZBA 80	0301834	
Passive intermediate jaws		
FMS-ZBP 80	0301835	
Connection cables		
FMS-AK0200	0301820	●
FMS-AK0500	0301821	
FMS-AK1000	0301822	
FMS-AK2000	0301823	
Electronic processor		
FMS-A1	0301810	

ABR- / SBR-PGZN-plus 80 finger blanks

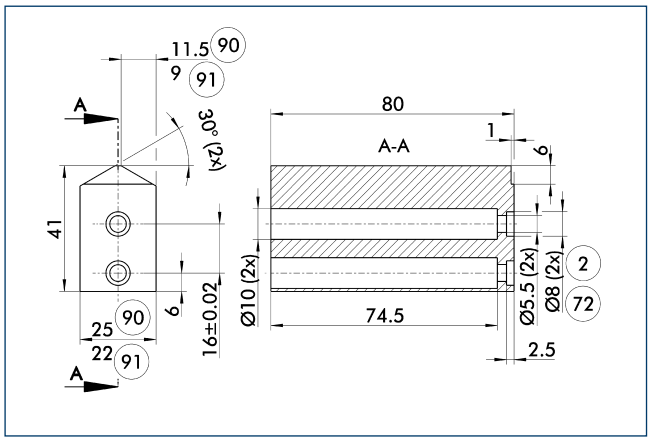

(2) Finger connection
(72) Fit for centering sleeves
(90) ABR-PGZN-plus
(91) SBR-PGZN-plus

Finger blanks for customized subsequent machining.

Description	ID	Material	Scope of delivery
Finger blanks			
ABR-PGZN-plus 80	0300011	Aluminum	1
SBR-PGZN-plus 80	0300021	16MnCr5	1

Modular assembly automation

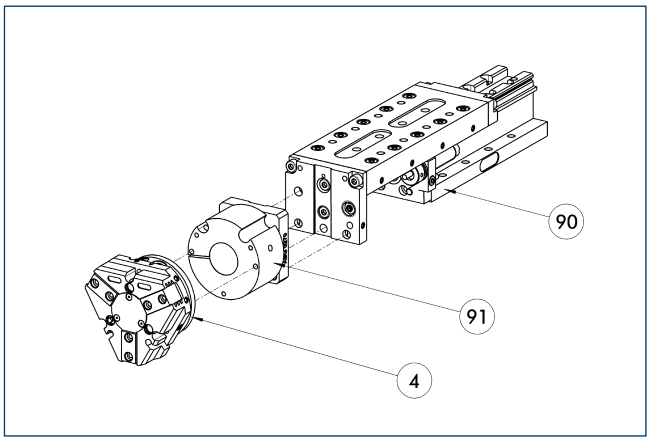

(4) Gripper
(91) ASG adapter plate
(90) CLM / KLM / LM / ELM / ELS / HLM linear module

Gripper and linear modules can be combined with standard adapters out of the modular assembly system. For more information see our catalog “Modular Assembly Automation”.

Inductive proximity switches

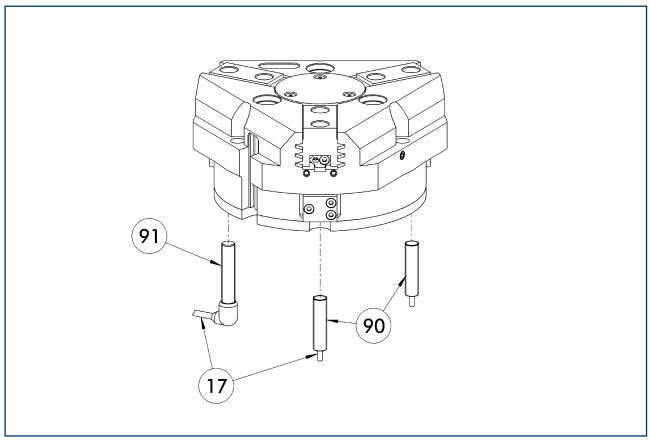

(17) Cable outlet
(90) IN ... sensor
(91) IN ...-SA sensor

Directly mounted limit position monitor.

Description	ID	Often combined
Inductive proximity switches		
IN 80-S-M12	0301578	
IN 80-S-M8	0301478	●
IN-C 80-S-M8	0301475	
INK 80-S	0301550	
Inductive proximity switches with lateral outlet		
IN 80-S-M12-SA	0301587	
IN 80-S-M8-SA	0301483	●
INK 80-S-SA	0301566	
Cable extensions		
KV BG12-SG12 3P-0030-PNP	0301999	
KV BG12-SG12 3P-0060-PNP	0301998	
KV BW08-SG08 3P-0030-PNP	0301495	
KV BW08-SG08 3P-0100-PNP	0301496	
KV BW08-SG08 3P-0200-PNP	0301497	●
KV BW12-SG12 3P-0030-PNP	0301595	
KV BW12-SG12 3P-0100-PNP	0301596	
KV BW12-SG12 3P-0200-PNP	0301597	
Clip for plug / socket		
CLI-M12	0301464	
CLI-M8	0301463	
Connection cables		
KA BG08-L 3P-0300-PNP	0301622	●
KA BG08-L 3P-0500-PNP	0301623	
KA BG12-L 3P-0500-PNP	30016369	
KA BW08-L 3P-0300-PNP	0301594	
KA BW08-L 3P-0500-PNP	0301502	
KA BW12-L 3P-0300-PNP	0301503	
KA BW12-L 3P-0500-PNP	0301507	
Sensor distributor		
V2-M8	0301775	●
V2-M12	0301776	●
V4-M12	0301747	

ⓘ Two sensors (closer/S) are required for each unit, plus extension cables as an option. Please note the minimum permitted bending radii for the sensor cables, which are generally 35 mm.

Flexible position sensor

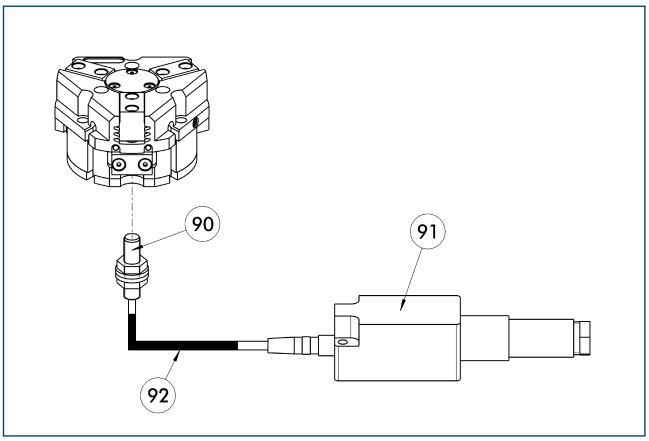

(90) FPS-S sensor
(91) FPS-F5 / -F5 T electronic processor
(92) Cable extensions

Flexible position monitoring of up to five positions.

Description	ID	Often combined
Mounting kit for FPS		
AS-FPS-PGZN-plus 64-1/80-2	0301630	
AS-FPS-PGZN-plus 80-1/PZB 80/PZB 100	0301632	
Electronic processor		
FPS-F5	0301805	●
FPS-F5 T	0301807	
Sensor		
FPS-S M8	0301704	
Clip for plug / socket		
CLI-M8	0301463	

ⓘ When using a FPS system, a FPS sensor (FPS-S) and a control unit (FPS-F5 / F5 T) are required for each gripper as well as a mounting kit (AS), if listed. Cable extensions (KV) are available as options in the "Accessories" catalog section.

MMS electronic magnetic switches

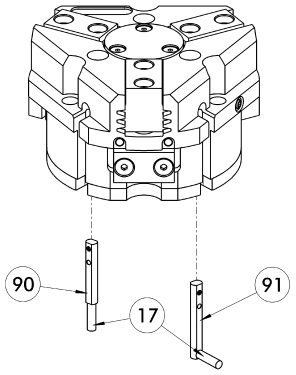

(17) Cable outlet
(91) MMS 22...-SA sensor
(90) MMS 22... sensor

End position monitoring for mounting in the C-slot.

Description	ID	Often combined
MMS electronic magnetic switches		
MMS 22-S-M8-PNP	0301032	●
MMSK 22-S-PNP	0301034	
MMS electronic magnetic switches with lateral cable outlet		
MMS 22-S-M8-PNP-SA	0301042	●
MMSK 22-S-PNP-SA	0301044	
Cable extensions		
KV BW08-SG08 3P-0030-PNP	0301495	
KV BW08-SG08 3P-0100-PNP	0301496	
KV BW08-SG08 3P-0200-PNP	0301497	●
Clip for plug / socket		
CLI-M8	0301463	
Connection cables		
KA BG08-L 3P-0300-PNP	0301622	●
KA BG08-L 3P-0500-PNP	0301623	
KA BW08-L 3P-0300-PNP	0301594	
KA BW08-L 3P-0500-PNP	0301502	
Sensor distributor		
V2-M8	0301775	●
V4-M8	0301746	
V8-M8	0301751	

ⓘ Two sensors (closer/S) are required for each unit, plus extension cables as an option. Please note the minimum permitted bending radii for the sensor cables, which are generally 35 mm.

MMS PI1 programmable magnetic switches

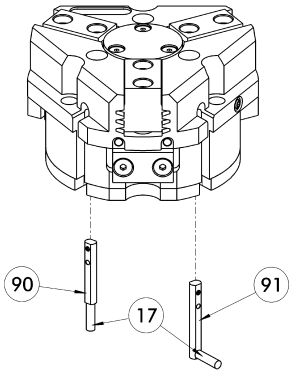

(17) Cable outlet
(91) MMS 22...-PI1-...-SA sensor
(90) MMS 22...-PI1-... sensor

Position query with one programmable position per sensor and electronics integrated in sensor. Programmable via MT magnet teaching tool (included in the scope of delivery) or ST plug teaching tool (optional). Limit position query mounted in C-groove. If the ST plug teaching tools are listed in the table, teaching can only take place with the ST plug teaching tools.

Description	ID	Often combined
MMS PI1 programmable magnetic switches		
MMS 22-PI1-S-M8-PNP	0301160	●
MMSK 22-PI1-S-PNP	0301162	
MMS PI1-HD programmable magnetic switches with stainless steel housing		
MMS 22-PI1-S-M8-PNP-HD	0301110	●
MMSK 22-PI1-S-PNP-HD	0301112	
MMS PI1 programmable magnetic switches with lateral cable outlet		
MMS 22-PI1-S-M8-PNP-SA	0301166	●
MMSK 22-PI1-S-PNP-SA	0301168	

ⓘ Two sensors (closer/S) are required for each unit, plus extension cables as an option. Please note the minimum permitted bending radii for the sensor cables, which are generally 35 mm. Connection cable, cable extensions, and sensor distributors can be found in the table for the MMS 22.

MMS PI2 programmable magnetic switches

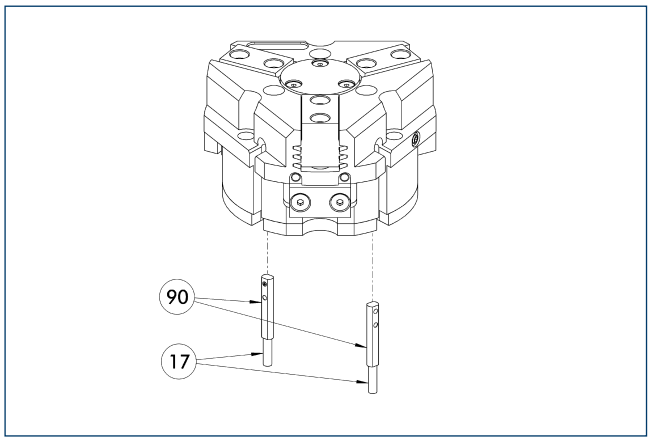

(17) Cable outlet (90) MMS 22...-PI2-... sensor

Position query with two programmable positions per sensor and electronics integrated in sensor. Programmable via MT magnet teaching tool (included in the scope of delivery) or ST plug teaching tool (optional). Limit position query mounted in C-groove. If the ST plug teaching tools are listed in the table, teaching can only take place with the ST plug teaching tools.

Description	ID	Often combined
MMS PI2 programmable magnetic switches		
MMS 22-PI2-S-M8-PNP	0301180	●
MMSK 22-PI2-S-PNP	0301182	
MMS PI2-HD programmable magnetic switches with stainless steel housing		
MMS 22-PI2-S-M8-PNP-HD	0301130	●
MMSK 22-PI2-S-PNP-HD	0301132	

ⓘ Per unit one sensor (closer/S) is required, optionally a cable extension. Please note the minimum permitted bending radii for the sensor cables, which are generally 35 mm. Connection cable, cable extensions, and sensor distributors can be found in the table for the MMS-P 22.

MMS-P programmable magnetic switches

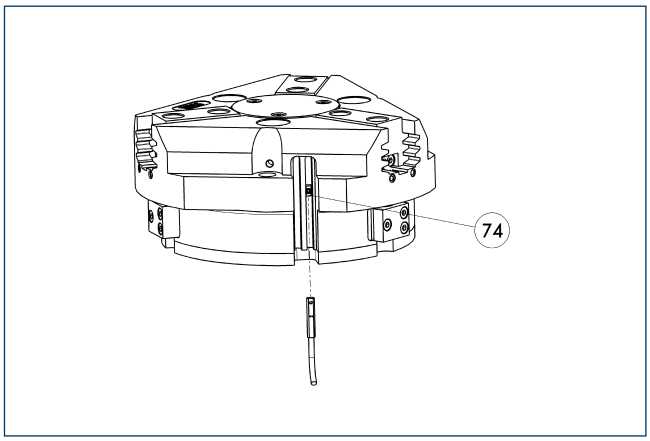

(74) Stop for MMS-P

Position monitoring with two programmable positions per sensor. The end position monitoring is mounted in the C-slot.

Description	ID	Often combined
MMS-P programmable magnetic switches		
MMSK-P 22-S-PNP	0301371	
MMS-P 22-S-M8-PNP	0301370	●
Clip for plug / socket		
CLI-M8	0301463	
Connection cables		
KA BG08-L 4P-0500	0307767	●
KA BG08-L 4P-1000	0307768	
KA BW08-L 4P-0500	0307765	
KA BW08-L 4P-1000	0307766	
Sensor distributor		
V2-M8-4P-2XM8-3P	0301380	

ⓘ Per unit one sensor (closer/S) is required, optionally a cable extension. Please note the minimum permitted bending radii for the sensor cables, which are generally 35 mm.

APS-Z80 analog position sensor

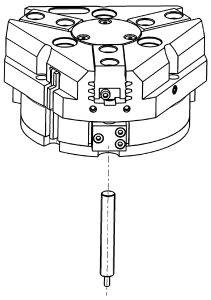

Contactlessly measuring, analog multi-position monitoring for any number of positions.

Description	ID	Often combined
Mounting kit for APS-Z80		
AS-APS-Z80-PGZN-plus 80-1	0302107	
AS-APS-Z80-PGZN-plus 80-2	0302108	
Sensor		
APS-Z80-K	0302072	
APS-Z80-M8	0302070	●

ⓘ When using an APS system, one mounting kit (AS-APS-Z80) and one APS-Z80 sensor is required per gripper.

APS-M1 analog position sensor

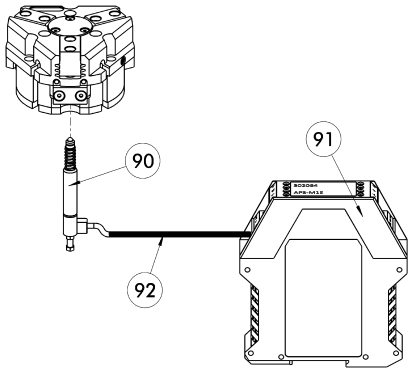

(90) APS-M1S sensor
(91) APS-M1E electronic processor
(92) APS-K extension cable

Analog multi position monitoring for any desired positions.

Description	ID	Often combined
Mounting kit for APS-M1		
AS-APS-M1-PGZN-plus 80-1	0302077	
AS-APS-M1-PGZN-plus 80-2	0302078	
Connection cables		
APS-K0200	0302066	●
APS-K0700	0302068	
Electronic processor		
APS-M1E	0302064	
Sensor		
APS-M1S	0302062	

ⓘ When using an APS system, for each gripper a mounting kit (AS-APS-M1), an APS-M1S sensor (incl. 3 m cable) as well as an electronics (APS-M1e) are required. An extension cable (APS-K) can be connected between the sensor and the electronics as an option. The max. cable length between the sensor and the electronics is 10 m, between the electronics and their control unit (PLC) it is max. 1 m.

Cylindrical reed switches

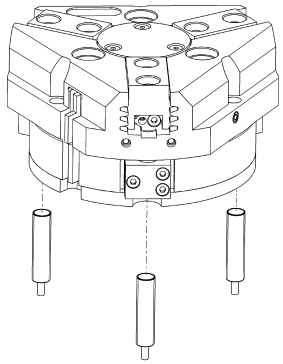

Limit position monitor can be mounted with mounting kit.

Description	ID	
Mounting kit for proximity switch		
AS-RMS 80 PGN/PZN-plus 64/80	0377725	
Reed switches		
RMS 80-S-M8	0377721	

ⓘ Two sensors (closer/S) are required for each unit, plus extension cables as an option. This mounting kit needs to be ordered optionally as an accessory. Two mounting kits are required per gripper. Please note the minimum permitted bending radii for the sensor cables, which are generally 35 mm.

PZN-plus 100

SCHUNK Grippers pneumatic | 3-Finger Centric Grippers | Universal Gripper

Gripping force, O.D. gripping

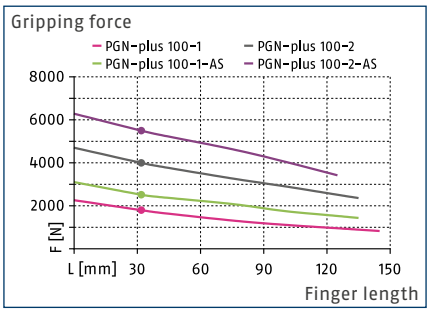

Gripping force, I.D. gripping

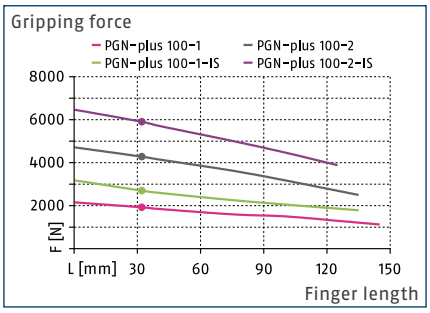

Finger load

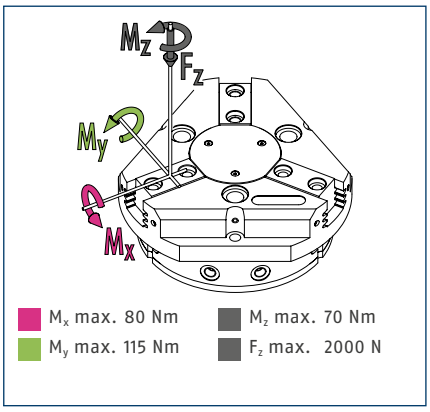

ⓘ The indicated moments and forces are static values, apply per base jaw and may occur simultaneously. M_y may arise in addition to the moment generated by the gripping force itself. If the max. permitted finger weight is exceeded, it is impreative to throttle the air supply so that the jaw movement occurs without any hitting or bouncing. Service life may be reduced.

Technical data

Description		PZN-plus 100-1	PZN-plus 100-2	PZN-plus 100-1-AS	PZN-plus 100-2-AS	PZN-plus 100-1-IS	PZN-plus 100-2-IS
ID		0303312	0303412	0303512	0303612	0303542	0303642
Stroke per jaw	[mm]	10	5	10	5	10	5
Closing- / opening force	[N]	1800/1920	4000/4280	2520/-	5500/-	-/2700	-/5900
min. spring force	[N]			720	1500	780	1620
Weight	[kg]	1.41	1.41	1.95	1.95	1.95	1.95
Recommended workpiece weight	[kg]	9	20	9	20	9	20
Fluid consumption per double stroke	[cm³]	120	120	210	210	210	210
min. / max. operating pressure	[bar]	2/8	2/8	4/6.5	4/6.5	4/6.5	4/6.5
Nominal operating pressure	[bar]	6	6	6	6	6	6
Closing- / opening time	[s]	0.1/0.1	0.1/0.1	0.1/0.2	0.1/0.2	0.2/0.1	0.2/0.1
Closing- / opening time only with spring	[s]			0.25	0.25	0.25	0.25
max. permitted finger length	[mm]	145	135	135	125	135	125
max. permitted weight per finger	[kg]	1.1	1.1	1.1	1.1	1.1	1.1
IP class		40	40	40	40	40	40
min. / max. ambient temperature	[°C]	5/90	5/90	5/90	5/90	5/90	5/90
Repeat accuracy	[mm]	0.01	0.01	0.01	0.01	0.01	0.01
Cleanroom class ISO 14644-1		5	5	5	5	5	5
Options and their characteristics							
Dust-tight version		37303312	37303412	37303512	37303612	37303542	37303642
IP class		64	64	64	64	64	64
Weight	[kg]	1.9	1.9	2.44	2.44	2.44	2.44
Anti-corrosion version		38303312	38303412	38303512	38303612	38303542	38303642
High-temperature version		39303312	39303412	39303512	39303612	39303542	39303642
min. / max. ambient temperature	[°C]	5/130	5/130	5/130	5/130	5/130	5/130
Force intensified version		0372203	0372213	0372223		0372243	
Closing- / opening force	[N]	3240/3455	7200/7705	3960/-		-/4235	
Weight	[kg]	2.3	2.3	2.7		2.7	
Maximum pressure	[bar]	6	6	6		6	
max. permitted finger length	[mm]	100	80	80		80	
Precision version		0303342	0303442	0303492	0303592		

ⓘ The full gripping force according to the data table is only realised after around 100 gripping cycles.

Main view

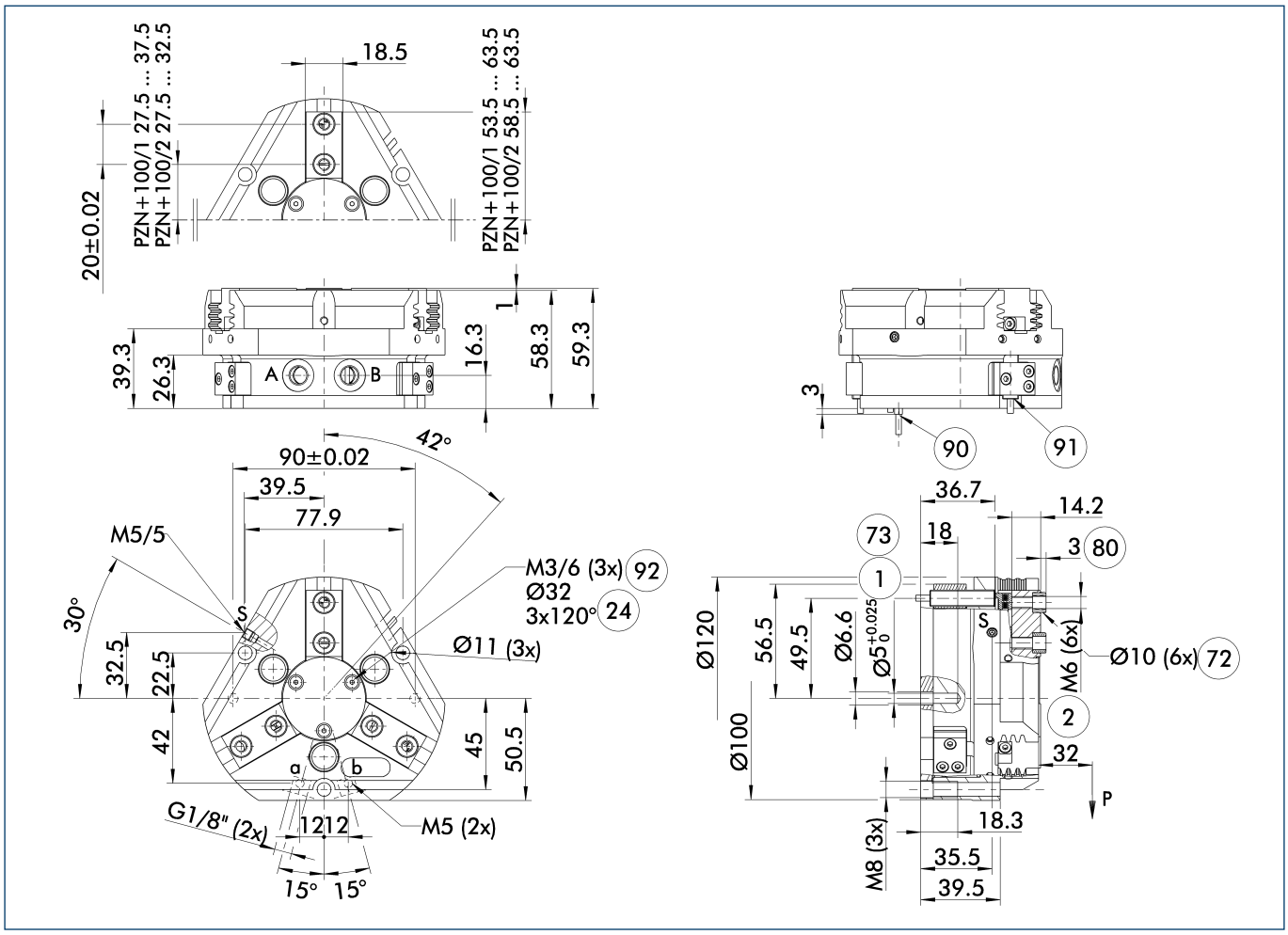

The drawing shows the gripper in the basic version with closed jaws, without dimensional consideration of the options described below.

ⓘ The SDV-P pressure maintenance valve can also be used for I.D. or O.D. gripping alternatively or in addition to the spring-loaded, mechanical gripping force maintenance device (see catalog section on "Accessories").

A, a Main / direct connection, gripper opening

B, b Main / direct connection, gripper closing

S Air purge connection (0.5 ... 1 bar)

(1) Gripper connection

(2) Finger connection

(24) Bolt circle

(72) Fit for centering sleeves

(73) Fit for centering pins

(80) Depth of the centering sleeve hole in the mating part

(90) MMS 22... sensor

(91) IN ... sensor

(92) Thread below the cover for fastening external attachments

Hose-free direct connection M5

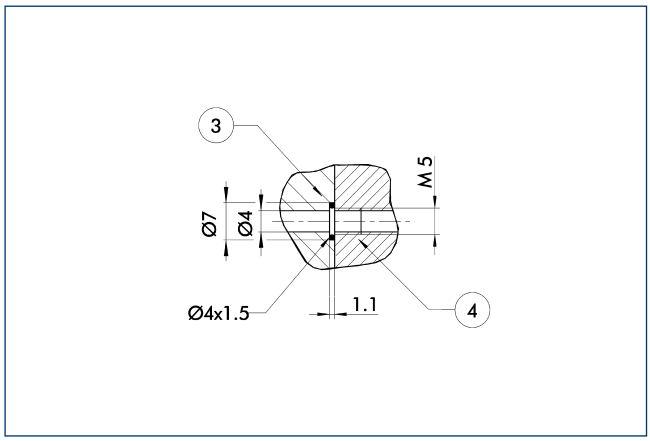

(3) Adapter (4) Gripper

The direct connection is used for supplying compressed air without hoses. Instead, the pressure medium is fed through bore-holes in the mounting plate.

Gripping force maintenance device AS / IS

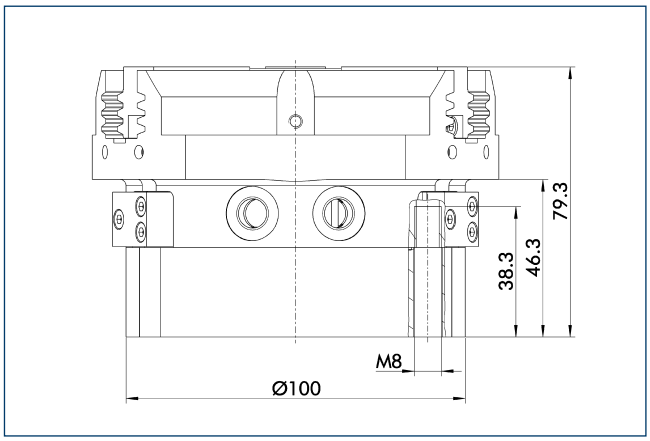

The mechanical maintenance of gripping force also assures a minimum gripping force in the case of a loss of pressure. With the AS / S variant, this acts as a closing force, and as an opening force for the IS variant. The maintenance of gripping force element can also be used as a means for increasing gripping force or for single actuated gripping.

Dust-tight version

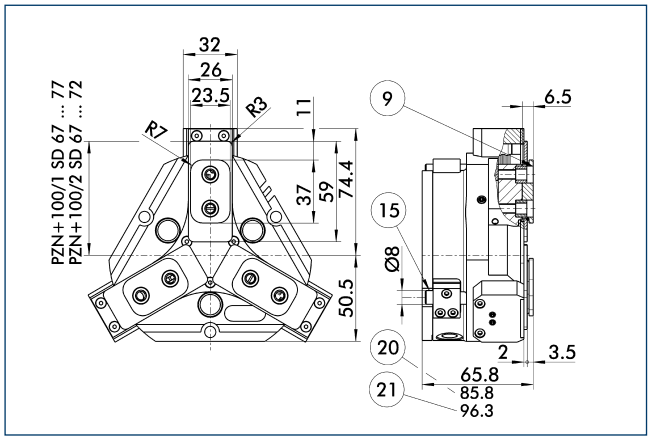

(9) For mounting screw connection diagram, see basic version
(15) Sealing bolt
(20) For AS / IS version
(21) For KVZ version

The "dust-protection" option increases the degree of protection against penetrating substances. The screw connection diagram shifts by the height of the intermediate jaw. The finger length is still measured from the upper edge of the gripper housing.

Force intensified version

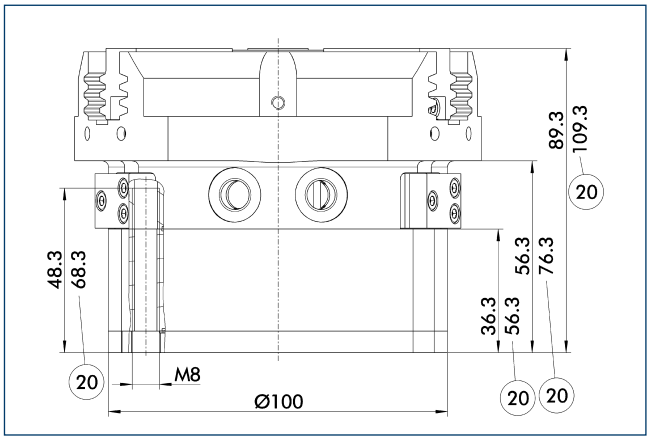

(20) For AS / IS version

The KVZ power booster cylinder increases gripping forces for opening and closing. A second piston connected in a series increases the force on the diagonal pull for this purpose. If applicable, observe the additional installation height for combination with an element for maintenance of gripping force. The force-intensifying version of the gripper can only be attached with screws from below via the provided mounting holes.

Precision version

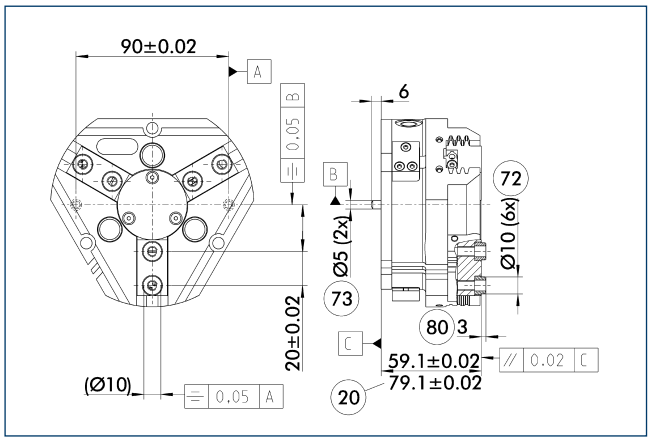

20 For AS / IS version
72 Fit for centering sleeves
73 Fit for centering pins
80 Depth of the centering sleeve hole in the mating part

The indicated tolerances just refer to the types of precision versions shown in the chart of technical specifications. All other types of precision versions are available on request.

Spring-loaded pressure piece

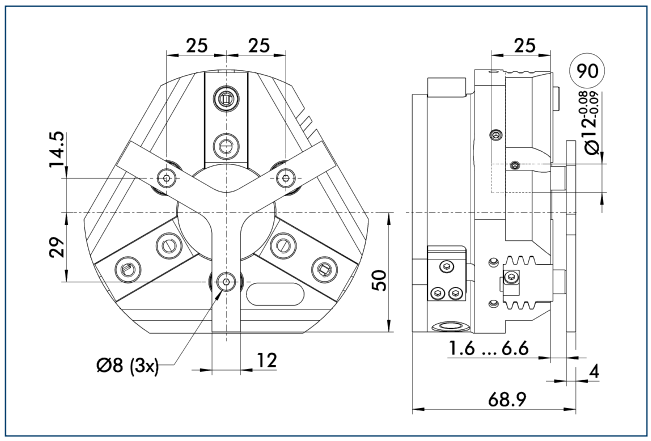

90 Guide pin

For spring-supported positioning of the workpiece against a stop after the gripper has opened. Especially developed for loading machines.

Description	ID	Stroke [mm]	Min. force [N]
Spring-loaded pressure piece			
A-PZN-plus/DPZ-plus 100	0303722	5	35

ⓘ The pressure piece cannot be combined with the dust-tight option. Please ask for details about a special pressure piece.

SDV-P pressure maintenance valve

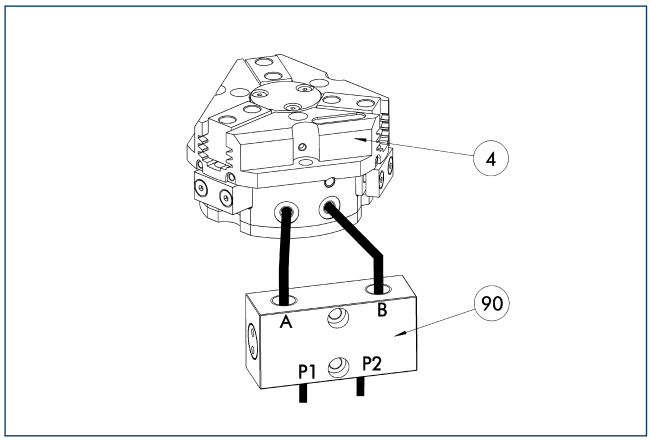

4 Gripper
90 SDV-P pressure maintenance valve

The SDV-P pressure maintenance valves ensure that the pressure in the piston chamber of pneumatic gripping, rotary, linear, and quick-change modules is maintained temporarily during an emergency stop.

Description	ID	
Pressure maintenance valve		
SDV-P 04	0403130	

HUE PZN-plus 100 protective cover

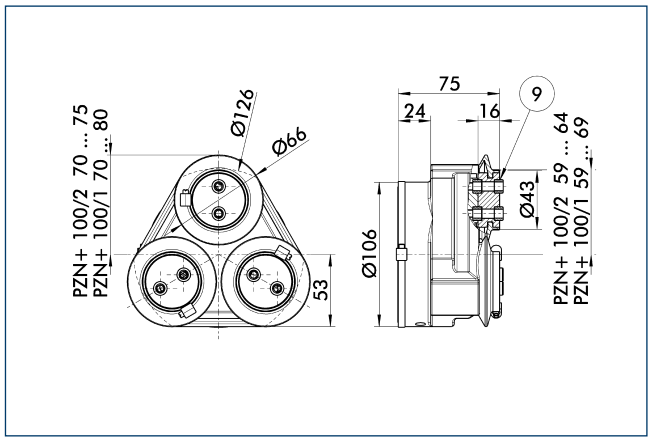

9 For mounting screw connection diagram, see basic version

The HUE protective cover completely protects the gripper against external influences up to IP65 if an additional sealing of the cover bottom is provided as part of the application. The mounting diagram shifts by the height of the intermediate jaw.

Description	ID	Cleanroom class ISO 14644-1	IP class
Protection cover			
HUE PZN-plus 100	0303482	2	65

BSWS jaw quick-change systems

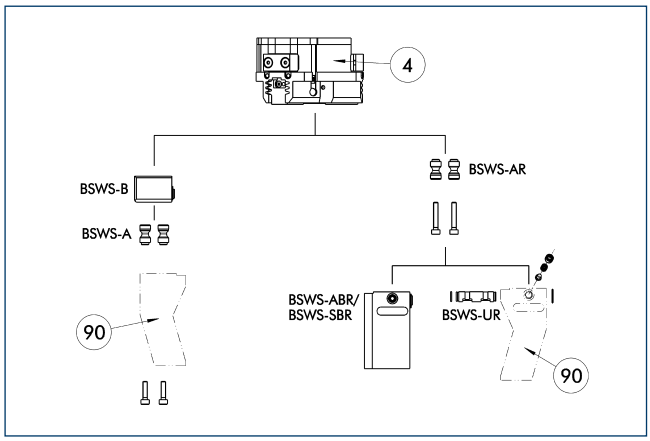

(4) Gripper

(90) Customized gripper fingers

There are various jaw quick-change systems available for the grippers. For detailed information, refer to the appropriate product.

Description	ID	
Jaw quick-change system adapter		
BSWS-AR 100	0300094	
BSWS-A 100	0303026	
Jaw quick-change system base		
BSWS-B 100	0303027	
Finger blanks with jaw quick-change system		
BSWS-ABR-PGZN-plus 100	0300074	
BSWS-SBR-PGZN-plus 100	0300084	
Jaw quick-change system reversed		
BSWS-UR 100	0302993	

ⓘ Only the systems listed in the table can be used.

ZBA L-plus 100 intermediate jaws

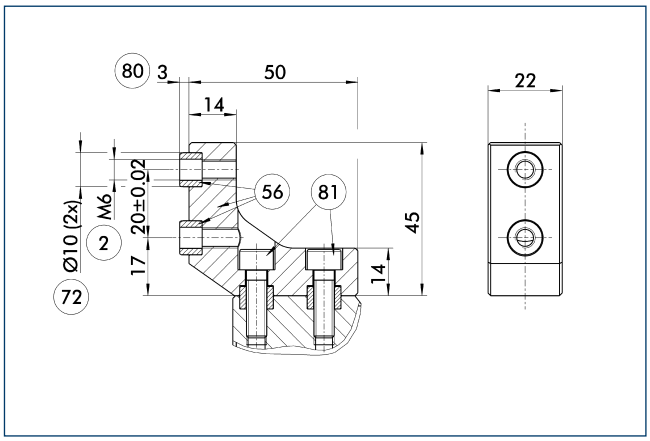

(2) Finger connection

(56) Included in delivery

(72) Fit for centering sleeves

(80) Depth of the centering sleeve hole in the mating part

(81) Not included in the scope of delivery

Optionally intermediate jaws can be used, enabling direct connection and alignment of top jaws and various standard accessories in Z-direction.

Description	ID	Material	Scope of delivery
Intermediate jaws			
ZBA-L-plus 100	0311742	Aluminum	1

UZB 100 universal intermediate jaw

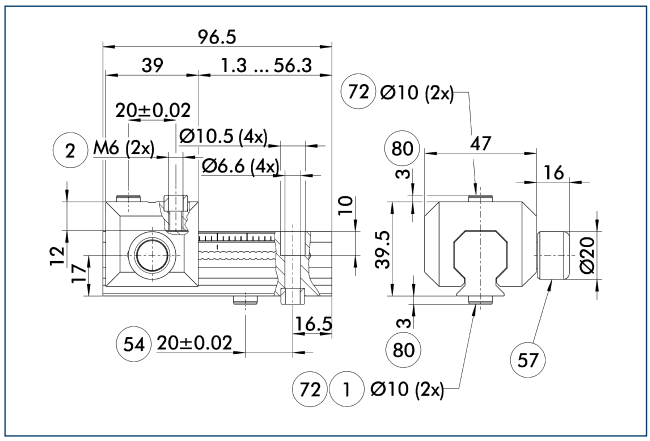

1 Gripper connection
2 Finger connection
54 Optional right or left connection
57 Locking
72 Fit for centering sleeves
80 Depth of the centering sleeve hole in the mating part

The universal intermediate jaw allows fast tool-free and reliable plugging and shifting of top jaws at the gripper.

Description	ID	Grid dimension [mm]
Universal intermediate jaw		
UZB 100	0300044	2.5
UZB-S 100	5518272	2.5
Finger blanks		
ABR-PGZN-plus 100	0300012	
SBR-PGZN-plus 100	0300022	

FMS-ZBA / ZBP 100 force-measuring jaws

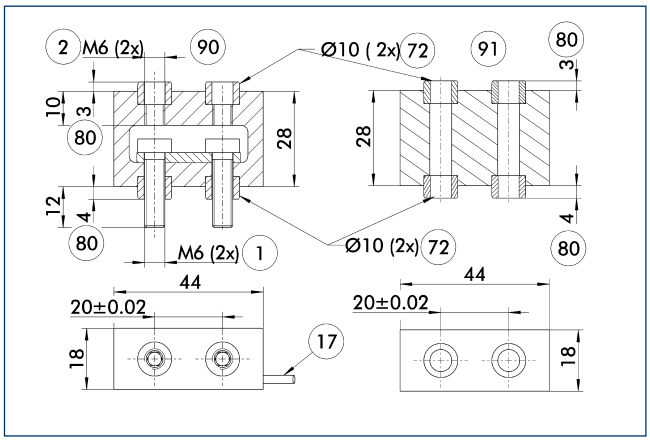

1 Gripper connection
2 Finger connection
17 Cable outlet
72 Fit for centering sleeves
80 Depth of the centering sleeve hole in the mating part
90 Active intermediate jaws
91 Passive intermediate jaws

Force measuring jaws measure gripping forces, but can also determine workpiece weights or dimensional deviations. There are active and passive intermediate jaws (FMS-ZBA or FMS-ZBP). At least one active force measuring jaw is required per gripper, the rest can be passive. For each active jaw, a FMS-A control unit and a FMS-AK connection cable are required.

Description	ID	Often combined
Active intermediate jaws		
FMS-ZBA 100	0301836	
Passive intermediate jaws		
FMS-ZBP 100	0301837	
Connection cables		
FMS-AK0200	0301820	●
FMS-AK0500	0301821	
FMS-AK1000	0301822	
FMS-AK2000	0301823	
Electronic processor		
FMS-A1	0301810	

ABR- / SBR-PGZN-plus 100 finger blanks

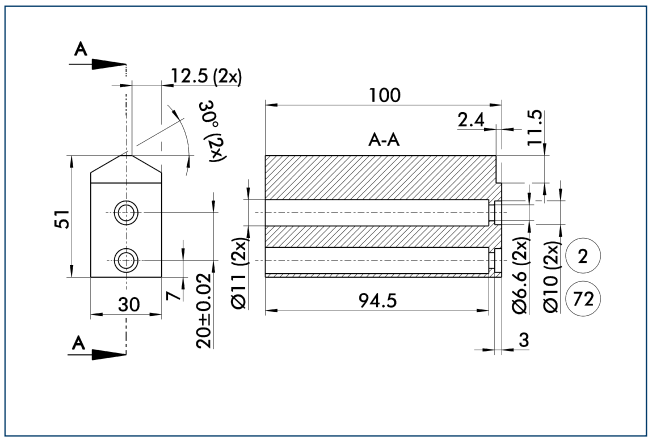

(2) Finger connection (72) Fit for centering sleeves

Finger blanks for customized subsequent machining.

Description	ID	Material	Scope of delivery
Finger blanks			
ABR-PGZN-plus 100	0300012	Aluminum	1
SBR-PGZN-plus 100	0300022	16MnCr5	1

Modular assembly automation

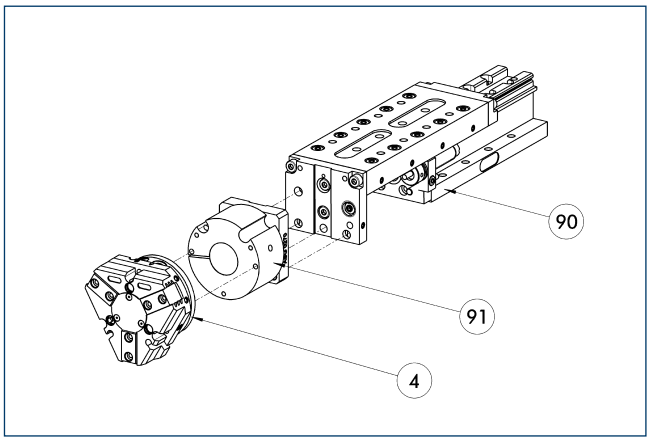

(4) Gripper (91) ASG adapter plate

(90) CLM / KLM / LM / ELM / ELS / HLM linear module

Gripper and linear modules can be combined with standard adapters out of the modular assembly system. For more information see our catalog "Modular Assembly Automation".

Inductive proximity switches

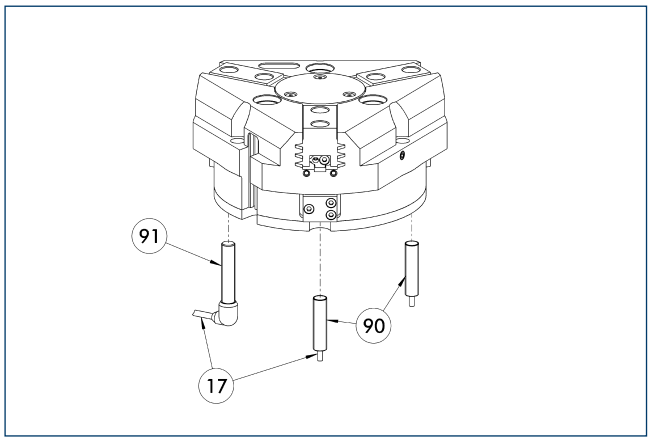

(17) Cable outlet
(90) IN ... sensor
(91) IN ...-SA sensor

Directly mounted limit position monitor.

Description	ID	Often combined
Inductive proximity switches		
IN 80-S-M12	0301578	
IN 80-S-M8	0301478	●
INK 80-S	0301550	
Inductive proximity switches with lateral outlet		
IN 80-S-M12-SA	0301587	
IN 80-S-M8-SA	0301483	●
INK 80-S-SA	0301566	
Cable extensions		
KV BG12-SG12 3P-0030-PNP	0301999	
KV BG12-SG12 3P-0060-PNP	0301998	
KV BW08-SG08 3P-0030-PNP	0301495	
KV BW08-SG08 3P-0100-PNP	0301496	
KV BW08-SG08 3P-0200-PNP	0301497	●
KV BW12-SG12 3P-0030-PNP	0301595	
KV BW12-SG12 3P-0100-PNP	0301596	
KV BW12-SG12 3P-0200-PNP	0301597	
Clip for plug / socket		
CLI-M12	0301464	
CLI-M8	0301463	
Connection cables		
KA BG08-L 3P-0300-PNP	0301622	●
KA BG08-L 3P-0500-PNP	0301623	
KA BG12-L 3P-0500-PNP	30016369	
KA BW08-L 3P-0300-PNP	0301594	
KA BW08-L 3P-0500-PNP	0301502	
KA BW12-L 3P-0300-PNP	0301503	
KA BW12-L 3P-0500-PNP	0301507	
Sensor distributor		
V2-M8	0301775	●
V2-M12	0301776	●
V4-M12	0301747	
V4-M8	0301746	

ⓘ Two sensors (closer/S) are required for each unit, plus extension cables as an option. Please note the minimum permitted bending radii for the sensor cables, which are generally 35 mm.

Flexible position sensor

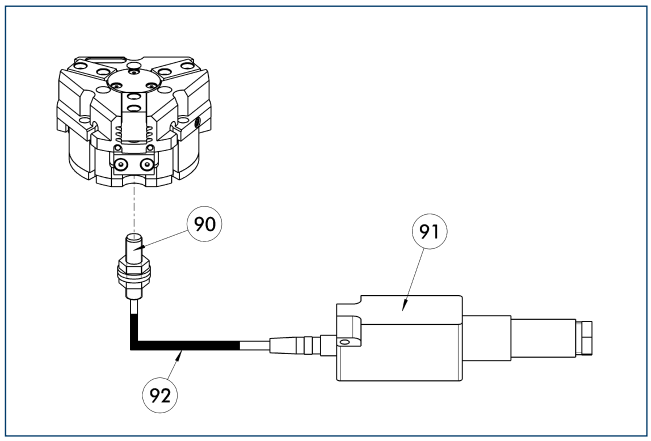

(90) FPS-S sensor
(91) FPS-F5 / -F5 T electronic processor
(92) Cable extensions

Flexible position monitoring of up to five positions.

Description	ID	Often combined
Mounting kit for FPS		
AS-FPS-PGZN-plus 100-1	0301634	
AS-FPS-PGZN-plus 100-2/PZB 125	0301635	
Electronic processor		
FPS-F5	0301805	●
FPS-F5 T	0301807	
Sensor		
FPS-S M8	0301704	
Clip for plug / socket		
CLI-M8	0301463	

ⓘ When using a FPS system, a FPS sensor (FPS-S) and a control unit (FPS-F5 / F5 T) are required for each gripper as well as a mounting kit (AS), if listed. Cable extensions (KV) are available as options in the "Accessories" catalog section.

MMS electronic magnetic switches

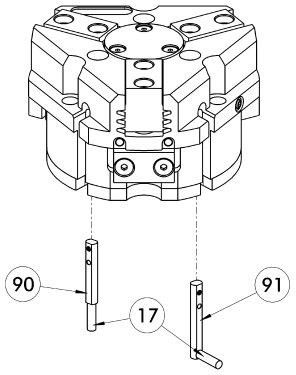

17 Cable outlet
91 MMS 22...-SA sensor
90 MMS 22... sensor

End position monitoring for mounting in the C-slot.

Description	ID	Often combined
MMS electronic magnetic switches		
MMS 22-S-M8-PNP	0301032	●
MMSK 22-S-PNP	0301034	
MMS electronic magnetic switches with lateral cable outlet		
MMS 22-S-M8-PNP-SA	0301042	●
MMSK 22-S-PNP-SA	0301044	
Reed switches		
RMS 22-S-M8	0377720	●
Cable extensions		
KV BW08-SG08 3P-0030-PNP	0301495	
KV BW08-SG08 3P-0100-PNP	0301496	
KV BW08-SG08 3P-0200-PNP	0301497	●
Clip for plug / socket		
CLI-M8	0301463	
Connection cables		
KA BG08-L 3P-0300-PNP	0301622	●
KA BG08-L 3P-0500-PNP	0301623	
KA BW08-L 3P-0300-PNP	0301594	
KA BW08-L 3P-0500-PNP	0301502	
RSS radio sensor system		
RSS-T2	0377710	
Sensor distributor		
V2-M8	0301775	●
V4-M8	0301746	
V8-M8	0301751	

ⓘ Two sensors (closer/S) are required for each unit, plus extension cables as an option. Please note the minimum permitted bending radii for the sensor cables, which are generally 35 mm.

MMS PI1 programmable magnetic switches

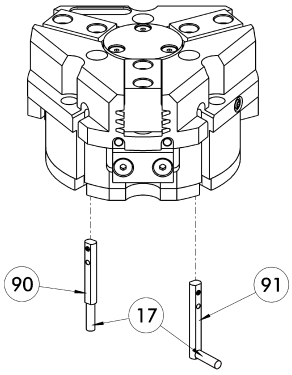

17 Cable outlet
91 MMS 22...-PI1-...-SA sensor
90 MMS 22...-PI1-... sensor

Position query with one programmable position per sensor and electronics integrated in sensor. Programmable via MT magnet teaching tool (included in the scope of delivery) or ST plug teaching tool (optional). Limit position query mounted in C-groove. If the ST plug teaching tools are listed in the table, teaching can only take place with the ST plug teaching tools.

Description	ID	Often combined
Plug teaching tool		
ST-MMS 22-PI1-PNP	0301025	
MMS PI1 programmable magnetic switches		
MMS 22-PI1-S-M8-PNP	0301160	●
MMSK 22-PI1-S-PNP	0301162	
MMS PI1-HD programmable magnetic switches with stainless steel housing		
MMS 22-PI1-S-M8-PNP-HD	0301110	●
MMSK 22-PI1-S-PNP-HD	0301112	
MMS PI1 programmable magnetic switches with lateral cable outlet		
MMS 22-PI1-S-M8-PNP-SA	0301166	●
MMSK 22-PI1-S-PNP-SA	0301168	

ⓘ Two sensors (closer/S) are required for each unit, plus extension cables as an option. Please note the minimum permitted bending radii for the sensor cables, which are generally 35 mm. Connection cable, cable extensions, and sensor distributors can be found in the table for the MMS 22.

MMS PI2 programmable magnetic switches

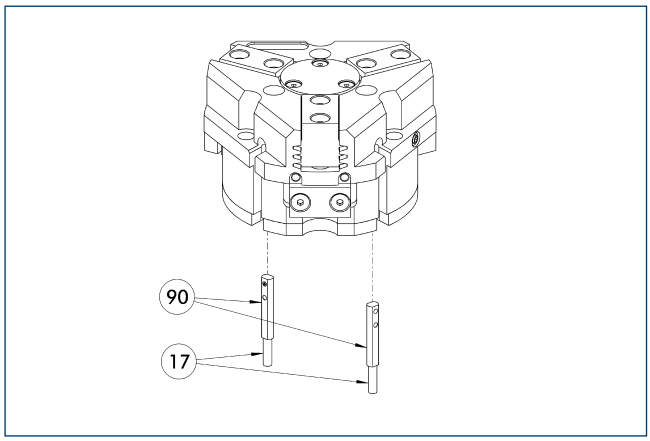

17 Cable outlet
90 MMS 22...-PI2-... sensor

Position query with two programmable positions per sensor and electronics integrated in sensor. Programmable via MT magnet teaching tool (included in the scope of delivery) or ST plug teaching tool (optional). Limit position query mounted in C-groove. If the ST plug teaching tools are listed in the table, teaching can only take place with the ST plug teaching tools.

Description	ID	Often combined
Plug teaching tool		
ST-MMS 22-PI2-PNP	0301026	
MMS PI2 programmable magnetic switches		
MMS 22-PI2-S-M8-PNP	0301180	●
MMSK 22-PI2-S-PNP	0301182	
MMS PI2-HD programmable magnetic switches with stainless steel housing		
MMS 22-PI2-S-M8-PNP-HD	0301130	●
MMSK 22-PI2-S-PNP-HD	0301132	

ⓘ Per unit one sensor (closer/S) is required, optionally a cable extension. Please note the minimum permitted bending radii for the sensor cables, which are generally 35 mm. Connection cable, cable extensions, and sensor distributors can be found in the table for the MMS-P 22.

MMS-P programmable magnetic switches

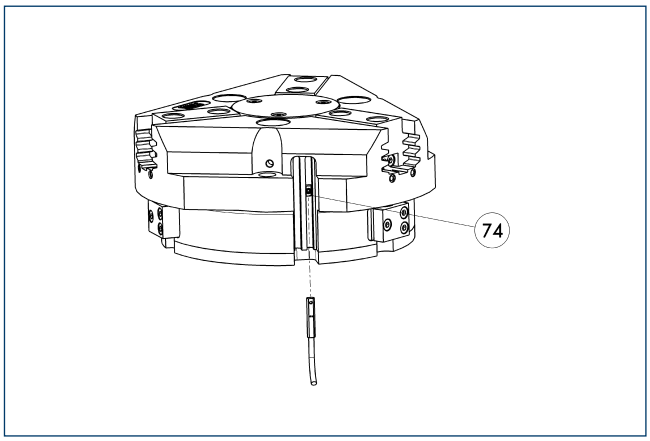

74 Stop for MMS-P

Position monitoring with two programmable positions per sensor. The end position monitoring is mounted in the C-slot.

Description	ID	Often combined
MMS-P programmable magnetic switches		
MMSK-P 22-S-PNP	0301371	
MMS-P 22-S-M8-PNP	0301370	●
Clip for plug / socket		
CLI-M8	0301463	
Connection cables		
KA BG08-L 4P-0500	0307767	●
KA BG08-L 4P-1000	0307768	
KA BW08-L 4P-0500	0307765	
KA BW08-L 4P-1000	0307766	
Sensor distributor		
V2-M8-4P-2XM8-3P	0301380	

ⓘ Per unit one sensor (closer/S) is required, optionally a cable extension. Please note the minimum permitted bending radii for the sensor cables, which are generally 35 mm.

APS-Z80 analog position sensor

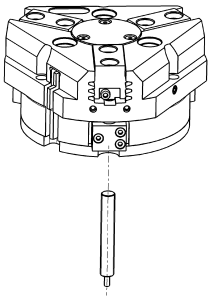

Contactlessly measuring, analog multi-position monitoring for any number of positions.

Description	ID	Often combined
Mounting kit for APS-Z80		
AS-APS-Z80-PGZN-plus 100-1	0302109	
AS-APS-Z80-PGZN-plus 100-2	0302110	
Sensor		
APS-Z80-K	0302072	
APS-Z80-M8	0302070	●

ⓘ When using an APS system, one mounting kit (AS-APS-Z80) and one APS-Z80 sensor is required per gripper.

APS-M1 analog position sensor

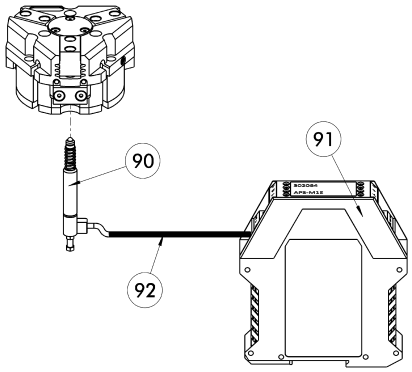

(90) APS-M1S sensor
(91) APS-M1E electronic processor
(92) APS-K extension cable

Analog multi position monitoring for any desired positions.

Description	ID	Often combined
Mounting kit for APS-M1		
AS-APS-M1-PGZN-plus 100-1	0302079	
AS-APS-M1-PGZN-plus 100-2	0302080	
Connection cables		
APS-K0200	0302066	●
APS-K0700	0302068	
Electronic processor		
APS-M1E	0302064	
Sensor		
APS-M1S	0302062	

ⓘ When using an APS system, for each gripper a mounting kit (AS-APS-M1), an APS-M1S sensor (incl. 3 m cable) as well as an electronics (APS-M1e) are required. An extension cable (APS-K) can be connected between the sensor and the electronics as an option. The max. cable length between the sensor and the electronics is 10 m, between the electronics and their control unit (PLC) it is max. 1 m.

Cylindrical reed switches

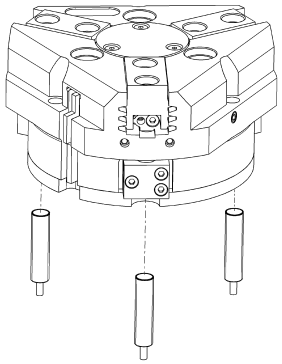

Limit position monitor can be mounted with mounting kit.

Description	ID	
Mounting kit for proximity switch		
AS-RMS 80 PGN/PZN-plus 100/125	0377726	
Reed switches		
RMS 80-S-M8	0377721	

ⓘ Two sensors (closer/S) are required for each unit, plus extension cables as an option. This mounting kit needs to be ordered optionally as an accessory. Two mounting kits are required per gripper. Please note the minimum permitted bending radii for the sensor cables, which are generally 35 mm.

PZN-plus 125

SCHUNK Grippers pneumatic | 3-Finger Centric Grippers | Universal Gripper

Gripping force, O.D. gripping

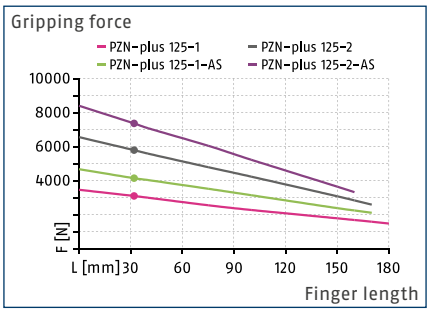

Gripping force, I.D. gripping

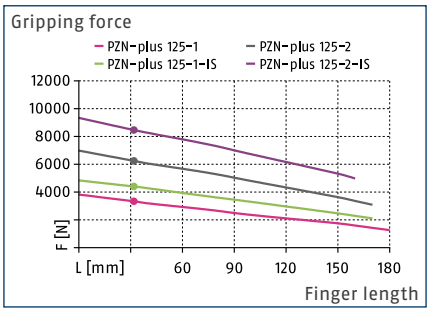

Finger load

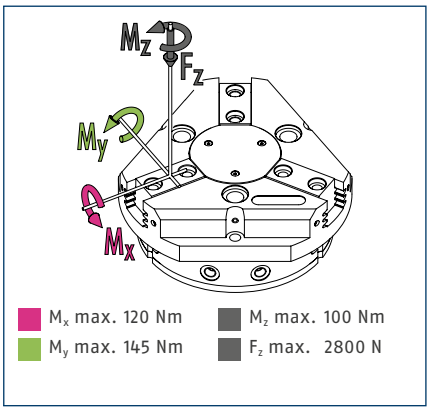

ⓘ The indicated moments and forces are static values, apply per base jaw and may occur simultaneously. M_y may arise in addition to the moment generated by the gripping force itself. If the max. permitted finger weight is exceeded, it is impreative to throttle the air supply so that the jaw movement occurs without any hitting or bouncing. Service life may be reduced.

Technical data

Description		PZN-plus 125-1	PZN-plus 125-2	PZN-plus 125-1-AS	PZN-plus 125-2-AS	PZN-plus 125-1-IS	PZN-plus 125-2-IS
ID		0303313	0303413	0303513	0303613	0303543	0303643
Stroke per jaw	[mm]	13	6	13	6	13	6
Closing- / opening force	[N]	3100/3330	5800/6240	4150/-	7970/-	-/4400	-/8450
min. spring force	[N]			1050	2170	1070	2210
Weight	[kg]	2.47	2.47	3.34	3.34	3.34	3.34
Recommended workpiece weight	[kg]	15.5	29	15.5	29	15.5	29
Fluid consumption per double stroke	[cm³]	230	230	383	383	383	383
min. / max. operating pressure	[bar]	2/8	2/8	4/6.5	4/6.5	4/6.5	4/6.5
Nominal operating pressure	[bar]	6	6	6	6	6	6
Closing- / opening time	[s]	0.2/0.2	0.2/0.2	0.17/0.35	0.17/0.35	0.35/0.17	0.35/0.17
Closing- / opening time only with spring	[s]			0.40	0.40	0.40	0.40
max. permitted finger length	[mm]	180	170	170	160	170	160
max. permitted weight per finger	[kg]	2.1	2.1	2.1	2.1	2.1	2.1
IP class		40	40	40	40	40	40
min. / max. ambient temperature	[°C]	5/90	5/90	5/90	5/90	5/90	5/90
Repeat accuracy	[mm]	0.01	0.01	0.01	0.01	0.01	0.01
Cleanroom class ISO 14644-1		5	5	5	5	5	5
Options and their characteristics							
Dust-tight version		37303313	37303413	37303513	37303613	37303543	37303643
IP class		64	64	64	64	64	64
Weight	[kg]	2.9	2.9	3.7	3.7	3.7	3.7
Anti-corrosion version		38303313	38303413	38303513	38303613	38303543	38303643
High-temperature version		39303313	39303413	39303513	39303613	39303543	39303643
min. / max. ambient temperature	[°C]	5/130	5/130	5/130	5/130	5/130	5/130
Force intensified version		0372204	0372214	0372224		0372244	
Closing- / opening force	[N]	5580/5935	10440/11230	6630/-		-/7005	
Weight	[kg]	3.7	3.7	4.5		4.5	
Maximum pressure	[bar]	6	6	6		6	
max. permitted finger length	[mm]	125	100	100		100	
Precision version		0303343	0303443	0303493	0303593		

ⓘ The full gripping force according to the data table is only realised after around 100 gripping cycles.

Main view

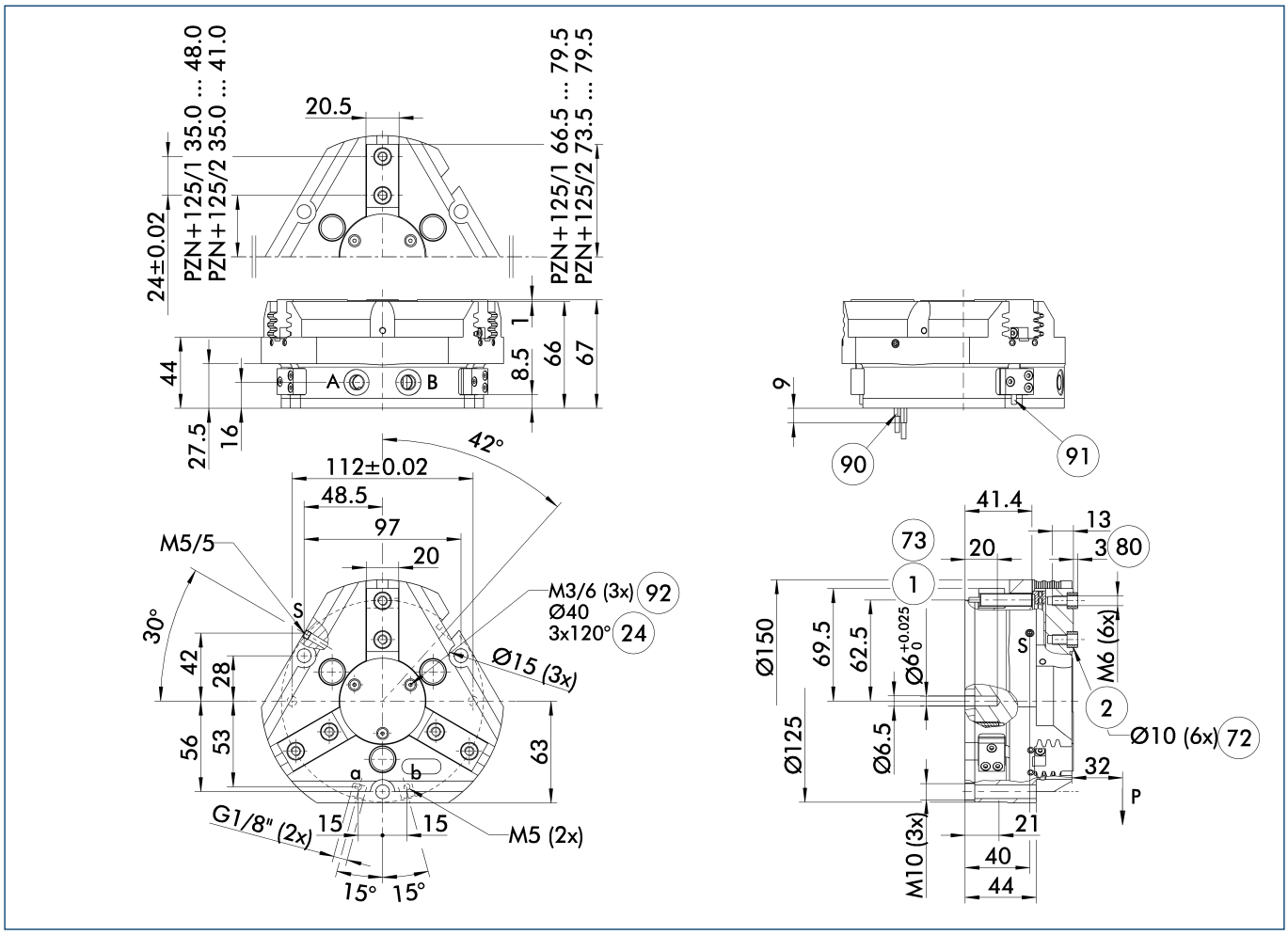

The drawing shows the gripper in the basic version with closed jaws, without dimensional consideration of the options described below.

ⓘ The SDV-P pressure maintenance valve can also be used for I.D. or O.D. gripping alternatively or in addition to the spring-loaded, mechanical gripping force maintenance device (see catalog section on "Accessories").

A, a Main / direct connection, gripper opening

B, b Main / direct connection, gripper closing

S Air purge connection (0.5 ... 1 bar)

(1) Gripper connection

(2) Finger connection

(24) Bolt circle

(72) Fit for centering sleeves

(73) Fit for centering pins

(80) Depth of the centering sleeve hole in the mating part

(90) MMS 22... sensor

(91) IN ... sensor

(92) Thread below the cover for fastening external attachments

Hose-free direct connection M5

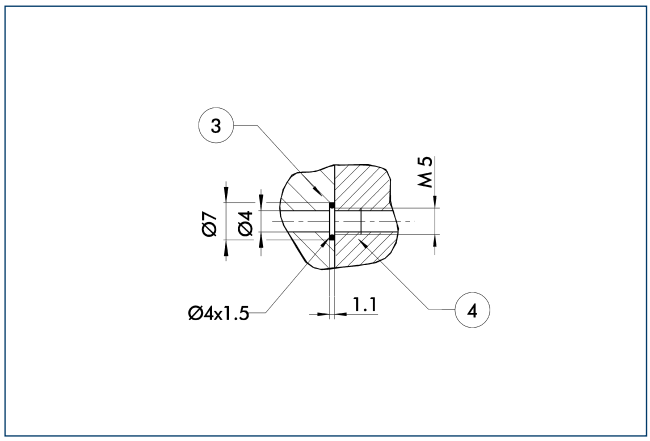

(3) Adapter (4) Gripper

The direct connection is used for supplying compressed air without hoses. Instead, the pressure medium is fed through bore-holes in the mounting plate.

Gripping force maintenance device AS / IS

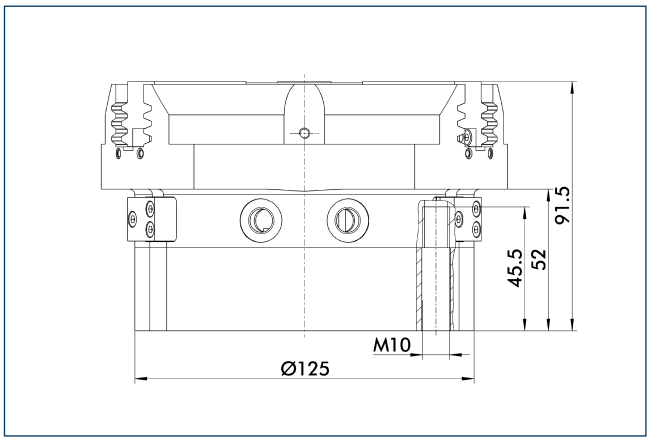

The mechanical maintenance of gripping force also assures a minimum gripping force in the case of a loss of pressure. With the AS / S variant, this acts as a closing force, and as an opening force for the IS variant. The maintenance of gripping force element can also be used as a means for increasing gripping force or for single actuated gripping.

Dust-tight version

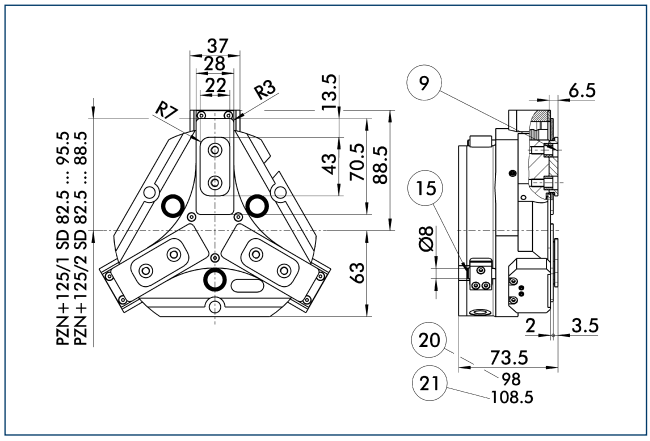

(9) For mounting screw connection diagram, see basic version
(15) Sealing bolt
(20) For AS / IS version
(21) For KVZ version

The "dust-protection" option increases the degree of protection against penetrating substances. The screw connection diagram shifts by the height of the intermediate jaw. The finger length is still measured from the upper edge of the gripper housing.

Force intensified version

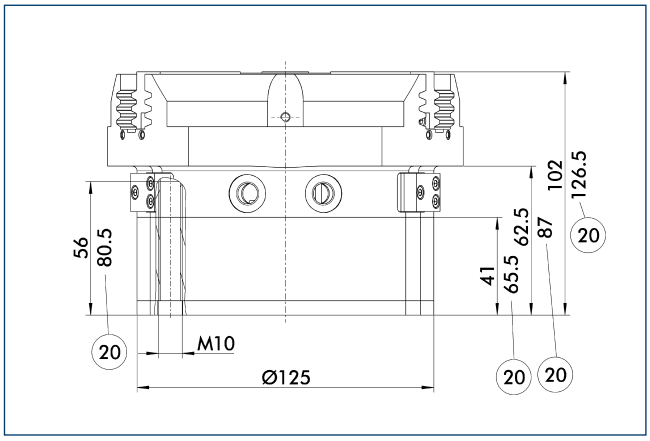

(20) For AS / IS version

The KVZ power booster cylinder increases gripping forces for opening and closing. A second piston connected in a series increases the force on the diagonal pull for this purpose. If applicable, observe the additional installation height for combination with an element for maintenance of gripping force. The force-intensifying version of the gripper can only be attached with screws from below via the provided mounting holes.

Precision version

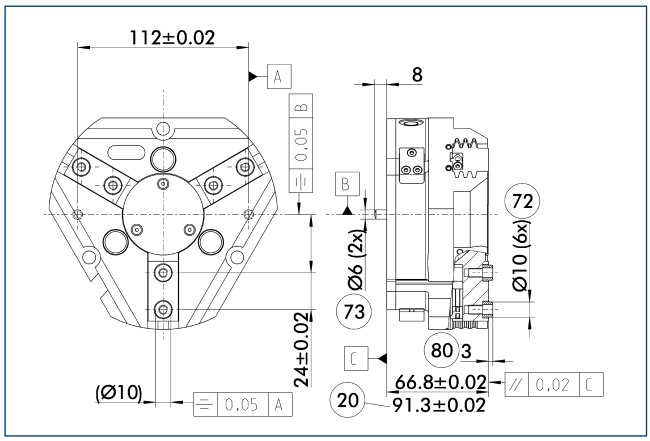

20 For AS / IS version
72 Fit for centering sleeves
73 Fit for centering pins
80 Depth of the centering sleeve hole in the mating part

The indicated tolerances just refer to the types of precision versions shown in the chart of technical specifications. All other types of precision versions are available on request.

Spring-loaded pressure piece

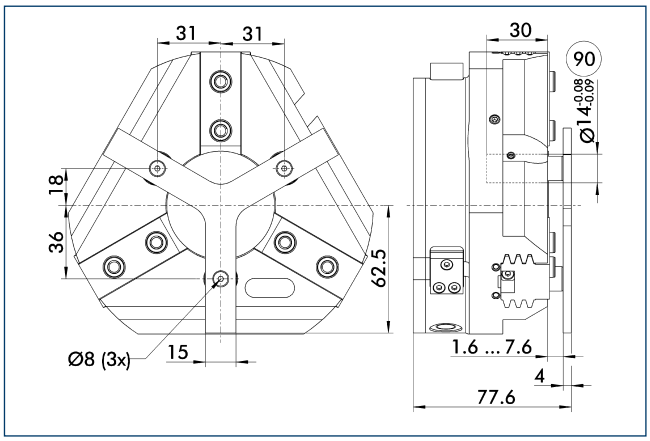

90 Guide pin

For spring-supported positioning of the workpiece against a stop after the gripper has opened. Especially developed for loading machines.

Description	ID	Stroke [mm]	Min. force [N]
Spring-loaded pressure piece			
A-PZN-plus/DPZ-plus 125	0303723	6	105

ⓘ The pressure piece cannot be combined with the dust-tight option. Please ask for details about a special pressure piece.

SDV-P pressure maintenance valve

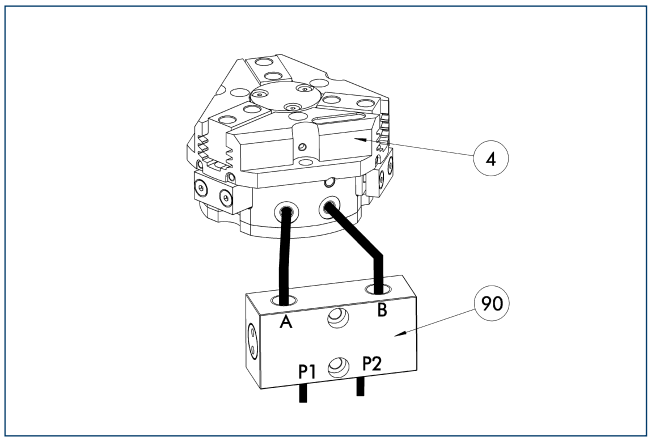

4 Gripper
90 SDV-P pressure maintenance valve

The SDV-P pressure maintenance valves ensure that the pressure in the piston chamber of pneumatic gripping, rotary, linear, and quick-change modules is maintained temporarily during an emergency stop.

Description	ID	
Pressure maintenance valve		
SDV-P 04	0403130	

HUE PZN-plus 125 protective cover

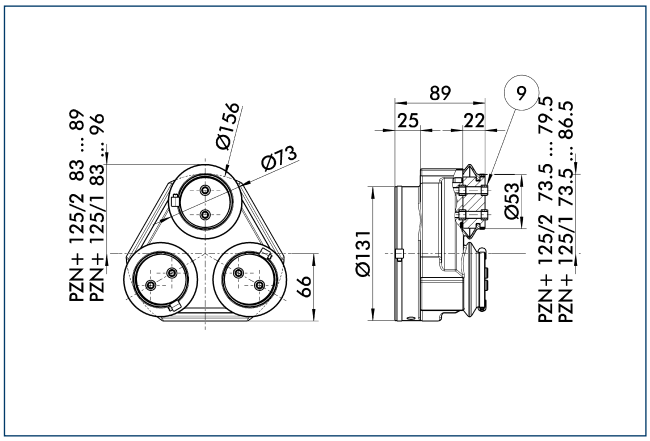

9 For mounting screw connection diagram, see basic version

The HUE protective cover completely protects the gripper against external influences up to IP65 if an additional sealing of the cover bottom is provided as part of the application. The mounting diagram shifts by the height of the intermediate jaw.

Description	ID	Cleanroom class ISO 14644-1	IP class
Protection cover			
HUE PZN-plus 125	0303483	2	65

BSWS jaw quick-change systems

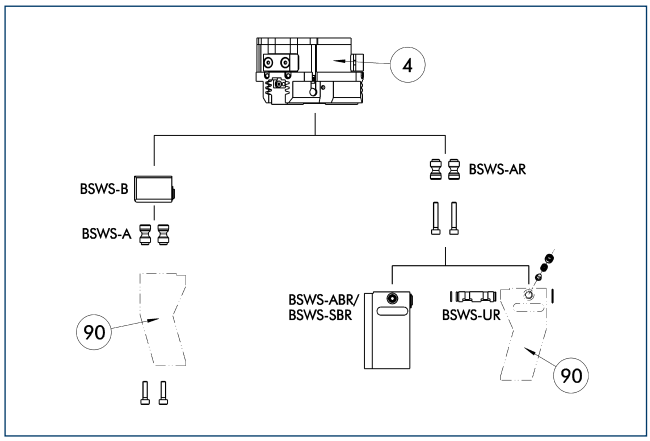

(4) Gripper

(90) Customized gripper fingers

There are various jaw quick-change systems available for the grippers. For detailed information, refer to the appropriate product.

Description	ID	
Jaw quick-change system adapter		
BSWS-AR 125	0300095	
BSWS-A 125	0303028	
Jaw quick-change system base		
BSWS-B 125	0303029	
Finger blanks with jaw quick-change system		
BSWS-ABR-PGZN-plus 125	0300075	
BSWS-SBR-PGZN-plus 125	0300085	
Jaw quick-change system reversed		
BSWS-UR 125	0302994	

ⓘ Only the systems listed in the table can be used.

ZBA L-plus 125 intermediate jaws

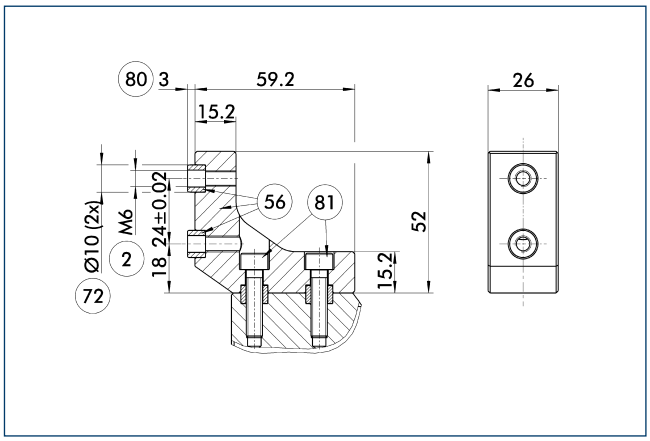

(2) Finger connection

(56) Included in delivery

(72) Fit for centering sleeves

(80) Depth of the centering sleeve hole in the mating part

(81) Not included in the scope of delivery

Optionally intermediate jaws can be used, enabling direct connection and alignment of top jaws and various standard accessories in Z-direction.

Description	ID	Material	Scope of delivery
Intermediate jaws			
ZBA-L-plus 125	0311752	Aluminum	1

UZB 125 universal intermediate jaw

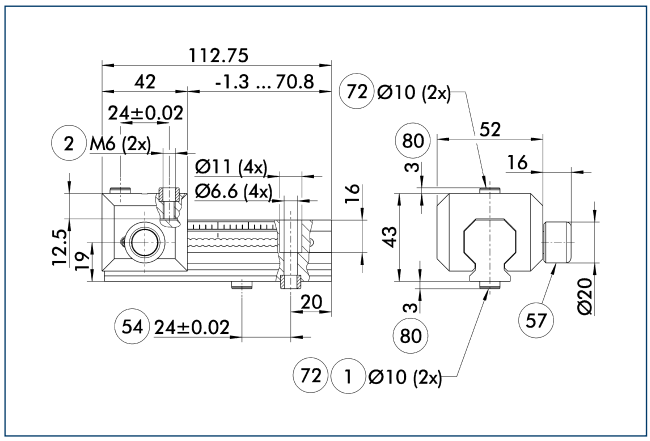

1 Gripper connection
2 Finger connection
54 Optional right or left connection
57 Locking
72 Fit for centering sleeves
80 Depth of the centering sleeve hole in the mating part

The universal intermediate jaw allows fast tool-free and reliable plugging and shifting of top jaws at the gripper.

Description	ID	Grid dimension [mm]
Universal intermediate jaw		
UZB 125	0300045	3
UZB-S 125	5518273	3
Finger blanks		
ABR-PGZN-plus 125	0300013	
SBR-PGZN-plus 125	0300023	

FMS-ZBA / ZBP 125 force-measuring jaws

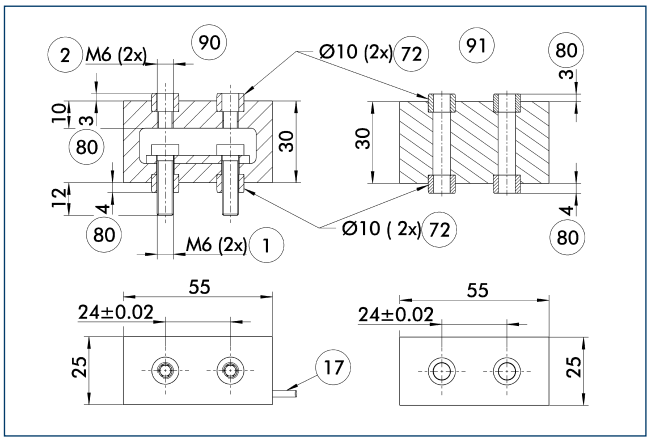

1 Gripper connection
2 Finger connection
17 Cable outlet
72 Fit for centering sleeves
80 Depth of the centering sleeve hole in the mating part
90 Active intermediate jaws
91 Passive intermediate jaws

Force measuring jaws measure gripping forces, but can also determine workpiece weights or dimensional deviations. There are active and passive intermediate jaws (FMS-ZBA or FMS-ZBP). At least one active force measuring jaw is required per gripper, the rest can be passive. For each active jaw, a FMS-A control unit and a FMS-AK connection cable are required.

Description	ID	Often combined
Active intermediate jaws		
FMS-ZBA 125	0301838	
Passive intermediate jaws		
FMS-ZBP 125	0301839	
Connection cables		
FMS-AK0200	0301820	●
FMS-AK0500	0301821	
FMS-AK1000	0301822	
FMS-AK2000	0301823	
Electronic processor		
FMS-A1	0301810	

ABR- / SBR-PGZN-plus 125 finger blanks

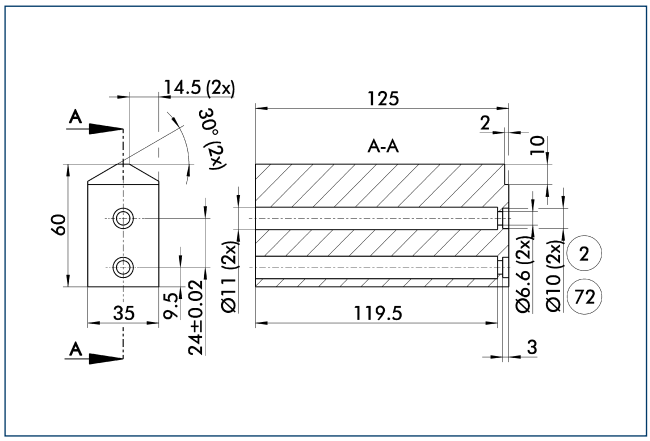

(2) Finger connection (72) Fit for centering sleeves

Finger blanks for customized subsequent machining.

Description	ID	Material	Scope of delivery
Finger blanks			
ABR-PGZN-plus 125	0300013	Aluminum	1
SBR-PGZN-plus 125	0300023	16MnCr15	1

Inductive proximity switches

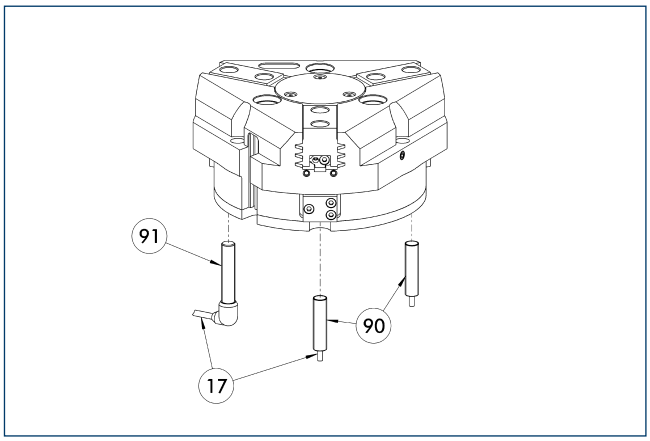

(17) Cable outlet (91) IN ...-SA sensor
(90) IN ... sensor

Directly mounted limit position monitor.

Description	ID	Often combined
Inductive proximity switches		
IN 80-S-M12	0301578	
IN 80-S-M8	0301478	●
INK 80-S	0301550	
Inductive proximity switches with lateral outlet		
IN 80-S-M12-SA	0301587	
IN 80-S-M8-SA	0301483	●
INK 80-S-SA	0301566	
Cable extensions		
KV BG12-SG12 3P-0030-PNP	0301999	
KV BG12-SG12 3P-0060-PNP	0301998	
KV BW08-SG08 3P-0030-PNP	0301495	
KV BW08-SG08 3P-0100-PNP	0301496	
KV BW08-SG08 3P-0200-PNP	0301497	●
KV BW12-SG12 3P-0030-PNP	0301595	
KV BW12-SG12 3P-0100-PNP	0301596	
KV BW12-SG12 3P-0200-PNP	0301597	
Clip for plug / socket		
CLI-M12	0301464	
CLI-M8	0301463	
Connection cables		
KA BG08-L 3P-0300-PNP	0301622	●
KA BG08-L 3P-0500-PNP	0301623	
KA BG12-L 3P-0500-PNP	30016369	
KA BW08-L 3P-0300-PNP	0301594	
KA BW08-L 3P-0500-PNP	0301502	
KA BW12-L 3P-0300-PNP	0301503	
KA BW12-L 3P-0500-PNP	0301507	
Sensor distributor		
V2-M8	0301775	●
V2-M12	0301776	●
V4-M12	0301747	
V4-M8	0301746	

ⓘ Two sensors (closer/S) are required for each unit, plus extension cables as an option. Please note the minimum permitted bending radii for the sensor cables, which are generally 35 mm.

Flexible position sensor

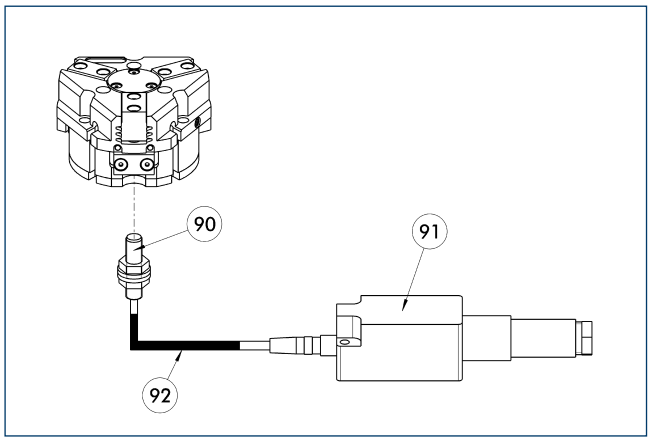

(90) FPS-S sensor
(91) FPS-F5 / -F5 T electronic processor
(92) Cable extensions

Flexible position monitoring of up to five positions.

Description	ID	Often combined
Mounting kit for FPS		
AS-FPS-PGZN-plus 125-1/PZB 160	0301636	
AS-FPS-PGZN-plus 125-2	0301637	
Electronic processor		
FPS-F5	0301805	●
FPS-F5 T	0301807	
Sensor		
FPS-S M8	0301704	
Clip for plug / socket		
CLI-M8	0301463	

ⓘ When using a FPS system, a FPS sensor (FPS-S) and a control unit (FPS-F5 / F5 T) are required for each gripper as well as a mounting kit (AS), if listed. Cable extensions (KV) are available as options in the "Accessories" catalog section.

MMS electronic magnetic switches

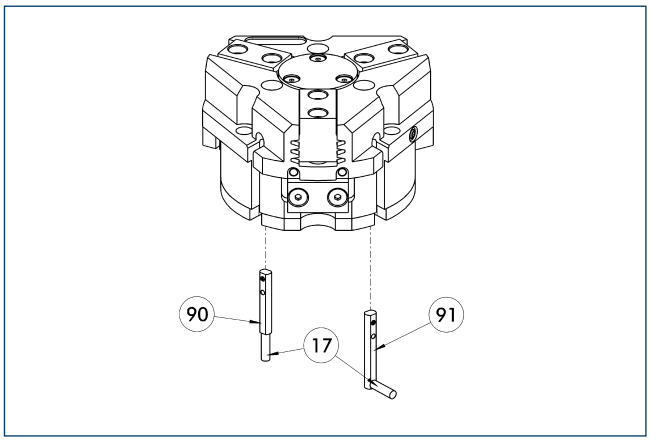

(17) Cable outlet
(90) MMS 22... sensor
(91) MMS 22...-SA sensor

End position monitoring for mounting in the C-slot.

Description	ID	Often combined
MMS electronic magnetic switches		
MMS 22-S-M8-PNP	0301032	●
MMSK 22-S-PNP	0301034	
MMS electronic magnetic switches with lateral cable outlet		
MMS 22-S-M8-PNP-SA	0301042	●
MMSK 22-S-PNP-SA	0301044	
Reed switches		
RMS 22-S-M8	0377720	●
Cable extensions		
KV BW08-SG08 3P-0030-PNP	0301495	
KV BW08-SG08 3P-0100-PNP	0301496	
KV BW08-SG08 3P-0200-PNP	0301497	●
Clip for plug / socket		
CLI-M8	0301463	
Connection cables		
KA BG08-L 3P-0300-PNP	0301622	●
KA BG08-L 3P-0500-PNP	0301623	
KA BW08-L 3P-0300-PNP	0301594	
KA BW08-L 3P-0500-PNP	0301502	
RSS radio sensor system		
RSS-T2	0377710	
Sensor distributor		
V2-M8	0301775	●
V4-M8	0301746	
V8-M8	0301751	

ⓘ Two sensors (closer/S) are required for each unit, plus extension cables as an option. Please note the minimum permitted bending radii for the sensor cables, which are generally 35 mm.

MMS PI1 programmable magnetic switches

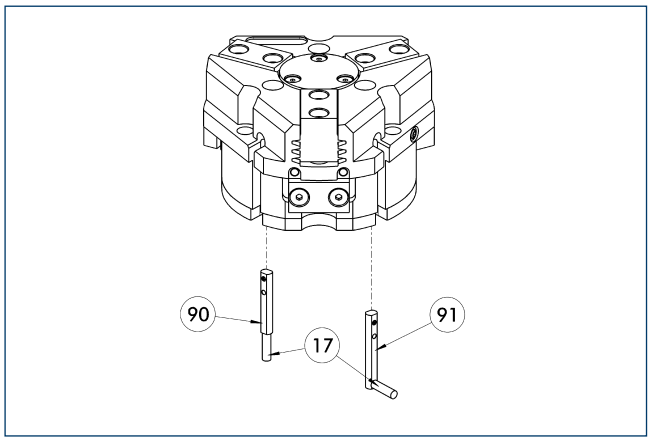

(17) Cable outlet
(91) MMS 22...-PI1-...-SA sensor
(90) MMS 22...-PI1-... sensor

Position query with one programmable position per sensor and electronics integrated in sensor. Programmable via MT magnet teaching tool (included in the scope of delivery) or ST plug teaching tool (optional). Limit position query mounted in C-groove. If the ST plug teaching tools are listed in the table, teaching can only take place with the ST plug teaching tools.

Description	ID	Often combined
MMS PI1 programmable magnetic switches		
MMS 22-PI1-S-M8-PNP	0301160	●
MMSK 22-PI1-S-PNP	0301162	
MMS PI1-HD programmable magnetic switches with stainless steel housing		
MMS 22-PI1-S-M8-PNP-HD	0301110	●
MMSK 22-PI1-S-PNP-HD	0301112	
MMS PI1 programmable magnetic switches with lateral cable outlet		
MMS 22-PI1-S-M8-PNP-SA	0301166	●
MMSK 22-PI1-S-PNP-SA	0301168	

ⓘ Two sensors (closer/S) are required for each unit, plus extension cables as an option. Please note the minimum permitted bending radii for the sensor cables, which are generally 35 mm. Connection cable, cable extensions, and sensor distributors can be found in the table for the MMS 22.

MMS PI2 programmable magnetic switches

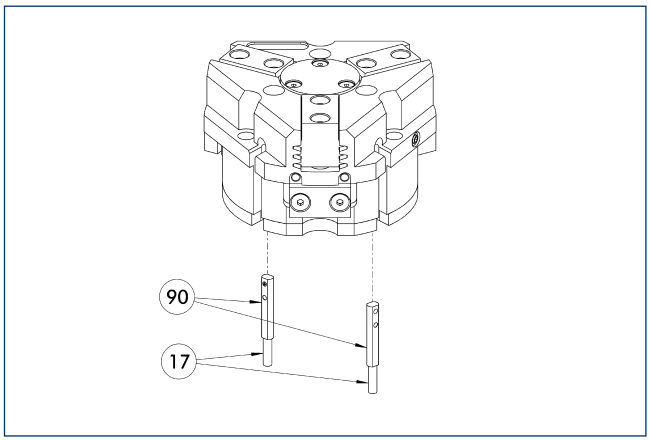

(17) Cable outlet
(90) MMS 22...-PI2-... sensor

Position query with two programmable positions per sensor and electronics integrated in sensor. Programmable via MT magnet teaching tool (included in the scope of delivery) or ST plug teaching tool (optional). Limit position query mounted in C-groove. If the ST plug teaching tools are listed in the table, teaching can only take place with the ST plug teaching tools.

Description	ID	Often combined
MMS PI2 programmable magnetic switches		
MMS 22-PI2-S-M8-PNP	0301180	●
MMSK 22-PI2-S-PNP	0301182	
MMS PI2-HD programmable magnetic switches with stainless steel housing		
MMS 22-PI2-S-M8-PNP-HD	0301130	●
MMSK 22-PI2-S-PNP-HD	0301132	

ⓘ Per unit one sensor (closer/S) is required, optionally a cable extension. Please note the minimum permitted bending radii for the sensor cables, which are generally 35 mm. Connection cable, cable extensions, and sensor distributors can be found in the table for the MMS-P 22.

MMS-P programmable magnetic switches

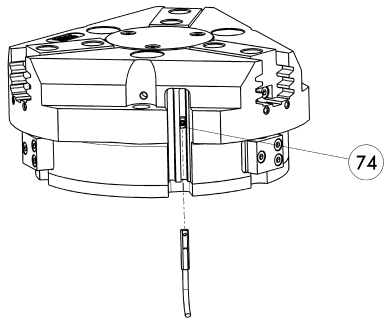

74 Stop for MMS-P

Position monitoring with two programmable positions per sensor. The end position monitoring is mounted in the C-slot.

Description	ID	Often combined
MMS-P programmable magnetic switches		
MMSK-P 22-S-PNP	0301371	
MMS-P 22-S-M8-PNP	0301370	●
Clip for plug / socket		
CLI-M8	0301463	
Connection cables		
KA BG08-L 4P-0500	0307767	●
KA BG08-L 4P-1000	0307768	
KA BW08-L 4P-0500	0307765	
KA BW08-L 4P-1000	0307766	
Sensor distributor		
V2-M8-4P-2XM8-3P	0301380	

ⓘ Per unit one sensor (closer/S) is required, optionally a cable extension. Please note the minimum permitted bending radii for the sensor cables, which are generally 35 mm.

APS-Z80 analog position sensor

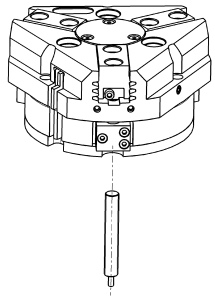

Contactlessly measuring, analog multi-position monitoring for any number of positions.

Description	ID	Often combined
Mounting kit for APS-Z80		
AS-APS-Z80-PGZN-plus 125-1	0302111	
AS-APS-Z80-PGZN-plus 125-2	0302112	
Sensor		
APS-Z80-K	0302072	
APS-Z80-M8	0302070	●

ⓘ When using an APS system, one mounting kit (AS-APS-Z80) and one APS-Z80 sensor is required per gripper.

APS-M1 analog position sensor

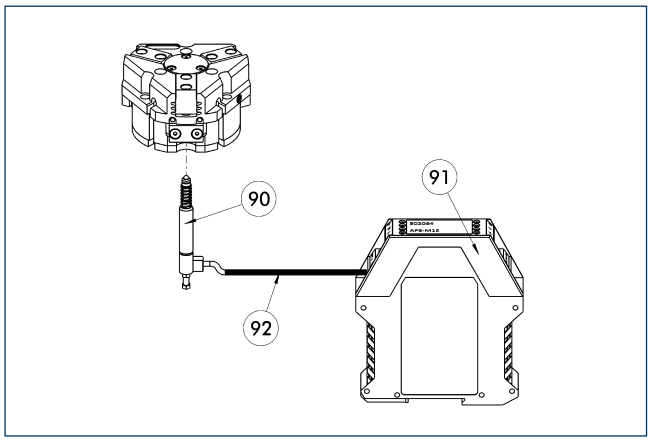

90 APS-M1S sensor
91 APS-M1E electronic processor
92 APS-K extension cable

Analog multi position monitoring for any desired positions.

Description	ID	Often combined
Mounting kit for APS-M1		
AS-APS-M1-PGZN-plus 125-1	0302081	
AS-APS-M1-PGZN-plus 125-2	0302082	
Connection cables		
APS-K0200	0302066	●
APS-K0700	0302068	
Electronic processor		
APS-M1E	0302064	
Sensor		
APS-M1S	0302062	

ⓘ When using an APS system, for each gripper a mounting kit (AS-APS-M1), an APS-M1S sensor (incl. 3 m cable) as well as an electronics (APS-M1e) are required. An extension cable (APS-K) can be connected between the sensor and the electronics as an option. The max. cable length between the sensor and the electronics is 10 m, between the electronics and their control unit (PLC) it is max. 1 m.

Cylindrical reed switches

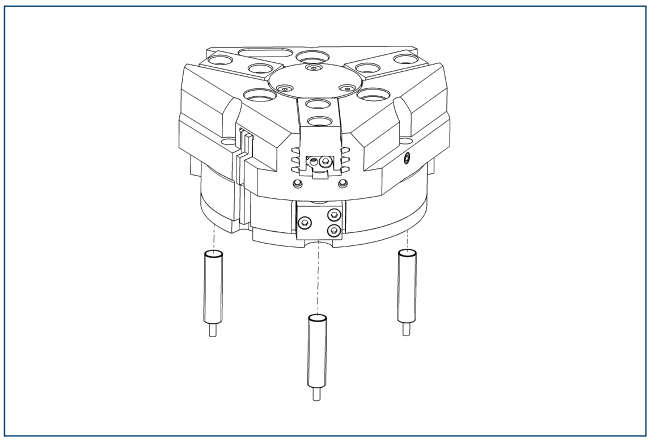

Limit position monitor can be mounted with mounting kit.

Description	ID	
Mounting kit for proximity switch		
AS-RMS 80 PGN/PZN-plus 100/125	0377726	
Reed switches		
RMS 80-S-M8	0377721	

ⓘ Two sensors (closer/S) are required for each unit, plus extension cables as an option. This mounting kit needs to be ordered optionally as an accessory. Two mounting kits are required per gripper. Please note the minimum permitted bending radii for the sensor cables, which are generally 35 mm.

PZN-plus 160

SCHUNK Grippers pneumatic | 3-Finger Centric Grippers | Universal Gripper

Gripping force, O.D. gripping

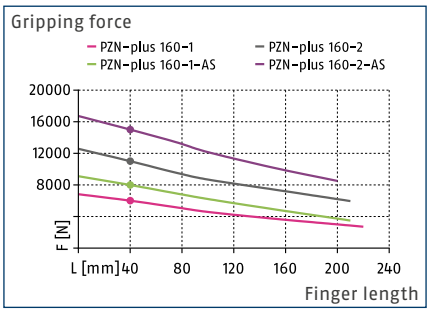

Gripping force, I.D. gripping

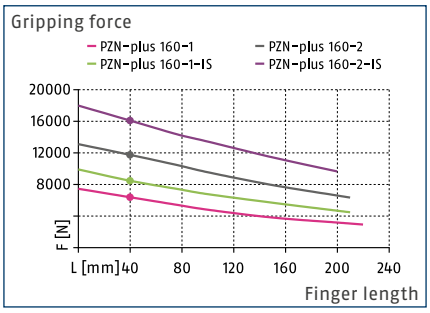

Finger load

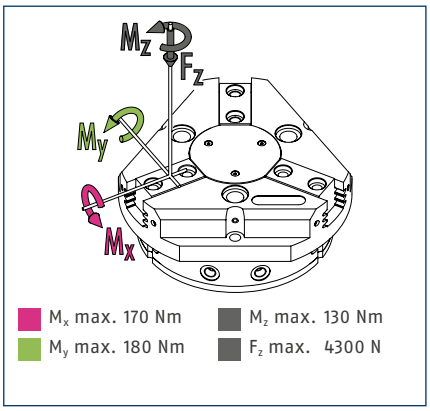

ⓘ The indicated moments and forces are static values, apply per base jaw and may occur simultaneously. M_y may arise in addition to the moment generated by the gripping force itself. If the max. permitted finger weight is exceeded, it is impreative to throttle the air supply so that the jaw movement occurs without any hitting or bouncing. Service life may be reduced.

Technical data

Description		PZN-plus 160-1	PZN-plus 160-2	PZN-plus 160-1-AS	PZN-plus 160-2-AS	PZN-plus 160-1-IS	PZN-plus 160-2-IS
ID		0303314	0303414	0303514	0303614	0303544	0303644
Stroke per jaw	[mm]	16	8	16	8	16	8
Closing- / opening force	[N]	6000/6390	11000/11750	7990/-	15010/-	-/8480	-/16090
min. spring force	[N]			1990	4010	2090	4340
Weight	[kg]	5.6	5.6	8	8	8	8
Recommended workpiece weight	[kg]	30	55	30	55	30	55
Fluid consumption per double stroke	[cm³]	520	520	875	875	875	875
min. / max. operating pressure	[bar]	2/8	2/8	4/6.5	4/6.5	4/6.5	4/6.5
Nominal operating pressure	[bar]	6	6	6	6	6	6
Closing- / opening time	[s]	0.5/0.5	0.5/0.5	0.4/0.8	0.4/0.8	0.8/0.4	0.8/0.4
Closing- / opening time only with spring	[s]			0.80	0.80	0.80	0.80
max. permitted finger length	[mm]	220	210	210	200	210	200
max. permitted weight per finger	[kg]	3.5	3.5	3.5	3.5	3.5	3.5
IP class		40	40	40	40	40	40
min. / max. ambient temperature	[°C]	5/90	5/90	5/90	5/90	5/90	5/90
Repeat accuracy	[mm]	0.02	0.02	0.02	0.02	0.02	0.02
Cleanroom class ISO 14644-1		5	5	5	5	5	5
Options and their characteristics							
Dust-tight version		37303314	37303414	37303514	37303614	37303544	37303644
IP class		64	64	64	64	64	64
Weight	[kg]	6.5	6.5	8.9	8.9	8.9	8.9
Anti-corrosion version		38303314	38303414	38303514	38303614	38303544	38303644
High-temperature version		39303314	39303414	39303514	39303614	39303544	39303644
min. / max. ambient temperature	[°C]	5/130	5/130	5/130	5/130	5/130	5/130
Force intensified version		0372205	0372215	0372225		0372245	
Closing- / opening force	[N]	10800/11500	19800/21150	12730/-		-/13590	
Weight	[kg]	7.8	7.8	9.6		9.6	
Maximum pressure	[bar]	6	6	6		6	
max. permitted finger length	[mm]	125	100	100		100	
Precision version		0303344	0303444	0303494	0303594		

ⓘ The full gripping force according to the data table is only realised after around 100 gripping cycles.

Main view

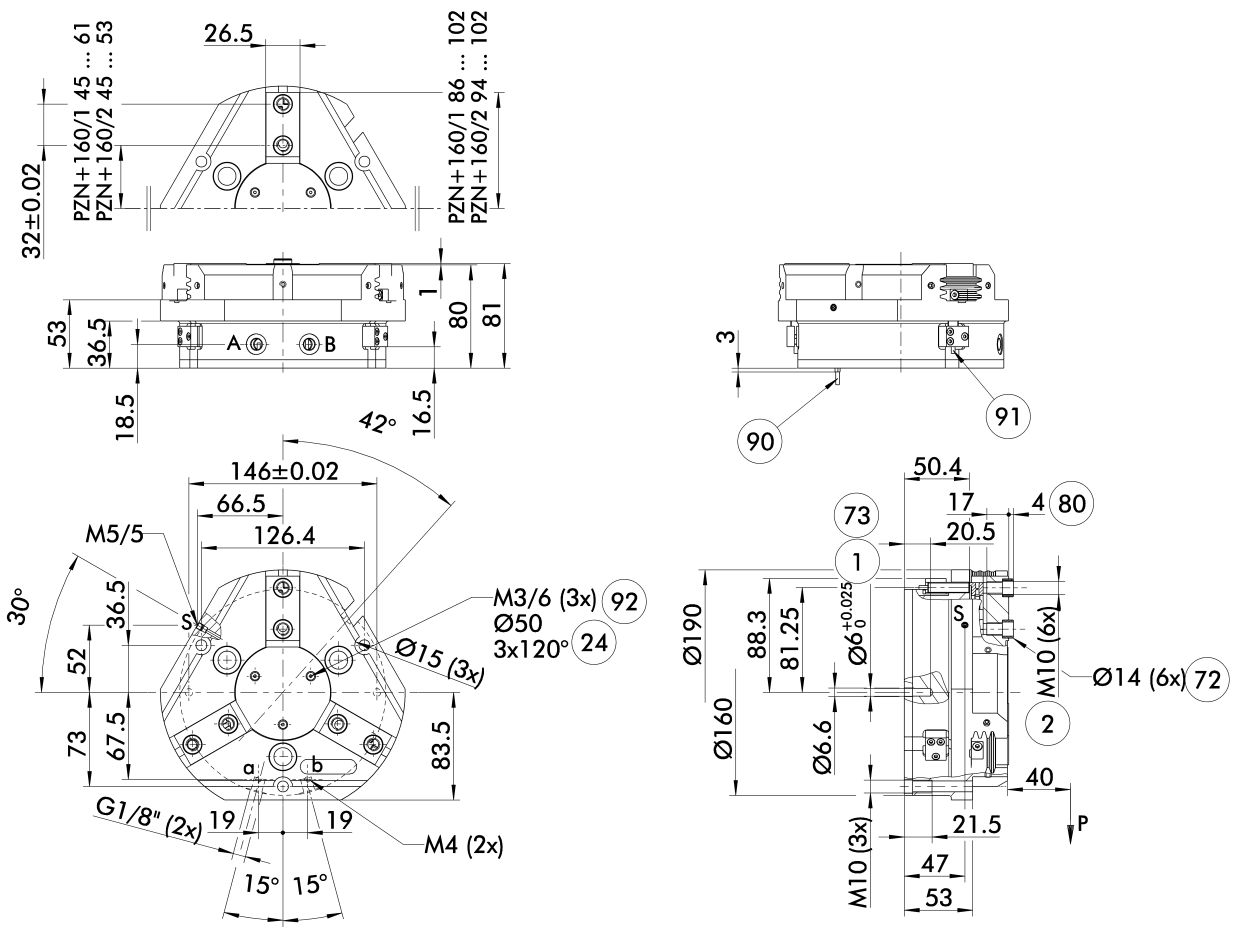

The drawing shows the gripper in the basic version with closed jaws, without dimensional consideration of the options described below.

ⓘ The SDV-P pressure maintenance valve can also be used for I.D. or O.D. gripping alternatively or in addition to the spring-loaded, mechanical gripping force maintenance device (see catalog section on "Accessories").

A, a Main / direct connection, gripper opening

B, b Main / direct connection, gripper closing

S Air purge connection (0.5 ... 1 bar)

(1) Gripper connection

(2) Finger connection

(24) Bolt circle

(72) Fit for centering sleeves

(73) Fit for centering pins

(80) Depth of the centering sleeve hole in the mating part

(90) MMS 22... sensor

(91) IN ... sensor

(92) Thread below the cover for fastening external attachments

Hose-free direct connection M4

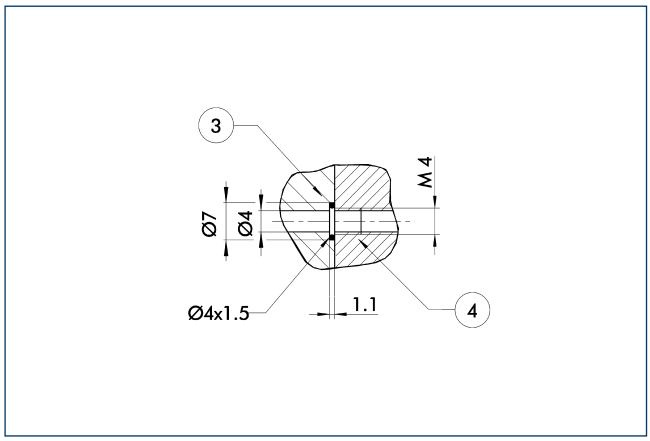

(3) Adapter (4) Gripper

The direct connection is used for supplying compressed air without hoses. Instead, the pressure medium is fed through bore-holes in the mounting plate.

Gripping force maintenance device AS / IS

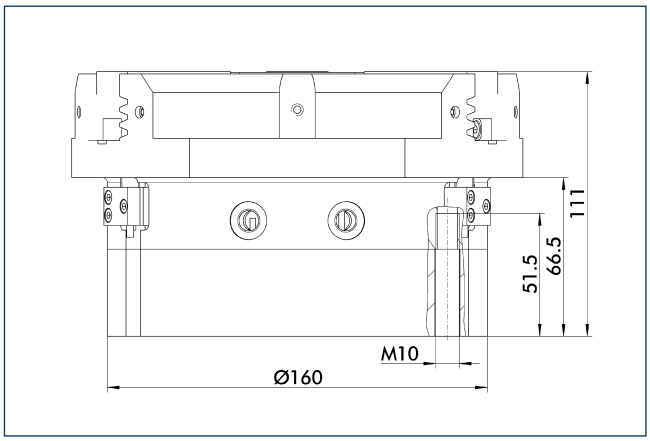

The mechanical maintenance of gripping force also assures a minimum gripping force in the case of a loss of pressure. With the AS / S variant, this acts as a closing force, and as an opening force for the IS variant. The maintenance of gripping force element can also be used as a means for increasing gripping force or for single actuated gripping.

Dust-tight version

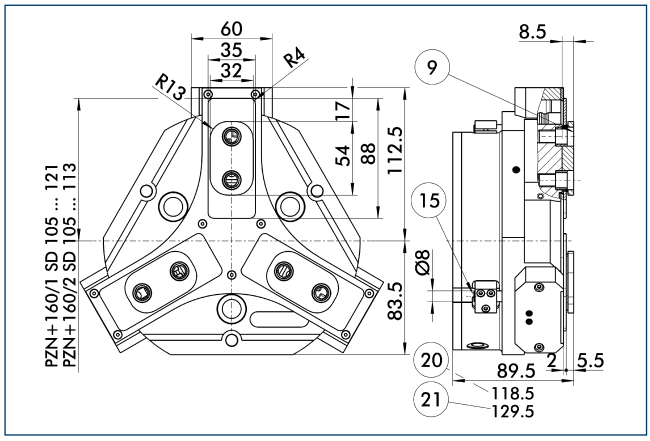

(9) For mounting screw connection diagram, see basic version
(15) Sealing bolt
(20) For AS / IS version
(21) For KVZ version

The "dust-protection" option increases the degree of protection against penetrating substances. The screw connection diagram shifts by the height of the intermediate jaw. The finger length is still measured from the upper edge of the gripper housing.

Force intensified version

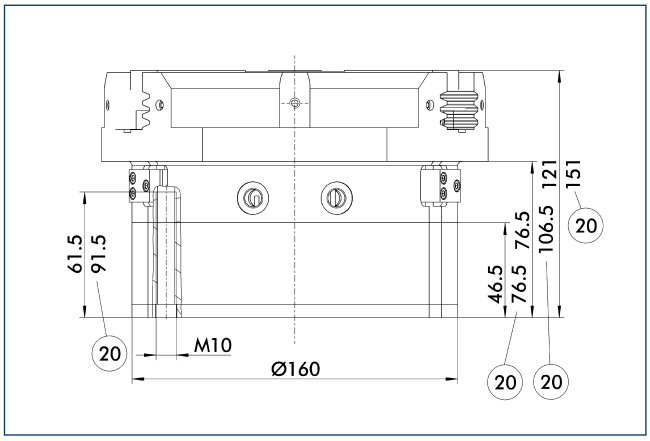

(20) For AS / IS version

The KVZ power booster cylinder increases gripping forces for opening and closing. A second piston connected in a series increases the force on the diagonal pull for this purpose. If applicable, observe the additional installation height for combination with an element for maintenance of gripping force. The force-intensifying version of the gripper can only be attached with screws from below via the provided mounting holes.

Precision version

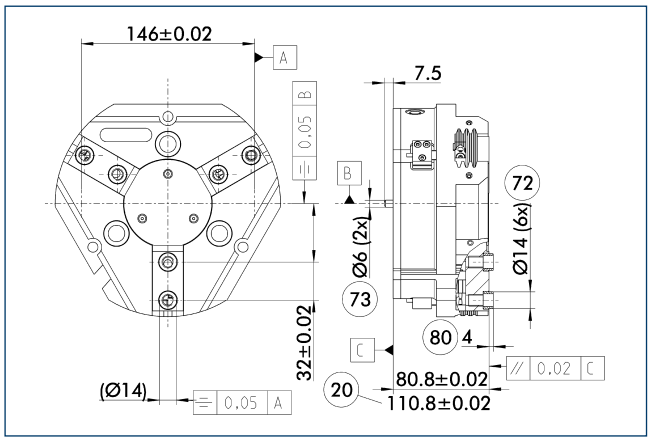

(20) For AS / IS version
(72) Fit for centering sleeves
(73) Fit for centering pins
(80) Depth of the centering sleeve hole in the mating part

The indicated tolerances just refer to the types of precision versions shown in the chart of technical specifications. All other types of precision versions are available on request.

Spring-loaded pressure piece

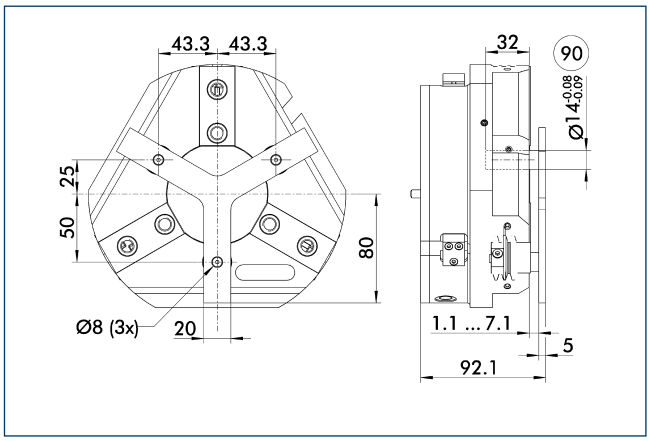

(90) Guide pin

For spring-supported positioning of the workpiece against a stop after the gripper has opened. Especially developed for loading machines.

Description	ID	Stroke [mm]	Min. force [N]
Spring-loaded pressure piece			
A-PZN-plus/DPZ-plus 160	0303724	6	205

ⓘ The pressure piece cannot be combined with the dust-tight option. Please ask for details about a special pressure piece.

SDV-P pressure maintenance valve

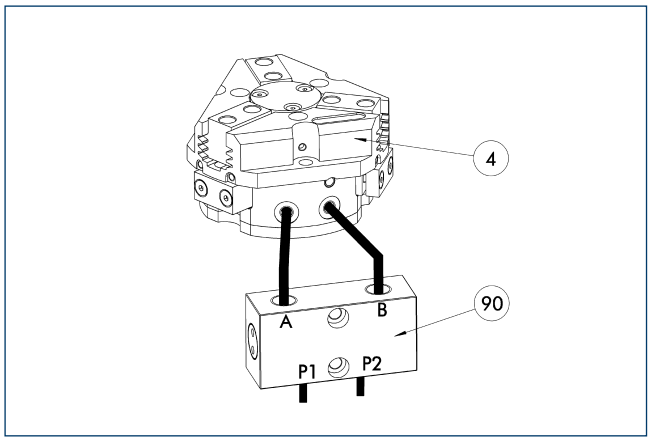

(4) Gripper
(90) SDV-P pressure maintenance valve

The SDV-P pressure maintenance valves ensure that the pressure in the piston chamber of pneumatic gripping, rotary, linear, and quick-change modules is maintained temporarily during an emergency stop.

Description	ID	
Pressure maintenance valve		
SDV-P 04	0403130	

HUE PZN-plus 160 protective cover

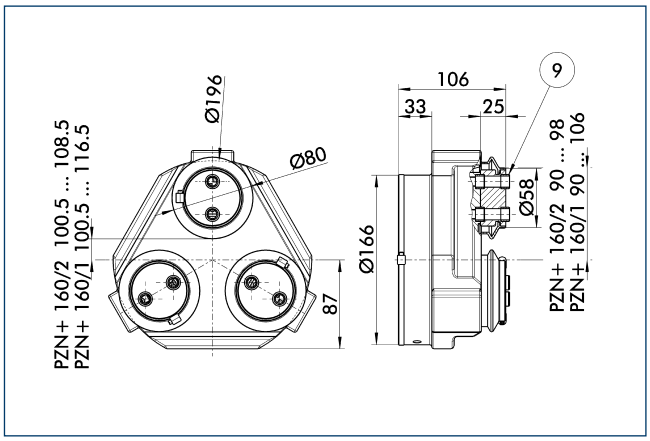

(9) For mounting screw connection diagram, see basic version

The HUE protective cover completely protects the gripper against external influences up to IP65 if an additional sealing of the cover bottom is provided as part of the application. The mounting diagram shifts by the height of the intermediate jaw.

Description	ID	Cleanroom class ISO 14644-1	IP class
Protection cover			
HUE PZN-plus 160	0303484	2	65

BSWS jaw quick-change systems

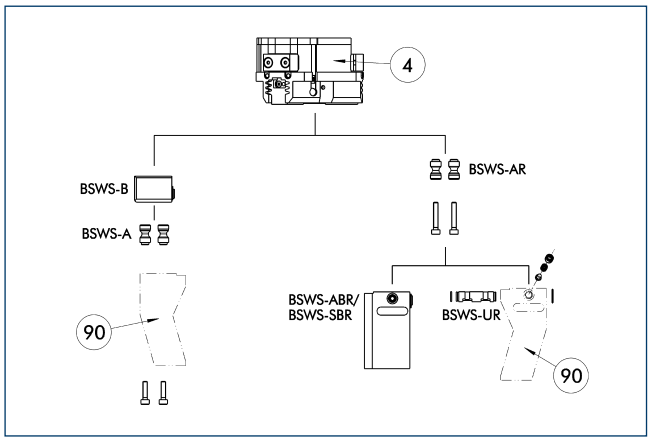

(4) Gripper

(90) Customized gripper fingers

There are various jaw quick-change systems available for the grippers. For detailed information, refer to the appropriate product.

Description	ID	
Jaw quick-change system adapter		
BSWS-AR 160	0300096	
BSWS-A 160	0303030	
Jaw quick-change system base		
BSWS-B 160	0303031	
Finger blanks with jaw quick-change system		
BSWS-ABR-PGZN-plus 160	0300076	
BSWS-SBR-PGZN-plus 160	0300086	
Jaw quick-change system reversed		
BSWS-UR 160	0302995	

ⓘ Only the systems listed in the table can be used.

ZBA L-plus 160 intermediate jaws

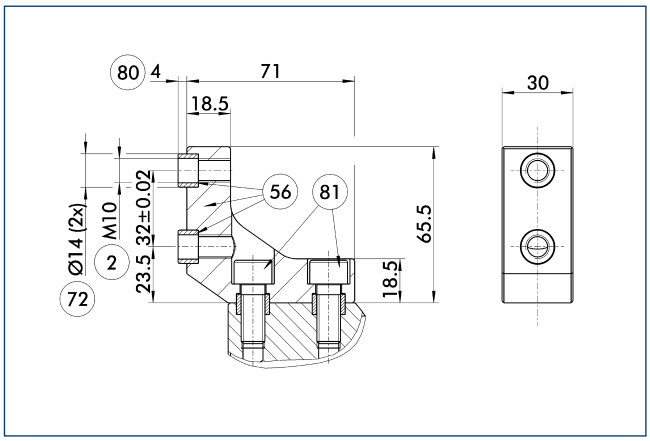

(2) Finger connection

(56) Included in delivery

(72) Fit for centering sleeves

(80) Depth of the centering sleeve hole in the mating part

(81) Not included in the scope of delivery

Optionally intermediate jaws can be used, enabling direct connection and alignment of top jaws and various standard accessories in Z-direction.

Description	ID	Material	Scope of delivery
Intermediate jaws			
ZBA-L-plus 160	0311762	Aluminum	1

UZB 160 universal intermediate jaw

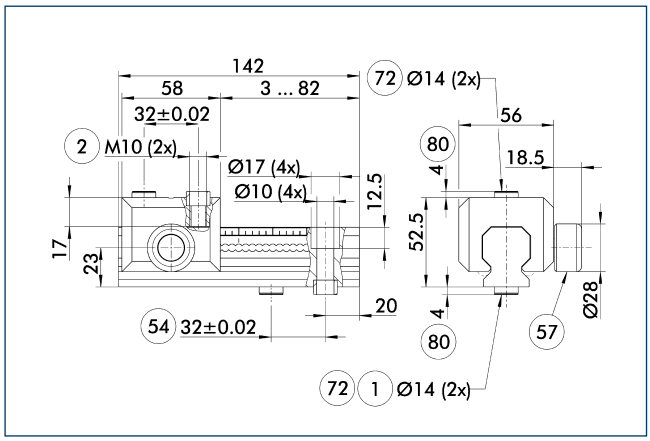

1 Gripper connection
2 Finger connection
54 Optional right or left connection
57 Locking
72 Fit for centering sleeves
80 Depth of the centering sleeve hole in the mating part

The universal intermediate jaw allows fast tool-free and reliable plugging and shifting of top jaws at the gripper.

Description	ID	Grid dimension [mm]
Universal intermediate jaw		
UZB 160	0300046	4
UZB-S 160	5518274	4
Finger blanks		
ABR-PGZN-plus 160	0300014	
SBR-PGZN-plus 160	0300024	

FMS-ZBA / ZBP 160 force-measuring jaws

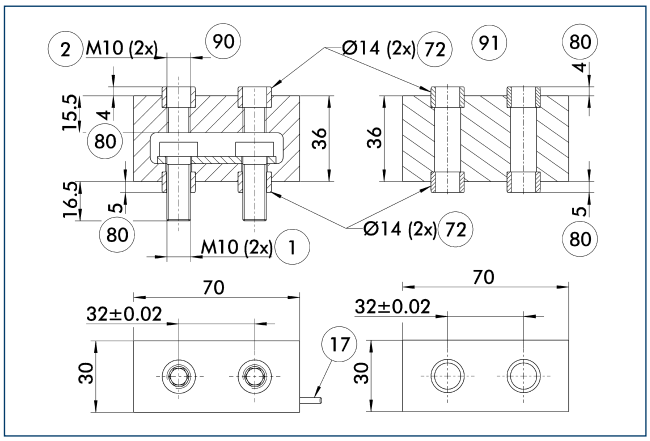

1 Gripper connection
2 Finger connection
17 Cable outlet
72 Fit for centering sleeves
80 Depth of the centering sleeve hole in the mating part
90 Active intermediate jaws
91 Passive intermediate jaws

Force measuring jaws measure gripping forces, but can also determine workpiece weights or dimensional deviations. There are active and passive intermediate jaws (FMS-ZBA or FMS-ZBP). At least one active force measuring jaw is required per gripper, the rest can be passive. For each active jaw, a FMS-A control unit and a FMS-AK connection cable are required.

Description	ID	Often combined
Active intermediate jaws		
FMS-ZBA 160	0301840	
Passive intermediate jaws		
FMS-ZBP 160	0301841	
Connection cables		
FMS-AK0200	0301820	●
FMS-AK0500	0301821	
FMS-AK1000	0301822	
FMS-AK2000	0301823	
Electronic processor		
FMS-A2	0301811	

ABR- / SBR-PGZN-plus 160 finger blanks

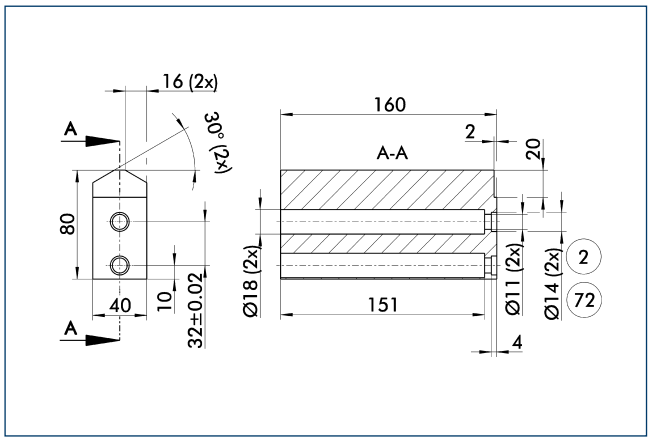

(2) Finger connection (72) Fit for centering sleeves

Finger blanks for customized subsequent machining.

Description	ID	Material	Scope of delivery
Finger blanks			
ABR-PGZN-plus 160	0300014	Aluminum	1
SBR-PGZN-plus 160	0300024	16MnCr5	1

Inductive proximity switches

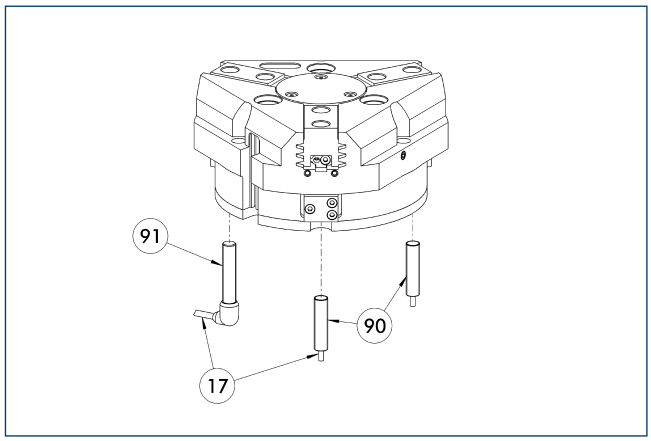

(17) Cable outlet (91) IN ...-SA sensor
(90) IN ... sensor

Directly mounted limit position monitor.

Description	ID	Often combined
Inductive proximity switches		
IN 80-S-M12	0301578	
IN 80-S-M8	0301478	●
INK 80-S	0301550	
Inductive proximity switches with lateral outlet		
IN 80-S-M12-SA	0301587	
IN 80-S-M8-SA	0301483	●
INK 80-S-SA	0301566	
Cable extensions		
KV BG12-SG12 3P-0030-PNP	0301999	
KV BG12-SG12 3P-0060-PNP	0301998	
KV BW08-SG08 3P-0030-PNP	0301495	
KV BW08-SG08 3P-0100-PNP	0301496	
KV BW08-SG08 3P-0200-PNP	0301497	●
KV BW12-SG12 3P-0030-PNP	0301595	
KV BW12-SG12 3P-0100-PNP	0301596	
KV BW12-SG12 3P-0200-PNP	0301597	
Clip for plug / socket		
CLI-M12	0301464	
CLI-M8	0301463	
Connection cables		
KA BG08-L 3P-0300-PNP	0301622	●
KA BG08-L 3P-0500-PNP	0301623	
KA BG12-L 3P-0500-PNP	30016369	
KA BW08-L 3P-0300-PNP	0301594	
KA BW08-L 3P-0500-PNP	0301502	
KA BW12-L 3P-0300-PNP	0301503	
KA BW12-L 3P-0500-PNP	0301507	
Sensor distributor		
V2-M8	0301775	●
V2-M12	0301776	●
V4-M12	0301747	
V4-M8	0301746	

ⓘ Two sensors (closer/S) are required for each unit, plus extension cables as an option. Please note the minimum permitted bending radii for the sensor cables, which are generally 35 mm.

Flexible position sensor

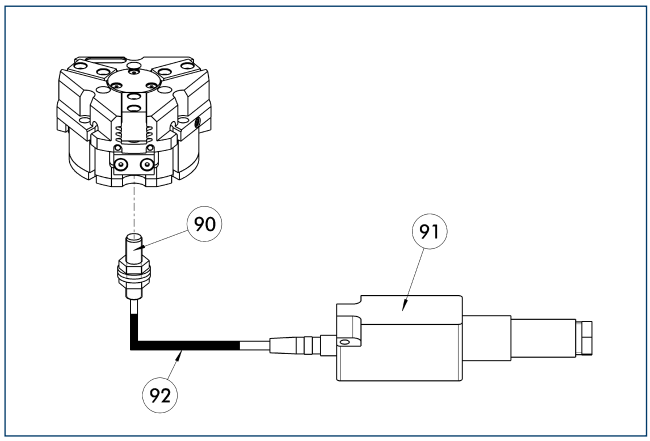

(90) FPS-S sensor
(91) FPS-F5 / -F5 T electronic processor
(92) Cable extensions

Flexible position monitoring of up to five positions.

Description	ID	Often combined
Mounting kit for FPS		
AS-FPS-PGZN-plus 160-1	0301638	
AS-FPS-PGZN-plus 160-2	0301639	
Electronic processor		
FPS-F5	0301805	●
FPS-F5 T	0301807	
Sensor		
FPS-S M8	0301704	
Clip for plug / socket		
CLI-M8	0301463	

ⓘ When using a FPS system, a FPS sensor (FPS-S) and a control unit (FPS-F5 / F5 T) are required for each gripper as well as a mounting kit (AS), if listed. Cable extensions (KV) are available as options in the "Accessories" catalog section.

MMS electronic magnetic switches

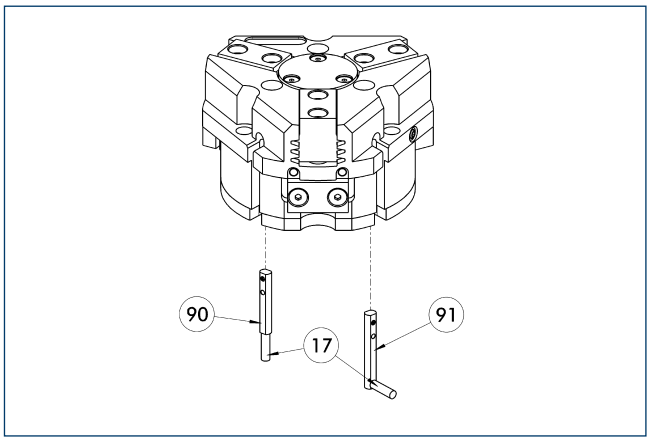

(17) Cable outlet
(90) MMS 22... sensor
(91) MMS 22...-SA sensor

End position monitoring for mounting in the C-slot.

Description	ID	Often combined
MMS electronic magnetic switches		
MMS 22-S-M8-PNP	0301032	●
MMSK 22-S-PNP	0301034	
MMS electronic magnetic switches with lateral cable outlet		
MMS 22-S-M8-PNP-SA	0301042	●
MMSK 22-S-PNP-SA	0301044	
Reed switches		
RMS 22-S-M8	0377720	●
Cable extensions		
KV BW08-SG08 3P-0030-PNP	0301495	
KV BW08-SG08 3P-0100-PNP	0301496	
KV BW08-SG08 3P-0200-PNP	0301497	●
Clip for plug / socket		
CLI-M8	0301463	
Connection cables		
KA BG08-L 3P-0300-PNP	0301622	●
KA BG08-L 3P-0500-PNP	0301623	
KA BW08-L 3P-0300-PNP	0301594	
KA BW08-L 3P-0500-PNP	0301502	
RSS radio sensor system		
RSS-T2	0377710	
Sensor distributor		
V2-M8	0301775	●
V4-M8	0301746	
V8-M8	0301751	

ⓘ Two sensors (closer/S) are required for each unit, plus extension cables as an option. Please note the minimum permitted bending radii for the sensor cables, which are generally 35 mm.

MMS PI1 programmable magnetic switches

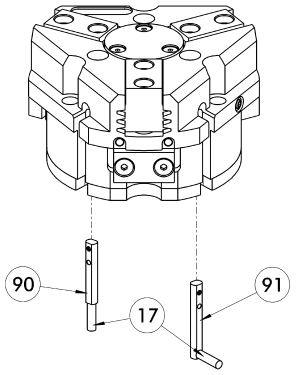

17 Cable outlet
91 MMS 22...-PI1-...-SA sensor
90 MMS 22...-PI1-... sensor

Position query with one programmable position per sensor and electronics integrated in sensor. Programmable via MT magnet teaching tool (included in the scope of delivery) or ST plug teaching tool (optional). Limit position query mounted in C-groove. If the ST plug teaching tools are listed in the table, teaching can only take place with the ST plug teaching tools.

Description	ID	Often combined
Plug teaching tool		
ST-MMS 22-PI1-PNP	0301025	
MMS PI1 programmable magnetic switches		
MMS 22-PI1-S-M8-PNP	0301160	●
MMSK 22-PI1-S-PNP	0301162	
MMS PI1-HD programmable magnetic switches with stainless steel housing		
MMS 22-PI1-S-M8-PNP-HD	0301110	●
MMSK 22-PI1-S-PNP-HD	0301112	
MMS PI1 programmable magnetic switches with lateral cable outlet		
MMS 22-PI1-S-M8-PNP-SA	0301166	●
MMSK 22-PI1-S-PNP-SA	0301168	

ⓘ Two sensors (closer/S) are required for each unit, plus extension cables as an option. Please note the minimum permitted bending radii for the sensor cables, which are generally 35 mm. Connection cable, cable extensions, and sensor distributors can be found in the table for the MMS 22.

MMS-P programmable magnetic switches

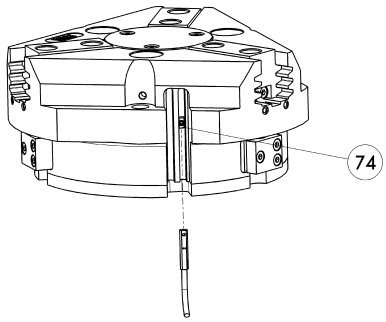

74 Stop for MMS-P

Position monitoring with two programmable positions per sensor. The end position monitoring is mounted in the C-slot.

Description	ID	Often combined
MMS-P programmable magnetic switches		
MMSK-P 22-S-PNP	0301371	
MMS-P 22-S-M8-PNP	0301370	●
Clip for plug / socket		
CLI-M8	0301463	
Connection cables		
KA BG08-L 4P-0500	0307767	●
KA BG08-L 4P-1000	0307768	
KA BW08-L 4P-0500	0307765	
KA BW08-L 4P-1000	0307766	
Sensor distributor		
V2-M8-4P-2XM8-3P	0301380	

ⓘ Per unit one sensor (closer/S) is required, optionally a cable extension. Please note the minimum permitted bending radii for the sensor cables, which are generally 35 mm.

APS-Z80 analog position sensor

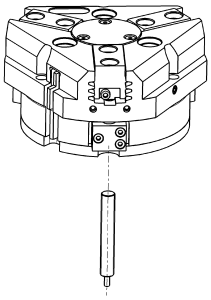

Contactlessly measuring, analog multi-position monitoring for any number of positions.

Description	ID	Often combined
Mounting kit for APS-Z80		
AS-APS-Z80-PGZN-plus 160-2	0302114	
Sensor		
APS-Z80-K	0302072	
APS-Z80-M8	0302070	●

ⓘ When using an APS system, one mounting kit (AS-APS-Z80) and one APS-Z80 sensor is required per gripper.

APS-M1 analog position sensor

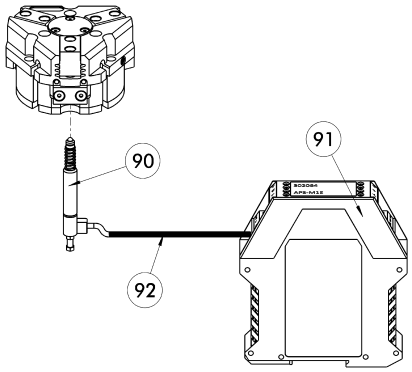

(90) APS-M1S sensor
(91) APS-M1E electronic processor
(92) APS-K extension cable

Analog multi position monitoring for any desired positions.

Description	ID	Often combined
Mounting kit for APS-M1		
AS-APS-M1-PGZN-plus 160-1/240-2	0302083	
AS-APS-M1-PGZN-plus 160-2	0302084	
Connection cables		
APS-K0200	0302066	●
APS-K0700	0302068	
Electronic processor		
APS-M1E	0302064	
Sensor		
APS-M1S	0302062	

ⓘ When using an APS system, for each gripper a mounting kit (AS-APS-M1), an APS-M1S sensor (incl. 3 m cable) as well as an electronics (APS-M1e) are required. An extension cable (APS-K) can be connected between the sensor and the electronics as an option. The max. cable length between the sensor and the electronics is 10 m, between the electronics and their control unit (PLC) it is max. 1 m.

Cylindrical reed switches

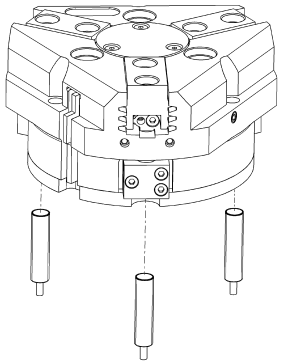

Limit position monitor can be mounted with mounting kit.

Description	ID	
Mounting kit for proximity switch		
AS-RMS 80 PGN/PZN-plus 160-380	0377727	
Reed switches		
RMS 80-S-M8	0377721	

ⓘ Two sensors (closer/S) are required for each unit, plus extension cables as an option. This mounting kit needs to be ordered optionally as an accessory. Two mounting kits are required per gripper. Please note the minimum permitted bending radii for the sensor cables, which are generally 35 mm.

PZN-plus 200

SCHUNK Grippers pneumatic | 3-Finger Centric Grippers | Universal Gripper

Gripping force, O.D. gripping

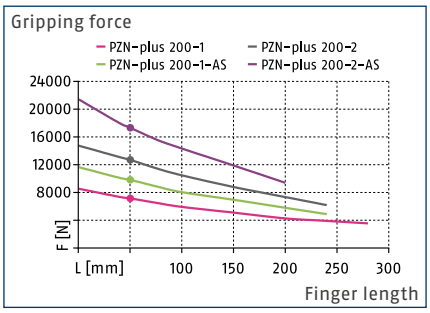

Gripping force, I.D. gripping

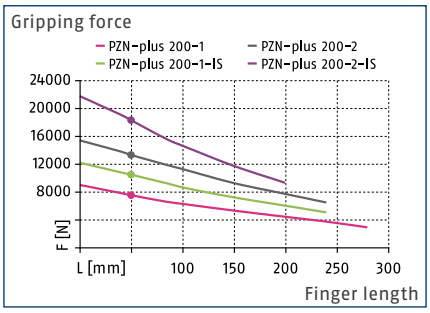

Finger load

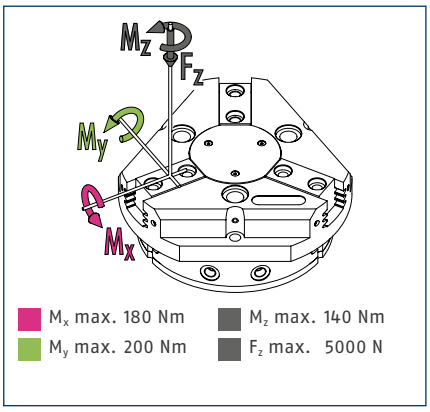

ⓘ The indicated moments and forces are static values, apply per base jaw and may occur simultaneously. M_y may arise in addition to the moment generated by the gripping force itself. If the max. permitted finger weight is exceeded, it is impreative to throttle the air supply so that the jaw movement occurs without any hitting or bouncing. Service life may be reduced.

Technical data

Description		PZN-plus 200-1	PZN-plus 200-2	PZN-plus 200-1-AS	PZN-plus 200-2-AS	PZN-plus 200-1-IS	PZN-plus 200-2-IS
ID		0303315	0303415	0303515	0303615	0303545	0303645
Stroke per jaw	[mm]	25	14	25	14	25	14
Closing- / opening force	[N]	7100/7540	12700/13330	9800/-	17380/-	-/10500	-/18330
min. spring force	[N]			2700	4680	2960	5000
Weight	[kg]	11	11	15.7	15.7	15.7	15.7
Recommended workpiece weight	[kg]	35.5	63.5	35.5	63.5	35.5	63.5
Fluid consumption per double stroke	[cm³]	1040	1040	1725	1725	1725	1725
min. / max. operating pressure	[bar]	2/8	2/8	4/6.5	4/6.5	4/6.5	4/6.5
Nominal operating pressure	[bar]	6	6	6	6	6	6
Closing- / opening time	[s]	1.2/1.2	1.2/1.2	1/1.5	1/1.5	1.5/1	1.5/1
Closing- / opening time only with spring	[s]			1.50	1.50	1.50	1.50
max. permitted finger length	[mm]	280	240	240	200	240	200
max. permitted weight per finger	[kg]	6.5	6.5	6.5	6.5	6.5	6.5
IP class		40	40	40	40	40	40
min. / max. ambient temperature	[°C]	5/90	5/90	5/90	5/90	5/90	5/90
Repeat accuracy	[mm]	0.05	0.05	0.05	0.05	0.05	0.05
Cleanroom class ISO 14644-1		5	5	5	5	5	5
Options and their characteristics							
Dust-tight version		37303315	37303415	37303515	37303615	37303545	37303645
IP class		64	64	64	64	64	64
Weight	[kg]	12	12	16.7	16.7	16.7	16.7
Anti-corrosion version		38303315	38303415	38303515	38303615	38303545	38303645
High-temperature version		39303315	39303415	39303515	39303615	39303545	39303645
min. / max. ambient temperature	[°C]	5/130	5/130	5/130	5/130	5/130	5/130
Precision version		0303345	0303445	0303495	0303595		

ⓘ The full gripping force according to the data table is only realised after around 100 gripping cycles.

Main view

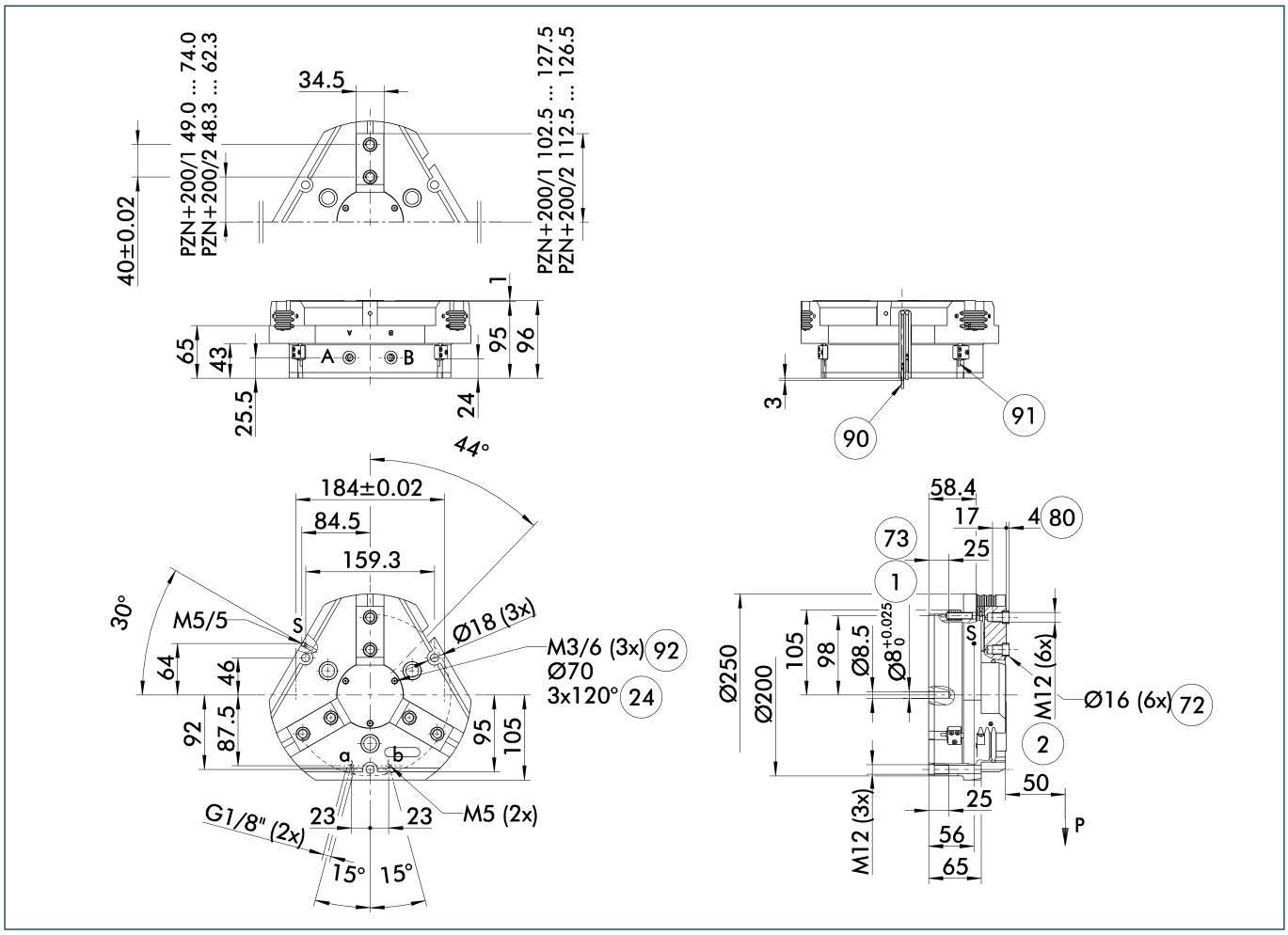

The drawing shows the gripper in the basic version with closed jaws, without dimensional consideration of the options described below.

ⓘ The SDV-P pressure maintenance valve can also be used for I.D. or O.D. gripping alternatively or in addition to the spring-loaded, mechanical gripping force maintenance device (see catalog section on "Accessories").

A, a Main / direct connection, gripper opening

B, b Main / direct connection, gripper closing

S Air purge connection (0.5 ... 1 bar)

(1) Gripper connection

(2) Finger connection

(24) Bolt circle

(72) Fit for centering sleeves

(73) Fit for centering pins

(80) Depth of the centering sleeve hole in the mating part

(90) MMS 22... sensor

(91) IN ... sensor

(92) Thread below the cover for fastening external attachments

Hose-free direct connection M5

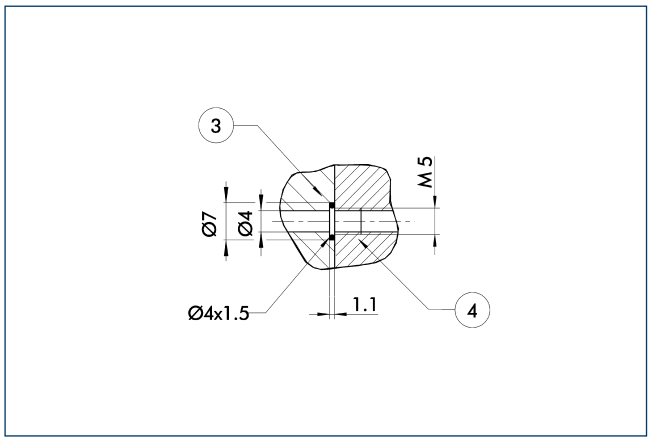

(3) Adapter (4) Gripper

The direct connection is used for supplying compressed air without hoses. Instead, the pressure medium is fed through bore-holes in the mounting plate.

Gripping force maintenance device AS / IS

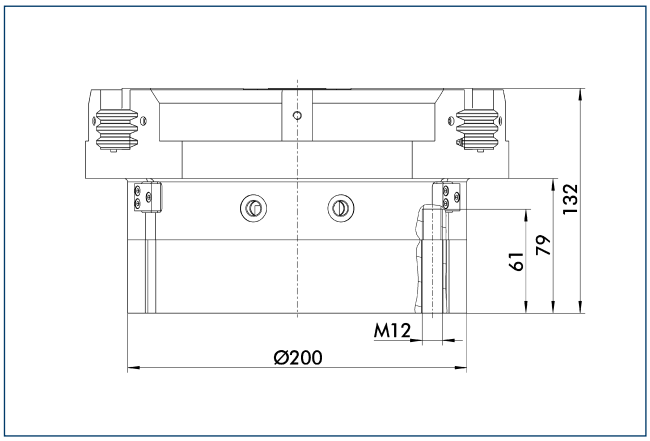

The mechanical maintenance of gripping force also assures a minimum gripping force in the case of a loss of pressure. With the AS / S variant, this acts as a closing force, and as an opening force for the IS variant. The maintenance of gripping force element can also be used as a means for increasing gripping force or for single actuated gripping.

Dust-tight version

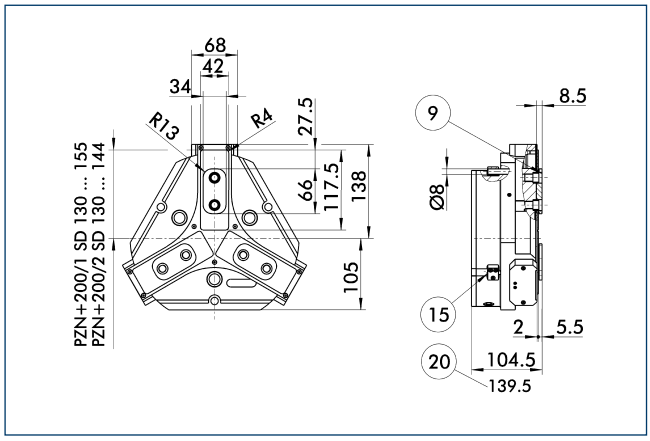

(9) For mounting screw connection diagram, see basic version
(15) Sealing bolt
(20) For AS / IS version

The "dust-protection" option increases the degree of protection against penetrating substances. The screw connection diagram shifts by the height of the intermediate jaw. The finger length is still measured from the upper edge of the gripper housing.

Precision version

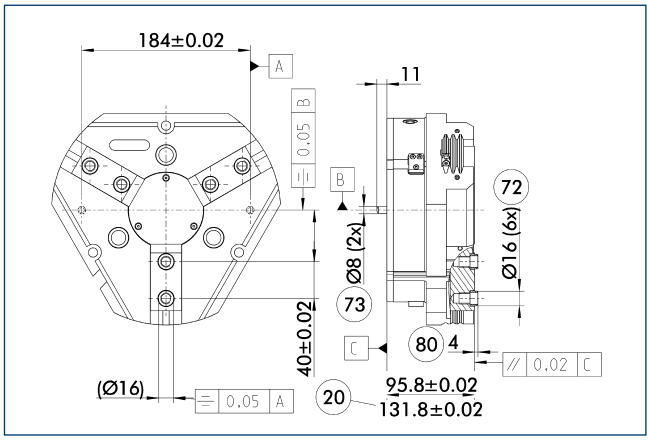

(20) For AS / IS version
(72) Fit for centering sleeves
(73) Fit for centering pins
(80) Depth of the centering sleeve hole in the mating part

The indicated tolerances just refer to the types of precision versions shown in the chart of technical specifications. All other types of precision versions are available on request.

Spring-loaded pressure piece

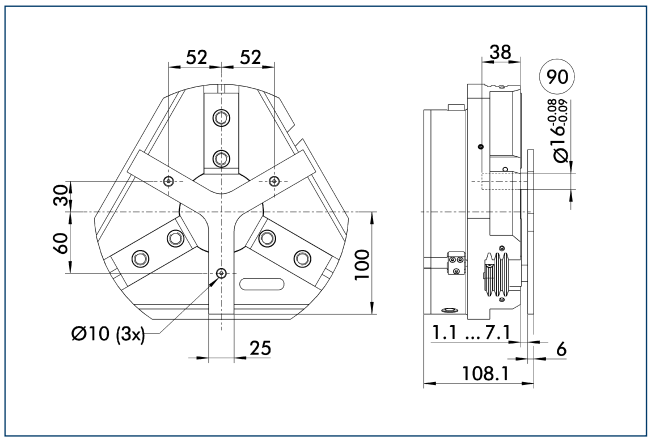

(90) Guide pin

For spring-supported positioning of the workpiece against a stop after the gripper has opened. Especially developed for loading machines.

Description	ID	Stroke [mm]	Min. force [N]
Spring-loaded pressure piece			
A-PZN-plus/DPZ-plus 200	0303725	6	247

ⓘ The pressure piece cannot be combined with the dust-tight option. Please ask for details about a special pressure piece.

SDV-P pressure maintenance valve

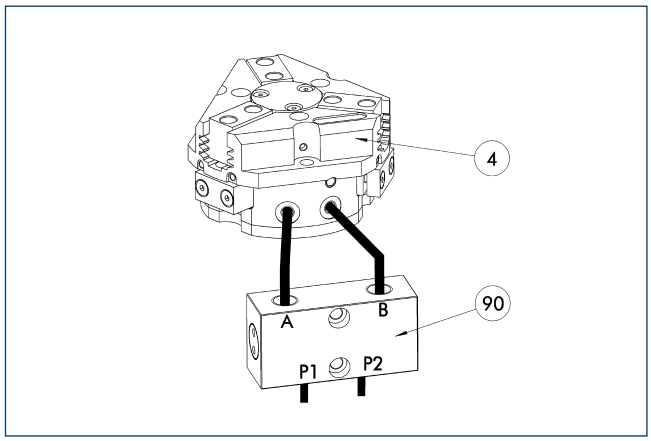

(4) Gripper
(90) SDV-P pressure maintenance valve

The SDV-P pressure maintenance valves ensure that the pressure in the piston chamber of pneumatic gripping, rotary, linear, and quick-change modules is maintained temporarily during an emergency stop.

Description	ID	
Pressure maintenance valve		
SDV-P 04	0403130	

ZBA L-plus 200 intermediate jaws

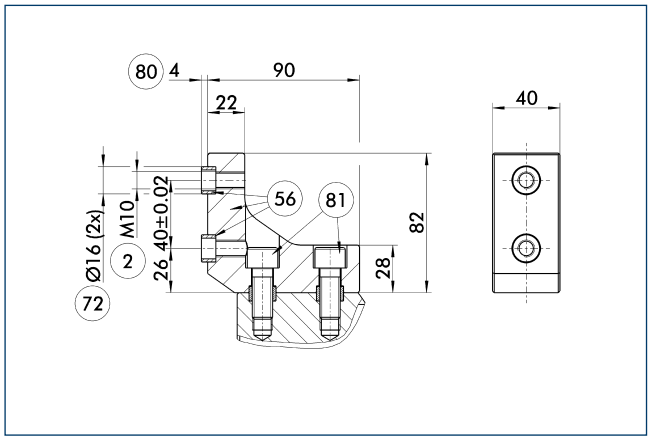

(2) Finger connection
(56) Included in delivery
(72) Fit for centering sleeves
(80) Depth of the centering sleeve hole in the mating part
(81) Not included in the scope of delivery

Optionally intermediate jaws can be used, enabling direct connection and alignment of top jaws and various standard accessories in Z-direction.

Description	ID	Material	Scope of delivery
Intermediate jaws			
ZBA-L-plus 200	0311772	Aluminum	1

UZB 200 universal intermediate jaw

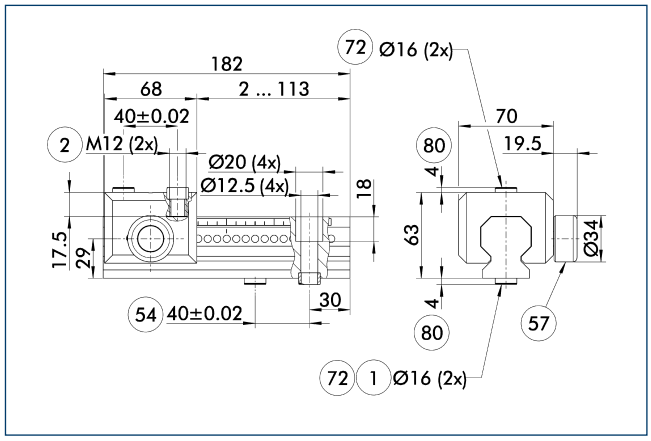

(1) Gripper connection
(2) Finger connection
(54) Optional right or left connection
(57) Locking
(72) Fit for centering sleeves
(80) Depth of the centering sleeve hole in the mating part

The universal intermediate jaw allows fast tool-free and reliable plugging and shifting of top jaws at the gripper.

Description	ID	Grid dimension [mm]
Universal intermediate jaw		
UZB 200	0300047	7
UZB-S 200	5518275	7
Finger blanks		
ABR-PGZN-plus 200	0300015	
SBR-PGZN-plus 200	0300025	

FMS-ZBA / ZBP 200 force-measuring jaws

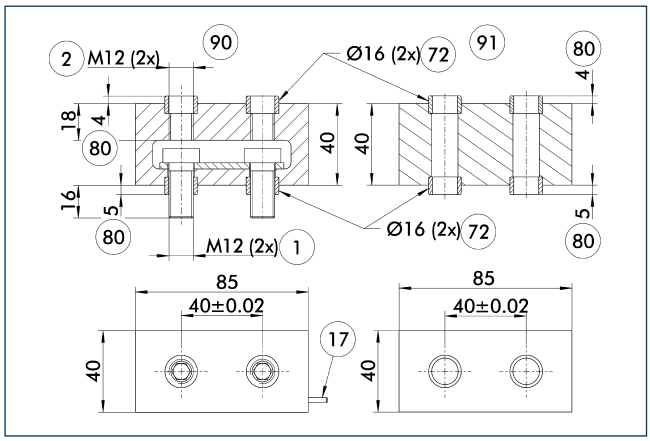

1 Gripper connection
2 Finger connection
17 Cable outlet
72 Fit for centering sleeves
80 Depth of the centering sleeve hole in the mating part
90 Active intermediate jaws
91 Passive intermediate jaws

Force measuring jaws measure gripping forces, but can also determine workpiece weights or dimensional deviations. There are active and passive intermediate jaws (FMS-ZBA or FMS-ZBP). At least one active force measuring jaw is required per gripper, the rest can be passive. For each active jaw, a FMS-A control unit and a FMS-AK connection cable are required.

Description	ID	Often combined
Active intermediate jaws		
FMS-ZBA 200	0301842	
Passive intermediate jaws		
FMS-ZBP 200	0301843	
Connection cables		
FMS-AK0200	0301820	●
FMS-AK0500	0301821	
FMS-AK1000	0301822	
FMS-AK2000	0301823	
Electronic processor		
FMS-A2	0301811	

ABR- / SBR-PGZN-plus 200 finger blanks

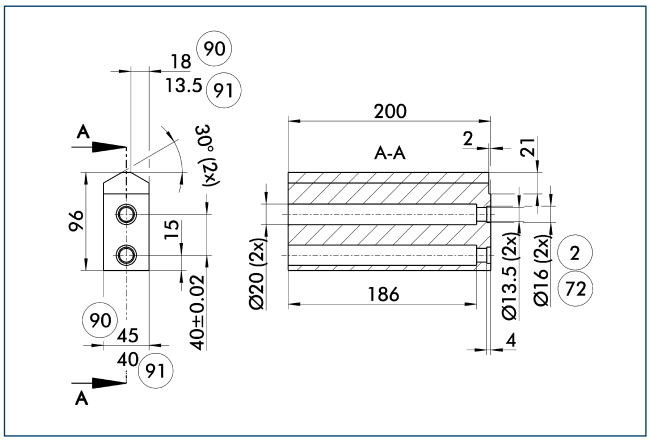

2 Finger connection
72 Fit for centering sleeves
90 ABR-PGZN-plus
91 SBR-PGZN-plus

Finger blanks for customized subsequent machining.

Description	ID	Material	Scope of delivery
Finger blanks			
ABR-PGZN-plus 200	0300015	Aluminum	1
SBR-PGZN-plus 200	0300025	16MnCr5	1

Inductive proximity switches

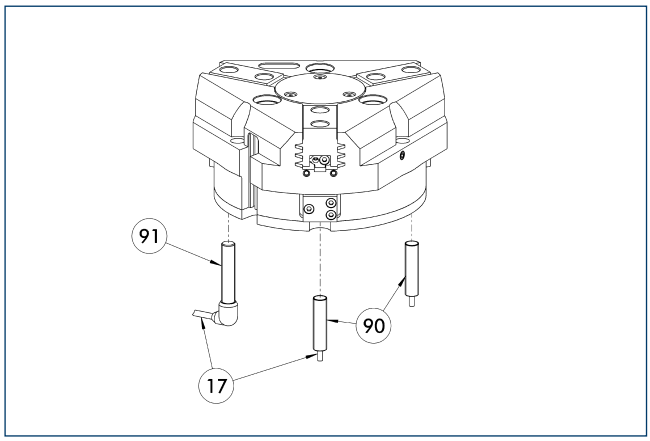

(17) Cable outlet
(91) IN ...-SA sensor
(90) IN ... sensor

Directly mounted limit position monitor.

Description	ID	Often combined
Inductive proximity switches		
IN 80-S-M12	0301578	
IN 80-S-M8	0301478	●
INK 80-S	0301550	
Inductive proximity switches with lateral outlet		
IN 80-S-M12-SA	0301587	
IN 80-S-M8-SA	0301483	●
INK 80-S-SA	0301566	
Cable extensions		
KV BG12-SG12 3P-0030-PNP	0301999	
KV BG12-SG12 3P-0060-PNP	0301998	
KV BW08-SG08 3P-0030-PNP	0301495	
KV BW08-SG08 3P-0100-PNP	0301496	
KV BW08-SG08 3P-0200-PNP	0301497	●
KV BW12-SG12 3P-0030-PNP	0301595	
KV BW12-SG12 3P-0100-PNP	0301596	
KV BW12-SG12 3P-0200-PNP	0301597	
Clip for plug / socket		
CLI-M12	0301464	
CLI-M8	0301463	
Connection cables		
KA BG08-L 3P-0300-PNP	0301622	●
KA BG08-L 3P-0500-PNP	0301623	
KA BG12-L 3P-0500-PNP	30016369	
KA BW08-L 3P-0300-PNP	0301594	
KA BW08-L 3P-0500-PNP	0301502	
KA BW12-L 3P-0300-PNP	0301503	
KA BW12-L 3P-0500-PNP	0301507	
Sensor distributor		
V2-M8	0301775	●
V2-M12	0301776	●
V4-M12	0301747	
V4-M8	0301746	

ⓘ Two sensors (closer/S) are required for each unit, plus extension cables as an option. Please note the minimum permitted bending radii for the sensor cables, which are generally 35 mm.

Flexible position sensor

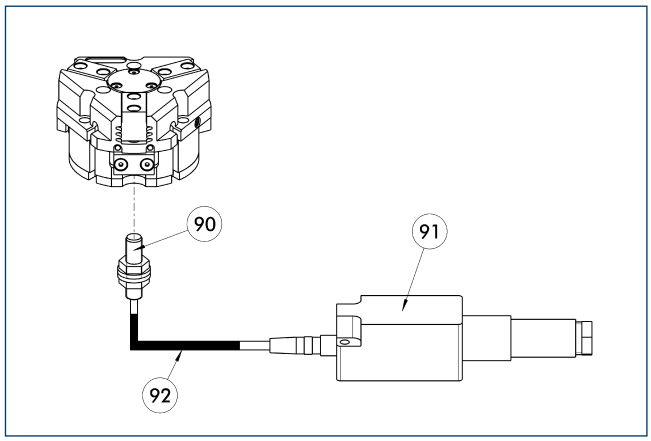

(90) FPS-S sensor
(91) FPS-F5 / -F5 T electronic processor
(92) Cable extensions

Flexible position monitoring of up to five positions.

Description	ID	Often combined
Mounting kit for FPS		
AS-FPS-PGZN-plus 200-1	0301640	
AS-FPS-PGZN-plus 200-2	0301641	
Electronic processor		
FPS-F5	0301805	●
FPS-F5 T	0301807	
Sensor		
FPS-S M8	0301704	
Clip for plug / socket		
CLI-M8	0301463	

ⓘ When using a FPS system, a FPS sensor (FPS-S) and a control unit (FPS-F5 / F5 T) are required for each gripper as well as a mounting kit (AS), if listed. Cable extensions (KV) are available as options in the "Accessories" catalog section.

MMS electronic magnetic switches

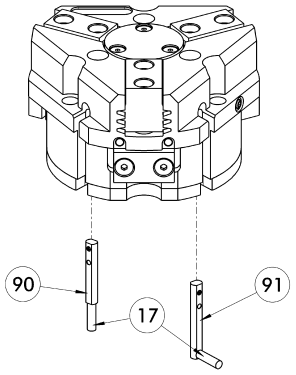

17 Cable outlet
91 MMS 22...-SA sensor
90 MMS 22... sensor

End position monitoring for mounting in the C-slot.

Description	ID	Often combined
MMS electronic magnetic switches		
MMS 22-S-M8-PNP	0301032	●
MMSK 22-S-PNP	0301034	
MMS electronic magnetic switches with lateral cable outlet		
MMS 22-S-M8-PNP-SA	0301042	●
MMSK 22-S-PNP-SA	0301044	
Reed switches		
RMS 22-S-M8	0377720	●
Cable extensions		
KV BW08-SG08 3P-0030-PNP	0301495	
KV BW08-SG08 3P-0100-PNP	0301496	
KV BW08-SG08 3P-0200-PNP	0301497	●
Clip for plug / socket		
CLI-M8	0301463	
Connection cables		
KA BG08-L 3P-0300-PNP	0301622	●
KA BG08-L 3P-0500-PNP	0301623	
KA BW08-L 3P-0300-PNP	0301594	
KA BW08-L 3P-0500-PNP	0301502	
RSS radio sensor system		
RSS-T2	0377710	
Sensor distributor		
V2-M8	0301775	●
V4-M8	0301746	
V8-M8	0301751	

ⓘ Two sensors (closer/S) are required for each unit, plus extension cables as an option. Please note the minimum permitted bending radii for the sensor cables, which are generally 35 mm.

MMS PI1 programmable magnetic switches

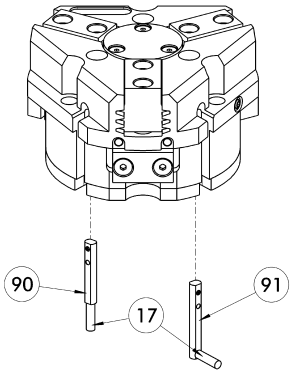

17 Cable outlet
91 MMS 22...-PI1-...-SA sensor
90 MMS 22...-PI1-... sensor

Position query with one programmable position per sensor and electronics integrated in sensor. Programmable via MT magnet teaching tool (included in the scope of delivery) or ST plug teaching tool (optional). Limit position query mounted in C-groove. If the ST plug teaching tools are listed in the table, teaching can only take place with the ST plug teaching tools.

Description	ID	Often combined
Plug teaching tool		
ST-MMS 22-PI1-PNP	0301025	
MMS PI1 programmable magnetic switches		
MMS 22-PI1-S-M8-PNP	0301160	●
MMSK 22-PI1-S-PNP	0301162	
MMS PI1-HD programmable magnetic switches with stainless steel housing		
MMS 22-PI1-S-M8-PNP-HD	0301110	●
MMSK 22-PI1-S-PNP-HD	0301112	
MMS PI1 programmable magnetic switches with lateral cable outlet		
MMS 22-PI1-S-M8-PNP-SA	0301166	●
MMSK 22-PI1-S-PNP-SA	0301168	

ⓘ Two sensors (closer/S) are required for each unit, plus extension cables as an option. Please note the minimum permitted bending radii for the sensor cables, which are generally 35 mm. Connection cable, cable extensions, and sensor distributors can be found in the table for the MMS 22.

MMS-P programmable magnetic switches

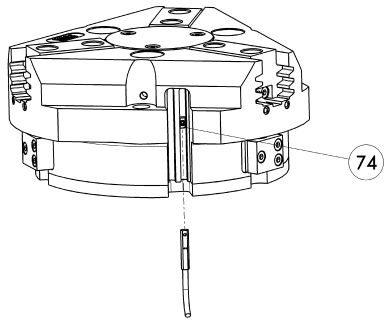

74 Stop for MMS-P

Position monitoring with two programmable positions per sensor. The end position monitoring is mounted in the C-slot.

Description	ID	Often combined
MMS-P programmable magnetic switches		
MMSK-P 22-S-PNP	0301371	
MMS-P 22-S-M8-PNP	0301370	●
Clip for plug / socket		
CLI-M8	0301463	
Connection cables		
KA BG08-L 4P-0500	0307767	●
KA BG08-L 4P-1000	0307768	
KA BW08-L 4P-0500	0307765	
KA BW08-L 4P-1000	0307766	
Sensor distributor		
V2-M8-4P-2XM8-3P	0301380	

ⓘ Per unit one sensor (closer/S) is required, optionally a cable extension. Please note the minimum permitted bending radii for the sensor cables, which are generally 35 mm.

APS-Z80 analog position sensor

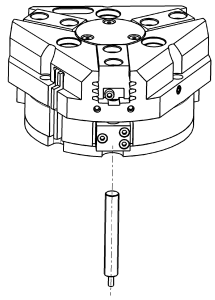

Contactlessly measuring, analog multi-position monitoring for any number of positions.

Description	ID	Often combined
Mounting kit for APS-Z80		
AS-APS-Z80-PGZN-plus 160-1/200-2/240-2	0302113	
AS-APS-Z80-PGZN-plus 200-1	0302115	
Sensor		
APS-Z80-K	0302072	
APS-Z80-M8	0302070	●

ⓘ When using an APS system, one mounting kit (AS-APS-Z80) and one APS-Z80 sensor is required per gripper.

APS-M1 analog position sensor

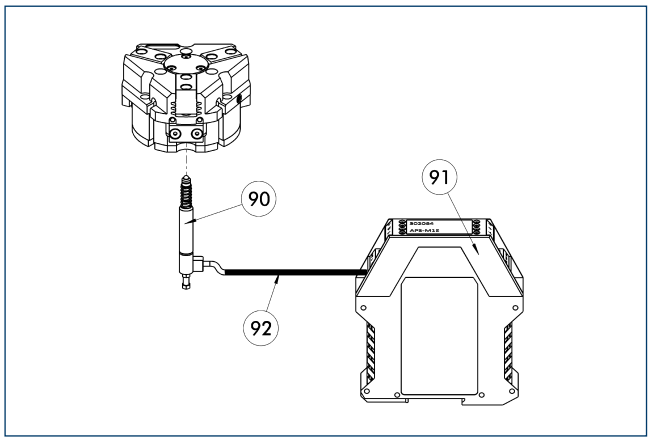

90 APS-M1S sensor
91 APS-M1E electronic processor
92 APS-K extension cable

Analog multi position monitoring for any desired positions.

Description	ID	Often combined
Mounting kit for APS-M1		
AS-APS-M1-PGZN-plus 200-1/380-2	0302085	
AS-APS-M1-PGZN-plus 200-2	0302086	
Connection cables		
APS-K0200	0302066	●
APS-K0700	0302068	
Electronic processor		
APS-M1E	0302064	
Sensor		
APS-M1S	0302062	

ⓘ When using an APS system, for each gripper a mounting kit (AS-APS-M1), an APS-M1S sensor (incl. 3 m cable) as well as an electronics (APS-M1e) are required. An extension cable (APS-K) can be connected between the sensor and the electronics as an option. The max. cable length between the sensor and the electronics is 10 m, between the electronics and their control unit (PLC) it is max. 1 m.

Cylindrical reed switches

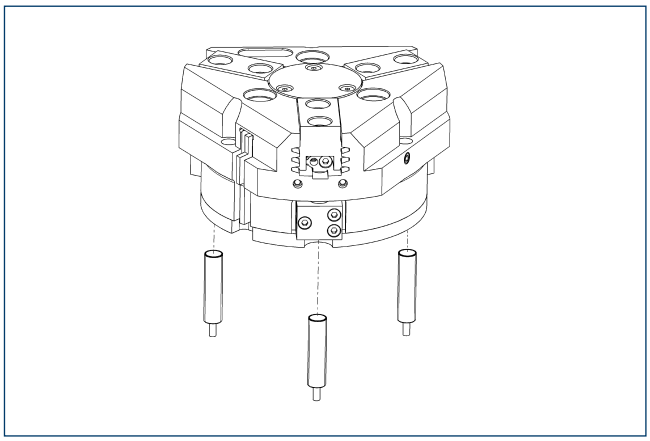

Limit position monitor can be mounted with mounting kit.

Description	ID	
Mounting kit for proximity switch		
AS-RMS 80 PGN/PZN-plus 160-380	0377727	
Reed switches		
RMS 80-S-M8	0377721	

ⓘ Two sensors (closer/S) are required for each unit, plus extension cables as an option. This mounting kit needs to be ordered optionally as an accessory. Two mounting kits are required per gripper. Please note the minimum permitted bending radii for the sensor cables, which are generally 35 mm.

PZN-plus 240

SCHUNK Grippers pneumatic | 3-Finger Centric Grippers | Universal Gripper

Gripping force, O.D. gripping

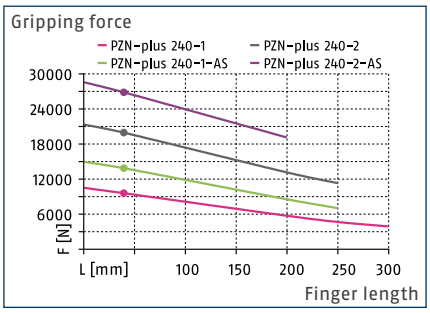

Gripping force, I.D. gripping

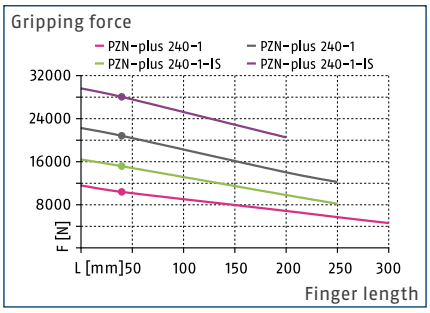

Finger load

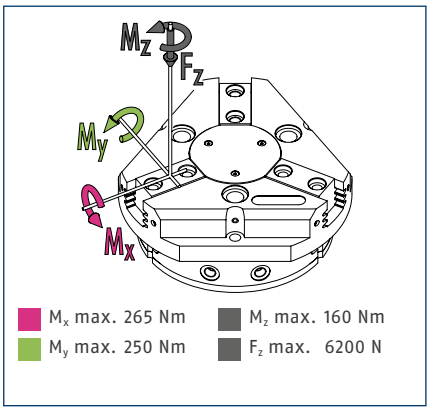

ⓘ The indicated moments and forces are static values, apply per base jaw and may occur simultaneously. M_y may arise in addition to the moment generated by the gripping force itself. If the max. permitted finger weight is exceeded, it is impreative to throttle the air supply so that the jaw movement occurs without any hitting or bouncing. Service life may be reduced.

Technical data

Description		PZN-plus 240-1	PZN-plus 240-2	PZN-plus 240-1-AS	PZN-plus 240-2-AS	PZN-plus 240-1-IS	PZN-plus 240-2-IS
ID		0303316	0303416	0303516	0303616	0303546	0303646
Stroke per jaw	[mm]	30	17	30	17	30	17
Closing- / opening force	[N]	9500/10400	19700/20800	13720/-	26500/-	-/15170	-/28000
min. spring force	[N]			4220	6800	4770	7200
Weight	[kg]	20	20	24	24	24	24
Recommended workpiece weight	[kg]	50	100.5	50	100.5	50	100.5
Fluid consumption per double stroke	[cm³]	1780	1780	3090	3090	3090	3090
min. / max. operating pressure	[bar]	2/8	2/8	4/6.5	4/6.5	4/6.5	4/6.5
Nominal operating pressure	[bar]	6	6	6	6	6	6
Closing- / opening time	[s]	1.25/1.25	1.25/1.25	1.1/2.1	1.1/2.1	1.7/1.1	1.7/1.1
Closing- / opening time only with spring	[s]			2.00	2.00	2.00	2.00
max. permitted finger length	[mm]	300	250	250	200	250	200
max. permitted weight per finger	[kg]	8.5	8.5	8.5	8.5	8.5	8.5
IP class		40	40	40	40	40	40
min. / max. ambient temperature	[°C]	5/90	5/90	5/90	5/90	5/90	5/90
Repeat accuracy	[mm]	0.05	0.05	0.05	0.05	0.05	0.05
Cleanroom class ISO 14644-1		5	5	5	5	5	5
Options and their characteristics							
Dust-tight version		37303316	37303416	37303516	37303616	37303546	37303646
IP class		64	64	64	64	64	64
Weight	[kg]	21.5	21.5	25.5	25.5	25.5	25.5
Anti-corrosion version		38303316	38303416	38303516	38303616	38303546	38303646
High-temperature version		39303316	39303416	39303516	39303616	39303546	39303646
min. / max. ambient temperature	[°C]	5/130	5/130	5/130	5/130	5/130	5/130
Precision version		0303346	0303446	0303496	0303596		

ⓘ The full gripping force according to the data table is only realised after around 100 gripping cycles.

Main view

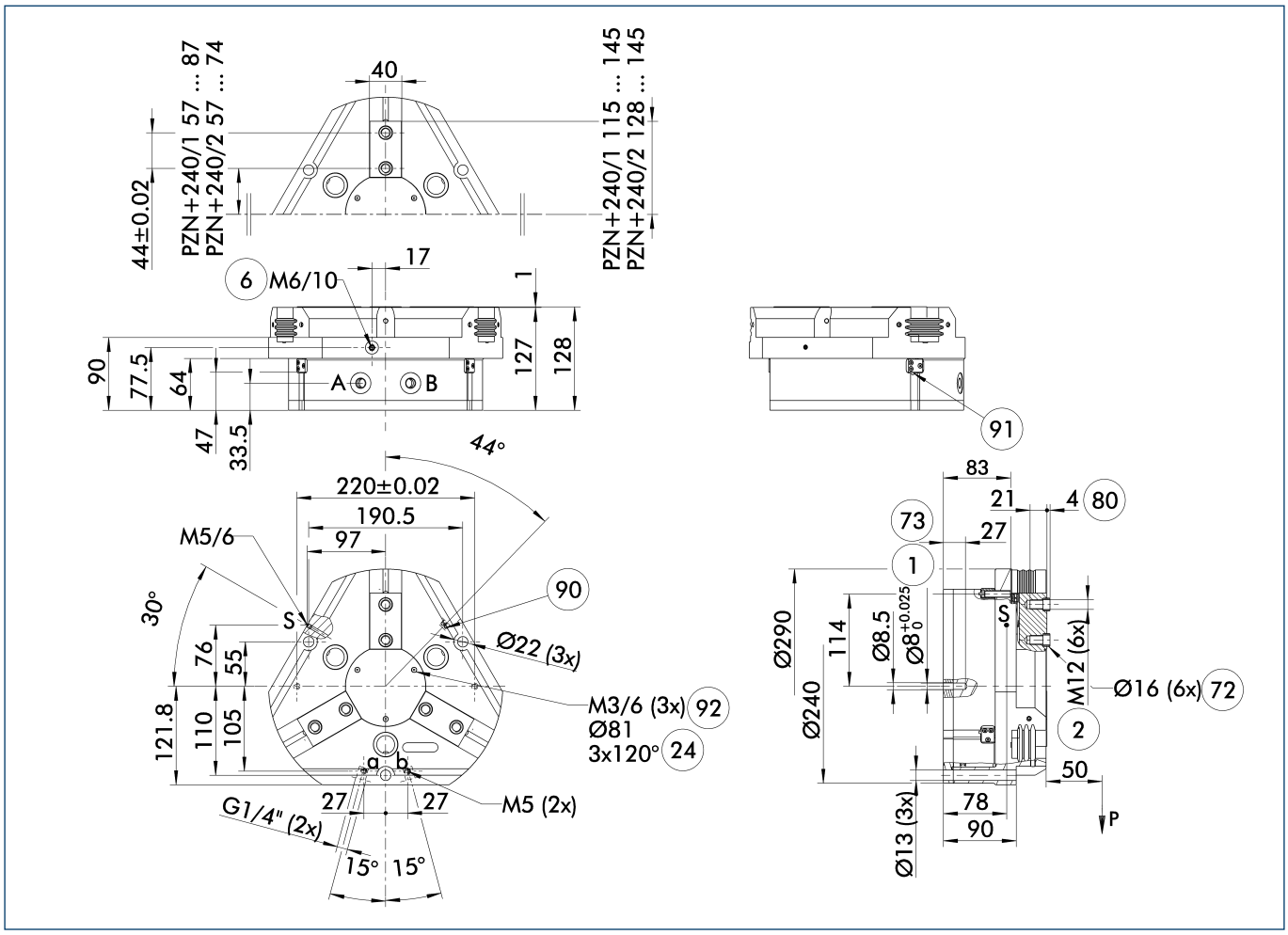

The drawing shows the gripper in the basic version with closed jaws, without dimensional consideration of the options described below.

ⓘ The SDV-P pressure maintenance valve can also be used for I.D. or O.D. gripping alternatively or in addition to the spring-loaded, mechanical gripping force maintenance device (see catalog section on "Accessories").

A, a Main / direct connection, gripper opening

B, b Main / direct connection, gripper closing

S Air purge connection (0.5 ... 1 bar)

(1) Gripper connection

(2) Finger connection

(6) Lubricating nipple connection

(24) Bolt circle

(72) Fit for centering sleeves

(73) Fit for centering pins

(80) Depth of the centering sleeve hole in the mating part

(90) MMS 22... sensor

(91) IN ... sensor

(92) Thread below the cover for fastening external attachments

Hose-free direct connection M5

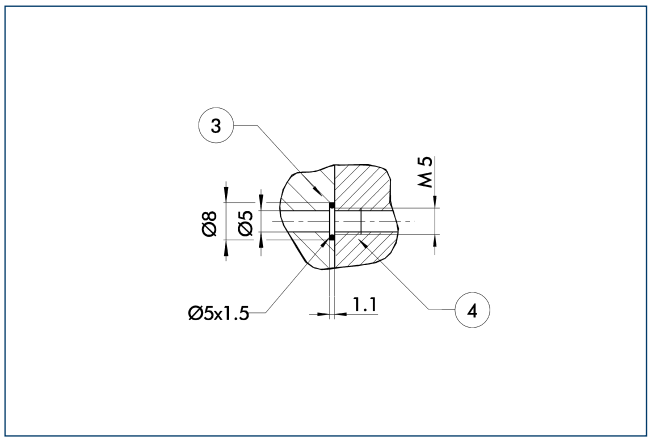

(3) Adapter (4) Gripper

The direct connection is used for supplying compressed air without hoses. Instead, the pressure medium is fed through bore-holes in the mounting plate.

Gripping force maintenance device AS / IS

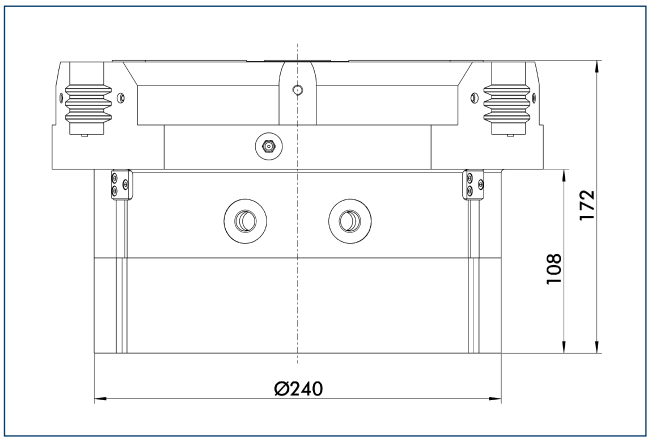

The mechanical maintenance of gripping force also assures a minimum gripping force in the case of a loss of pressure. With the AS / S variant, this acts as a closing force, and as an opening force for the IS variant. The maintenance of gripping force element can also be used as a means for increasing gripping force or for single actuated gripping.

Dust-tight version

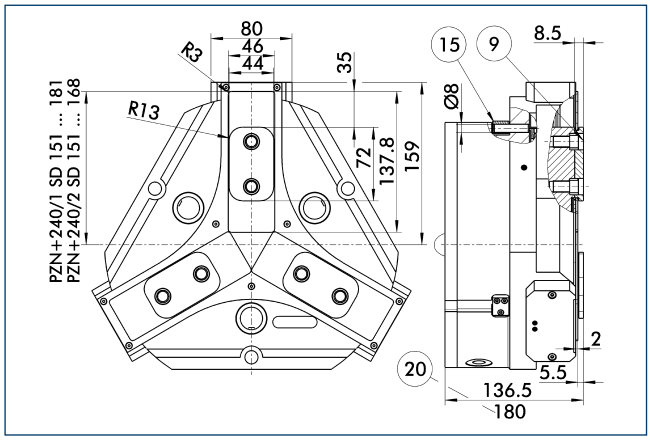

(9) For mounting screw connection diagram, see basic version
(15) Sealing bolt
(20) For AS / IS version

The "dust-protection" option increases the degree of protection against penetrating substances. The screw connection diagram shifts by the height of the intermediate jaw. The finger length is still measured from the upper edge of the gripper housing.

Precision version

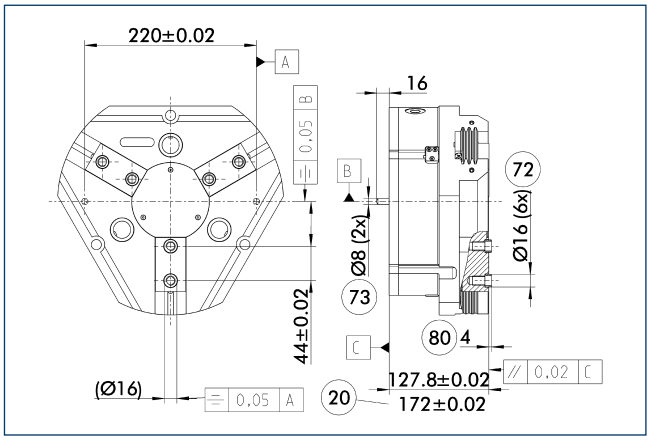

(20) For AS / IS version
(72) Fit for centering sleeves
(73) Fit for centering pins
(80) Depth of the centering sleeve hole in the mating part

The indicated tolerances just refer to the types of precision versions shown in the chart of technical specifications. All other types of precision versions are available on request.

Spring-loaded pressure piece

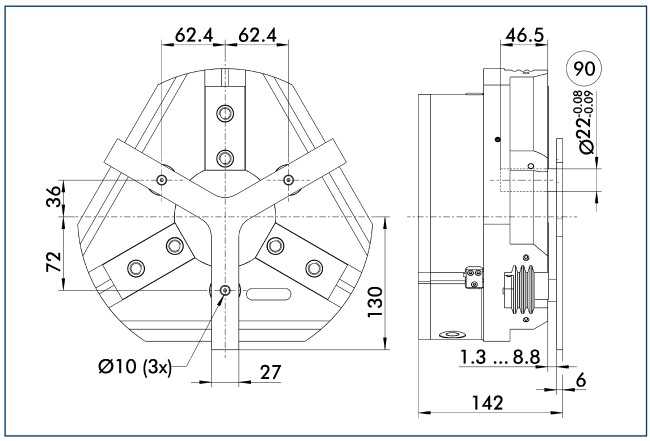

(90) Guide pin

For spring-supported positioning of the workpiece against a stop after the gripper has opened. Especially developed for loading machines.

Description	ID	Stroke [mm]	Min. force [N]
Spring-loaded pressure piece			
A-PZN-plus/DPZ-plus 240	0303726	7.5	240

ⓘ The pressure piece cannot be combined with the dust-tight option. Please ask for details about a special pressure piece.

SDV-P pressure maintenance valve

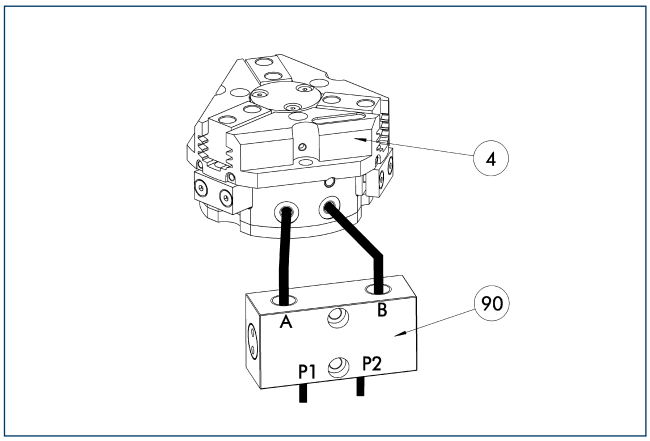

(4) Gripper
(90) SDV-P pressure maintenance valve

The SDV-P pressure maintenance valves ensure that the pressure in the piston chamber of pneumatic gripping, rotary, linear, and quick-change modules is maintained temporarily during an emergency stop.

Description	ID	
Pressure maintenance valve		
SDV-P 07	0403131	

ZBA L-plus 240 intermediate jaws

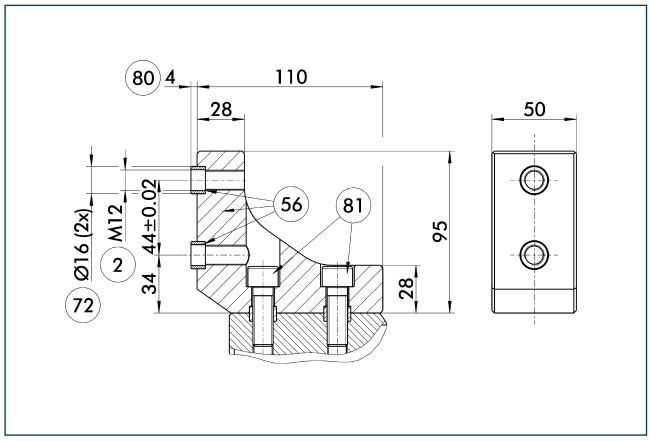

(2) Finger connection
(56) Included in delivery
(72) Fit for centering sleeves
(80) Depth of the centering sleeve hole in the mating part
(81) Not included in the scope of delivery

Optionally intermediate jaws can be used, enabling direct connection and alignment of top jaws and various standard accessories in Z-direction.

Description	ID	Material	Scope of delivery
Intermediate jaws			
ZBA-L-plus 240	0311782	Aluminum	1

ABR- / SBR-PGZN-plus 240 finger blanks

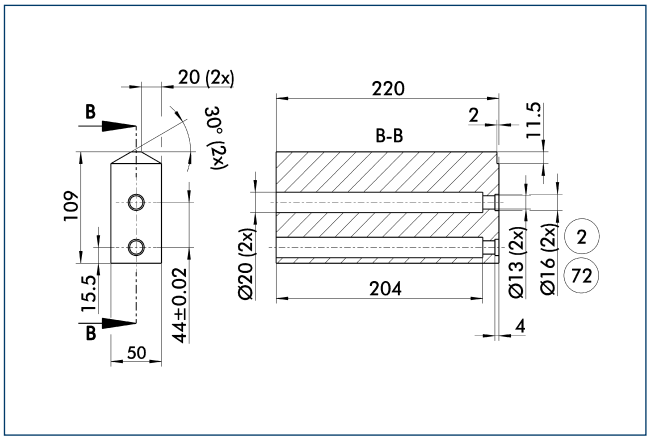

(2) Finger connection
(72) Fit for centering sleeves

Finger blanks for customized subsequent machining.

Description	ID	Material	Scope of delivery
Finger blanks			
ABR-PGZN-plus 240	0300017	Aluminum	1
SBR-PGZN-plus 240	0300027	16MnCr5	1

Inductive proximity switches

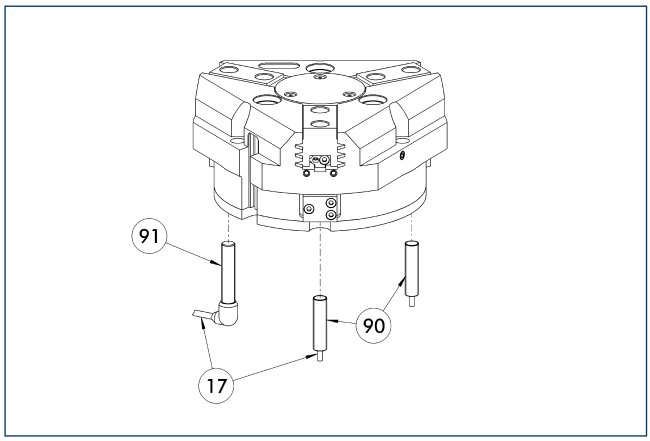

(17) Cable outlet
(91) IN ...-SA sensor
(90) IN ... sensor

Directly mounted limit position monitor.

Description	ID	Often combined
Inductive proximity switches		
IN 80-S-M12	0301578	
IN 80-S-M8	0301478	●
INK 80-S	0301550	
Inductive proximity switches with lateral outlet		
IN 80-S-M12-SA	0301587	
IN 80-S-M8-SA	0301483	●
INK 80-S-SA	0301566	
Cable extensions		
KV BG12-SG12 3P-0030-PNP	0301999	
KV BG12-SG12 3P-0060-PNP	0301998	
KV BW08-SG08 3P-0030-PNP	0301495	
KV BW08-SG08 3P-0100-PNP	0301496	
KV BW08-SG08 3P-0200-PNP	0301497	●
KV BW12-SG12 3P-0030-PNP	0301595	
KV BW12-SG12 3P-0100-PNP	0301596	
KV BW12-SG12 3P-0200-PNP	0301597	
Clip for plug / socket		
CLI-M12	0301464	
CLI-M8	0301463	
Connection cables		
KA BG08-L 3P-0300-PNP	0301622	●
KA BG08-L 3P-0500-PNP	0301623	
KA BG12-L 3P-0500-PNP	30016369	
KA BW08-L 3P-0300-PNP	0301594	
KA BW08-L 3P-0500-PNP	0301502	
KA BW12-L 3P-0300-PNP	0301503	
KA BW12-L 3P-0500-PNP	0301507	
Sensor distributor		
V2-M8	0301775	●
V2-M12	0301776	●
V4-M12	0301747	
V4-M8	0301746	

ⓘ Two sensors (closer/S) are required for each unit, plus extension cables as an option. Please note the minimum permitted bending radii for the sensor cables, which are generally 35 mm.

Flexible position sensor

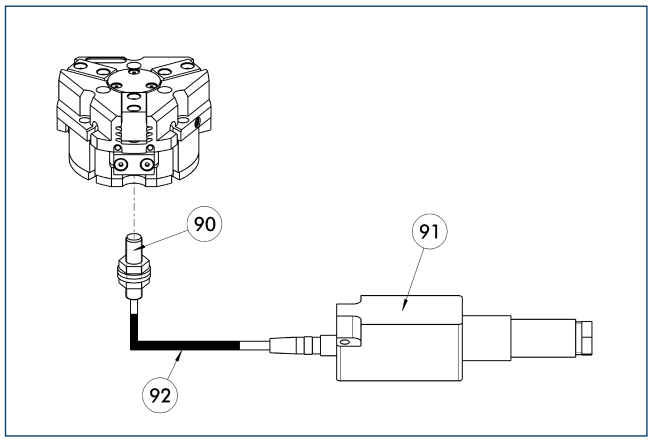

(90) FPS-S sensor
(91) FPS-F5 / -F5 T electronic processor
(92) Cable extensions

Flexible position monitoring of up to five positions.

Description	ID	Often combined
Mounting kit for FPS		
AS-FPS-PGZN-plus 240-1	0301643	
AS-FPS-PGZN-plus 240-2	0301644	
Electronic processor		
FPS-F5	0301805	●
FPS-F5 T	0301807	
Sensor		
FPS-S M8	0301704	
Clip for plug / socket		
CLI-M8	0301463	

ⓘ When using a FPS system, a FPS sensor (FPS-S) and a control unit (FPS-F5 / F5 T) are required for each gripper as well as a mounting kit (AS), if listed. Cable extensions (KV) are available as options in the "Accessories" catalog section.

MMS electronic magnetic switches

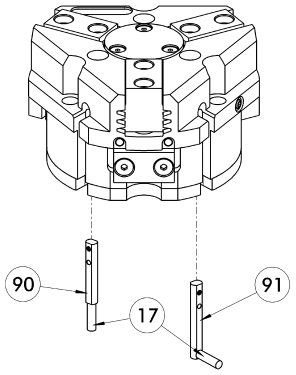

17 Cable outlet
91 MMS 22...-SA sensor
90 MMS 22... sensor

End position monitoring for mounting in the C-slot.

Description	ID	Often combined
MMS electronic magnetic switches		
MMS 22-S-M8-PNP	0301032	●
MMSK 22-S-PNP	0301034	
MMS electronic magnetic switches with lateral cable outlet		
MMS 22-S-M8-PNP-SA	0301042	●
MMSK 22-S-PNP-SA	0301044	
Reed switches		
RMS 22-S-M8	0377720	●
Cable extensions		
KV BW08-SG08 3P-0030-PNP	0301495	
KV BW08-SG08 3P-0100-PNP	0301496	
KV BW08-SG08 3P-0200-PNP	0301497	●
Clip for plug / socket		
CLI-M8	0301463	
Connection cables		
KA BG08-L 3P-0300-PNP	0301622	●
KA BG08-L 3P-0500-PNP	0301623	
KA BW08-L 3P-0300-PNP	0301594	
KA BW08-L 3P-0500-PNP	0301502	
RSS radio sensor system		
RSS-T2	0377710	
Sensor distributor		
V2-M8	0301775	●
V4-M8	0301746	
V8-M8	0301751	

ⓘ Two sensors (closer/S) are required for each unit, plus extension cables as an option. Please note the minimum permitted bending radii for the sensor cables, which are generally 35 mm.

MMS PI1 programmable magnetic switches

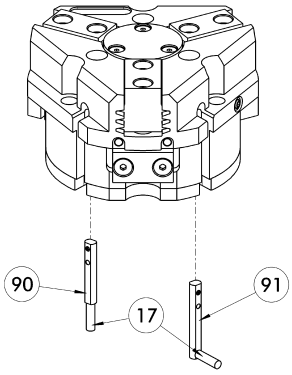

17 Cable outlet
91 MMS 22...-PI1-...-SA sensor
90 MMS 22...-PI1-... sensor

Position query with one programmable position per sensor and electronics integrated in sensor. Programmable via MT magnet teaching tool (included in the scope of delivery) or ST plug teaching tool (optional). Limit position query mounted in C-groove. If the ST plug teaching tools are listed in the table, teaching can only take place with the ST plug teaching tools.

Description	ID	Often combined
Plug teaching tool		
ST-MMS 22-PI1-PNP	0301025	
MMS PI1 programmable magnetic switches		
MMS 22-PI1-S-M8-PNP	0301160	●
MMSK 22-PI1-S-PNP	0301162	
MMS PI1-HD programmable magnetic switches with stainless steel housing		
MMS 22-PI1-S-M8-PNP-HD	0301110	●
MMSK 22-PI1-S-PNP-HD	0301112	
MMS PI1 programmable magnetic switches with lateral cable outlet		
MMS 22-PI1-S-M8-PNP-SA	0301166	●
MMSK 22-PI1-S-PNP-SA	0301168	

ⓘ Two sensors (closer/S) are required for each unit, plus extension cables as an option. Please note the minimum permitted bending radii for the sensor cables, which are generally 35 mm. Connection cable, cable extensions, and sensor distributors can be found in the table for the MMS 22.

APS-Z80 analog position sensor

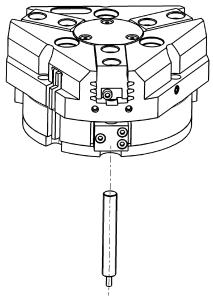

Contactlessly measuring, analog multi-position monitoring for any number of positions.

Description	ID	Often combined
Mounting kit for APS-Z80		
AS-APS-Z80-PGZN-plus 160-1/200-2/240-2	0302113	
AS-APS-Z80-PGZN-plus 240-1	0302116	
Sensor		
APS-Z80-K	0302072	
APS-Z80-M8	0302070	●

ⓘ When using an APS system, one mounting kit (AS-APS-Z80) and one APS-Z80 sensor is required per gripper.

APS-M1 analog position sensor

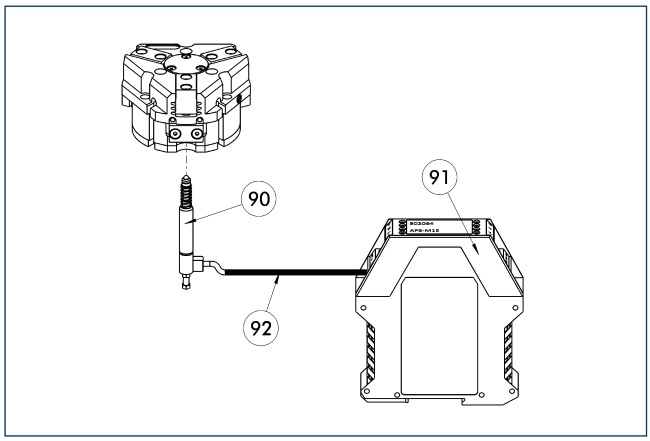

(90) APS-M1S sensor
(91) APS-M1E electronic processor
(92) APS-K extension cable

Analog multi position monitoring for any desired positions.

Description	ID	Often combined
Mounting kit for APS-M1		
AS-APS-M1-PGZN-plus 160-1/240-2	0302083	
AS-APS-M1-PGZN-plus 240-1	0302087	
Connection cables		
APS-K0200	0302066	●
APS-K0700	0302068	
Electronic processor		
APS-M1E	0302064	
Sensor		
APS-M1S	0302062	

ⓘ When using an APS system, for each gripper a mounting kit (AS-APS-M1), an APS-M1S sensor (incl. 3 m cable) as well as an electronics (APS-M1e) are required. An extension cable (APS-K) can be connected between the sensor and the electronics as an option. The max. cable length between the sensor and the electronics is 10 m, between the electronics and their control unit (PLC) it is max. 1 m.

Cylindrical reed switches

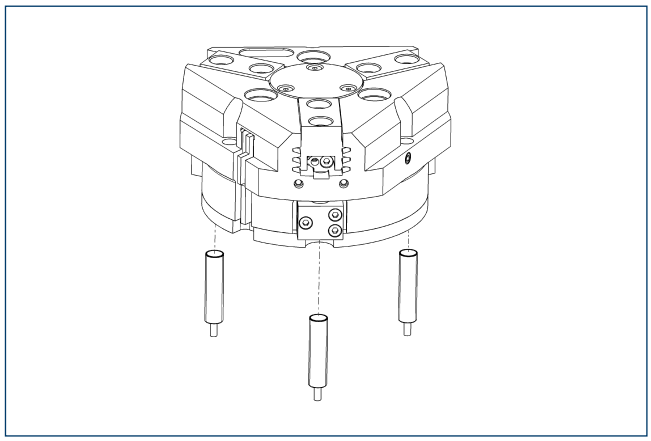

Limit position monitor can be mounted with mounting kit.

Description	ID	
Mounting kit for proximity switch		
AS-RMS 80 PGN/PZN-plus 160-380	0377727	
Reed switches		
RMS 80-S-M8	0377721	

ⓘ Two sensors (closer/S) are required for each unit, plus extension cables as an option. This mounting kit needs to be ordered optionally as an accessory. Two mounting kits are required per gripper. Please note the minimum permitted bending radii for the sensor cables, which are generally 35 mm.

PZN-plus 300

SCHUNK Grippers pneumatic | 3-Finger Centric Grippers | Universal Gripper

Gripping force, O.D. gripping

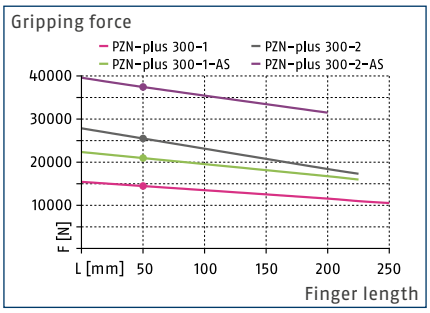

Gripping force, I.D. gripping

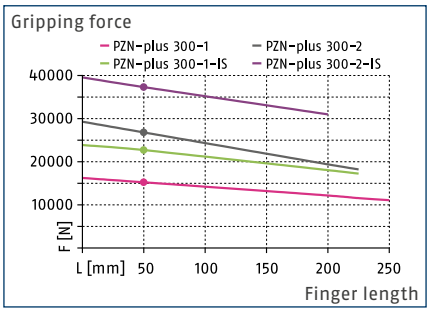

Finger load

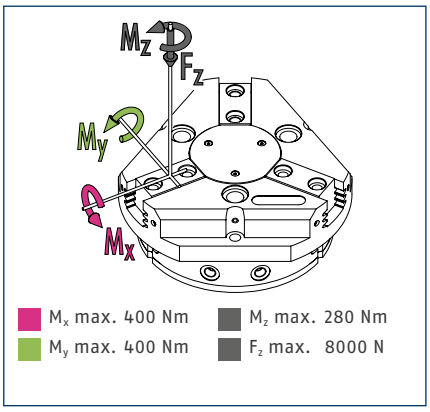

ⓘ The indicated moments and forces are static values, apply per base jaw and may occur simultaneously. M_y may arise in addition to the moment generated by the gripping force itself. If the max. permitted finger weight is exceeded, it is impreative to throttle the air supply so that the jaw movement occurs without any hitting or bouncing. Service life may be reduced.

Technical data

Description		PZN-plus 300-1	PZN-plus 300-2	PZN-plus 300-1-AS	PZN-plus 300-2-AS	PZN-plus 300-1-IS	PZN-plus 300-2-IS
ID		0303317	0303417	0303517	0303617	0303547	0303647
Stroke per jaw	[mm]	35	20	35	20	35	20
Closing- / opening force	[N]	14500/15200	25500/26800	21000/-	35500/-	-/22700	-/37300
min. spring force	[N]			6500	10000	7500	10500
Weight	[kg]	33	33	43.5	43.5	43.5	43.5
Recommended workpiece weight	[kg]	72.5	127.5	72.5	127.5	72.5	127.5
Fluid consumption per double stroke	[cm³]	2850	2850	5050	5050	5050	5050
min. / max. operating pressure	[bar]	2/8	2/8	4/6.5	4/6.5	4/6.5	4/6.5
Nominal operating pressure	[bar]	6	6	6	6	6	6
Closing- / opening time	[s]	1.3/1.3	1.3/1.3	1.2/2.5	1.2/2.5	2/1.2	2/1.2
Closing- / opening time only with spring	[s]			2.50	2.50	2.00	2.00
max. permitted finger length	[mm]	250	225	225	200	225	200
max. permitted weight per finger	[kg]	11.5	11.5	11.5	11.5	11.5	11.5
IP class		40	40	40	40	40	40
min. / max. ambient temperature	[°C]	5/90	5/90	5/90	5/90	5/90	5/90
Repeat accuracy	[mm]	0.05	0.05	0.05	0.05	0.05	0.05
Cleanroom class ISO 14644-1		5	5	5	5	5	5
Options and their characteristics							
Dust-tight version		37303317	37303417	37303517	37303617	37303547	37303647
IP class		64	64	64	64	64	64
Weight	[kg]	35.5	35.5	46	46	46	46
Anti-corrosion version		38303317	38303417	38303517	38303617	38303547	38303647
High-temperature version		39303317	39303417	39303517	39303617	39303547	39303647
min. / max. ambient temperature	[°C]	5/130	5/130	5/130	5/130	5/130	5/130
Precision version		0303347	0303447	0303497	0303597		

ⓘ The full gripping force according to the data table is only realised after around 100 gripping cycles.

Main view

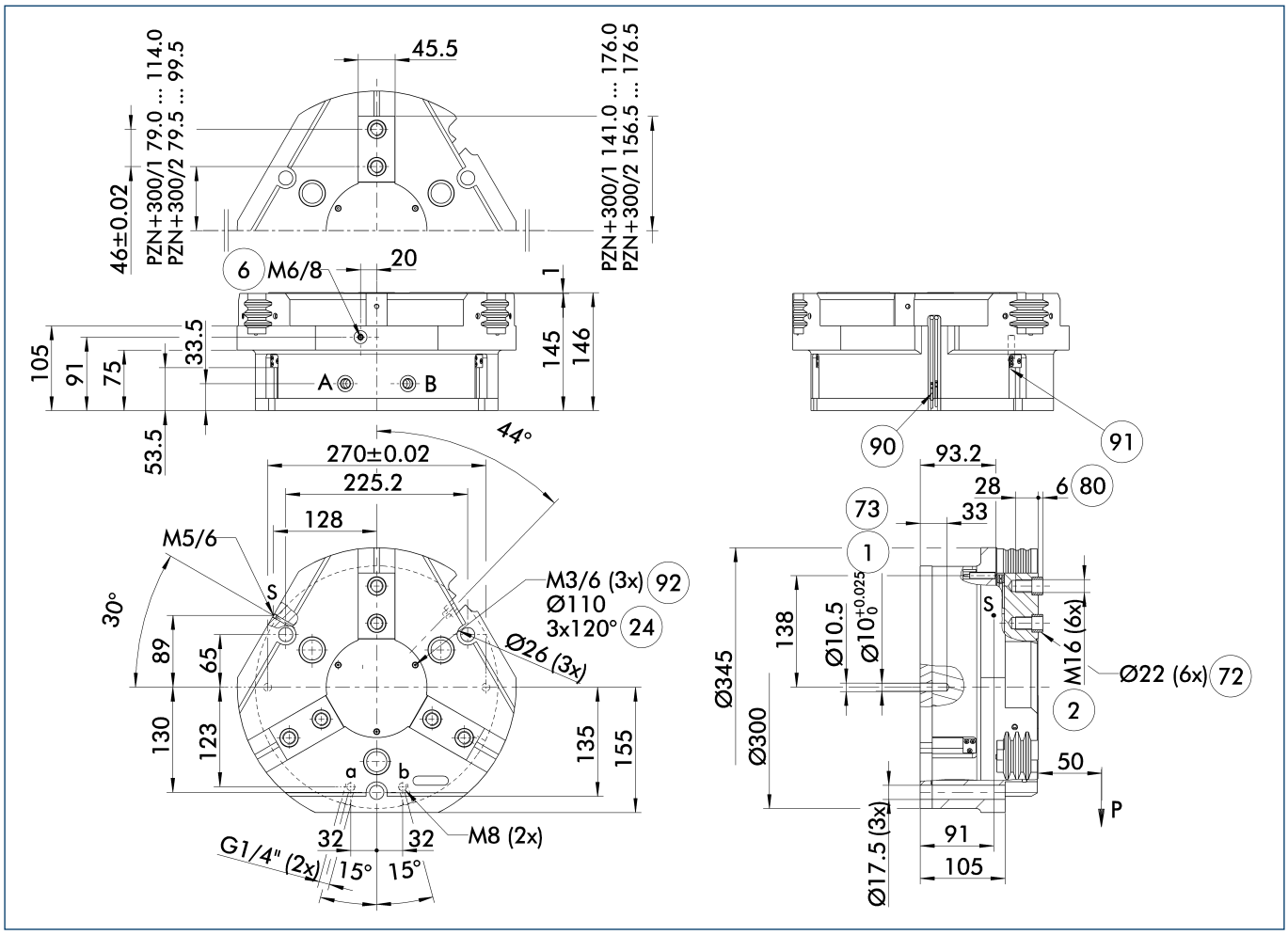

The drawing shows the gripper in the basic version with closed jaws, without dimensional consideration of the options described below.

ⓘ The SDV-P pressure maintenance valve can also be used for I.D. or O.D. gripping alternatively or in addition to the spring-loaded, mechanical gripping force maintenance device (see catalog section on "Accessories").

A, a Main / direct connection, gripper opening

B, b Main / direct connection, gripper closing

S Air purge connection (0.5 ... 1 bar)

(1) Gripper connection

(2) Finger connection

(6) Lubricating nipple connection

(24) Bolt circle

(72) Fit for centering sleeves

(73) Fit for centering pins

(80) Depth of the centering sleeve hole in the mating part

(90) MMS 22... sensor

(91) IN ... sensor

(92) Thread below the cover for fastening external attachments

Hose-free direct connection M8

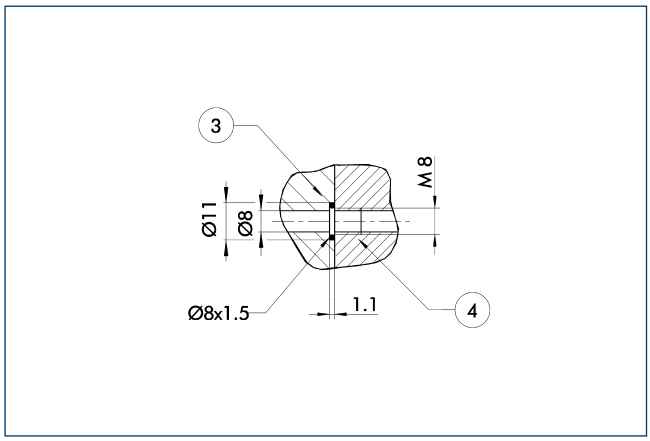

(3) Adapter (4) Gripper

The direct connection is used for supplying compressed air without hoses. Instead, the pressure medium is fed through bore-holes in the mounting plate.

Gripping force maintenance device AS / IS

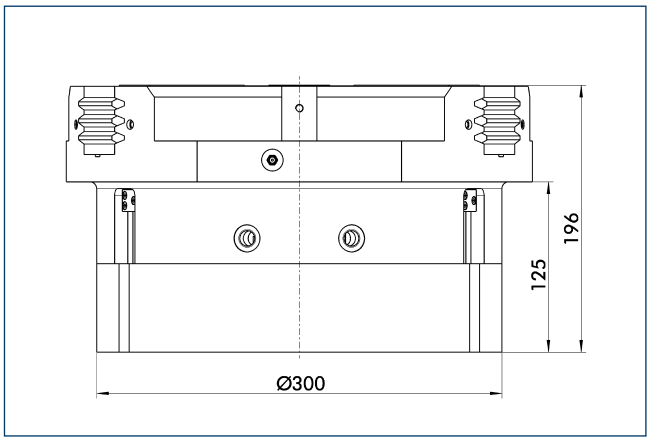

The mechanical maintenance of gripping force also assures a minimum gripping force in the case of a loss of pressure. With the AS / S variant, this acts as a closing force, and as an opening force for the IS variant. The maintenance of gripping force element can also be used as a means for increasing gripping force or for single actuated gripping.

Dust-tight version

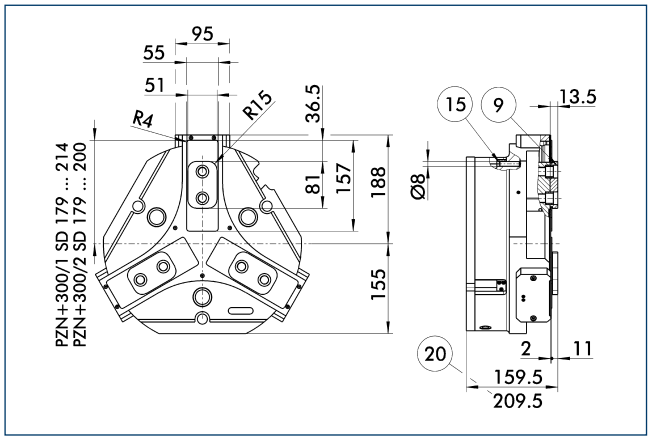

(9) For mounting screw connection diagram, see basic version
(15) Sealing bolt
(20) For AS / IS version

The "dust-protection" option increases the degree of protection against penetrating substances. The screw connection diagram shifts by the height of the intermediate jaw. The finger length is still measured from the upper edge of the gripper housing.

Precision version

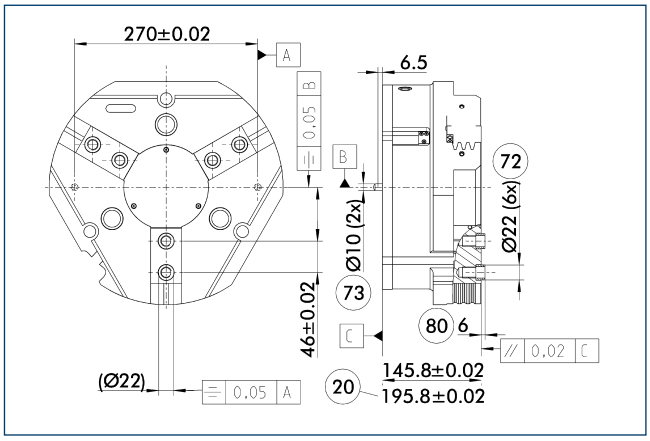

(20) For AS / IS version
(72) Fit for centering sleeves
(73) Fit for centering pins
(80) Depth of the centering sleeve hole in the mating part

The indicated tolerances just refer to the types of precision versions shown in the chart of technical specifications. All other types of precision versions are available on request.

Spring-loaded pressure piece

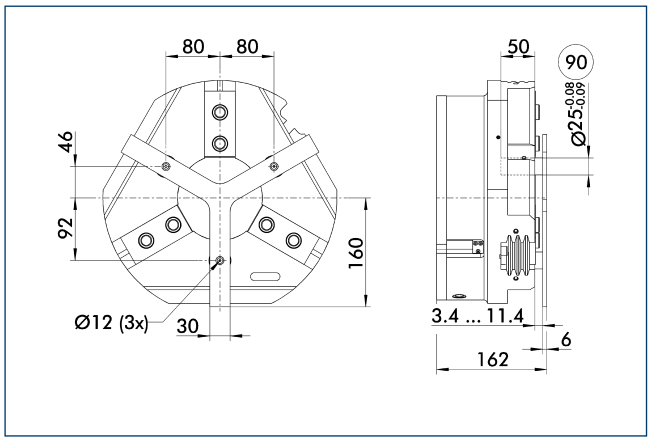

(90) Guide pin

For spring-supported positioning of the workpiece against a stop after the gripper has opened. Especially developed for loading machines.

Description	ID	Stroke [mm]	Min. force [N]
Spring-loaded pressure piece			
A-PZN-plus/DPZ-plus 300	0303727	8	160

ⓘ The pressure piece cannot be combined with the dust-tight option. Please ask for details about a special pressure piece.

SDV-P pressure maintenance valve

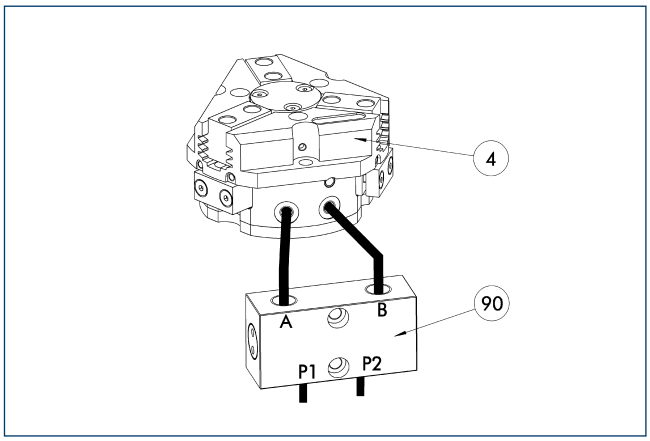

(4) Gripper

(90) SDV-P pressure maintenance valve

The SDV-P pressure maintenance valves ensure that the pressure in the piston chamber of pneumatic gripping, rotary, linear, and quick-change modules is maintained temporarily during an emergency stop.

Description	ID	
Pressure maintenance valve		
SDV-P 10	0300108	

FMS-ZBA / ZBP 300 force-measuring jaws

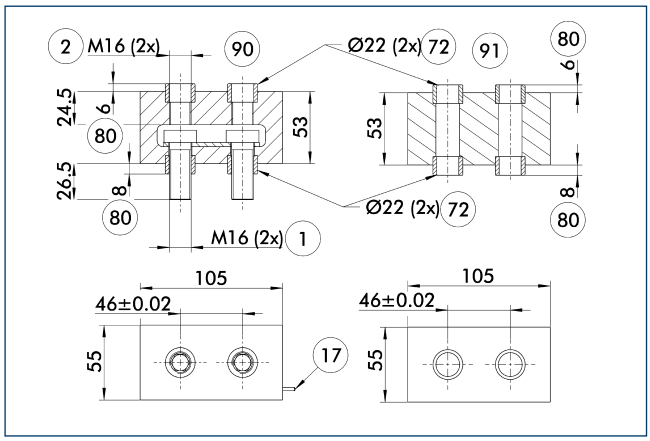

(1) Gripper connection
(2) Finger connection
(17) Cable outlet
(72) Fit for centering sleeves
(80) Depth of the centering sleeve hole in the mating part
(90) Active intermediate jaws
(91) Passive intermediate jaws

Force measuring jaws measure gripping forces, but can also determine workpiece weights or dimensional deviations. There are active and passive intermediate jaws (FMS-ZBA or FMS-ZBP). At least one active force measuring jaw is required per gripper, the rest can be passive. For each active jaw, a FMS-A control unit and a FMS-AK connection cable are required.

Description	ID	Often combined
Active intermediate jaws		
FMS-ZBA 300	0301846	
Passive intermediate jaws		
FMS-ZBP 300	0301847	
Connection cables		
FMS-AK0200	0301820	●
FMS-AK0500	0301821	
FMS-AK1000	0301822	
FMS-AK2000	0301823	
Electronic processor		
FMS-A2	0301811	

ABR- / SBR-PGZN-plus 300 finger blanks

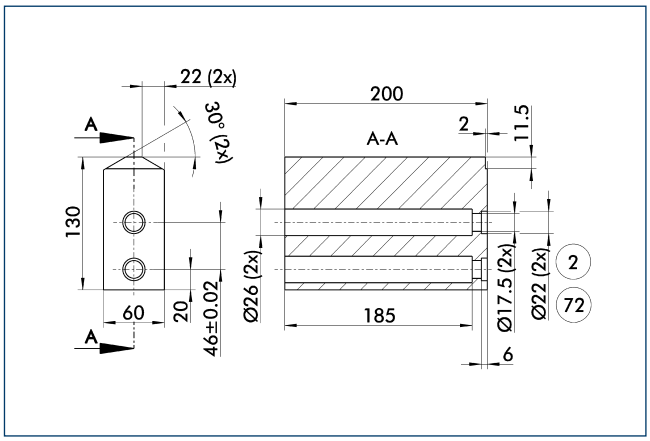

(2) Finger connection
(72) Fit for centering sleeves

Finger blanks for customized subsequent machining.

Description	ID	Material	Scope of delivery
Finger blanks			
ABR-PGZN-plus 300	0300016	Aluminum	1
SBR-PGZN-plus 300	0300026	16MnCr5	1

Inductive proximity switches

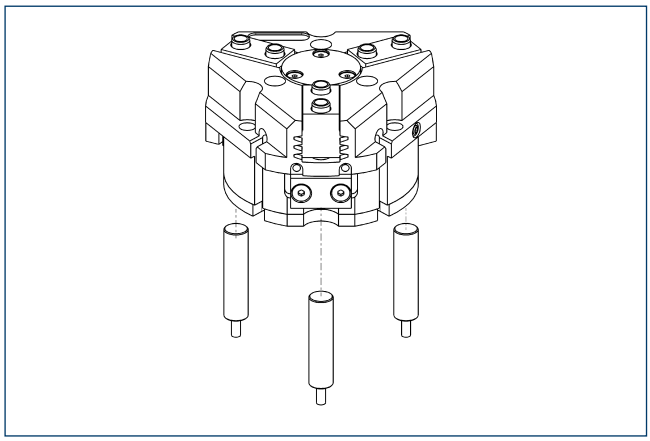

Directly mounted limit position monitor.

Description	ID	Often combined
Inductive proximity switches		
IN 80-S-M12	0301578	
IN 80-S-M8	0301478	●
INK 80-S	0301550	
Cable extensions		
KV BG12-SG12 3P-0030-PNP	0301999	
KV BG12-SG12 3P-0060-PNP	0301998	
KV BW08-SG08 3P-0030-PNP	0301495	
KV BW08-SG08 3P-0100-PNP	0301496	
KV BW08-SG08 3P-0200-PNP	0301497	●
KV BW12-SG12 3P-0030-PNP	0301595	
KV BW12-SG12 3P-0100-PNP	0301596	
KV BW12-SG12 3P-0200-PNP	0301597	
Clip for plug / socket		
CLI-M12	0301464	
CLI-M8	0301463	
Connection cables		
KA BG08-L 3P-0300-PNP	0301622	●
KA BG08-L 3P-0500-PNP	0301623	
KA BG12-L 3P-0500-PNP	30016369	
KA BW08-L 3P-0300-PNP	0301594	
KA BW08-L 3P-0500-PNP	0301502	
KA BW12-L 3P-0300-PNP	0301503	
KA BW12-L 3P-0500-PNP	0301507	
Sensor distributor		
V2-M8	0301775	●
V2-M12	0301776	●
V4-M12	0301747	
V4-M8	0301746	
V8-M12	0301752	
V8-M8	0301751	

ⓘ Two sensors (closer/S) are required for each unit, plus extension cables as an option. Please note the minimum permitted bending radii for the sensor cables, which are generally 35 mm.

Flexible position sensor

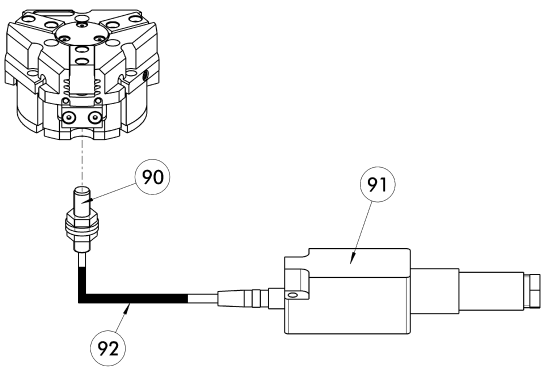

(90) FPS-S sensor
(91) FPS-F5 / -F5 T electronic processor
(92) Cable extensions

Flexible position monitoring of up to five positions.

Description	ID	Often combined
Mounting kit for FPS		
AS-FPS-PGZN-plus 300-2	0301642	
Electronic processor		
FPS-F5	0301805	●
FPS-F5 T	0301807	
Sensor		
FPS-S M8	0301704	
Clip for plug / socket		
CLI-M8	0301463	

ⓘ When using a FPS system, a FPS sensor (FPS-S) and a control unit (FPS-F5 / F5 T) are required for each gripper as well as a mounting kit (AS), if listed. Cable extensions (KV) are available as options in the "Accessories" catalog section.

MMS electronic magnetic switches

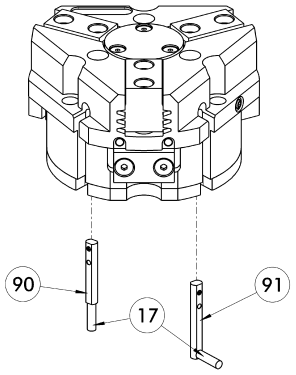

17 Cable outlet
91 MMS 22...-SA sensor
90 MMS 22... sensor

End position monitoring for mounting in the C-slot.

Description	ID	Often combined
MMS electronic magnetic switches		
MMS 22-S-M8-PNP	0301032	●
MMSK 22-S-PNP	0301034	
MMS electronic magnetic switches with lateral cable outlet		
MMS 22-S-M8-PNP-SA	0301042	●
MMSK 22-S-PNP-SA	0301044	
Reed switches		
RMS 22-S-M8	0377720	●
Cable extensions		
KV BW08-SG08 3P-0030-PNP	0301495	
KV BW08-SG08 3P-0100-PNP	0301496	
KV BW08-SG08 3P-0200-PNP	0301497	●
Clip for plug / socket		
CLI-M8	0301463	
Connection cables		
KA BG08-L 3P-0300-PNP	0301622	●
KA BG08-L 3P-0500-PNP	0301623	
KA BW08-L 3P-0300-PNP	0301594	
KA BW08-L 3P-0500-PNP	0301502	
RSS radio sensor system		
RSS-T2	0377710	
Sensor distributor		
V2-M8	0301775	●
V4-M8	0301746	
V8-M8	0301751	

ⓘ Two sensors (closer/S) are required for each unit, plus extension cables as an option. Please note the minimum permitted bending radii for the sensor cables, which are generally 35 mm.

MMS PI1 programmable magnetic switches

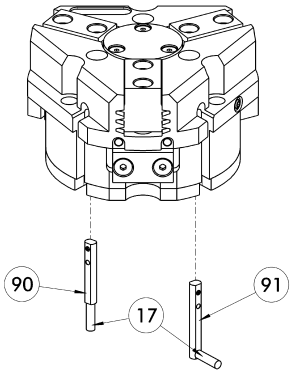

17 Cable outlet
91 MMS 22...-PI1-...-SA sensor
90 MMS 22...-PI1-... sensor

Position query with one programmable position per sensor and electronics integrated in sensor. Programmable via MT magnet teaching tool (included in the scope of delivery) or ST plug teaching tool (optional). Limit position query mounted in C-groove. If the ST plug teaching tools are listed in the table, teaching can only take place with the ST plug teaching tools.

Description	ID	Often combined
Plug teaching tool		
ST-MMS 22-PI1-PNP	0301025	
MMS PI1 programmable magnetic switches		
MMS 22-PI1-S-M8-PNP	0301160	●
MMSK 22-PI1-S-PNP	0301162	
MMS PI1-HD programmable magnetic switches with stainless steel housing		
MMS 22-PI1-S-M8-PNP-HD	0301110	●
MMSK 22-PI1-S-PNP-HD	0301112	
MMS PI1 programmable magnetic switches with lateral cable outlet		
MMS 22-PI1-S-M8-PNP-SA	0301166	●
MMSK 22-PI1-S-PNP-SA	0301168	

ⓘ Two sensors (closer/S) are required for each unit, plus extension cables as an option. Please note the minimum permitted bending radii for the sensor cables, which are generally 35 mm. Connection cable, cable extensions, and sensor distributors can be found in the table for the MMS 22.

APS-Z80 analog position sensor

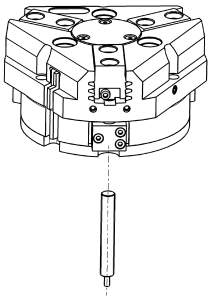

Contactlessly measuring, analog multi-position monitoring for any number of positions.

Description	ID	Often combined
Mounting kit for APS-Z80		
AS-APS-Z80-PGZN-plus 300-1	0302117	
AS-APS-Z80-PGZN-plus 300-2	0302118	
Sensor		
APS-Z80-K	0302072	
APS-Z80-M8	0302070	●

ⓘ When using an APS system, one mounting kit (AS-APS-Z80) and one APS-Z80 sensor is required per gripper.

APS-M1 analog position sensor

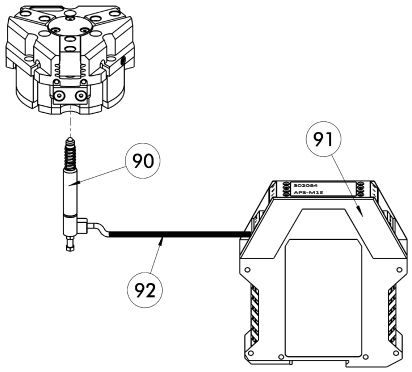

(90) APS-M1S sensor
(91) APS-M1E electronic processor
(92) APS-K extension cable

Analog multi position monitoring for any desired positions.

Description	ID	Often combined
Mounting kit for APS-M1		
AS-APS-M1-PGZN-plus 300-1	0302088	
AS-APS-M1-PGZN-plus 300-2	0302089	
Connection cables		
APS-K0200	0302066	●
APS-K0700	0302068	
Electronic processor		
APS-M1E	0302064	
Sensor		
APS-M1S	0302062	

ⓘ When using an APS system, for each gripper a mounting kit (AS-APS-M1), an APS-M1S sensor (incl. 3 m cable) as well as an electronics (APS-M1e) are required. An extension cable (APS-K) can be connected between the sensor and the electronics as an option. The max. cable length between the sensor and the electronics is 10 m, between the electronics and their control unit (PLC) it is max. 1 m.

Cylindrical reed switches

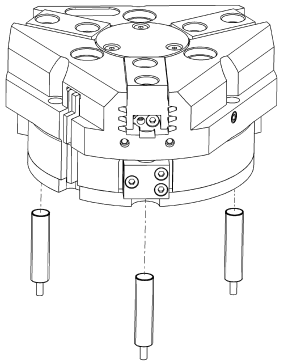

Limit position monitor can be mounted with mounting kit.

Description	ID	
Mounting kit for proximity switch		
AS-RMS 80 PGN/PZN-plus 160-380	0377727	
Reed switches		
RMS 80-S-M8	0377721	

ⓘ Two sensors (closer/S) are required for each unit, plus extension cables as an option. This mounting kit needs to be ordered optionally as an accessory. Two mounting kits are required per gripper. Please note the minimum permitted bending radii for the sensor cables, which are generally 35 mm.

PZN-plus 380

SCHUNK Grippers pneumatic | 3-Finger Centric Grippers | Universal Gripper

Gripping force, O.D. gripping

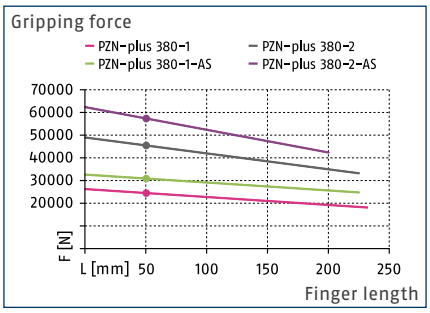

Gripping force, I.D. gripping

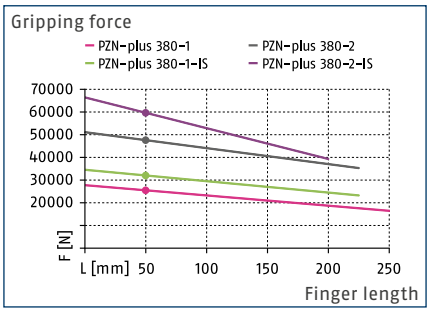

Finger load

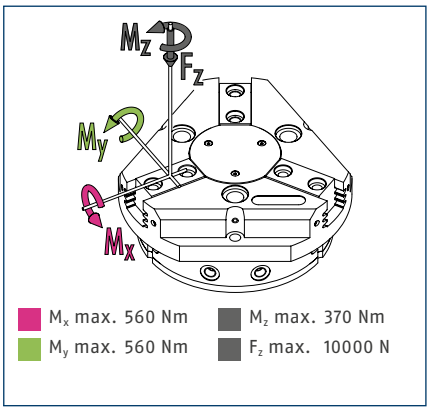

ⓘ The indicated moments and forces are static values, apply per base jaw and may occur simultaneously. M_y may arise in addition to the moment generated by the gripping force itself. If the max. permitted finger weight is exceeded, it is impreative to throttle the air supply so that the jaw movement occurs without any hitting or bouncing. Service life may be reduced.

Technical data

Description		PZN-plus 380-1	PZN-plus 380-2	PZN-plus 380-1-AS	PZN-plus 380-2-AS	PZN-plus 380-1-IS	PZN-plus 380-2-IS
ID		0303318	0303418	0303518	0303618	0303548	0303648
Stroke per jaw	[mm]	45	26	45	26	45	26
Closing- / opening force	[N]	24400/25500	45400/47500	30800/-	57300/-	-/32000	-/59500
min. spring force	[N]			6400	11900	6500	12000
Weight	[kg]	64	66	75	77	75	77
Recommended workpiece weight	[kg]	122	227	122	227	122	227
Fluid consumption per double stroke	[cm³]	7200	7200	9300	9300	11500	11500
min. / max. operating pressure	[bar]	2/8	2/8	4/6.5	4/6.5	4/6.5	4/6.5
Nominal operating pressure	[bar]	6	6	6	6	6	6
Closing- / opening time	[s]	2.2/2.2	2.2/2.2	1.9/3	1.9/3	4.6/1.9	4.6/1.9
Closing- / opening time only with spring	[s]			2.60	2.60	2.20	2.20
max. permitted finger length	[mm]	250	225	225	200	225	200
max. permitted weight per finger	[kg]	13.5	13.5	13.5	13.5	13.5	13.5
IP class		40	40	40	40	40	40
min. / max. ambient temperature	[°C]	5/90	5/90	5/90	5/90	5/90	5/90
Repeat accuracy	[mm]	0.05	0.05	0.05	0.05	0.05	0.05
Cleanroom class ISO 14644-1		5	5	5	5	5	5
Options and their characteristics							
Dust-tight version		37303318	37303418	37303518	37303618	37303548	37303648
IP class		64	64	64	64	64	64
Weight	[kg]	67	69	78	80	78	80
Anti-corrosion version		38303318	38303418	38303518	38303618	38303548	38303648
High-temperature version		39303318	39303418	39303518	39303618	39303548	39303648
min. / max. ambient temperature	[°C]	5/130	5/130	5/130	5/130	5/130	5/130
Precision version		0303348	0303437	0303498	0303598		

ⓘ The full gripping force according to the data table is only realised after around 100 gripping cycles.

Main view

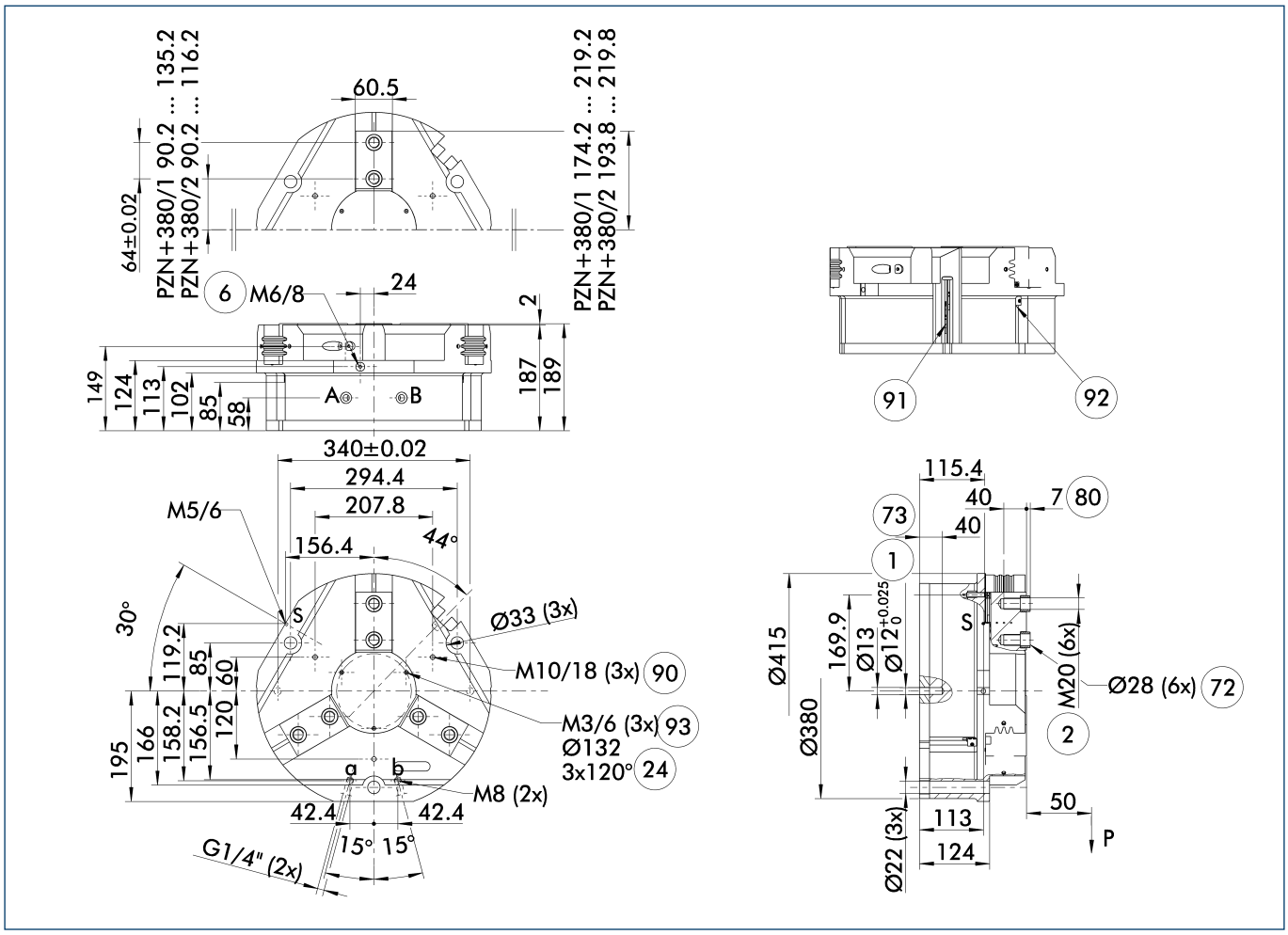

The drawing shows the gripper in the basic version with closed jaws, without dimensional consideration of the options described below.

ⓘ The SDV-P pressure maintenance valve can also be used for I.D. or O.D. gripping alternatively or in addition to the spring-loaded, mechanical gripping force maintenance device (see catalog section on "Accessories").

A, a Main / direct connection, gripper opening

B, b Main / direct connection, gripper closing

S Air purge connection (0.5 ... 1 bar)

(1) Gripper connection

(2) Finger connection

(6) Lubricating nipple connection

(24) Bolt circle

(72) Fit for centering sleeves

(73) Fit for centering pins

(80) Depth of the centering sleeve hole in the mating part

(90) Transport thread

(91) MMS 22... sensor

(92) IN ... sensor

(93) Thread below the cover for fastening external attachments

Hose-free direct connection M8

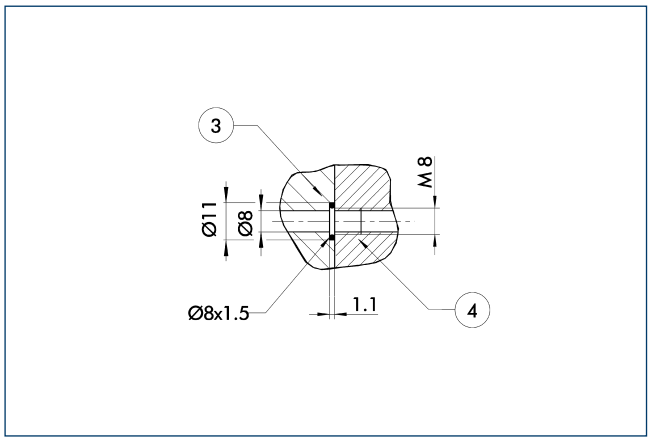

(3) Adapter (4) Gripper

The direct connection is used for supplying compressed air without hoses. Instead, the pressure medium is fed through bore-holes in the mounting plate.

Gripping force maintenance device AS / IS

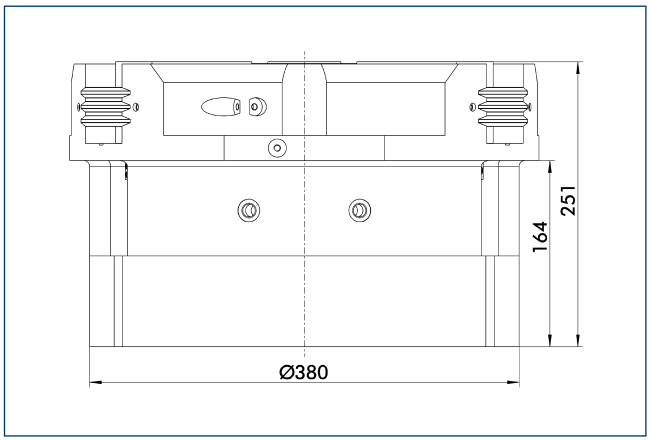

The mechanical maintenance of gripping force also assures a minimum gripping force in the case of a loss of pressure. With the AS / S variant, this acts as a closing force, and as an opening force for the IS variant. The maintenance of gripping force element can also be used as a means for increasing gripping force or for single actuated gripping.

Dust-tight version

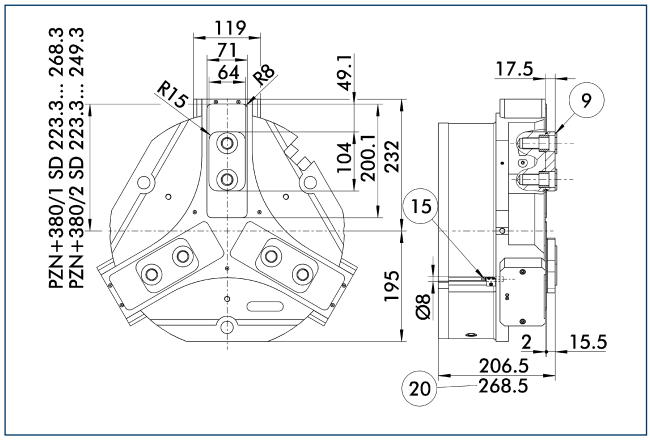

(9) For mounting screw connection diagram, see basic version
(15) Sealing bolt
(20) For AS / IS version

The "dust-protection" option increases the degree of protection against penetrating substances. The screw connection diagram shifts by the height of the intermediate jaw. The finger length is still measured from the upper edge of the gripper housing.

Precision version

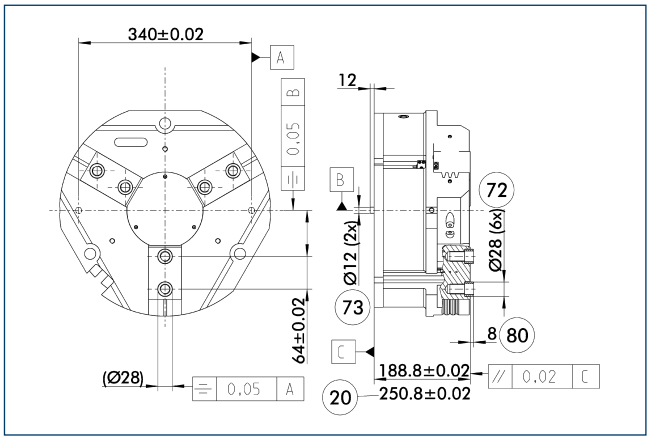

(20) For AS / IS version
(72) Fit for centering sleeves
(73) Fit for centering pins
(80) Depth of the centering sleeve hole in the mating part

The indicated tolerances just refer to the types of precision versions shown in the chart of technical specifications. All other types of precision versions are available on request.

SDV-P pressure maintenance valve

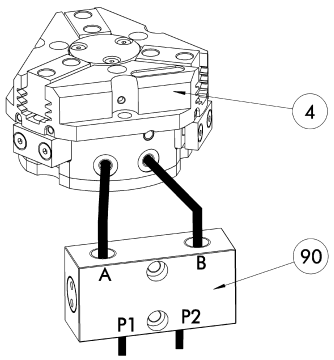

(4) Gripper
(90) SDV-P pressure maintenance valve

The SDV-P pressure maintenance valves ensure that the pressure in the piston chamber of pneumatic gripping, rotary, linear, and quick-change modules is maintained temporarily during an emergency stop.

Description	ID	
Pressure maintenance valve		
SDV-P 10	0300108	

Inductive proximity switches

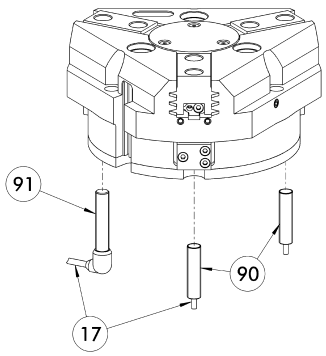

(17) Cable outlet
(91) IN ...-SA sensor
(90) IN ... sensor

Directly mounted limit position monitor.

Description	ID	Often combined
Inductive proximity switches		
IN 80-S-M12	0301578	
IN 80-S-M8	0301478	●
INK 80-S	0301550	
Cable extensions		
KV BG12-SG12 3P-0030-PNP	0301999	
KV BG12-SG12 3P-0060-PNP	0301998	
KV BW08-SG08 3P-0030-PNP	0301495	
KV BW08-SG08 3P-0100-PNP	0301496	
KV BW08-SG08 3P-0200-PNP	0301497	●
KV BW12-SG12 3P-0030-PNP	0301595	
KV BW12-SG12 3P-0100-PNP	0301596	
KV BW12-SG12 3P-0200-PNP	0301597	
Clip for plug / socket		
CLI-M12	0301464	
CLI-M8	0301463	
Connection cables		
KA BG08-L 3P-0300-PNP	0301622	●
KA BG08-L 3P-0500-PNP	0301623	
KA BG12-L 3P-0500-PNP	30016369	
KA BW08-L 3P-0300-PNP	0301594	
KA BW08-L 3P-0500-PNP	0301502	
KA BW12-L 3P-0300-PNP	0301503	
KA BW12-L 3P-0500-PNP	0301507	
Sensor distributor		
V2-M8	0301775	●
V2-M12	0301776	●
V4-M12	0301747	
V4-M8	0301746	
V8-M12	0301752	
V8-M8	0301751	

ⓘ Two sensors (closer/S) are required for each unit, plus extension cables as an option. Please note the minimum permitted bending radii for the sensor cables, which are generally 35 mm.

MMS electronic magnetic switches

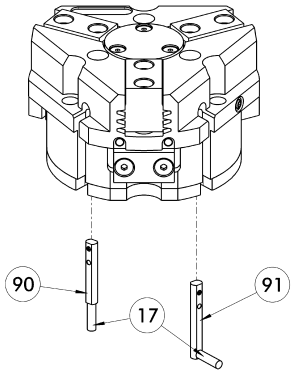

(17) Cable outlet
(91) MMS 22...-SA sensor
(90) MMS 22... sensor

End position monitoring for mounting in the C-slot.

Description	ID	Often combined
MMS electronic magnetic switches		
MMS 22-S-M8-PNP	0301032	●
MMSK 22-S-PNP	0301034	
MMS electronic magnetic switches with lateral cable outlet		
MMS 22-S-M8-PNP-SA	0301042	●
MMSK 22-S-PNP-SA	0301044	
Reed switches		
RMS 22-S-M8	0377720	●
Cable extensions		
KV BW08-SG08 3P-0030-PNP	0301495	
KV BW08-SG08 3P-0100-PNP	0301496	
KV BW08-SG08 3P-0200-PNP	0301497	●
Clip for plug / socket		
CLI-M8	0301463	
Connection cables		
KA BG08-L 3P-0300-PNP	0301622	●
KA BG08-L 3P-0500-PNP	0301623	
KA BW08-L 3P-0300-PNP	0301594	
KA BW08-L 3P-0500-PNP	0301502	
RSS radio sensor system		
RSS-T2	0377710	
Sensor distributor		
V2-M8	0301775	●
V4-M8	0301746	
V8-M8	0301751	

ⓘ Two sensors (closer/S) are required for each unit, plus extension cables as an option. Please note the minimum permitted bending radii for the sensor cables, which are generally 35 mm.

MMS PI1 programmable magnetic switches

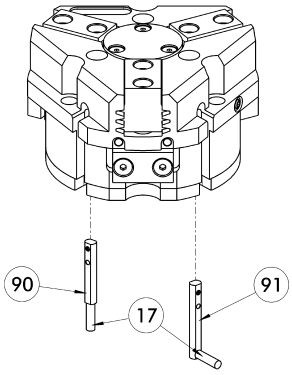

(17) Cable outlet
(91) MMS 22...-PI1-...-SA sensor
(90) MMS 22...-PI1-... sensor

Position query with one programmable position per sensor and electronics integrated in sensor. Programmable via MT magnet teaching tool (included in the scope of delivery) or ST plug teaching tool (optional). Limit position query mounted in C-groove. If the ST plug teaching tools are listed in the table, teaching can only take place with the ST plug teaching tools.

Description	ID	Often combined
MMS PI1 programmable magnetic switches		
MMS 22-PI1-S-M8-PNP	0301160	●
MMSK 22-PI1-S-PNP	0301162	
MMS PI1-HD programmable magnetic switches with stainless steel housing		
MMS 22-PI1-S-M8-PNP-HD	0301110	●
MMSK 22-PI1-S-PNP-HD	0301112	
MMS PI1 programmable magnetic switches with lateral cable outlet		
MMS 22-PI1-S-M8-PNP-SA	0301166	●
MMSK 22-PI1-S-PNP-SA	0301168	

ⓘ Two sensors (closer/S) are required for each unit, plus extension cables as an option. Please note the minimum permitted bending radii for the sensor cables, which are generally 35 mm. Connection cable, cable extensions, and sensor distributors can be found in the table for the MMS 22.

APS-Z80 analog position sensor

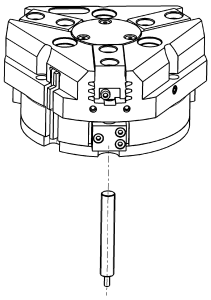

Contactlessly measuring, analog multi-position monitoring for any number of positions.

Description	ID	Often combined
Mounting kit for APS-Z80		
AS-APS-Z80-PGZN-plus 380-1	0302101	
AS-APS-Z80-PGZN-plus 380-2	0302119	
Sensor		
APS-Z80-K	0302072	
APS-Z80-M8	0302070	●

ⓘ When using an APS system, one mounting kit (AS-APS-Z80) and one APS-Z80 sensor is required per gripper.

APS-M1 analog position sensor

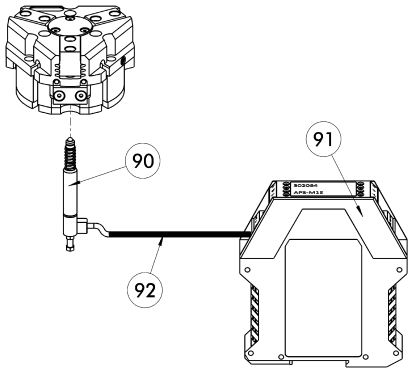

(90) APS-M1S sensor
(91) APS-M1E electronic processor
(92) APS-K extension cable

Analog multi position monitoring for any desired positions.

Description	ID	Often combined
Mounting kit for APS-M1		
AS-APS-M1-PGZN-plus 200-1/380-2	0302085	
AS-APS-M1-PGZN-plus 380-1	0302090	
Connection cables		
APS-K0200	0302066	●
APS-K0700	0302068	
Electronic processor		
APS-M1E	0302064	
Sensor		
APS-M1S	0302062	

ⓘ When using an APS system, for each gripper a mounting kit (AS-APS-M1), an APS-M1S sensor (incl. 3 m cable) as well as an electronics (APS-M1e) are required. An extension cable (APS-K) can be connected between the sensor and the electronics as an option. The max. cable length between the sensor and the electronics is 10 m, between the electronics and their control unit (PLC) it is max. 1 m.

Cylindrical reed switches

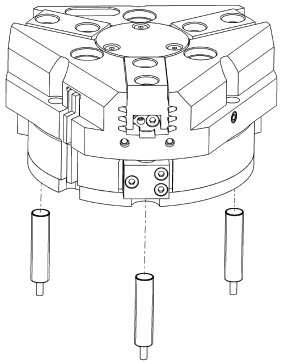

Limit position monitor can be mounted with mounting kit.

Description	ID	
Mounting kit for proximity switch		
AS-RMS 80 PGN/PZN-plus 160-380	0377727	
Reed switches		
RMS 80-S-M8	0377721	

ⓘ Two sensors (closer/S) are required for each unit, plus extension cables as an option. This mounting kit needs to be ordered optionally as an accessory. Two mounting kits are required per gripper. Please note the minimum permitted bending radii for the sensor cables, which are generally 35 mm.

Loadable. Reliable. Compact.
JGZ Universal Gripper

Universal gripper of the compact class with T-slot guidance and best cost-performance ratio

Field of Application

Optimal standard solution for many fields of application. Universal application in clean and slightly dirty surroundings in machine building and plant building industry, assembly and handling as well as automotive industry.

Advantages – Your benefit

A firm focus on the essentials for maximum profitability

Sturdy T-slot guidance for the precise handling of different kinds of workpieces

Compact dimensions and low weight for minimal interfering contours in handling

High maximum moments possible suitable for using long gripper fingers

Wedge-hook design for high power transmission and synchronized gripping

Comprehensive sensor accessories for interrogation and control of the stroke position

Fastening at one gripper side in two screw directions for universal and flexible gripper assembly

Air supply via hose-free direct connection or screw connections for flexible pressure supply in all automated systems

Sizes	Weight	Gripping force	Stroke per jaw	Workpiece weight
Quantity: 7	0.12 .. 8 kg	255 .. 7990 N	2.5 .. 16 mm	1.25 .. 30 kg

Functional Description

The piston is moved up and down by compressed air.
The angled active surfaces of the wedge-hook produce a synchronized, centric jaw movement.

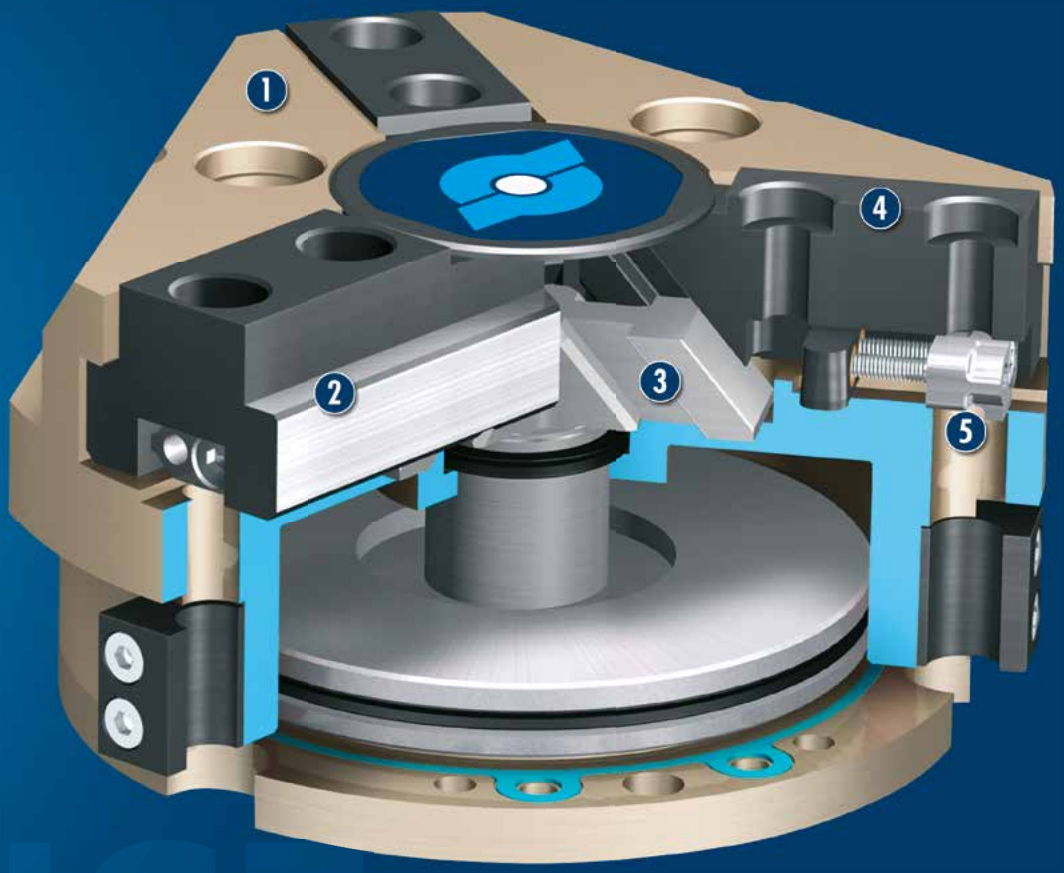

① **Housing**
Weight-optimized through application of high-strength aluminum alloy

② **T-slot guidance**
Loadable, robust base jaw guidance for extremely long gripper fingers

③ **Wedge-hook design**
for high power transmission and centric gripping

④ **Base jaw**
for the connection of workpiece-specific gripper fingers

⑤ **Sensor system**
Proximity switch can be assembled without mounting kit

CAD data, operating manuals and other current product documents are available at **www.schunk.com**

General Notes about the Series

Operating principle: Wedge-hook kinematics

Housing material: Aluminum alloy, anodized

Base jaw material: Steel

Actuation: pneumatic, with filtered compressed air as per DIN ISO 8573-1: 7 4 4

Warranty: 24 months (details, general terms and conditions and operating manuals can be downloaded at www.schunk.com)

Scope of delivery: Mount for proximity switch, centering sleeves, O-rings for direct connection, assembly and operating manual with declaration of incorporation.

Gripping force maintenance device: possible with variants with mechanical maintenance of gripping force or SDV-P pressure maintenance valve

Gripping force: is the arithmetic total of the gripping force applied to each gripper jaw at distance P (see illustration).

Finger length: is measured from the upper edge of the gripper housing in the direction of the main axis. The breach of the max. permitted finger length can bring higher abrasion. The maximum permissible finger length applies up to the nominal operating pressure. With higher pressures, the finger length must be reduced proportionally to the nominal operating pressure.

Repeat accuracy: is defined as the spread of the limit position after 100 consecutive strokes.

Workpiece weight: is calculated for a force-fit connection with a coefficient of friction of 0.1 and a safety factor of 2 against slippage of the workpiece on acceleration due to gravity g. Considerably heavier workpiece weights are permitted with form-fit gripping.

Closing and opening times: are purely the times that the base jaws or fingers are in motion. Valve switching times, hose filling times or PLC reaction times are not included in the above times and must be taken into consideration when determining cycle times.

Application example

Tactile assembly of insertion aids in cylinder heads

1. JGZ 3-Finger Centric Gripper with workpiece-specific gripper fingers
2. FTC-050-80 6-Axis Force-Torque Sensor

SCHUNK offers more ...

The following components make the product JGZ even more productive – the suitable addition for the highest functionality, flexibility, reliability, and controlled production.

TCU Tolerance Compensation Unit

AGE-F Compensation Unit

Magnetic Switches

Inductive Proximity Switches

Flexible Position Sensor

Jaw Quick-change System

Sensor Distributor

Universal Intermediate Jaw

SDV-P Pressure Maintenance Valve

Finger Blanks with Jaw Quick-change System

Force Measuring Jaws

Analog Position Sensor

ⓘ Further information regarding the products can be found on the following product pages or at www.schunk.com. Please contact us for further information: SCHUNK technical hotline +49-7133-103-2696

Options and special Information

Gripping force maintenance version AS / IS: The mechanical gripping force maintenance version ensures a minimum gripping force also in the case of a drop in pressure. In the AS / S version this has the effect of a closing force, in the IS version of an opening force.
The JGZ series is especially suitable for economic handling solutions and distinguishes by its high cost-benefit ratio.

JGZ 40

SCHUNK Grippers pneumatic | 3-Finger Centric Grippers | Universal Gripper

Gripping force, O.D. gripping

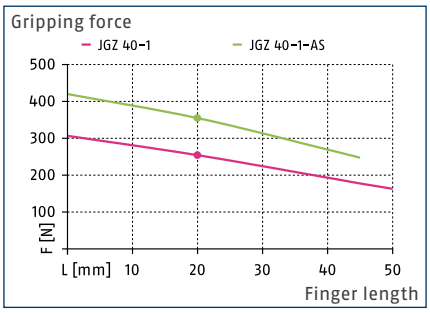

Gripping force, I.D. gripping

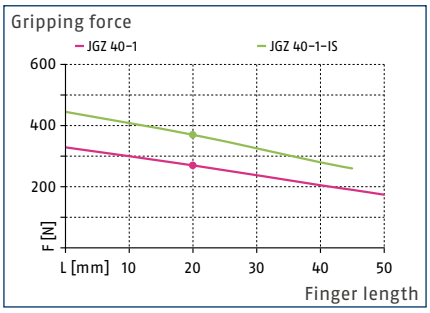

Finger load

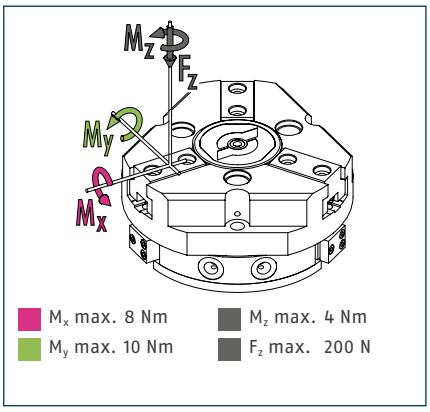

ⓘ The indicated moments and forces are static values, apply per base jaw and may occur simultaneously. M_y may arise in addition to the moment generated by the gripping force itself. If the max. permitted finger weight is exceeded, it is impreative to throttle the air supply so that the jaw movement occurs without any hitting or bouncing. Service life may be reduced.

Technical data

Description		JGZ 40-1	JGZ 40-1 AS	JGZ 40-1 IS
ID		0308900	0308901	0308902
Stroke per jaw	[mm]	2.5	2.5	2.5
Closing- / opening force	[N]	255/270	355/-	-/370
min. spring force	[N]		100	100
Weight	[kg]	0.12	0.15	0.15
Recommended workpiece weight	[kg]	1.25	1.25	1.25
Fluid consumption per double stroke	[cm³]	5	9	9
min. / max. operating pressure	[bar]	2/8	4/6.5	4/6.5
Nominal operating pressure	[bar]	6	6	6
Closing- / opening time	[s]	0.02/0.03	0.02/0.04	0.04/0.02
Closing- / opening time only with spring	[s]		0.05	0.05
max. permitted finger length	[mm]	50	45	45
max. permitted weight per finger	[kg]	0.1	0.1	0.1
IP class		40	40	40
min. / max. ambient temperature	[°C]	5/90	5/90	5/90
Repeat accuracy	[mm]	0.01	0.01	0.01
Cleanroom class ISO 14644-1		5	5	5

Main view

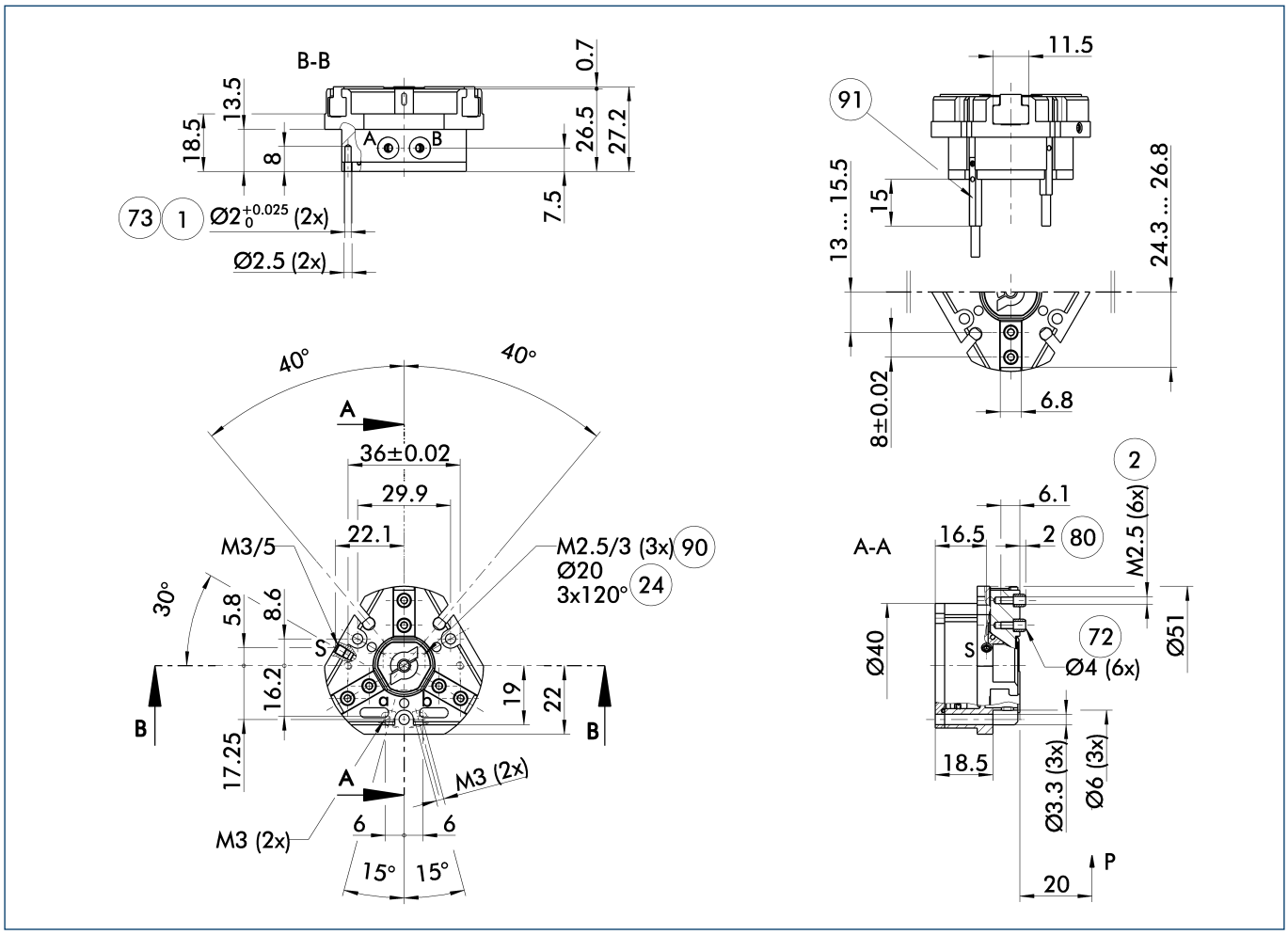

The drawing shows the gripper in the basic version with closed jaws, without dimensional consideration of the options described below.

ⓘ The SDV-P pressure maintenance valve can also be used for I.D. or O.D. gripping alternatively or in addition to the spring-loaded, mechanical gripping force maintenance device (see catalog section on "Accessories").

A, a Main / direct connection, gripper opening

B, b Main / direct connection, gripper closing

S Air purge connection (0.5 ... 1 bar)

(1) Gripper connection

(2) Finger connection

(24) Bolt circle

(72) Fit for centering sleeves

(73) Fit for centering pins

(80) Depth of the centering sleeve hole in the mating part

(90) Thread below the cover for fastening external attachments

(91) MMS 22... sensor

Hose-free direct connection M3

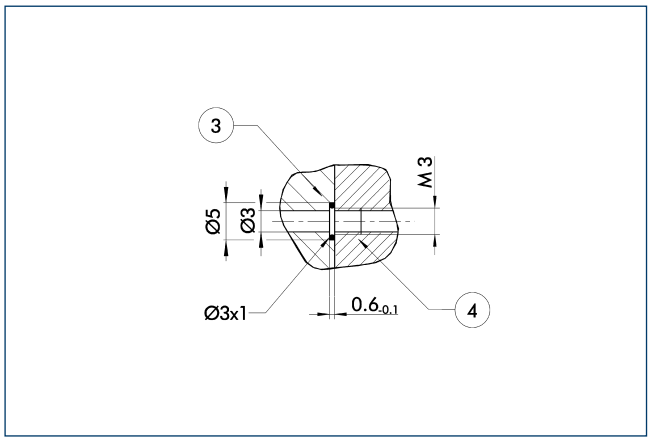

(3) Adapter (4) Gripper

The direct connection is used for supplying compressed air without hoses. Instead, the pressure medium is fed through bore-holes in the mounting plate.

Gripping force maintenance device AS / IS

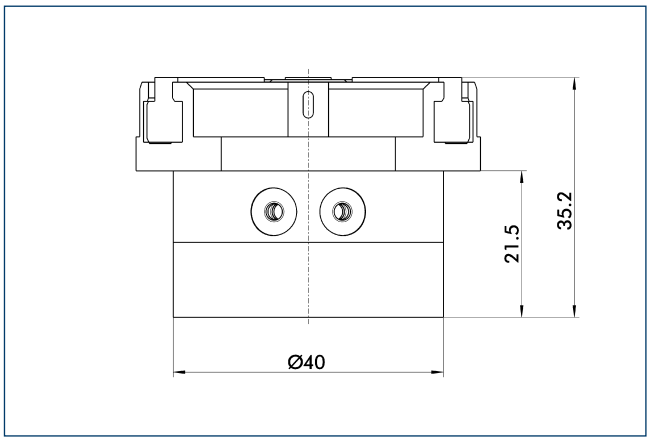

The mechanical maintenance of gripping force also assures a minimum gripping force in the case of a loss of pressure. With the AS / S variant, this acts as a closing force, and as an opening force for the IS variant. The maintenance of gripping force element can also be used as a means for increasing gripping force or for single actuated gripping.

Spring-loaded pressure piece

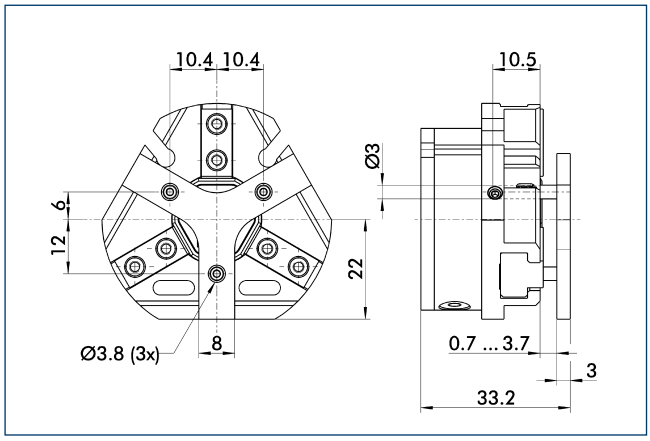

For spring-supported positioning of the workpiece against a stop after the gripper has opened. Especially developed for loading machines.

Description	ID	Stroke [mm]	Min. force [N]
Spring-loaded pressure piece			
A-PZN-plus 40	0303718	2.5	5

SDV-P pressure maintenance valve

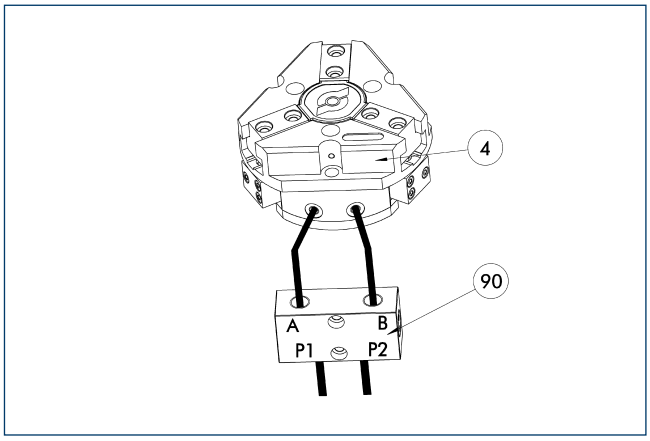

(4) Gripper (90) SDV-P pressure maintenance valve

The SDV-P pressure maintenance valves ensure that the pressure in the piston chamber of pneumatic gripping, rotary, linear, and quick-change modules is maintained temporarily during an emergency stop.

Description	ID	
Pressure maintenance valve		
SDV-P 04	0403130	

UZB 40 universal intermediate jaw

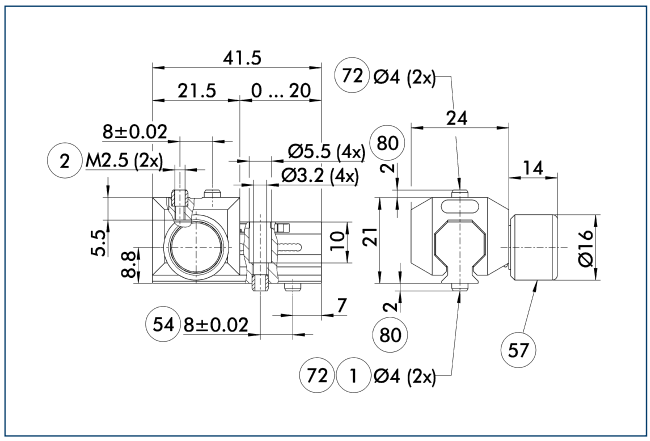

1 Gripper connection
2 Finger connection
54 Optional right or left connection
57 Locking
72 Fit for centering sleeves
80 Depth of the centering sleeve hole in the mating part

The universal intermediate jaw allows fast tool-free and reliable plugging and shifting of top jaws at the gripper.

Description	ID	Grid dimension [mm]
Universal intermediate jaw		
UZB 40	0300040	1
Finger blanks		
ABR-PGZN-plus 40	0300008	
SBR-PGZN-plus 40	0300018	

ABR- / SBR-PGZN-plus 40 finger blanks

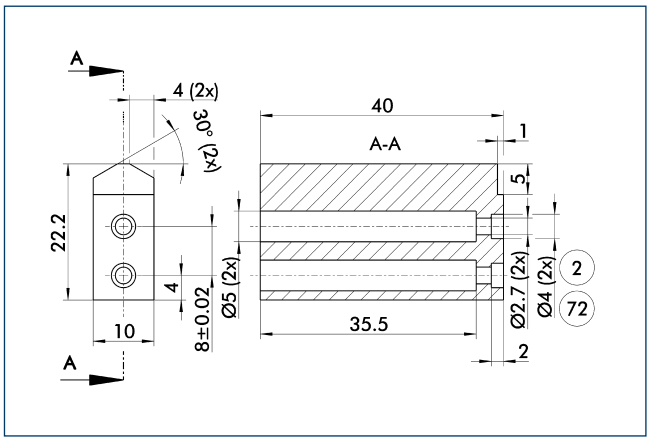

2 Finger connection
72 Fit for centering sleeves

Finger blanks for customized subsequent machining.

Description	ID	Material	Scope of delivery
Finger blanks			
ABR-PGZN-plus 40	0300008	Aluminum	1
SBR-PGZN-plus 40	0300018	16MnCr5	1

MMS electronic magnetic switches

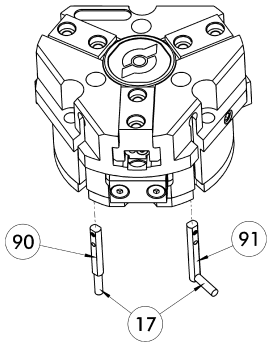

(17) Cable outlet
(91) MMS 22...-SA sensor
(90) MMS 22... sensor

End position monitoring for mounting in the C-slot.

Description	ID	Often combined
MMS electronic magnetic switches		
MMS 22-S-M8-PNP	0301032	●
MMSK 22-S-PNP	0301034	
MMS electronic magnetic switches with lateral cable outlet		
MMS 22-S-M8-PNP-SA	0301042	●
MMSK 22-S-PNP-SA	0301044	
Cable extensions		
KV BW08-SG08 3P-0030-PNP	0301495	
KV BW08-SG08 3P-0100-PNP	0301496	
KV BW08-SG08 3P-0200-PNP	0301497	●
Clip for plug / socket		
CLI-M8	0301463	
Connection cables		
KA BG08-L 3P-0300-PNP	0301622	●
KA BG08-L 3P-0500-PNP	0301623	
KA BW08-L 3P-0300-PNP	0301594	
KA BW08-L 3P-0500-PNP	0301502	
Sensor distributor		
V2-M8	0301775	●
V4-M8	0301746	
V8-M8	0301751	

ⓘ Two sensors (closer/S) are required for each unit, plus extension cables as an option. Please note the minimum permitted bending radii for the sensor cables, which are generally 35 mm.

MMS PI1 programmable magnetic switches

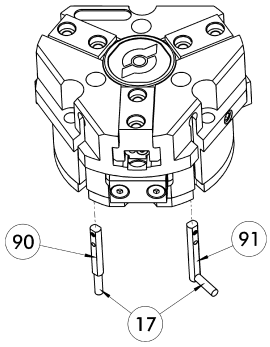

(17) Cable outlet
(91) MMS 22...-PI1-...-SA sensor
(90) MMS 22...-PI1-... sensor

Position query with one programmable position per sensor and electronics integrated in sensor. Programmable via MT magnet teaching tool (included in the scope of delivery) or ST plug teaching tool (optional). Limit position query mounted in C-groove. If the ST plug teaching tools are listed in the table, teaching can only take place with the ST plug teaching tools.

Description	ID	Often combined
Plug teaching tool		
ST-MMS 22-PI1-PNP	0301025	
MMS PI1 programmable magnetic switches		
MMS 22-PI1-S-M8-PNP	0301160	●
MMSK 22-PI1-S-PNP	0301162	
MMS PI1-HD programmable magnetic switches with stainless steel housing		
MMS 22-PI1-S-M8-PNP-HD	0301110	●
MMSK 22-PI1-S-PNP-HD	0301112	
MMS PI1 programmable magnetic switches with lateral cable outlet		
MMS 22-PI1-S-M8-PNP-SA	0301166	●
MMSK 22-PI1-S-PNP-SA	0301168	

ⓘ Two sensors (closer/S) are required for each unit, plus extension cables as an option. Please note the minimum permitted bending radii for the sensor cables, which are generally 35 mm. Connection cable, cable extensions, and sensor distributors can be found in the table for the MMS 22.

MMS PI2 programmable magnetic switches

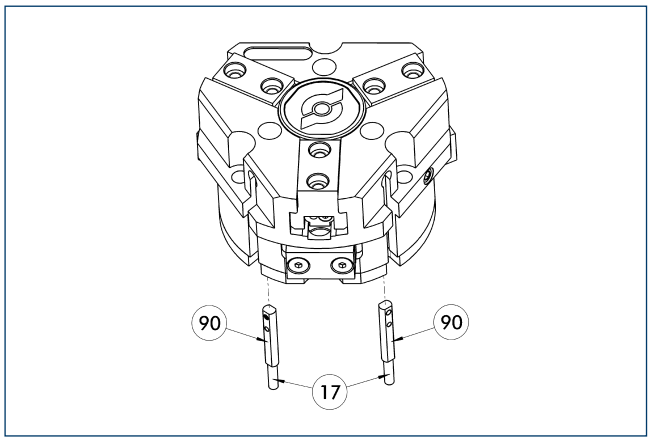

(17) Cable outlet (90) MMS 22...-PI2-... sensor

Position query with two programmable positions per sensor and electronics integrated in sensor. Programmable via MT magnet teaching tool (included in the scope of delivery) or ST plug teaching tool (optional). Limit position query mounted in C-groove. If the ST plug teaching tools are listed in the table, teaching can only take place with the ST plug teaching tools.

Description	ID	Often combined
Plug teaching tool		
ST-MMS 22-PI2-PNP	0301026	
MMS PI2 programmable magnetic switches		
MMS 22-PI2-S-M8-PNP	0301180	●
MMSK 22-PI2-S-PNP	0301182	
MMS PI2-HD programmable magnetic switches with stainless steel housing		
MMS 22-PI2-S-M8-PNP-HD	0301130	●
MMSK 22-PI2-S-PNP-HD	0301132	

ⓘ Per unit one sensor (closer/S) is required, optionally a cable extension. Please note the minimum permitted bending radii for the sensor cables, which are generally 35 mm. Connection cable, cable extensions, and sensor distributors can be found in the table for the MMS-P 22.

MMS-P programmable magnetic switches

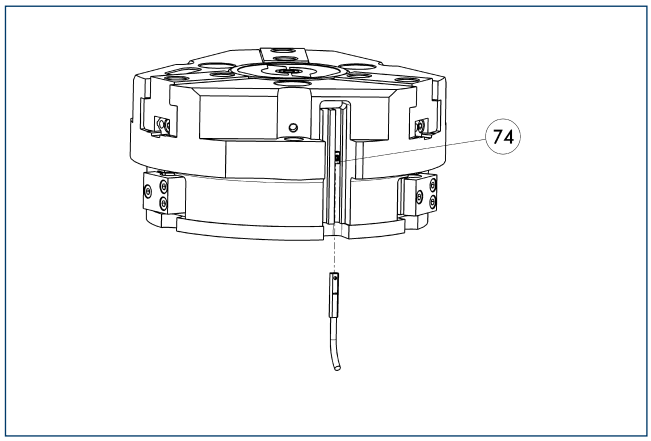

(74) Stop for MMS-P

Position monitoring with two programmable positions per sensor. The end position monitoring is mounted in the C-slot.

Description	ID	Often combined
MMS-P programmable magnetic switches		
MMSK-P 22-S-PNP	0301371	
MMS-P 22-S-M8-PNP	0301370	●
Clip for plug / socket		
CLI-M8	0301463	
Connection cables		
KA BG08-L 4P-0500	0307767	●
KA BG08-L 4P-1000	0307768	
KA BW08-L 4P-0500	0307765	
KA BW08-L 4P-1000	0307766	
Sensor distributor		
V2-M8-4P-2XM8-3P	0301380	

ⓘ Per unit one sensor (closer/S) is required, optionally a cable extension. Please note the minimum permitted bending radii for the sensor cables, which are generally 35 mm.

JGZ 50

SCHUNK Grippers pneumatic | 3-Finger Centric Grippers | Universal Gripper

Gripping force, O.D. gripping

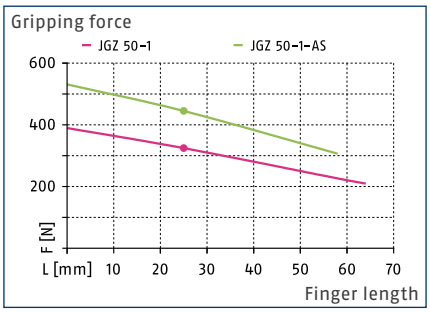

Gripping force, I.D. gripping

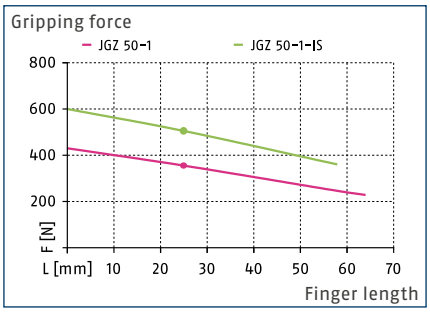

Finger load

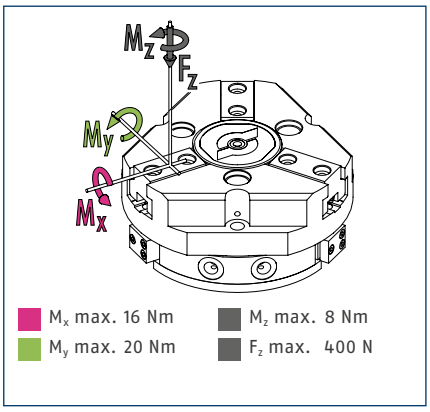

ⓘ The indicated moments and forces are static values, apply per base jaw and may occur simultaneously. M_y may arise in addition to the moment generated by the gripping force itself. If the max. permitted finger weight is exceeded, it is impreative to throttle the air supply so that the jaw movement occurs without any hitting or bouncing. Service life may be reduced.

Technical data

Description		JGZ 50-1	JGZ 50-1 AS	JGZ 50-1 IS
ID		0308910	0308911	0308912
Stroke per jaw	[mm]	4	4	4
Closing- / opening force	[N]	325/355	445/-	-/505
min. spring force	[N]		120	150
Weight	[kg]	0.25	0.3	0.3
Recommended workpiece weight	[kg]	1.6	1.6	1.6
Fluid consumption per double stroke	[cm³]	9	18	18
min. / max. operating pressure	[bar]	2/8	4/6.5	4/6.5
Nominal operating pressure	[bar]	6	6	6
Closing- / opening time	[s]	0.03/0.03	0.02/0.04	0.04/0.02
Closing- / opening time only with spring	[s]		0.05	0.05
max. permitted finger length	[mm]	64	58	58
max. permitted weight per finger	[kg]	0.18	0.18	0.18
IP class		40	40	40
min. / max. ambient temperature	[°C]	5/90	5/90	5/90
Repeat accuracy	[mm]	0.01	0.01	0.01
Cleanroom class ISO 14644-1		5	5	5

Main view

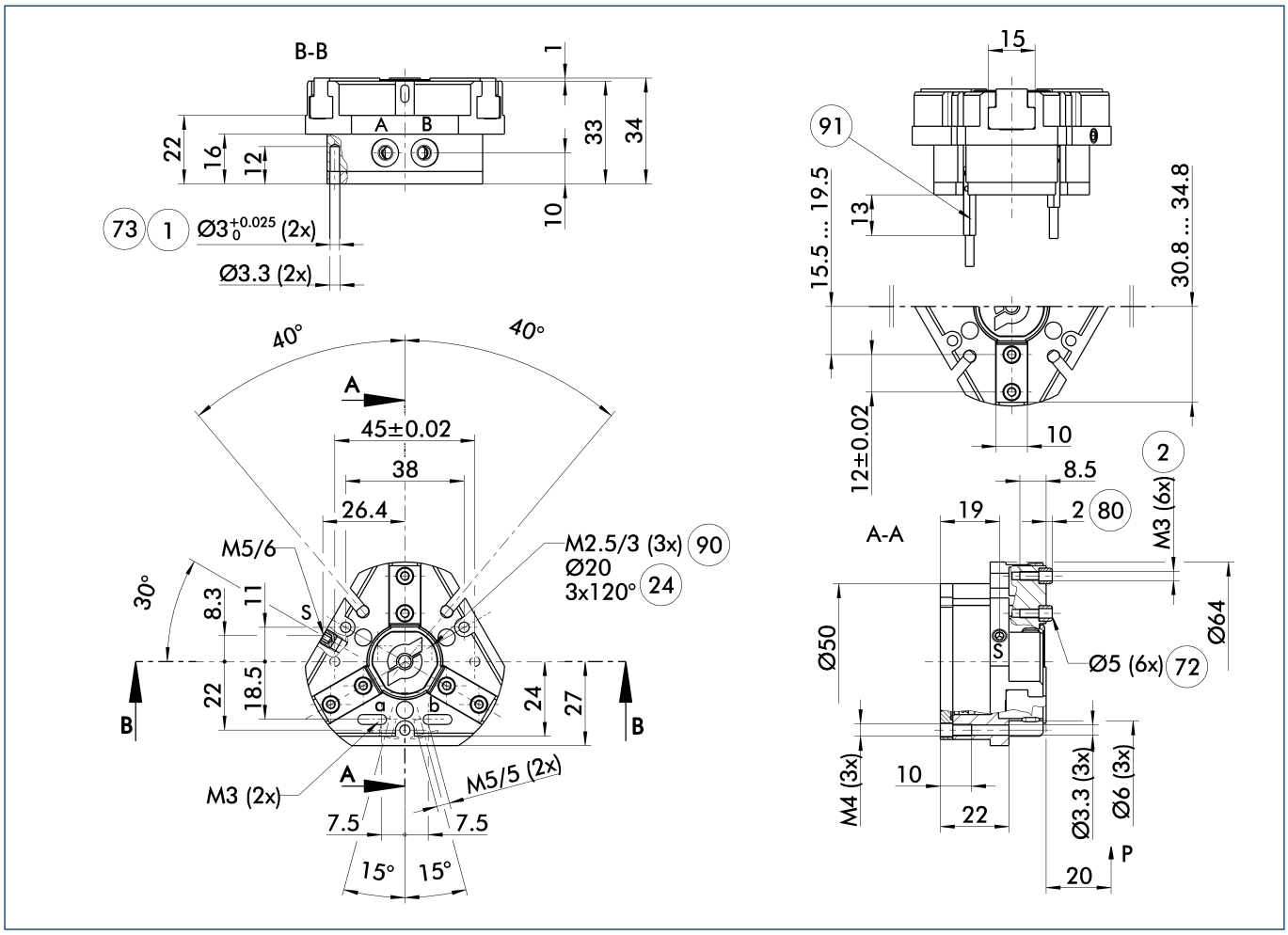

The drawing shows the gripper in the basic version with closed jaws, without dimensional consideration of the options described below.

ⓘ The SDV-P pressure maintenance valve can also be used for I.D. or O.D. gripping alternatively or in addition to the spring-loaded, mechanical gripping force maintenance device (see catalog section on "Accessories").

A, a Main / direct connection, gripper opening

B, b Main / direct connection, gripper closing

S Air purge connection (0.5 ... 1 bar)

(1) Gripper connection

(2) Finger connection

(24) Bolt circle

(72) Fit for centering sleeves

(73) Fit for centering pins

(80) Depth of the centering sleeve hole in the mating part

(90) Thread below the cover for fastening external attachments

(91) MMS 22... sensor

Hose-free direct connection M3

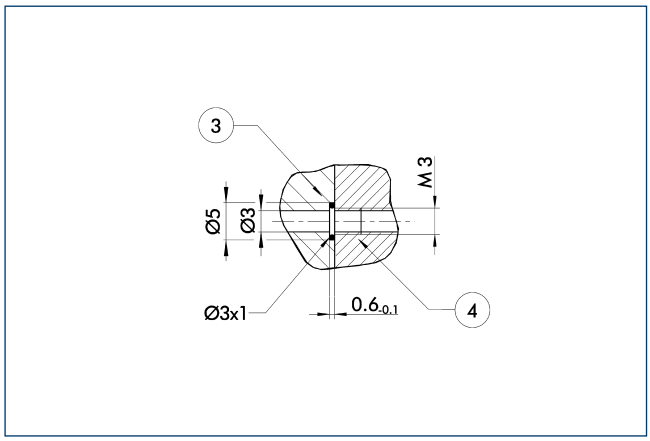

3 Adapter 4 Gripper

The direct connection is used for supplying compressed air without hoses. Instead, the pressure medium is fed through bore-holes in the mounting plate.

Gripping force maintenance device AS / IS

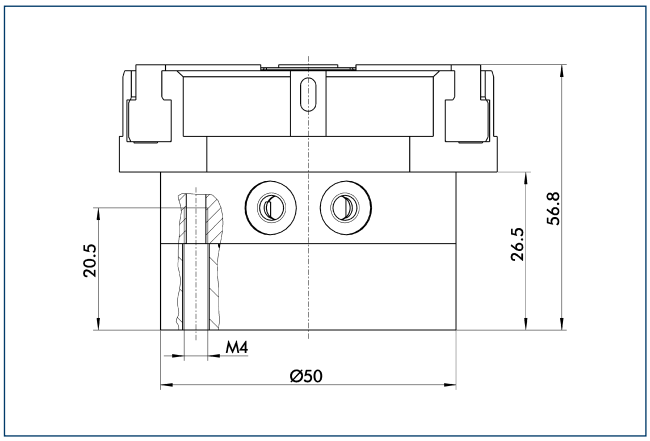

The mechanical maintenance of gripping force also assures a minimum gripping force in the case of a loss of pressure. With the AS / S variant, this acts as a closing force, and as an opening force for the IS variant. The maintenance of gripping force element can also be used as a means for increasing gripping force or for single actuated gripping.

Spring-loaded pressure piece

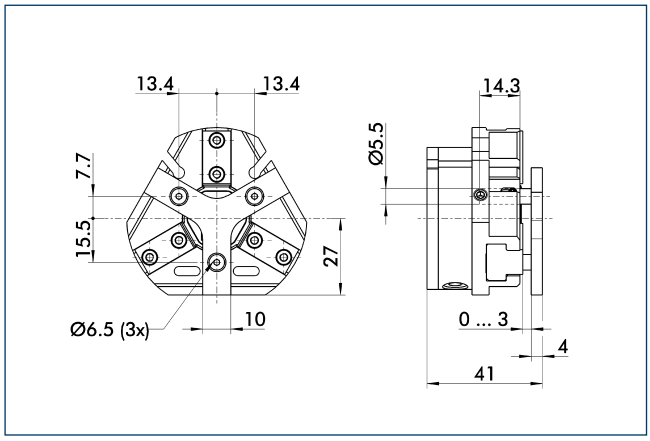

For spring-supported positioning of the workpiece against a stop after the gripper has opened. Especially developed for loading machines.

Description	ID	Stroke [mm]	Min. force [N]
Spring-loaded pressure piece			
A-PZN-plus 50	0303719	3	12

SDV-P pressure maintenance valve

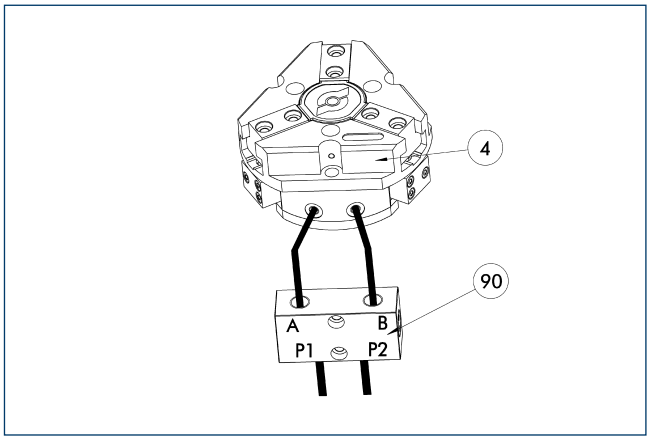

4 Gripper 90 SDV-P pressure maintenance valve

The SDV-P pressure maintenance valves ensure that the pressure in the piston chamber of pneumatic gripping, rotary, linear, and quick-change modules is maintained temporarily during an emergency stop.

Description	ID	
Pressure maintenance valve		
SDV-P 04	0403130	

BSWS jaw quick-change systems

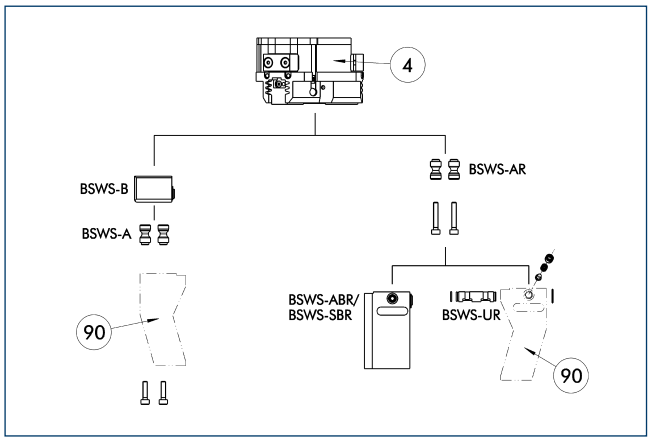

(4) Gripper
(90) Customized gripper fingers

There are various jaw quick-change systems available for the grippers. For detailed information, refer to the appropriate product.

Description	ID	
Jaw quick-change system adapter		
BSWS-AR 50	0300091	
BSWS-A 50	0303020	
Jaw quick-change system base		
BSWS-B 50	0303021	
Finger blanks with jaw quick-change system		
BSWS-ABR-PGZN-plus 50	0300071	
BSWS-SBR-PGZN-plus 50	0300081	
Jaw quick-change system reversed		
BSWS-UR 50	0302990	

ⓘ Only the systems listed in the table can be used.

ZBA L-plus 50 intermediate jaws

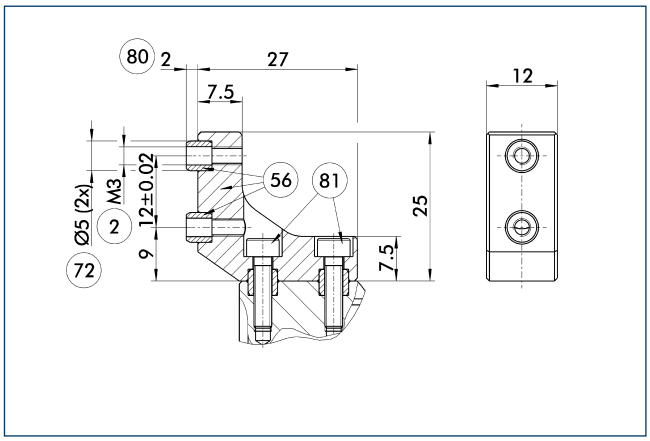

(2) Finger connection
(56) Included in delivery
(72) Fit for centering sleeves
(80) Depth of the centering sleeve hole in the mating part
(81) Not included in the scope of delivery

Optionally intermediate jaws can be used, enabling direct connection and alignment of top jaws and various standard accessories in Z-direction.

Description	ID	Material	Scope of delivery
Intermediate jaws			
ZBA-L-plus 50	0311712	Aluminum	1

UZB 50 universal intermediate jaw

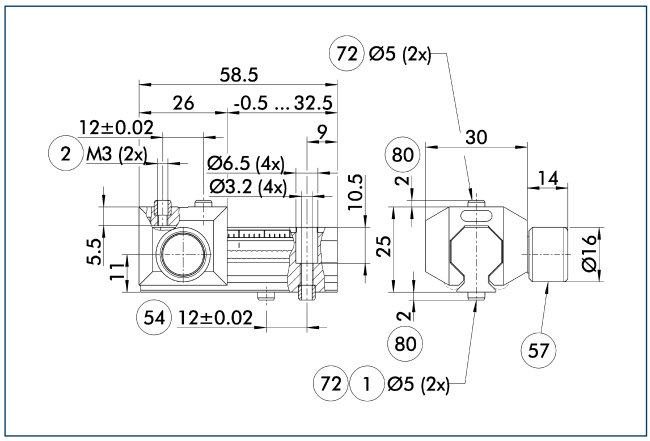

1 Gripper connection
2 Finger connection
54 Optional right or left connection
57 Locking
72 Fit for centering sleeves
80 Depth of the centering sleeve hole in the mating part

The universal intermediate jaw allows fast tool-free and reliable plugging and shifting of top jaws at the gripper.

Description	ID	Grid dimension [mm]
Universal intermediate jaw		
UZB 50	0300041	1.5
Finger blanks		
ABR-PGZN-plus 50	0300009	
SBR-PGZN-plus 50	0300019	

FMS-ZBA / ZBP 50 force-measuring jaws

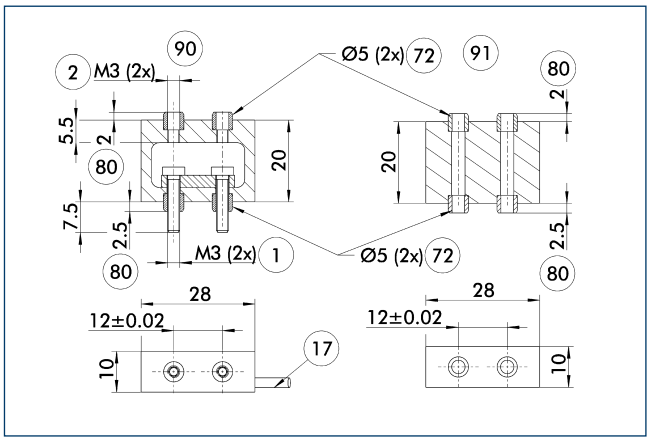

1 Gripper connection
2 Finger connection
17 Cable outlet
72 Fit for centering sleeves
80 Depth of the centering sleeve hole in the mating part
90 Active intermediate jaws
91 Passive intermediate jaws

Force measuring jaws measure gripping forces, but can also determine workpiece weights or dimensional deviations. There are active and passive intermediate jaws (FMS-ZBA or FMS-ZBP). At least one active force measuring jaw is required per gripper, the rest can be passive. For each active jaw, a FMS-A control unit and a FMS-AK connection cable are required.

Description	ID	Often combined
Active intermediate jaws		
FMS-ZBA 50	0301830	
Passive intermediate jaws		
FMS-ZBP 50	0301831	
Connection cables		
FMS-AK0200	0301820	●
FMS-AK0500	0301821	
FMS-AK1000	0301822	
FMS-AK2000	0301823	
Electronic processor		
FMS-A1	0301810	

ABR- / SBR-PGZN-plus 50 finger blanks

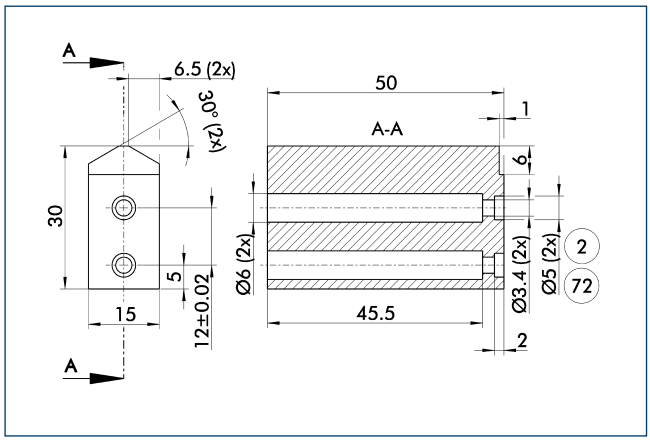

(2) Finger connection (72) Fit for centering sleeves

Finger blanks for customized subsequent machining.

Description	ID	Material	Scope of delivery
Finger blanks			
ABR-PGZN-plus 50	0300009	Aluminum	1
SBR-PGZN-plus 50	0300019	16MnCr5	1

Modular assembly automation

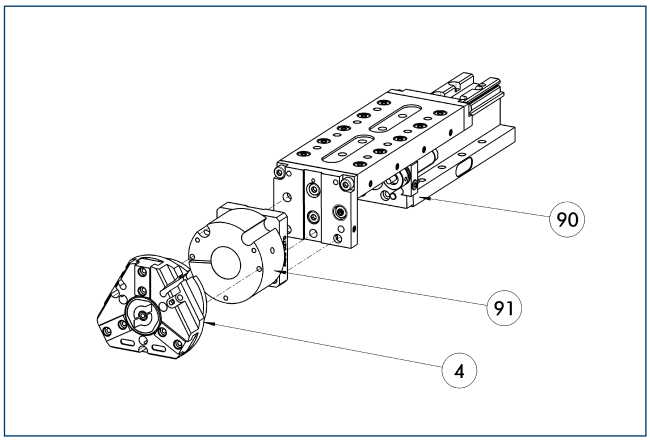

(4) Gripper (91) ASG adapter plate
(90) CLM / KLM / LM / ELM / ELS / HLM linear module

Gripper and linear modules can be combined with standard adapters out of the modular assembly system. For more information see our catalog "Modular Assembly Automation".

MMS electronic magnetic switches

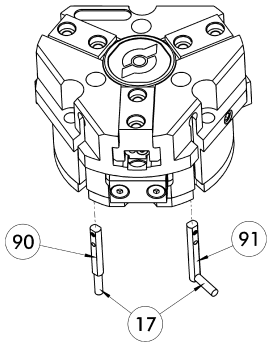

(17) Cable outlet
(91) MMS 22...-SA sensor
(90) MMS 22... sensor

End position monitoring for mounting in the C-slot.

Description	ID	Often combined
MMS electronic magnetic switches		
MMS 22-S-M8-PNP	0301032	●
MMSK 22-S-PNP	0301034	
MMS electronic magnetic switches with lateral cable outlet		
MMS 22-S-M8-PNP-SA	0301042	●
MMSK 22-S-PNP-SA	0301044	
Cable extensions		
KV BW08-SG08 3P-0030-PNP	0301495	
KV BW08-SG08 3P-0100-PNP	0301496	
KV BW08-SG08 3P-0200-PNP	0301497	●
Clip for plug / socket		
CLI-M8	0301463	
Connection cables		
KA BG08-L 3P-0300-PNP	0301622	●
KA BG08-L 3P-0500-PNP	0301623	
KA BW08-L 3P-0300-PNP	0301594	
KA BW08-L 3P-0500-PNP	0301502	
Sensor distributor		
V2-M8	0301775	●
V4-M8	0301746	
V8-M8	0301751	

ⓘ Two sensors (closer/S) are required for each unit, plus extension cables as an option. Please note the minimum permitted bending radii for the sensor cables, which are generally 35 mm.

MMS PI1 programmable magnetic switches

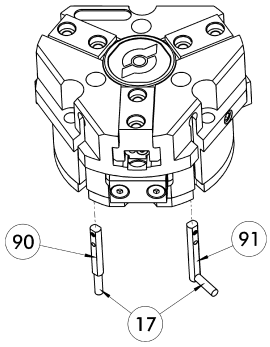

(17) Cable outlet
(91) MMS 22...-PI1-...-SA sensor
(90) MMS 22...-PI1-... sensor

Position query with one programmable position per sensor and electronics integrated in sensor. Programmable via MT magnet teaching tool (included in the scope of delivery) or ST plug teaching tool (optional). Limit position query mounted in C-groove. If the ST plug teaching tools are listed in the table, teaching can only take place with the ST plug teaching tools.

Description	ID	Often combined
Plug teaching tool		
ST-MMS 22-PI1-PNP	0301025	
MMS PI1 programmable magnetic switches		
MMS 22-PI1-S-M8-PNP	0301160	●
MMSK 22-PI1-S-PNP	0301162	
MMS PI1-HD programmable magnetic switches with stainless steel housing		
MMS 22-PI1-S-M8-PNP-HD	0301110	●
MMSK 22-PI1-S-PNP-HD	0301112	
MMS PI1 programmable magnetic switches with lateral cable outlet		
MMS 22-PI1-S-M8-PNP-SA	0301166	●
MMSK 22-PI1-S-PNP-SA	0301168	

ⓘ Two sensors (closer/S) are required for each unit, plus extension cables as an option. Please note the minimum permitted bending radii for the sensor cables, which are generally 35 mm. Connection cable, cable extensions, and sensor distributors can be found in the table for the MMS 22.

MMS PI2 programmable magnetic switches

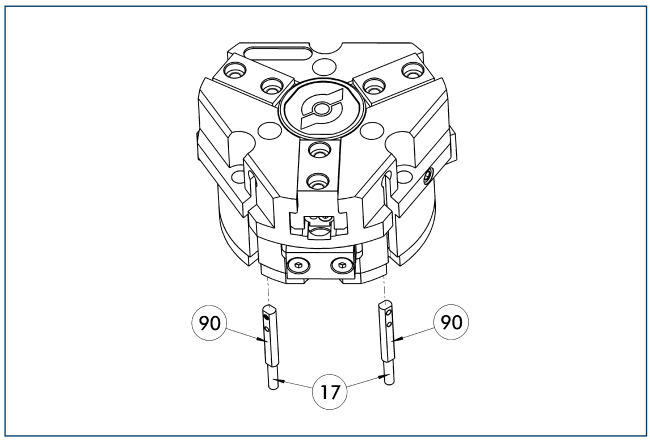

(17) Cable outlet (90) MMS 22...-PI2-... sensor

Position query with two programmable positions per sensor and electronics integrated in sensor. Programmable via MT magnet teaching tool (included in the scope of delivery) or ST plug teaching tool (optional). Limit position query mounted in C-groove. If the ST plug teaching tools are listed in the table, teaching can only take place with the ST plug teaching tools.

Description	ID	Often combined
Plug teaching tool		
ST-MMS 22-PI2-PNP	0301026	
MMS PI2 programmable magnetic switches		
MMS 22-PI2-S-M8-PNP	0301180	●
MMSK 22-PI2-S-PNP	0301182	
MMS PI2-HD programmable magnetic switches with stainless steel housing		
MMS 22-PI2-S-M8-PNP-HD	0301130	●
MMSK 22-PI2-S-PNP-HD	0301132	

ⓘ Per unit one sensor (closer/S) is required, optionally a cable extension. Please note the minimum permitted bending radii for the sensor cables, which are generally 35 mm. Connection cable, cable extensions, and sensor distributors can be found in the table for the MMS-P 22.

MMS-P programmable magnetic switches

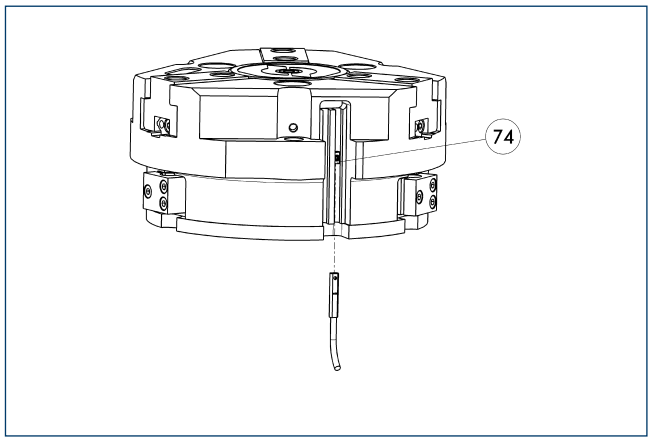

(74) Stop for MMS-P

Position monitoring with two programmable positions per sensor. The end position monitoring is mounted in the C-slot.

Description	ID	Often combined
MMS-P programmable magnetic switches		
MMSK-P 22-S-PNP	0301371	
MMS-P 22-S-M8-PNP	0301370	●
Clip for plug / socket		
CLI-M8	0301463	
Connection cables		
KA BG08-L 4P-0500	0307767	●
KA BG08-L 4P-1000	0307768	
KA BW08-L 4P-0500	0307765	
KA BW08-L 4P-1000	0307766	
Sensor distributor		
V2-M8-4P-2XM8-3P	0301380	

ⓘ Per unit one sensor (closer/S) is required, optionally a cable extension. Please note the minimum permitted bending radii for the sensor cables, which are generally 35 mm.

JGZ 64

SCHUNK Grippers pneumatic | 3-Finger Centric Grippers | Universal Gripper

Gripping force, O.D. gripping

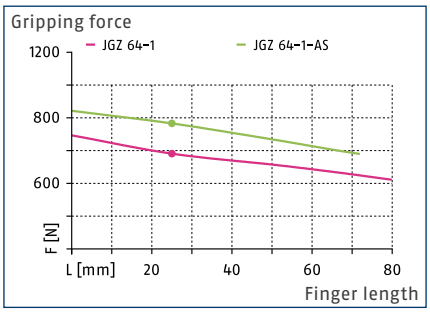

Gripping force, I.D. gripping

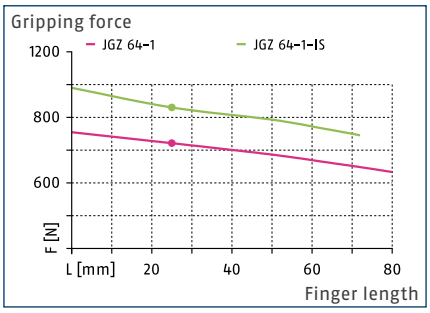

Finger load

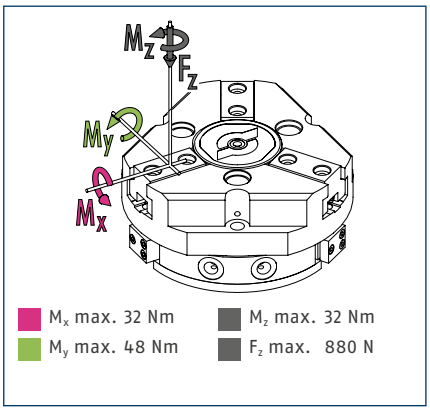

ⓘ The indicated moments and forces are static values, apply per base jaw and may occur simultaneously. M_y may arise in addition to the moment generated by the gripping force itself. If the max. permitted finger weight is exceeded, it is impreative to throttle the air supply so that the jaw movement occurs without any hitting or bouncing. Service life may be reduced.

Technical data

Description		JGZ 64-1	JGZ 64-1-AS	JGZ 64-1-IS
ID		0308920	0308921	0308922
Stroke per jaw	[mm]	6	6	6
Closing- / opening force	[N]	580/640	765/-	-/860
min. spring force	[N]		185	220
Weight	[kg]	0.43	0.54	0.54
Recommended workpiece weight	[kg]	2.9	2.9	2.9
Fluid consumption per double stroke	[cm³]	25	25	25
min. / max. operating pressure	[bar]	2/8	4/6.5	4/6.5
Nominal operating pressure	[bar]	6	6	6
Closing- / opening time	[s]	0.03/0.03	0.02/0.04	0.04/0.02
Closing- / opening time only with spring	[s]		0.08	0.08
max. permitted finger length	[mm]	80	72	72
max. permitted weight per finger	[kg]	0.35	0.35	0.35
IP class		40	40	40
min. / max. ambient temperature	[°C]	5/90	5/90	5/90
Repeat accuracy	[mm]	0.01	0.01	0.01
Cleanroom class ISO 14644-1		5	5	5

Main view

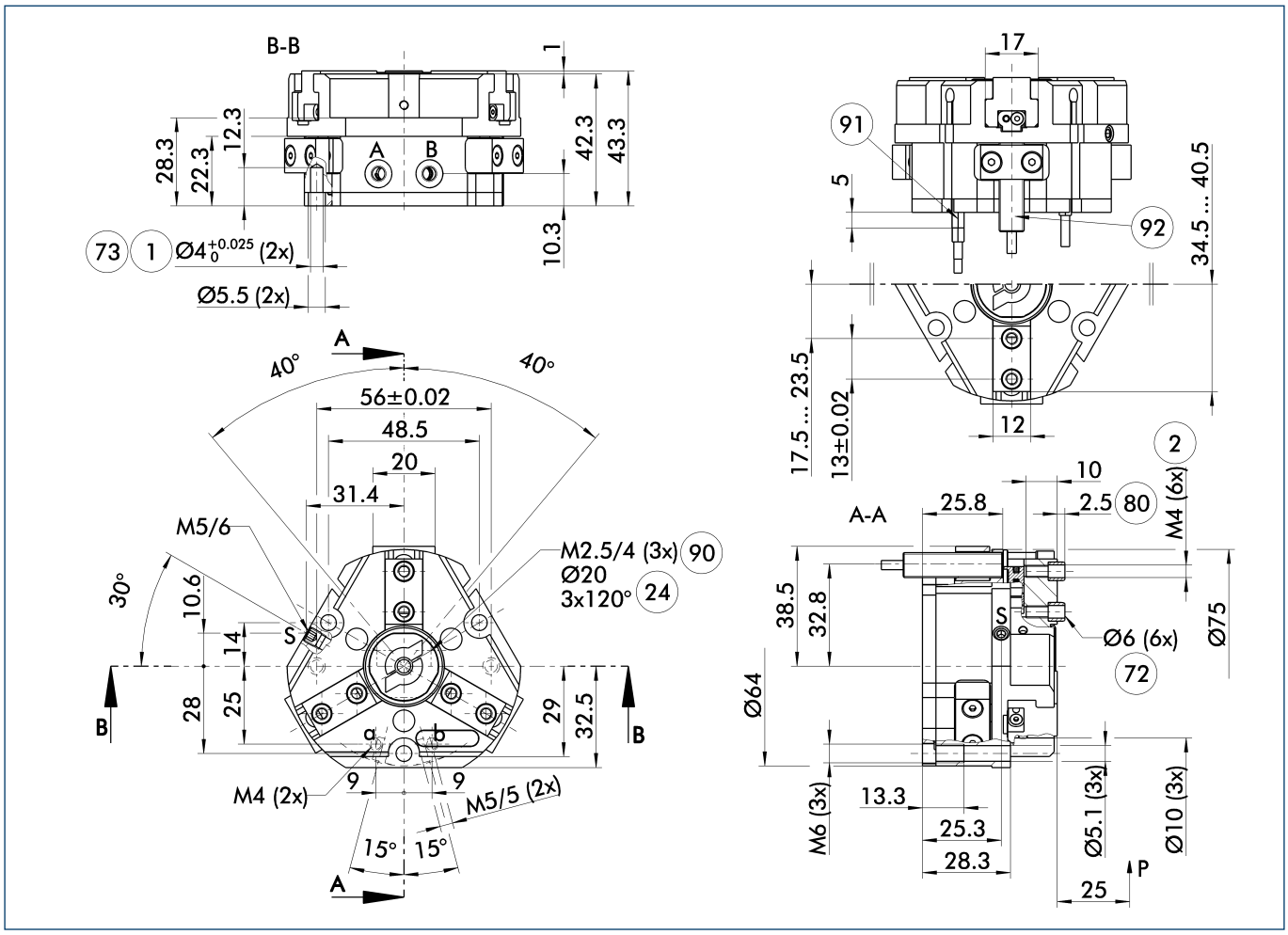

The drawing shows the gripper in the basic version with closed jaws, without dimensional consideration of the options described below.

ⓘ The SDV-P pressure maintenance valve can also be used for I.D. or O.D. gripping alternatively or in addition to the spring-loaded, mechanical gripping force maintenance device (see catalog section on "Accessories").

A, a Main / direct connection, gripper opening

B, b Main / direct connection, gripper closing

S Air purge connection (0.5 ... 1 bar)

(1) Gripper connection

(2) Finger connection

(24) Bolt circle

(72) Fit for centering sleeves

(73) Fit for centering pins

(80) Depth of the centering sleeve hole in the mating part

(90) Thread below the cover for fastening external attachments

(91) MMS 22... sensor

(92) IN ... sensor

Hose-free direct connection M4

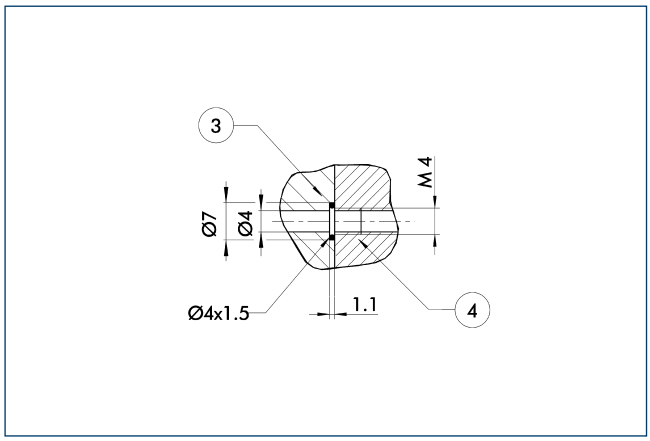

(3) Adapter (4) Gripper

The direct connection is used for supplying compressed air without hoses. Instead, the pressure medium is fed through bore-holes in the mounting plate.

Gripping force maintenance device AS / IS

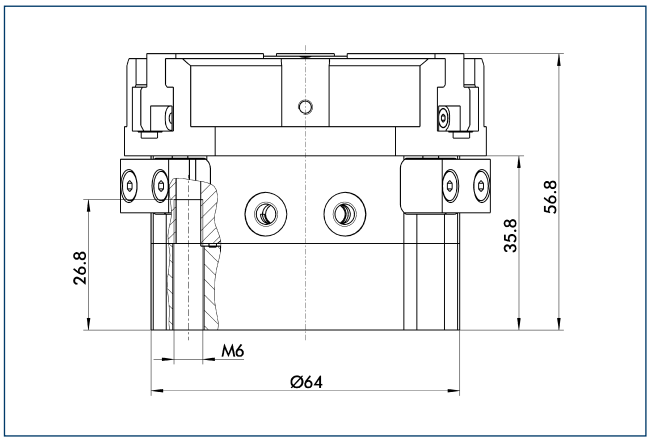

The mechanical maintenance of gripping force also assures a minimum gripping force in the case of a loss of pressure. With the AS / S variant, this acts as a closing force, and as an opening force for the IS variant. The maintenance of gripping force element can also be used as a means for increasing gripping force or for single actuated gripping.

Spring-loaded pressure piece

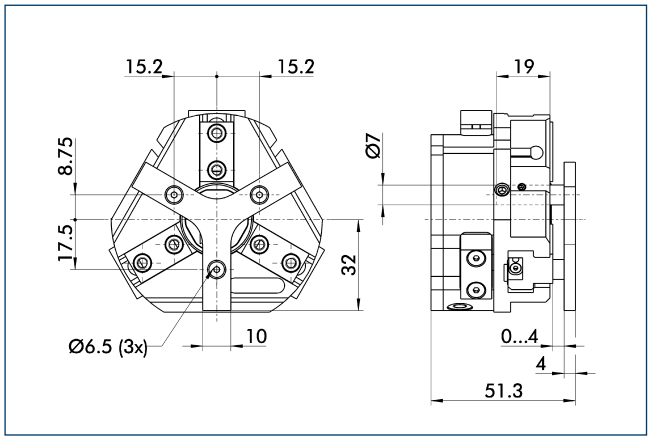

For spring-supported positioning of the workpiece against a stop after the gripper has opened. Especially developed for loading machines.

Description	ID	Stroke [mm]	Min. force [N]
Spring-loaded pressure piece			
A-PZN-plus/DPZ-plus 64	0303720	4	11

SDV-P pressure maintenance valve

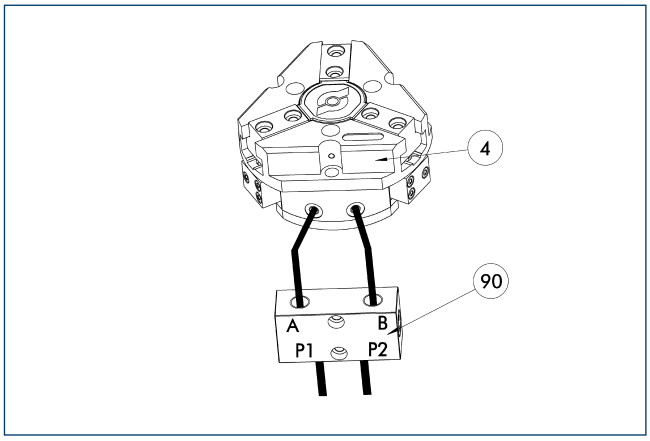

(4) Gripper (90) SDV-P pressure maintenance valve

The SDV-P pressure maintenance valves ensure that the pressure in the piston chamber of pneumatic gripping, rotary, linear, and quick-change modules is maintained temporarily during an emergency stop.

Description	ID	
Pressure maintenance valve		
SDV-P 04	0403130	

BSWS jaw quick-change systems

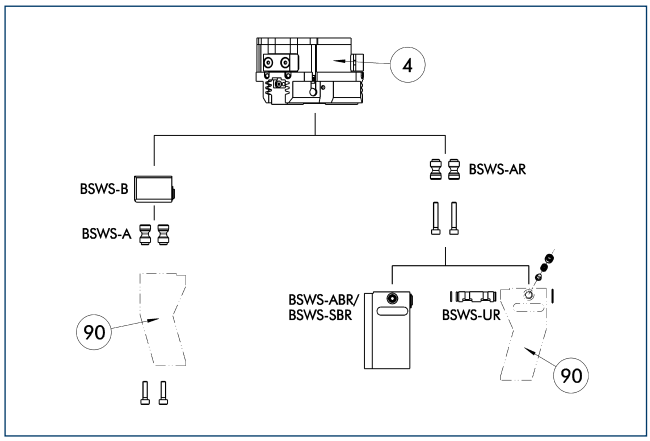

(4) Gripper
(90) Customized gripper fingers

There are various jaw quick-change systems available for the grippers. For detailed information, refer to the appropriate product.

Description	ID	
Jaw quick-change system adapter		
BSWS-AR 64	0300092	
BSWS-A 64	0303022	
Jaw quick-change system base		
BSWS-B 64	0303023	
Finger blanks with jaw quick-change system		
BSWS-ABR-PGZN-plus 64	0300072	
BSWS-SBR-PGZN-plus 64	0300082	
Jaw quick-change system reversed		
BSWS-UR 64	0302991	

ⓘ Only the systems listed in the table can be used.

ZBA L-plus 64 intermediate jaws

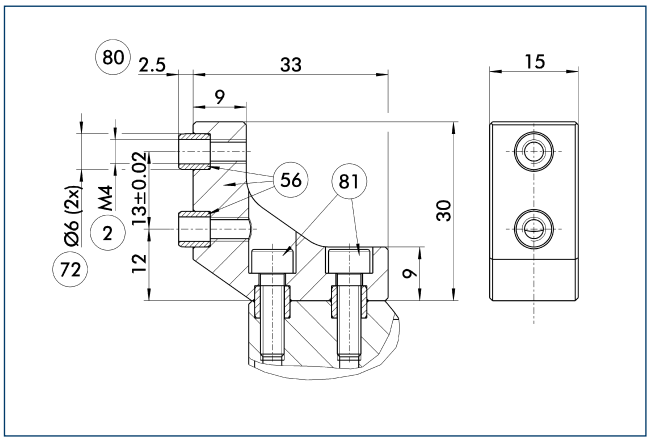

(2) Finger connection
(56) Included in delivery
(72) Fit for centering sleeves
(80) Depth of the centering sleeve hole in the mating part
(81) Not included in the scope of delivery

Optionally intermediate jaws can be used, enabling direct connection and alignment of top jaws and various standard accessories in Z-direction.

Description	ID	Material	Scope of delivery
Intermediate jaws			
ZBA-L-plus 64	0311722	Aluminum	1

UZB 64 universal intermediate jaw

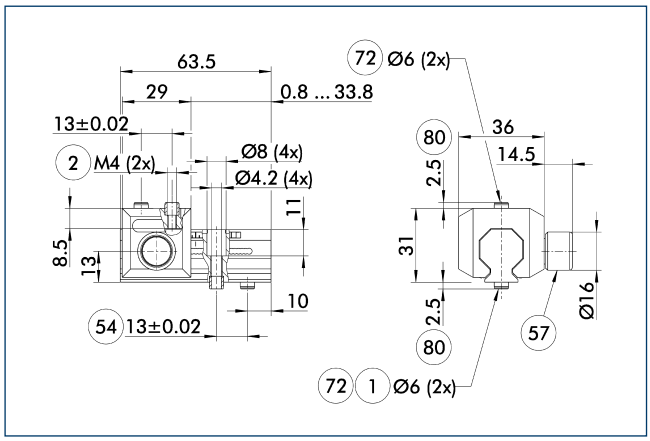

1 Gripper connection
2 Finger connection
54 Optional right or left connection
57 Locking
72 Fit for centering sleeves
80 Depth of the centering sleeve hole in the mating part

The universal intermediate jaw allows fast tool-free and reliable plugging and shifting of top jaws at the gripper.

Description	ID	Grid dimension [mm]
Universal intermediate jaw		
UZB 64	0300042	1.5
Finger blanks		
ABR-PGZN-plus 64	0300010	
SBR-PGZN-plus 64	0300020	

FMS-ZBA / ZBP 64 force-measuring jaws

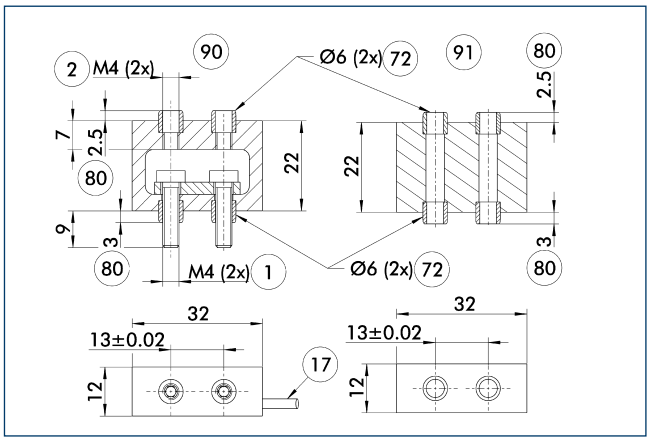

1 Gripper connection
2 Finger connection
17 Cable outlet
72 Fit for centering sleeves
80 Depth of the centering sleeve hole in the mating part
90 Active intermediate jaws
91 Passive intermediate jaws

Force measuring jaws measure gripping forces, but can also determine workpiece weights or dimensional deviations. There are active and passive intermediate jaws (FMS-ZBA or FMS-ZBP). At least one active force measuring jaw is required per gripper, the rest can be passive. For each active jaw, a FMS-A control unit and a FMS-AK connection cable are required.

Description	ID	Often combined
Active intermediate jaws		
FMS-ZBA 64	0301832	
Passive intermediate jaws		
FMS-ZBP 64	0301833	
Connection cables		
FMS-AK0200	0301820	●
FMS-AK0500	0301821	
FMS-AK1000	0301822	
FMS-AK2000	0301823	
Electronic processor		
FMS-A1	0301810	

ABR- / SBR-PGZN-plus 64 finger blanks

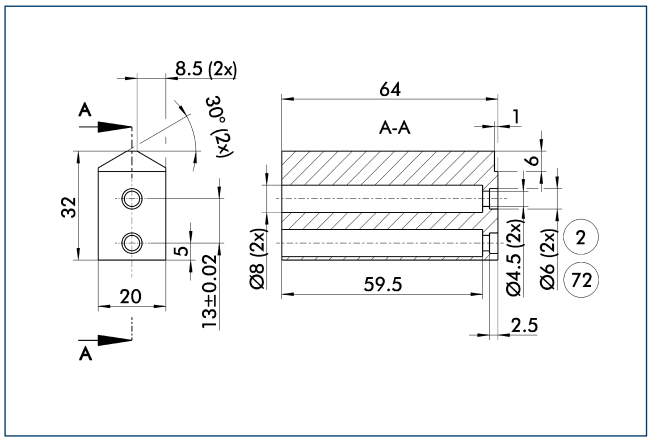

(2) Finger connection (72) Fit for centering sleeves

Finger blanks for customized subsequent machining.

Description	ID	Material	Scope of delivery
Finger blanks			
ABR-PGZN-plus 64	0300010	Aluminum	1
SBR-PGZN-plus 64	0300020	16MnCr5	1

Modular assembly automation

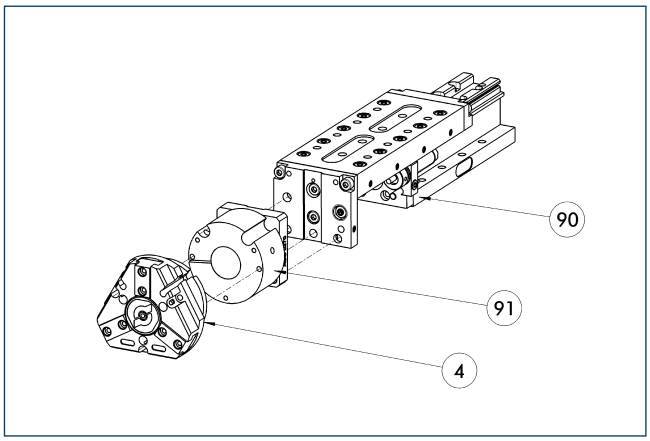

(4) Gripper (91) ASG adapter plate
(90) CLM / KLM / LM / ELM / ELS / HLM linear module

Gripper and linear modules can be combined with standard adapters out of the modular assembly system. For more information see our catalog "Modular Assembly Automation".

Inductive proximity switches

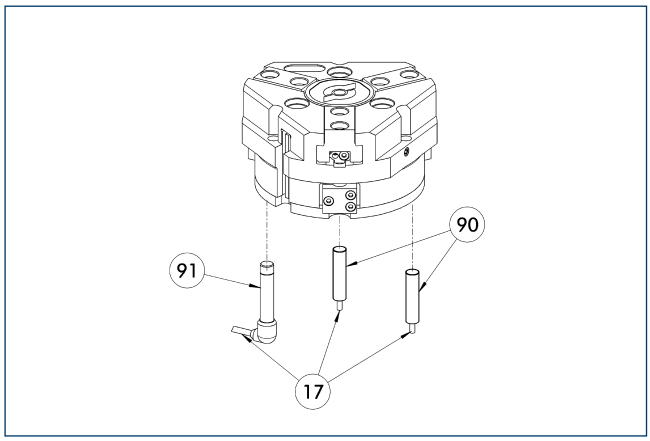

(17) Cable outlet
(90) IN ... sensor
(91) IN ...-SA sensor

Directly mounted limit position monitor.

Description	ID	Often combined
Inductive proximity switches		
IN 80-S-M12	0301578	
IN 80-S-M8	0301478	●
INK 80-S	0301550	
Inductive proximity switches with lateral outlet		
IN 80-S-M12-SA	0301587	
IN 80-S-M8-SA	0301483	●
INK 80-S-SA	0301566	
Cable extensions		
KV BG12-SG12 3P-0030-PNP	0301999	
KV BG12-SG12 3P-0060-PNP	0301998	
KV BW08-SG08 3P-0030-PNP	0301495	
KV BW08-SG08 3P-0100-PNP	0301496	
KV BW08-SG08 3P-0200-PNP	0301497	●
KV BW12-SG12 3P-0030-PNP	0301595	
KV BW12-SG12 3P-0100-PNP	0301596	
KV BW12-SG12 3P-0200-PNP	0301597	
Clip for plug / socket		
CLI-M12	0301464	
CLI-M8	0301463	
Connection cables		
KA BG08-L 3P-0300-PNP	0301622	●
KA BG08-L 3P-0500-PNP	0301623	
KA BG12-L 3P-0500-PNP	30016369	
KA BW08-L 3P-0300-PNP	0301594	
KA BW08-L 3P-0500-PNP	0301502	
KA BW12-L 3P-0300-PNP	0301503	
KA BW12-L 3P-0500-PNP	0301507	
Sensor distributor		
V2-M8	0301775	●
V2-M12	0301776	●
V4-M12	0301747	
V4-M8	0301746	

ⓘ Two sensors (closer/S) are required for each unit, plus extension cables as an option. Please note the minimum permitted bending radii for the sensor cables, which are generally 35 mm.

Flexible position sensor

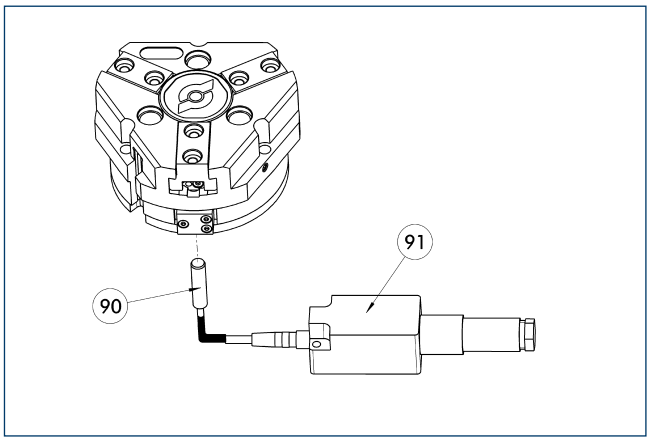

(90) FPS-S sensor
(91) FPS-F5 / -F5 T electronic processor

Flexible position monitoring of up to five positions.

Description	ID	Often combined
Mounting kit for FPS		
AS-FPS-PGZN-plus 64-1/80-2	0301630	
Electronic processor		
FPS-F5	0301805	●
FPS-F5 T	0301807	
Sensor		
FPS-S M8	0301704	
Clip for plug / socket		
CLI-M8	0301463	

ⓘ When using a FPS system, a FPS sensor (FPS-S) and a control unit (FPS-F5 / F5 T) are required for each gripper as well as a mounting kit (AS), if listed. Cable extensions (KV) are available as options in the "Accessories" catalog section.

MMS electronic magnetic switches

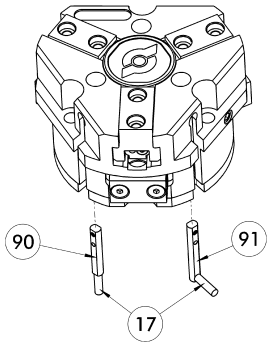

(17) Cable outlet
(91) MMS 22...-SA sensor
(90) MMS 22... sensor

End position monitoring for mounting in the C-slot.

Description	ID	Often combined
MMS electronic magnetic switches		
MMS 22-S-M8-PNP	0301032	●
MMSK 22-S-PNP	0301034	
MMS electronic magnetic switches with lateral cable outlet		
MMS 22-S-M8-PNP-SA	0301042	●
MMSK 22-S-PNP-SA	0301044	
Cable extensions		
KV BW08-SG08 3P-0030-PNP	0301495	
KV BW08-SG08 3P-0100-PNP	0301496	
KV BW08-SG08 3P-0200-PNP	0301497	●
Clip for plug / socket		
CLI-M8	0301463	
Connection cables		
KA BG08-L 3P-0300-PNP	0301622	●
KA BG08-L 3P-0500-PNP	0301623	
KA BW08-L 3P-0300-PNP	0301594	
KA BW08-L 3P-0500-PNP	0301502	
Sensor distributor		
V2-M8	0301775	●
V4-M8	0301746	
V8-M8	0301751	

ⓘ Two sensors (closer/S) are required for each unit, plus extension cables as an option. Please note the minimum permitted bending radii for the sensor cables, which are generally 35 mm.

MMS PI1 programmable magnetic switches

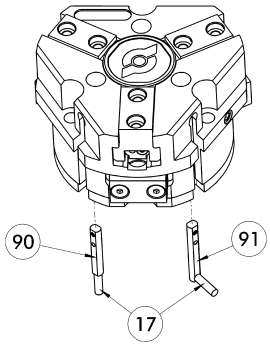

(17) Cable outlet
(91) MMS 22...-PI1-...-SA sensor
(90) MMS 22...-PI1-... sensor

Position query with one programmable position per sensor and electronics integrated in sensor. Programmable via MT magnet teaching tool (included in the scope of delivery) or ST plug teaching tool (optional). Limit position query mounted in C-groove. If the ST plug teaching tools are listed in the table, teaching can only take place with the ST plug teaching tools.

Description	ID	Often combined
Plug teaching tool		
ST-MMS 22-PI1-PNP	0301025	
MMS PI1 programmable magnetic switches		
MMS 22-PI1-S-M8-PNP	0301160	●
MMSK 22-PI1-S-PNP	0301162	
MMS PI1-HD programmable magnetic switches with stainless steel housing		
MMS 22-PI1-S-M8-PNP-HD	0301110	●
MMSK 22-PI1-S-PNP-HD	0301112	
MMS PI1 programmable magnetic switches with lateral cable outlet		
MMS 22-PI1-S-M8-PNP-SA	0301166	●
MMSK 22-PI1-S-PNP-SA	0301168	

ⓘ Two sensors (closer/S) are required for each unit, plus extension cables as an option. Please note the minimum permitted bending radii for the sensor cables, which are generally 35 mm. Connection cable, cable extensions, and sensor distributors can be found in the table for the MMS 22.

MMS PI2 programmable magnetic switches

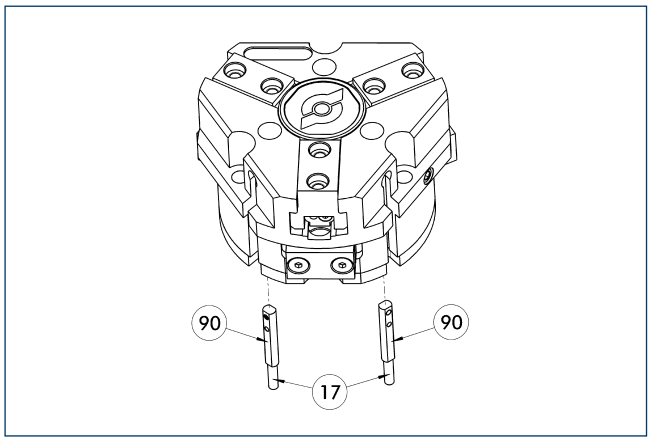

(17) Cable outlet (90) MMS 22...-PI2-... sensor

Position query with two programmable positions per sensor and electronics integrated in sensor. Programmable via MT magnet teaching tool (included in the scope of delivery) or ST plug teaching tool (optional). Limit position query mounted in C-groove. If the ST plug teaching tools are listed in the table, teaching can only take place with the ST plug teaching tools.

Description	ID	Often combined
Plug teaching tool		
ST-MMS 22-PI2-PNP	0301026	
MMS PI2 programmable magnetic switches		
MMS 22-PI2-S-M8-PNP	0301180	●
MMSK 22-PI2-S-PNP	0301182	
MMS PI2-HD programmable magnetic switches with stainless steel housing		
MMS 22-PI2-S-M8-PNP-HD	0301130	●
MMSK 22-PI2-S-PNP-HD	0301132	

ⓘ Per unit one sensor (closer/S) is required, optionally a cable extension. Please note the minimum permitted bending radii for the sensor cables, which are generally 35 mm. Connection cable, cable extensions, and sensor distributors can be found in the table for the MMS-P 22.

MMS-P programmable magnetic switches

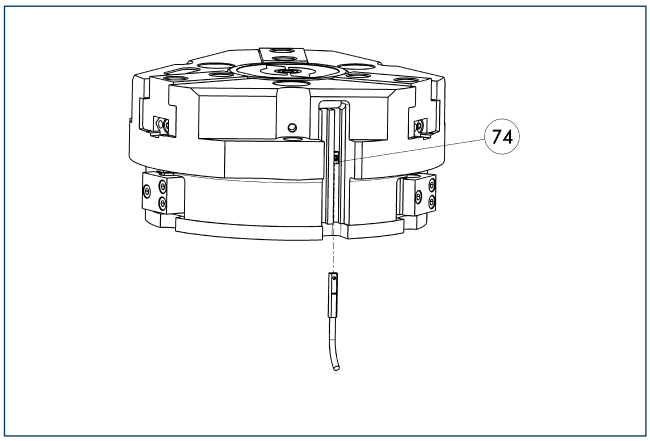

(74) Stop for MMS-P

Position monitoring with two programmable positions per sensor. The end position monitoring is mounted in the C-slot.

Description	ID	Often combined
MMS-P programmable magnetic switches		
MMSK-P 22-S-PNP	0301371	
MMS-P 22-S-M8-PNP	0301370	●
Clip for plug / socket		
CLI-M8	0301463	
Connection cables		
KA BG08-L 4P-0500	0307767	●
KA BG08-L 4P-1000	0307768	
KA BW08-L 4P-0500	0307765	
KA BW08-L 4P-1000	0307766	
Sensor distributor		
V2-M8-4P-2XM8-3P	0301380	

ⓘ Per unit one sensor (closer/S) is required, optionally a cable extension. Please note the minimum permitted bending radii for the sensor cables, which are generally 35 mm.

APS-Z80 analog position sensor

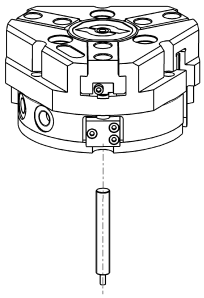

Contactlessly measuring, analog multi-position monitoring for any number of positions.

Description	ID	Often combined
Mounting kit for APS-Z80		
AS-APS-Z80-PGZN-plus 64-1	0302105	
Sensor		
APS-Z80-K	0302072	
APS-Z80-M8	0302070	●

ⓘ When using an APS system, one mounting kit (AS-APS-Z80) and one APS-Z80 sensor is required per gripper.

APS-M1 analog position sensor

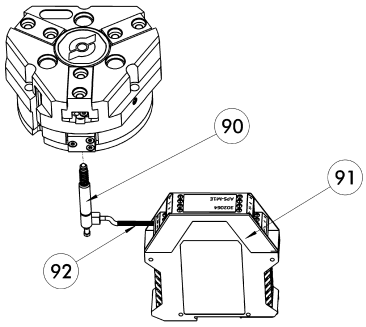

(90) APS-M1S sensor
(91) APS-M1E electronic processor
(92) APS-K extension cable

Analog multi position monitoring for any desired positions.

Description	ID	Often combined
Mounting kit for APS-M1		
AS-APS-M1-PGZN-plus 64-1	0302075	
Connection cables		
APS-K0200	0302066	●
APS-K0700	0302068	
Electronic processor		
APS-M1E	0302064	
Sensor		
APS-M1S	0302062	

ⓘ When using an APS system, for each gripper a mounting kit (AS-APS-M1), an APS-M1S sensor (incl. 3 m cable) as well as an electronics (APS-M1e) are required. An extension cable (APS-K) can be connected between the sensor and the electronics as an option. The max. cable length between the sensor and the electronics is 10 m, between the electronics and their control unit (PLC) it is max. 1 m.

Cylindrical reed switches

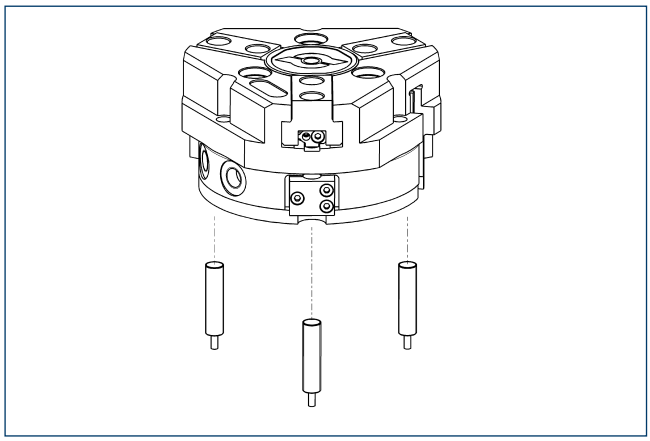

Limit position monitor can be mounted with mounting kit.

Description	ID	
Mounting kit for proximity switch		
AS-RMS 80 PGN/PZN-plus 64/80	0377725	
Reed switches		
RMS 80-S-M8	0377721	

ⓘ Two sensors (closer/S) are required for each unit, plus extension cables as an option. This mounting kit needs to be ordered optionally as an accessory. Two mounting kits are required per gripper. Please note the minimum permitted bending radii for the sensor cables, which are generally 35 mm.

JGZ 80

SCHUNK Grippers pneumatic | 3-Finger Centric Grippers | Universal Gripper

Gripping force, O.D. gripping

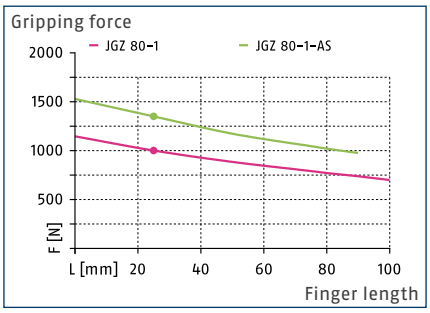

Gripping force, I.D. gripping

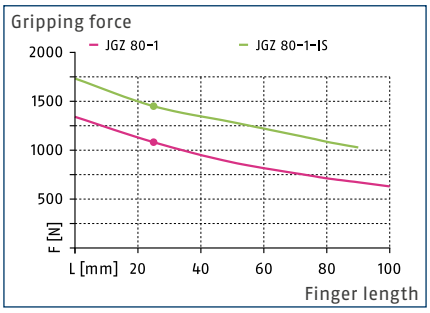

Finger load

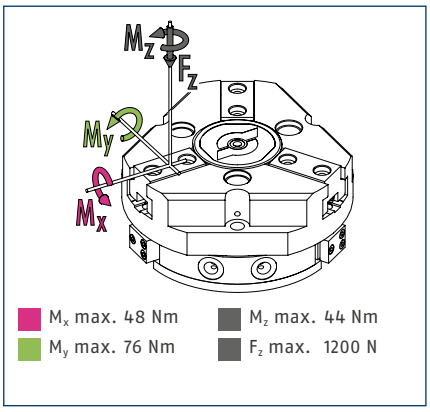

ⓘ The indicated moments and forces are static values, apply per base jaw and may occur simultaneously. M_y may arise in addition to the moment generated by the gripping force itself. If the max. permitted finger weight is exceeded, it is impreative to throttle the air supply so that the jaw movement occurs without any hitting or bouncing. Service life may be reduced.

Technical data

Description		JGZ 80-1	JGZ 80-1-AS	JGZ 80-1-IS
ID		0308930	0308931	0308932
Stroke per jaw	[mm]	8	8	8
Closing- / opening force	[N]	1000/1080	1350/-	-/1450
min. spring force	[N]		350	370
Weight	[kg]	0.79	0.96	0.96
Recommended workpiece weight	[kg]	5	5	5
Fluid consumption per double stroke	[cm³]	60	60	60
min. / max. operating pressure	[bar]	2/8	4/6.5	4/6.5
Nominal operating pressure	[bar]	6	6	6
Closing- / opening time	[s]	0.05/0.05	0.03/0.05	0.06/0.04
Closing- / opening time only with spring	[s]		0.19	0.19
max. permitted finger length	[mm]	100	90	90
max. permitted weight per finger	[kg]	0.6	0.6	0.6
IP class		40	40	40
min. / max. ambient temperature	[°C]	5/90	5/90	5/90
Repeat accuracy	[mm]	0.01	0.01	0.01
Cleanroom class ISO 14644-1		5	5	5

Main view

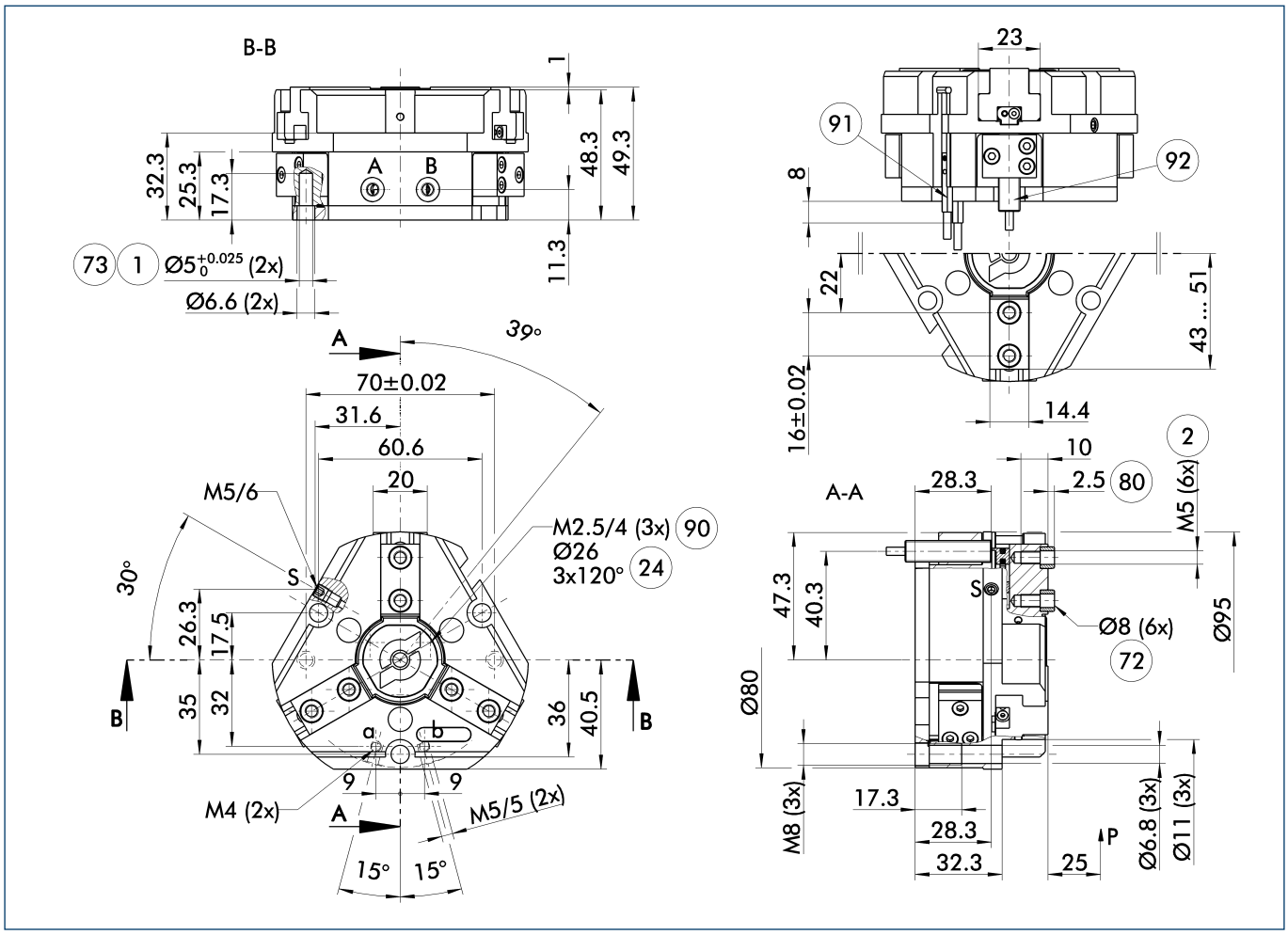

The drawing shows the gripper in the basic version with closed jaws, without dimensional consideration of the options described below.

ⓘ The SDV-P pressure maintenance valve can also be used for I.D. or O.D. gripping alternatively or in addition to the spring-loaded, mechanical gripping force maintenance device (see catalog section on "Accessories").

A, a Main / direct connection, gripper opening

B, b Main / direct connection, gripper closing

S Air purge connection (0.5 ... 1 bar)

(1) Gripper connection

(2) Finger connection

(24) Bolt circle

(72) Fit for centering sleeves

(73) Fit for centering pins

(80) Depth of the centering sleeve hole in the mating part

(90) Thread below the cover for fastening external attachments

(91) MMS 22... sensor

(92) IN ... sensor

Hose-free direct connection M4

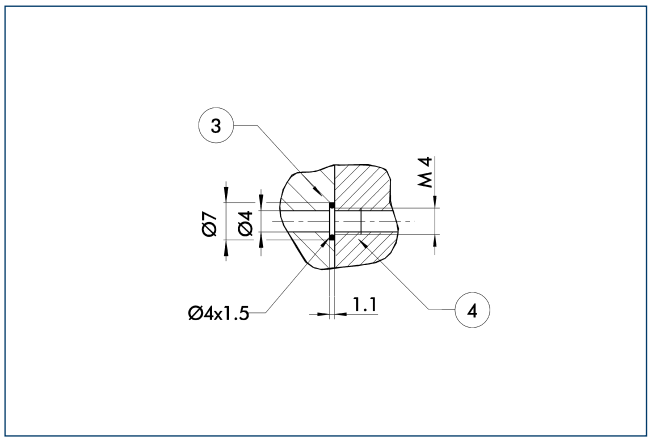

3 Adapter

4 Gripper

The direct connection is used for supplying compressed air without hoses. Instead, the pressure medium is fed through bore-holes in the mounting plate.

Gripping force maintenance device AS / IS

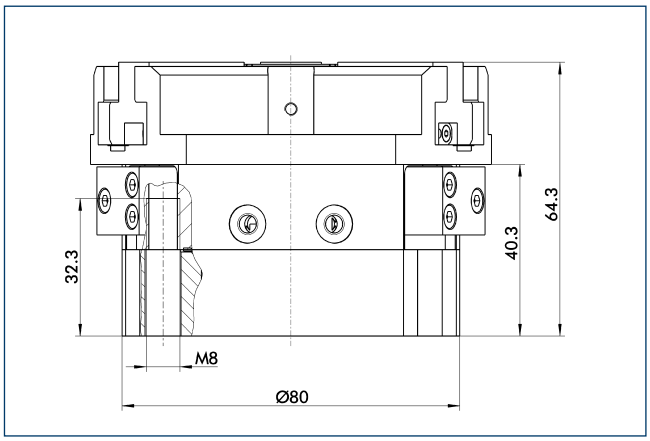

The mechanical maintenance of gripping force also assures a minimum gripping force in the case of a loss of pressure. With the AS / S variant, this acts as a closing force, and as an opening force for the IS variant. The maintenance of gripping force element can also be used as a means for increasing gripping force or for single actuated gripping.

Spring-loaded pressure piece

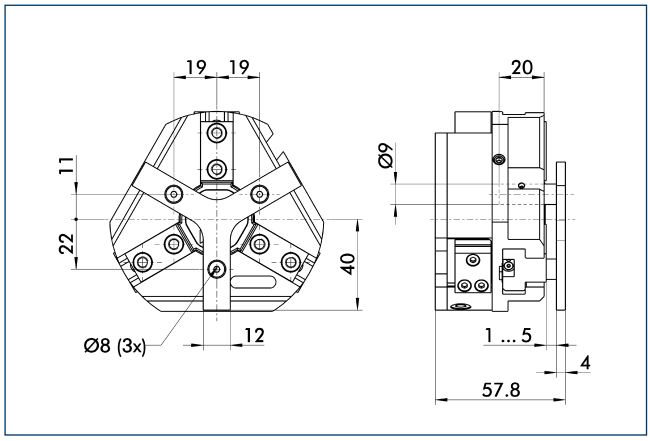

For spring-supported positioning of the workpiece against a stop after the gripper has opened. Especially developed for loading machines.

Description	ID	Stroke [mm]	Min. force [N]
Spring-loaded pressure piece			
A-PZN-plus/DPZ-plus 80	0303721	4	18

SDV-P pressure maintenance valve

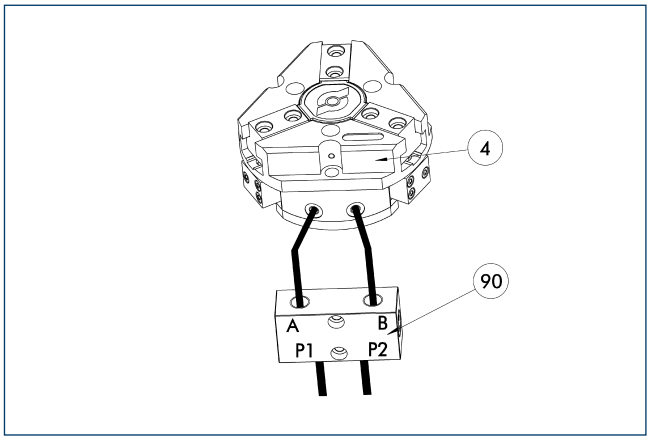

4 Gripper

90 SDV-P pressure maintenance valve

The SDV-P pressure maintenance valves ensure that the pressure in the piston chamber of pneumatic gripping, rotary, linear, and quick-change modules is maintained temporarily during an emergency stop.

Description	ID	
Pressure maintenance valve		
SDV-P 04	0403130	

BSWS jaw quick-change systems

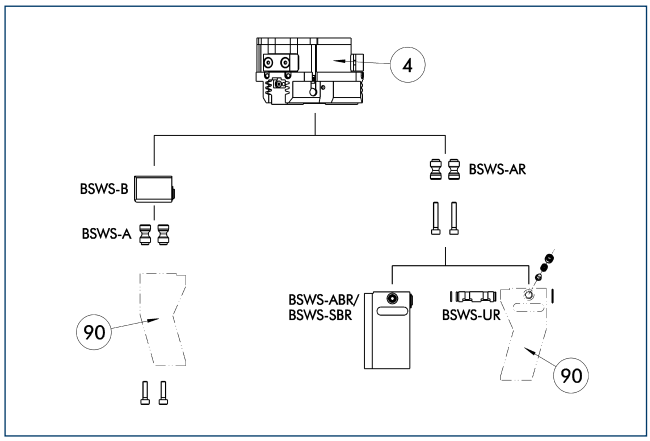

(4) Gripper
(90) Customized gripper fingers

There are various jaw quick-change systems available for the grippers. For detailed information, refer to the appropriate product.

Description	ID	
Jaw quick-change system adapter		
BSWS-AR 80	0300093	
BSWS-A 80	0303024	
Jaw quick-change system base		
BSWS-B 80	0303025	
Finger blanks with jaw quick-change system		
BSWS-ABR-PGZN-plus 80	0300073	
BSWS-SBR-PGZN-plus 80	0300083	
Jaw quick-change system reversed		
BSWS-UR 80	0302992	

ⓘ Only the systems listed in the table can be used.

ZBA L-plus 80 intermediate jaws

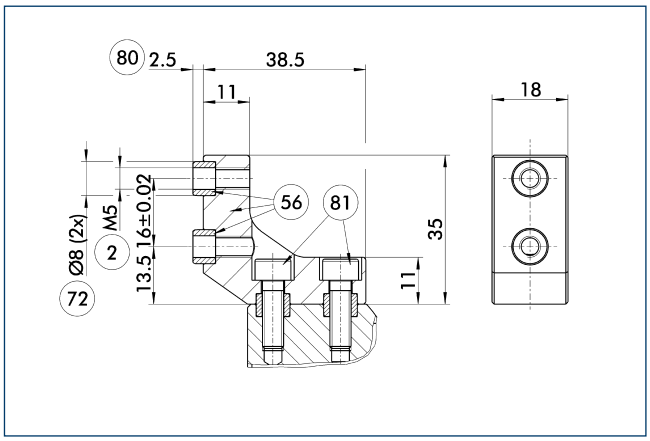

(2) Finger connection
(56) Included in delivery
(72) Fit for centering sleeves
(80) Depth of the centering sleeve hole in the mating part
(81) Not included in the scope of delivery

Optionally intermediate jaws can be used, enabling direct connection and alignment of top jaws and various standard accessories in Z-direction.

Description	ID	Material	Scope of delivery
Intermediate jaws			
ZBA-L-plus 80	0311732	Aluminum	1

UZB 80 universal intermediate jaw

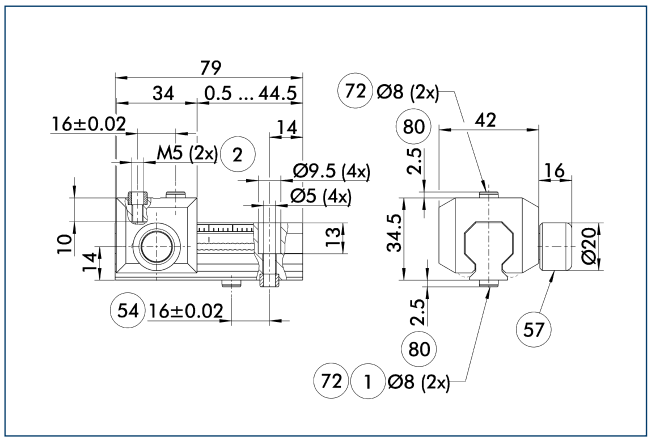

1 Gripper connection
2 Finger connection
54 Optional right or left connection
57 Locking
72 Fit for centering sleeves
80 Depth of the centering sleeve hole in the mating part

The universal intermediate jaw allows fast tool-free and reliable plugging and shifting of top jaws at the gripper.

Description	ID	Grid dimension [mm]
Universal intermediate jaw		
UZB 80	0300043	2
UZB-S 80	5518271	2
Finger blanks		
ABR-PGZN-plus 80	0300011	
SBR-PGZN-plus 80	0300021	

FMS-ZBA / ZBP 80 force-measuring jaws

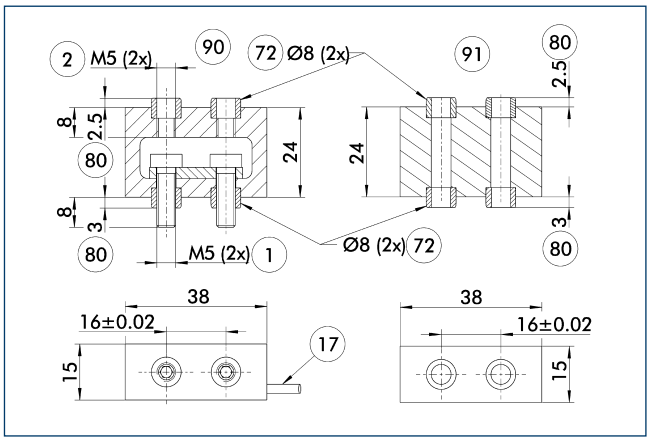

1 Gripper connection
2 Finger connection
17 Cable outlet
72 Fit for centering sleeves
80 Depth of the centering sleeve hole in the mating part
90 Active intermediate jaws
91 Passive intermediate jaws

Force measuring jaws measure gripping forces, but can also determine workpiece weights or dimensional deviations. There are active and passive intermediate jaws (FMS-ZBA or FMS-ZBP). At least one active force measuring jaw is required per gripper, the rest can be passive. For each active jaw, a FMS-A control unit and a FMS-AK connection cable are required.

Description	ID	Often combined
Active intermediate jaws		
FMS-ZBA 80	0301834	
Passive intermediate jaws		
FMS-ZBP 80	0301835	
Connection cables		
FMS-AK0200	0301820	●
FMS-AK0500	0301821	
FMS-AK1000	0301822	
FMS-AK2000	0301823	
Electronic processor		
FMS-A1	0301810	

ABR- / SBR-PGZN-plus 80 finger blanks

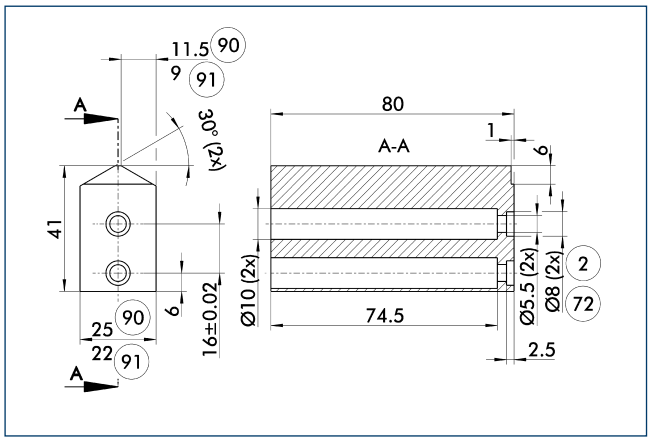

(2) Finger connection
(72) Fit for centering sleeves
(90) ABR-PGZN-plus
(91) SBR-PGZN-plus

Finger blanks for customized subsequent machining.

Description	ID	Material	Scope of delivery
Finger blanks			
ABR-PGZN-plus 80	0300011	Aluminum	1
SBR-PGZN-plus 80	0300021	16MnCr5	1

Modular assembly automation

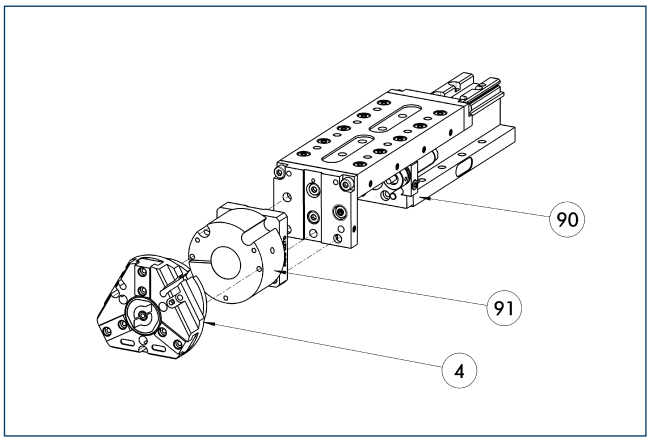

(4) Gripper
(90) CLM / KLM / LM / ELM / ELS / HLM linear module
(91) ASG adapter plate

Gripper and linear modules can be combined with standard adapters out of the modular assembly system. For more information see our catalog "Modular Assembly Automation".

Inductive proximity switches

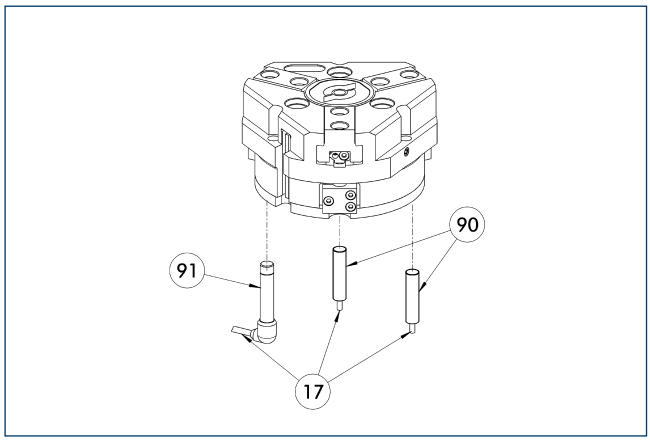

(17) Cable outlet
(90) IN ... sensor
(91) IN ...-SA sensor

Directly mounted limit position monitor.

Description	ID	Often combined
Inductive proximity switches		
IN 80-S-M12	0301578	
IN 80-S-M8	0301478	●
INK 80-S	0301550	
Inductive proximity switches with lateral outlet		
IN 80-S-M12-SA	0301587	
IN 80-S-M8-SA	0301483	●
INK 80-S-SA	0301566	
Cable extensions		
KV BG12-SG12 3P-0030-PNP	0301999	
KV BG12-SG12 3P-0060-PNP	0301998	
KV BW08-SG08 3P-0030-PNP	0301495	
KV BW08-SG08 3P-0100-PNP	0301496	
KV BW08-SG08 3P-0200-PNP	0301497	●
KV BW12-SG12 3P-0030-PNP	0301595	
KV BW12-SG12 3P-0100-PNP	0301596	
KV BW12-SG12 3P-0200-PNP	0301597	
Clip for plug / socket		
CLI-M12	0301464	
CLI-M8	0301463	
Connection cables		
KA BG08-L 3P-0300-PNP	0301622	●
KA BG08-L 3P-0500-PNP	0301623	
KA BG12-L 3P-0500-PNP	30016369	
KA BW08-L 3P-0300-PNP	0301594	
KA BW08-L 3P-0500-PNP	0301502	
KA BW12-L 3P-0300-PNP	0301503	
KA BW12-L 3P-0500-PNP	0301507	
Sensor distributor		
V2-M8	0301775	●
V2-M12	0301776	●
V4-M12	0301747	
V4-M8	0301746	

ⓘ Two sensors (closer/S) are required for each unit, plus extension cables as an option. Please note the minimum permitted bending radii for the sensor cables, which are generally 35 mm.

Flexible position sensor

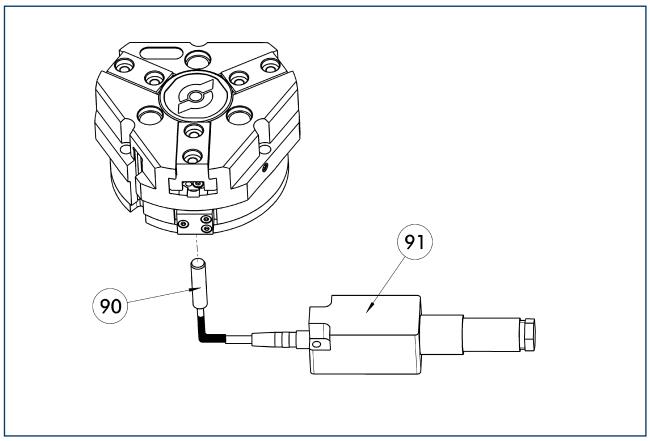

(90) FPS-S sensor
(91) FPS-F5 / -F5 T electronic processor

Flexible position monitoring of up to five positions.

Description	ID	Often combined
Mounting kit for FPS		
AS-FPS-PGZN-plus 80-1/PZB 80/PZB 100	0301632	
Electronic processor		
FPS-F5	0301805	●
FPS-F5 T	0301807	
Sensor		
FPS-S M8	0301704	
Clip for plug / socket		
CLI-M8	0301463	

ⓘ When using a FPS system, a FPS sensor (FPS-S) and a control unit (FPS-F5 / F5 T) are required for each gripper as well as a mounting kit (AS), if listed. Cable extensions (KV) are available as options in the "Accessories" catalog section.

MMS electronic magnetic switches

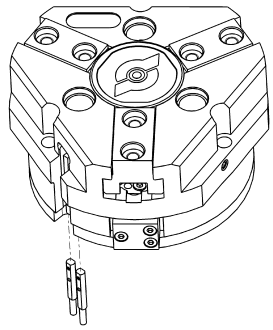

End position monitoring for mounting in the C-slot.

Description	ID	Often combined
MMS electronic magnetic switches		
MMS 22-S-M8-PNP	0301032	●
MMSK 22-S-PNP	0301034	
MMS electronic magnetic switches with lateral cable outlet		
MMS 22-S-M8-PNP-SA	0301042	●
MMSK 22-S-PNP-SA	0301044	
Reed switches		
RMS 22-S-M8	0377720	●
Cable extensions		
KV BW08-SG08 3P-0030-PNP	0301495	
KV BW08-SG08 3P-0100-PNP	0301496	
KV BW08-SG08 3P-0200-PNP	0301497	●
Clip for plug / socket		
CLI-M8	0301463	
Connection cables		
KA BG08-L 3P-0300-PNP	0301622	●
KA BG08-L 3P-0500-PNP	0301623	
KA BW08-L 3P-0300-PNP	0301594	
KA BW08-L 3P-0500-PNP	0301502	
RSS radio sensor system		
RSS-T2	0377710	
Sensor distributor		
V2-M8	0301775	●
V4-M8	0301746	
V8-M8	0301751	

ⓘ Two sensors (closer/S) are required for each unit, plus extension cables as an option. Please note the minimum permitted bending radii for the sensor cables, which are generally 35 mm.

MMS PI1 programmable magnetic switches

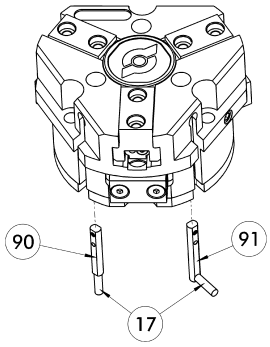

(17) Cable outlet
(90) MMS 22...-PI1-... sensor
(91) MMS 22...-PI1-...-SA sensor

Position query with one programmable position per sensor and electronics integrated in sensor. Programmable via MT magnet teaching tool (included in the scope of delivery) or ST plug teaching tool (optional). Limit position query mounted in C-groove. If the ST plug teaching tools are listed in the table, teaching can only take place with the ST plug teaching tools.

Description	ID	Often combined
MMS PI1 programmable magnetic switches		
MMS 22-PI1-S-M8-PNP	0301160	●
MMSK 22-PI1-S-PNP	0301162	
MMS PI1-HD programmable magnetic switches with stainless steel housing		
MMS 22-PI1-S-M8-PNP-HD	0301110	●
MMSK 22-PI1-S-PNP-HD	0301112	
MMS PI1 programmable magnetic switches with lateral cable outlet		
MMS 22-PI1-S-M8-PNP-SA	0301166	●
MMSK 22-PI1-S-PNP-SA	0301168	

ⓘ Two sensors (closer/S) are required for each unit, plus extension cables as an option. Please note the minimum permitted bending radii for the sensor cables, which are generally 35 mm. Connection cable, cable extensions, and sensor distributors can be found in the table for the MMS 22.

MMS PI2 programmable magnetic switches

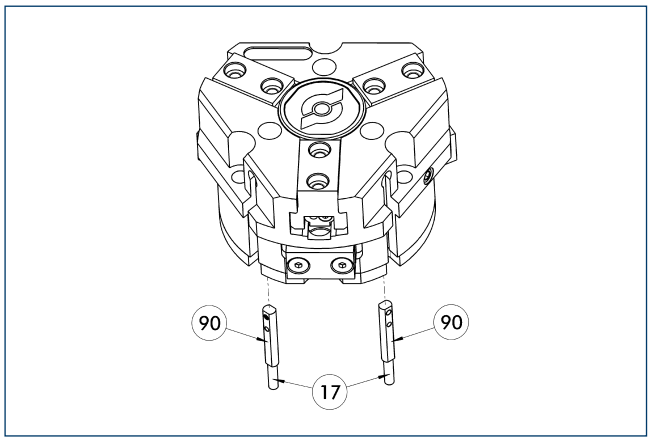

(17) Cable outlet (90) MMS 22...-PI2-... sensor

Position query with two programmable positions per sensor and electronics integrated in sensor. Programmable via MT magnet teaching tool (included in the scope of delivery) or ST plug teaching tool (optional). Limit position query mounted in C-groove. If the ST plug teaching tools are listed in the table, teaching can only take place with the ST plug teaching tools.

Description	ID	Often combined
MMS PI2 programmable magnetic switches		
MMS 22-PI2-S-M8-PNP	0301180	●
MMSK 22-PI2-S-PNP	0301182	
MMS PI2-HD programmable magnetic switches with stainless steel housing		
MMS 22-PI2-S-M8-PNP-HD	0301130	●
MMSK 22-PI2-S-PNP-HD	0301132	

ⓘ Per unit one sensor (closer/S) is required, optionally a cable extension. Please note the minimum permitted bending radii for the sensor cables, which are generally 35 mm. Connection cable, cable extensions, and sensor distributors can be found in the table for the MMS-P 22.

MMS-P programmable magnetic switches

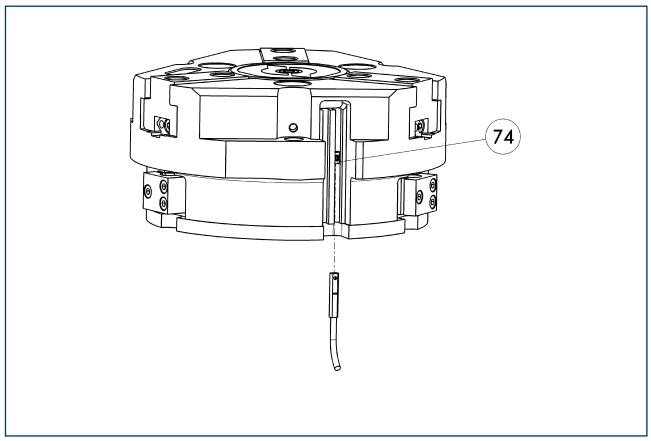

(74) Stop for MMS-P

Position monitoring with two programmable positions per sensor. The end position monitoring is mounted in the C-slot.

Description	ID	Often combined
MMS-P programmable magnetic switches		
MMSK-P 22-S-PNP	0301371	
MMS-P 22-S-M8-PNP	0301370	●
Clip for plug / socket		
CLI-M8	0301463	
Connection cables		
KA BG08-L 4P-0500	0307767	●
KA BG08-L 4P-1000	0307768	
KA BW08-L 4P-0500	0307765	
KA BW08-L 4P-1000	0307766	
Sensor distributor		
V2-M8-4P-2XM8-3P	0301380	

ⓘ Per unit one sensor (closer/S) is required, optionally a cable extension. Please note the minimum permitted bending radii for the sensor cables, which are generally 35 mm.

APS-Z80 analog position sensor

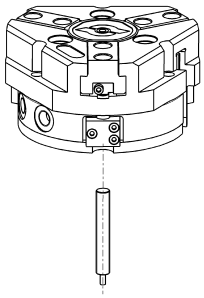

Contactlessly measuring, analog multi-position monitoring for any number of positions.

Description	ID	Often combined
Mounting kit for APS-Z80		
AS-APS-Z80-PGZN-plus 80-1	0302107	
Sensor		
APS-Z80-K	0302072	
APS-Z80-M8	0302070	●

ⓘ When using an APS system, one mounting kit (AS-APS-Z80) and one APS-Z80 sensor is required per gripper.

APS-M1 analog position sensor

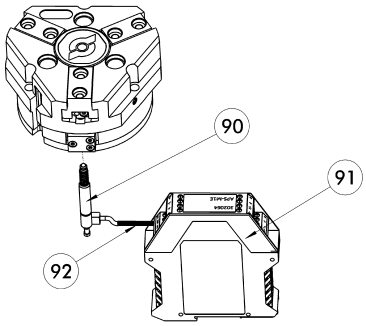

(90) APS-M1S sensor
(91) APS-M1E electronic processor
(92) APS-K extension cable

Analog multi position monitoring for any desired positions.

Description	ID	Often combined
Mounting kit for APS-M1		
AS-APS-M1-PGZN-plus 80-1	0302077	
Connection cables		
APS-K0200	0302066	●
APS-K0700	0302068	
Electronic processor		
APS-M1E	0302064	
Sensor		
APS-M1S	0302062	

ⓘ When using an APS system, for each gripper a mounting kit (AS-APS-M1), an APS-M1S sensor (incl. 3 m cable) as well as an electronics (APS-M1e) are required. An extension cable (APS-K) can be connected between the sensor and the electronics as an option. The max. cable length between the sensor and the electronics is 10 m, between the electronics and their control unit (PLC) it is max. 1 m.

Cylindrical reed switches

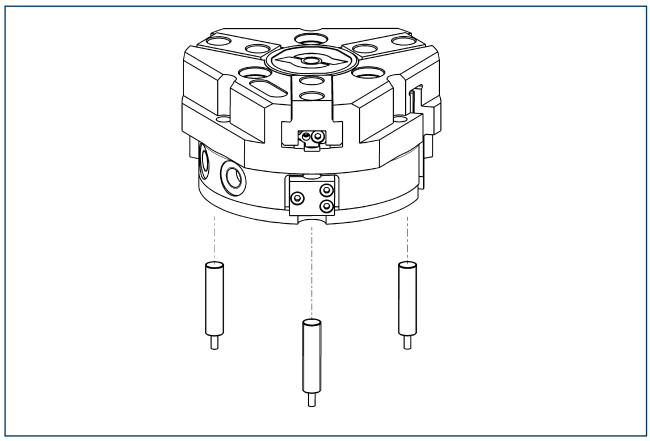

Limit position monitor can be mounted with mounting kit.

Description	ID	
Mounting kit for proximity switch		
AS-RMS 80 PGN/PZN-plus 64/80	0377725	
Reed switches		
RMS 80-S-M8	0377721	

ⓘ Two sensors (closer/S) are required for each unit, plus extension cables as an option. This mounting kit needs to be ordered optionally as an accessory. Two mounting kits are required per gripper. Please note the minimum permitted bending radii for the sensor cables, which are generally 35 mm.

JGZ 100

SCHUNK Grippers pneumatic | 3-Finger Centric Grippers | Universal Gripper

Gripping force, O.D. gripping

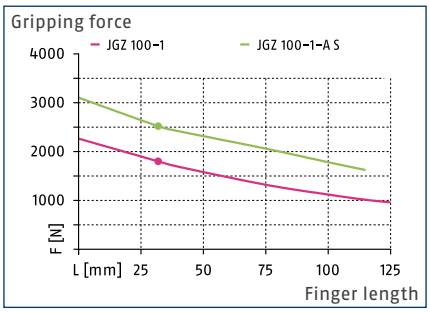

Gripping force, I.D. gripping

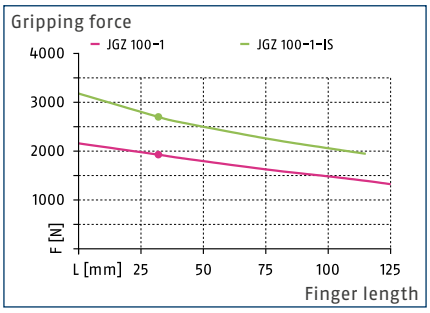

Finger load

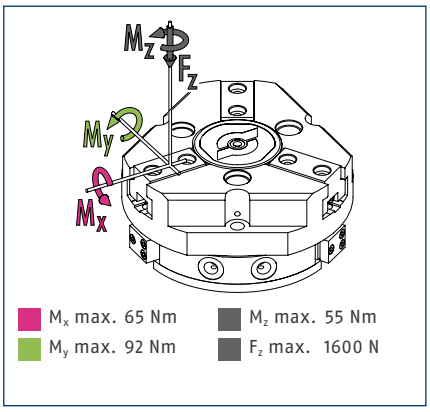

ⓘ The indicated moments and forces are static values, apply per base jaw and may occur simultaneously. M_y may arise in addition to the moment generated by the gripping force itself. If the max. permitted finger weight is exceeded, it is impreative to throttle the air supply so that the jaw movement occurs without any hitting or bouncing. Service life may be reduced.

Technical data

Description		JGZ 100-1	JGZ 100-1-AS	JGZ 100-1-IS
ID		0308940	0308941	0308942
Stroke per jaw	[mm]	10	10	10
Closing- / opening force	[N]	1800/1920	2520/-	-/2700
min. spring force	[N]		720	780
Weight	[kg]	1.41	1.95	1.95
Recommended workpiece weight	[kg]	9	9	9
Fluid consumption per double stroke	[cm³]	120	120	120
min. / max. operating pressure	[bar]	2/8	4/6.5	4/6.5
Nominal operating pressure	[bar]	6	6	6
Closing- / opening time	[s]	0.1/0.1	0.1/0.2	0.2/0.1
Closing- / opening time only with spring	[s]		0.25	0.25
max. permitted finger length	[mm]	125	115	115
max. permitted weight per finger	[kg]	1.1	1.1	1.1
IP class		40	40	40
min. / max. ambient temperature	[°C]	5/90	5/90	5/90
Repeat accuracy	[mm]	0.01	0.01	0.01
Cleanroom class ISO 14644-1		5	5	5

Main view

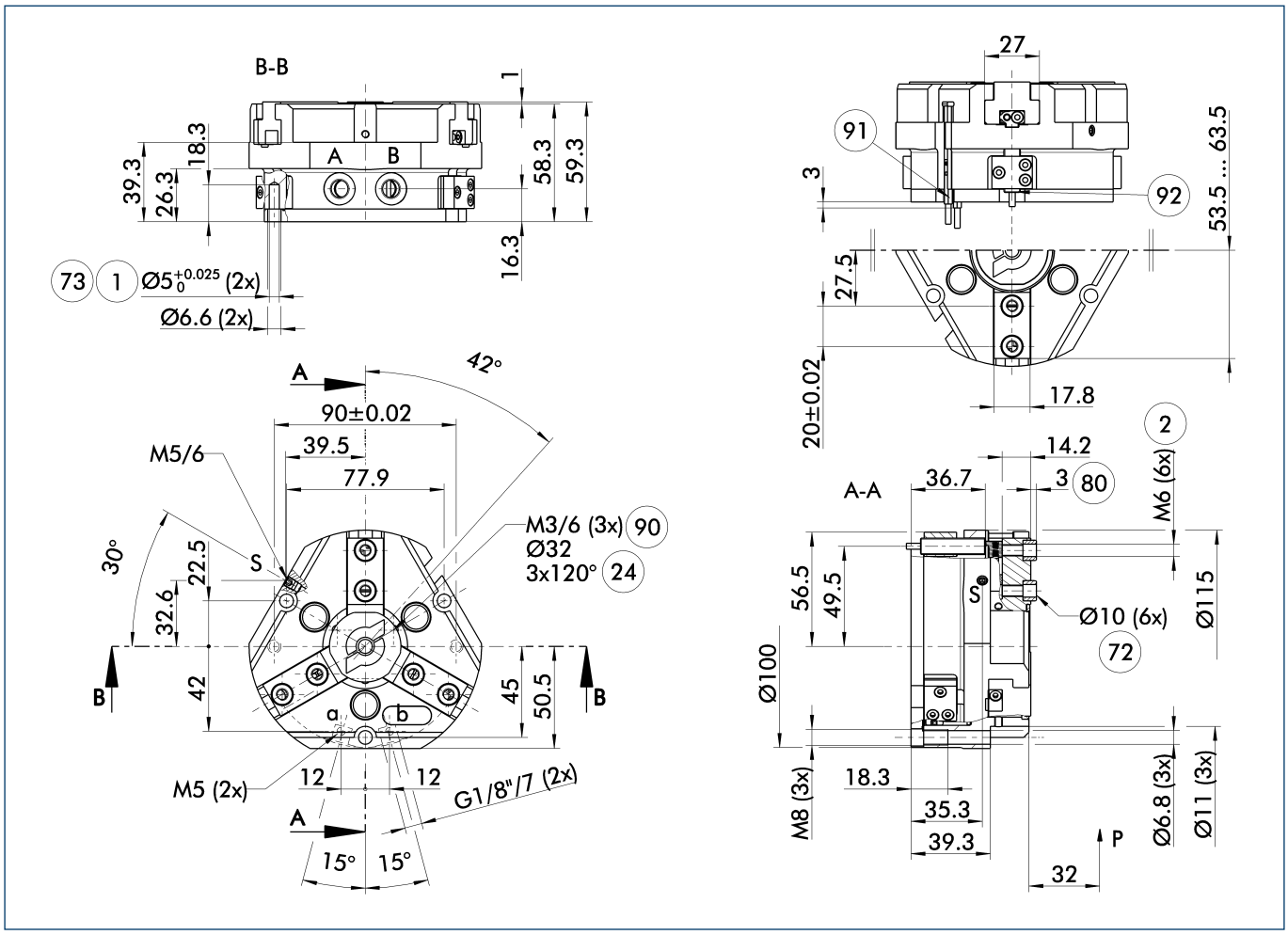

The drawing shows the gripper in the basic version with closed jaws, without dimensional consideration of the options described below.

ⓘ The SDV-P pressure maintenance valve can also be used for I.D. or O.D. gripping alternatively or in addition to the spring-loaded, mechanical gripping force maintenance device (see catalog section on "Accessories").

A, a Main / direct connection, gripper opening

B, b Main / direct connection, gripper closing

S Air purge connection (0.5 ... 1 bar)

(1) Gripper connection

(2) Finger connection

(24) Bolt circle

(72) Fit for centering sleeves

(73) Fit for centering pins

(80) Depth of the centering sleeve hole in the mating part

(90) Thread below the cover for fastening external attachments

(91) MMS 22... sensor

(92) IN ... sensor

Hose-free direct connection M5

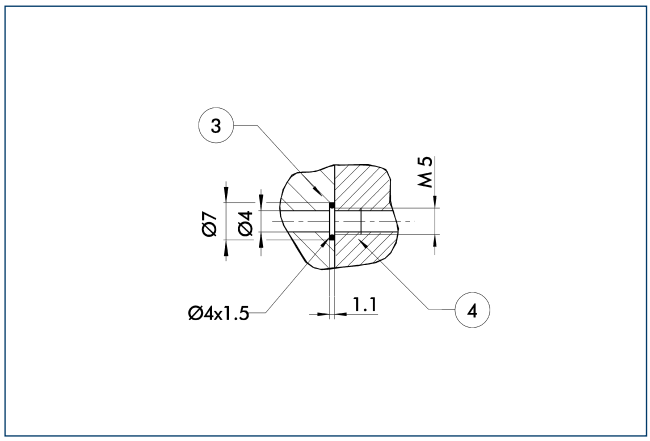

(3) Adapter (4) Gripper

The direct connection is used for supplying compressed air without hoses. Instead, the pressure medium is fed through bore-holes in the mounting plate.

Gripping force maintenance device AS / IS

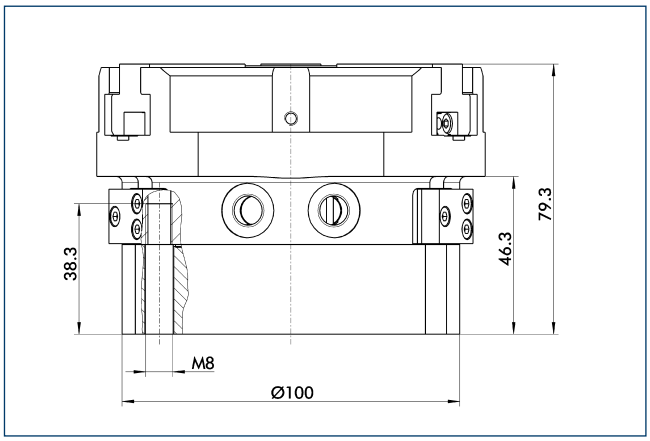

The mechanical maintenance of gripping force also assures a minimum gripping force in the case of a loss of pressure. With the AS / S variant, this acts as a closing force, and as an opening force for the IS variant. The maintenance of gripping force element can also be used as a means for increasing gripping force or for single actuated gripping.

Spring-loaded pressure piece

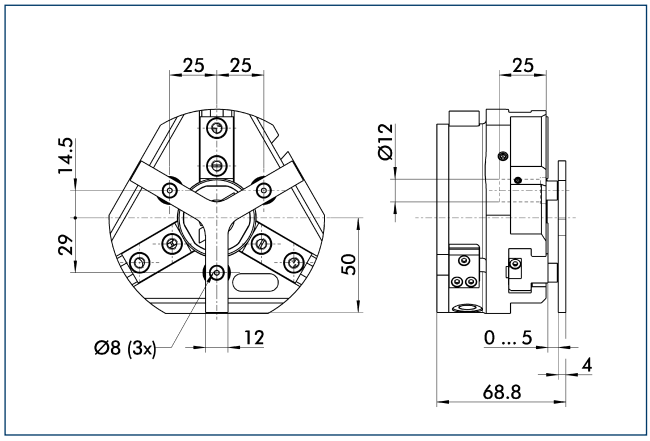

For spring-supported positioning of the workpiece against a stop after the gripper has opened. Especially developed for loading machines.

Description	ID	Stroke [mm]	Min. force [N]
Spring-loaded pressure piece			
A-PZN-plus/DPZ-plus 100	0303722	5	35

SDV-P pressure maintenance valve

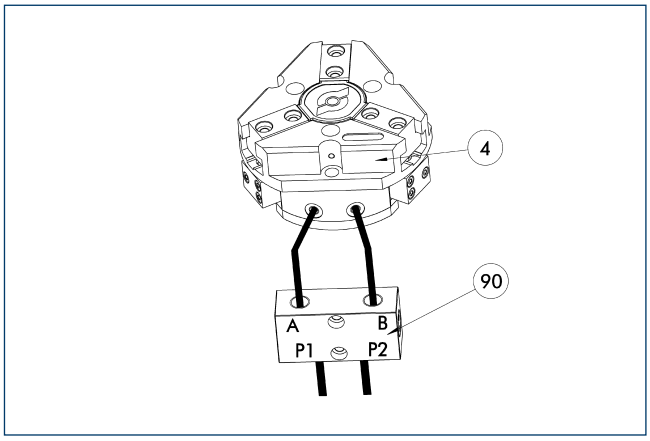

(4) Gripper (90) SDV-P pressure maintenance valve

The SDV-P pressure maintenance valves ensure that the pressure in the piston chamber of pneumatic gripping, rotary, linear, and quick-change modules is maintained temporarily during an emergency stop.

Description	ID	
Pressure maintenance valve		
SDV-P 04	0403130	

BSWS jaw quick-change systems

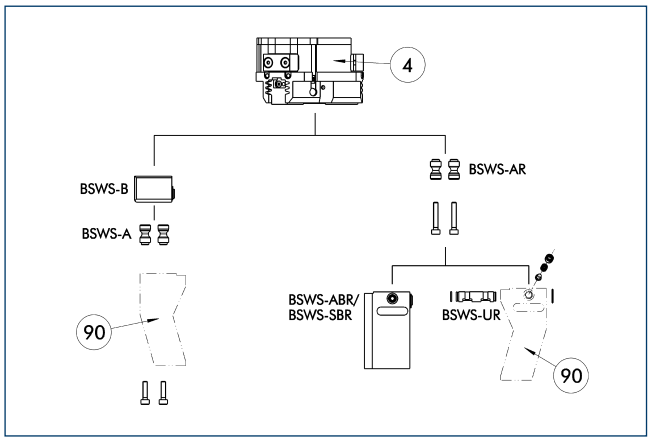

(4) Gripper
(90) Customized gripper fingers

There are various jaw quick-change systems available for the grippers. For detailed information, refer to the appropriate product.

Description	ID	
Jaw quick-change system adapter		
BSWS-AR 100	0300094	
BSWS-A 100	0303026	
Jaw quick-change system base		
BSWS-B 100	0303027	
Finger blanks with jaw quick-change system		
BSWS-ABR-PGZN-plus 100	0300074	
BSWS-SBR-PGZN-plus 100	0300084	
Jaw quick-change system reversed		
BSWS-UR 100	0302993	

ⓘ Only the systems listed in the table can be used.

ZBA L-plus 100 intermediate jaws

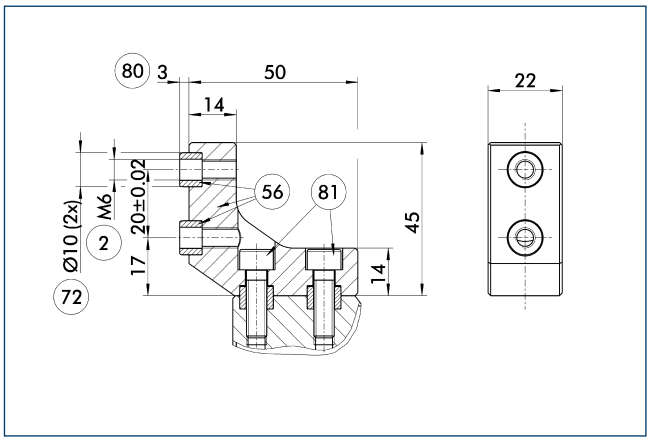

(2) Finger connection
(56) Included in delivery
(72) Fit for centering sleeves
(80) Depth of the centering sleeve hole in the mating part
(81) Not included in the scope of delivery

Optionally intermediate jaws can be used, enabling direct connection and alignment of top jaws and various standard accessories in Z-direction.

Description	ID	Material	Scope of delivery
Intermediate jaws			
ZBA-L-plus 100	0311742	Aluminum	1

UZB 100 universal intermediate jaw

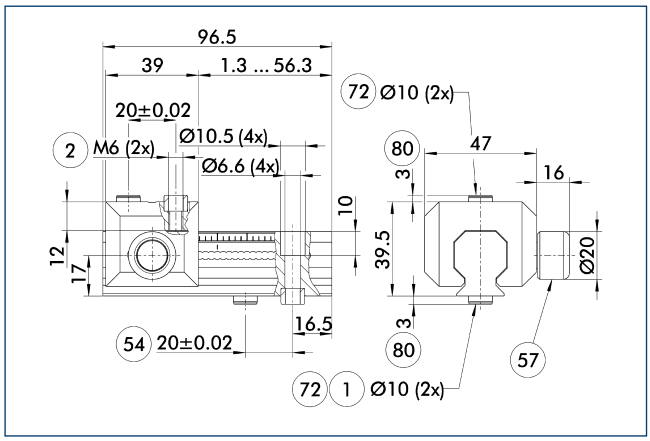

1. Gripper connection
2. Finger connection
54. Optional right or left connection
57. Locking
72. Fit for centering sleeves
80. Depth of the centering sleeve hole in the mating part

The universal intermediate jaw allows fast tool-free and reliable plugging and shifting of top jaws at the gripper.

Description	ID	Grid dimension [mm]
Universal intermediate jaw		
UZB 100	0300044	2.5
UZB-S 100	5518272	2.5
Finger blanks		
ABR-PGZN-plus 100	0300012	
SBR-PGZN-plus 100	0300022	

FMS-ZBA / ZBP 100 force-measuring jaws

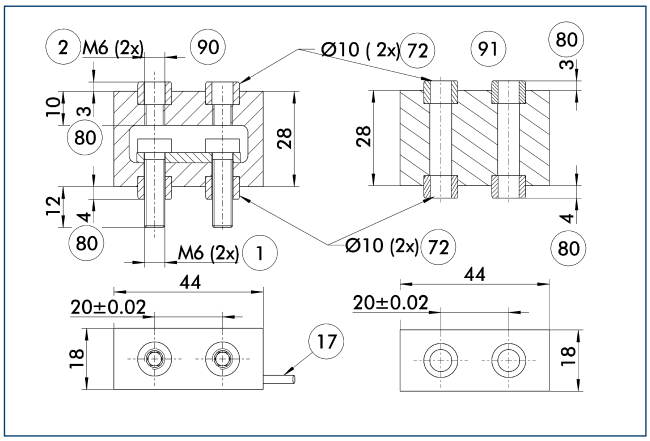

1. Gripper connection
2. Finger connection
17. Cable outlet
72. Fit for centering sleeves
80. Depth of the centering sleeve hole in the mating part
90. Active intermediate jaws
91. Passive intermediate jaws

Force measuring jaws measure gripping forces, but can also determine workpiece weights or dimensional deviations. There are active and passive intermediate jaws (FMS-ZBA or FMS-ZBP). At least one active force measuring jaw is required per gripper, the rest can be passive. For each active jaw, a FMS-A control unit and a FMS-AK connection cable are required.

Description	ID	Often combined
Active intermediate jaws		
FMS-ZBA 100	0301836	
Passive intermediate jaws		
FMS-ZBP 100	0301837	
Connection cables		
FMS-AK0200	0301820	●
FMS-AK0500	0301821	
FMS-AK1000	0301822	
FMS-AK2000	0301823	
Electronic processor		
FMS-A1	0301810	

ABR- / SBR-PGZN-plus 100 finger blanks

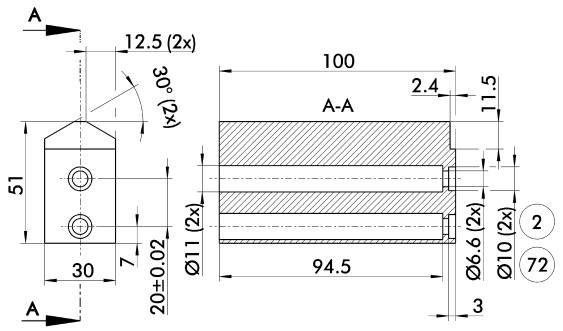

(2) Finger connection (72) Fit for centering sleeves

Finger blanks for customized subsequent machining.

Description	ID	Material	Scope of delivery
Finger blanks			
ABR-PGZN-plus 100	0300012	Aluminum	1
SBR-PGZN-plus 100	0300022	16MnCr5	1

Modular assembly automation

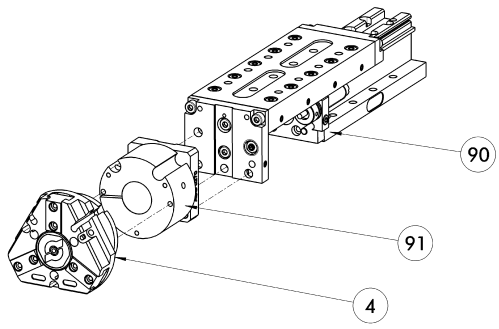

(4) Gripper (91) ASG adapter plate
(90) CLM / KLM / LM / ELM / ELS / HLM linear module

Gripper and linear modules can be combined with standard adapters out of the modular assembly system. For more information see our catalog "Modular Assembly Automation".

Inductive proximity switches

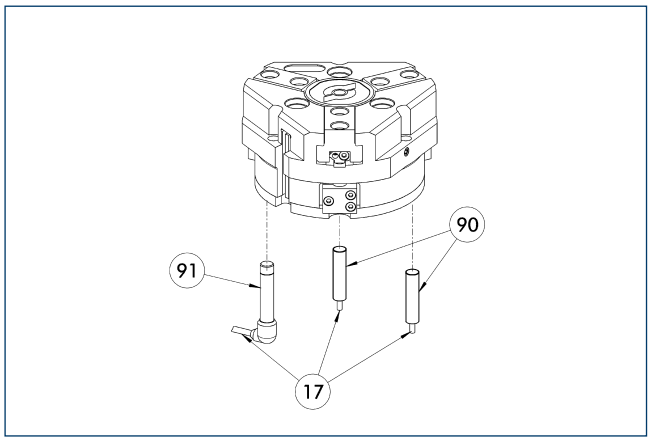

(17) Cable outlet
(90) IN ... sensor
(91) IN ...-SA sensor

Directly mounted limit position monitor.

Description	ID	Often combined
Inductive proximity switches		
IN 80-S-M12	0301578	
IN 80-S-M8	0301478	●
INK 80-S	0301550	
Inductive proximity switches with lateral outlet		
IN 80-S-M12-SA	0301587	
IN 80-S-M8-SA	0301483	●
INK 80-S-SA	0301566	
Cable extensions		
KV BG12-SG12 3P-0030-PNP	0301999	
KV BG12-SG12 3P-0060-PNP	0301998	
KV BW08-SG08 3P-0030-PNP	0301495	
KV BW08-SG08 3P-0100-PNP	0301496	
KV BW08-SG08 3P-0200-PNP	0301497	●
KV BW12-SG12 3P-0030-PNP	0301595	
KV BW12-SG12 3P-0100-PNP	0301596	
KV BW12-SG12 3P-0200-PNP	0301597	
Clip for plug / socket		
CLI-M12	0301464	
CLI-M8	0301463	
Connection cables		
KA BG08-L 3P-0300-PNP	0301622	●
KA BG08-L 3P-0500-PNP	0301623	
KA BG12-L 3P-0500-PNP	30016369	
KA BW08-L 3P-0300-PNP	0301594	
KA BW08-L 3P-0500-PNP	0301502	
KA BW12-L 3P-0300-PNP	0301503	
KA BW12-L 3P-0500-PNP	0301507	
Sensor distributor		
V2-M8	0301775	●
V2-M12	0301776	●
V4-M12	0301747	
V4-M8	0301746	

ⓘ Two sensors (closer/S) are required for each unit, plus extension cables as an option. Please note the minimum permitted bending radii for the sensor cables, which are generally 35 mm.

Flexible position sensor

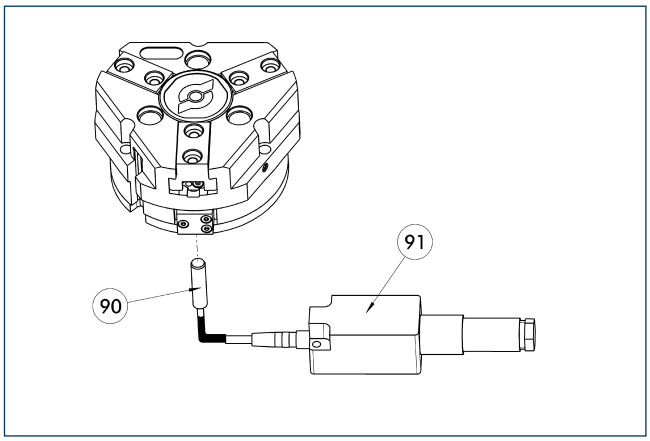

(90) FPS-S sensor
(91) FPS-F5 / -F5 T electronic processor

Flexible position monitoring of up to five positions.

Description	ID	Often combined
Mounting kit for FPS		
AS-FPS-PGZN-plus 100-1	0301634	
Electronic processor		
FPS-F5	0301805	●
FPS-F5 T	0301807	
Sensor		
FPS-S M8	0301704	
Clip for plug / socket		
CLI-M8	0301463	

ⓘ When using a FPS system, a FPS sensor (FPS-S) and a control unit (FPS-F5 / F5 T) are required for each gripper as well as a mounting kit (AS), if listed. Cable extensions (KV) are available as options in the "Accessories" catalog section.

MMS electronic magnetic switches

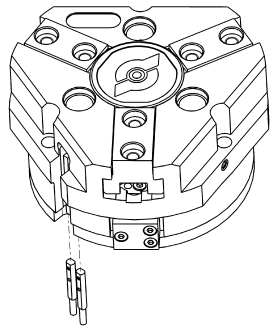

End position monitoring for mounting in the C-slot.

Description	ID	Often combined
MMS electronic magnetic switches		
MMS 22-S-M8-PNP	0301032	●
MMSK 22-S-PNP	0301034	
MMS electronic magnetic switches with lateral cable outlet		
MMS 22-S-M8-PNP-SA	0301042	●
MMSK 22-S-PNP-SA	0301044	
Reed switches		
RMS 22-S-M8	0377720	●
Cable extensions		
KV BW08-SG08 3P-0030-PNP	0301495	
KV BW08-SG08 3P-0100-PNP	0301496	
KV BW08-SG08 3P-0200-PNP	0301497	●
Clip for plug / socket		
CLI-M8	0301463	
Connection cables		
KA BG08-L 3P-0300-PNP	0301622	●
KA BG08-L 3P-0500-PNP	0301623	
KA BW08-L 3P-0300-PNP	0301594	
KA BW08-L 3P-0500-PNP	0301502	
RSS radio sensor system		
RSS-T2	0377710	
Sensor distributor		
V2-M8	0301775	●
V4-M8	0301746	
V8-M8	0301751	

ⓘ Two sensors (closer/S) are required for each unit, plus extension cables as an option. Please note the minimum permitted bending radii for the sensor cables, which are generally 35 mm.

MMS PI1 programmable magnetic switches

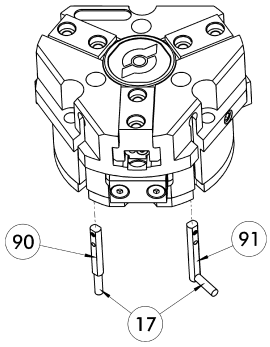

(17) Cable outlet
(90) MMS 22...-PI1-... sensor
(91) MMS 22...-PI1-...-SA sensor

Position query with one programmable position per sensor and electronics integrated in sensor. Programmable via MT magnet teaching tool (included in the scope of delivery) or ST plug teaching tool (optional). Limit position query mounted in C-groove. If the ST plug teaching tools are listed in the table, teaching can only take place with the ST plug teaching tools.

Description	ID	Often combined
MMS PI1 programmable magnetic switches		
MMS 22-PI1-S-M8-PNP	0301160	●
MMSK 22-PI1-S-PNP	0301162	
MMS PI1-HD programmable magnetic switches with stainless steel housing		
MMS 22-PI1-S-M8-PNP-HD	0301110	●
MMSK 22-PI1-S-PNP-HD	0301112	
MMS PI1 programmable magnetic switches with lateral cable outlet		
MMS 22-PI1-S-M8-PNP-SA	0301166	●
MMSK 22-PI1-S-PNP-SA	0301168	

ⓘ Two sensors (closer/S) are required for each unit, plus extension cables as an option. Please note the minimum permitted bending radii for the sensor cables, which are generally 35 mm. Connection cable, cable extensions, and sensor distributors can be found in the table for the MMS 22.

MMS PI2 programmable magnetic switches

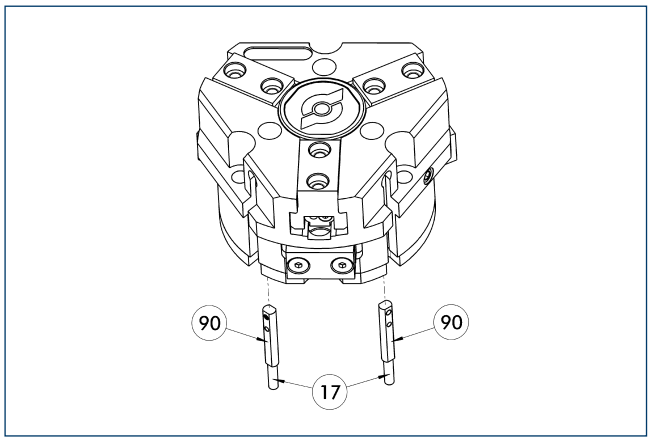

(17) Cable outlet (90) MMS 22...-PI2-... sensor

Position query with two programmable positions per sensor and electronics integrated in sensor. Programmable via MT magnet teaching tool (included in the scope of delivery) or ST plug teaching tool (optional). Limit position query mounted in C-groove. If the ST plug teaching tools are listed in the table, teaching can only take place with the ST plug teaching tools.

Description	ID	Often combined
MMS PI2 programmable magnetic switches		
MMS 22-PI2-S-M8-PNP	0301180	●
MMSK 22-PI2-S-PNP	0301182	
MMS PI2-HD programmable magnetic switches with stainless steel housing		
MMS 22-PI2-S-M8-PNP-HD	0301130	●
MMSK 22-PI2-S-PNP-HD	0301132	

ⓘ Per unit one sensor (closer/S) is required, optionally a cable extension. Please note the minimum permitted bending radii for the sensor cables, which are generally 35 mm. Connection cable, cable extensions, and sensor distributors can be found in the table for the MMS-P 22.

MMS-P programmable magnetic switches

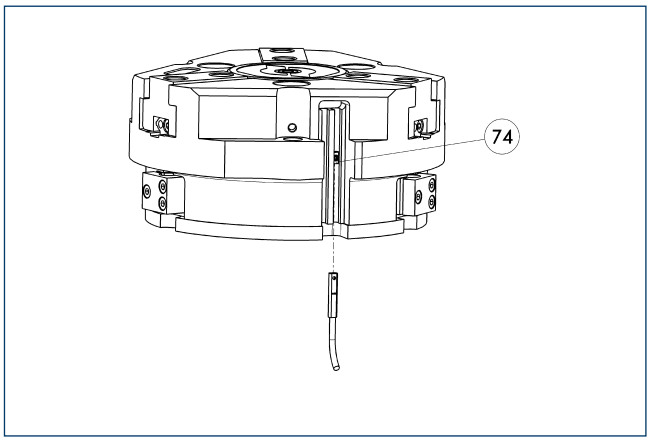

(74) Stop for MMS-P

Position monitoring with two programmable positions per sensor. The end position monitoring is mounted in the C-slot.

Description	ID	Often combined
MMS-P programmable magnetic switches		
MMSK-P 22-S-PNP	0301371	
MMS-P 22-S-M8-PNP	0301370	●
Clip for plug / socket		
CLI-M8	0301463	
Connection cables		
KA BG08-L 4P-0500	0307767	●
KA BG08-L 4P-1000	0307768	
KA BW08-L 4P-0500	0307765	
KA BW08-L 4P-1000	0307766	
Sensor distributor		
V2-M8-4P-2XM8-3P	0301380	

ⓘ Per unit one sensor (closer/S) is required, optionally a cable extension. Please note the minimum permitted bending radii for the sensor cables, which are generally 35 mm.

APS-Z80 analog position sensor

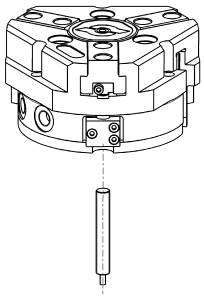

Contactlessly measuring, analog multi-position monitoring for any number of positions.

Description	ID	Often combined
Mounting kit for APS-Z80		
AS-APS-Z80-PGZN-plus 100-1	0302109	
Sensor		
APS-Z80-K	0302072	
APS-Z80-M8	0302070	●

ⓘ When using an APS system, one mounting kit (AS-APS-Z80) and one APS-Z80 sensor is required per gripper.

APS-M1 analog position sensor

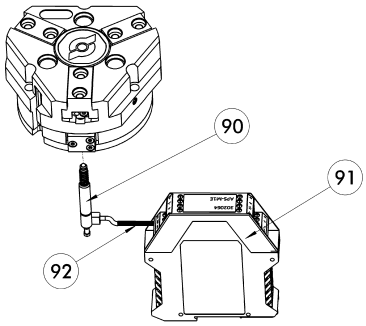

(90) APS-M1S sensor
(91) APS-M1E electronic processor
(92) APS-K extension cable

Analog multi position monitoring for any desired positions.

Description	ID	Often combined
Mounting kit for APS-M1		
AS-APS-M1-PGZN-plus 100-1	0302079	
Connection cables		
APS-K0200	0302066	●
APS-K0700	0302068	
Electronic processor		
APS-M1E	0302064	
Sensor		
APS-M1S	0302062	

ⓘ When using an APS system, for each gripper a mounting kit (AS-APS-M1), an APS-M1S sensor (incl. 3 m cable) as well as an electronics (APS-M1e) are required. An extension cable (APS-K) can be connected between the sensor and the electronics as an option. The max. cable length between the sensor and the electronics is 10 m, between the electronics and their control unit (PLC) it is max. 1 m.

Cylindrical reed switches

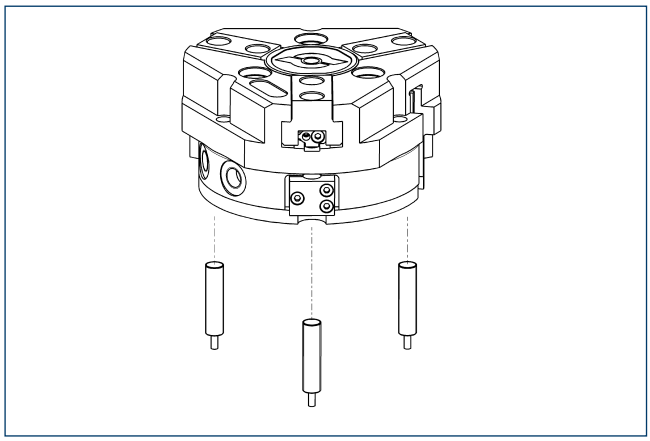

Limit position monitor can be mounted with mounting kit.

Description	ID	
Mounting kit for proximity switch		
AS-RMS 80 PGN/PZN-plus 100/125	0377726	
Reed switches		
RMS 80-S-M8	0377721	

ⓘ Two sensors (closer/S) are required for each unit, plus extension cables as an option. This mounting kit needs to be ordered optionally as an accessory. Two mounting kits are required per gripper. Please note the minimum permitted bending radii for the sensor cables, which are generally 35 mm.

JGZ 125

SCHUNK Grippers pneumatic | 3-Finger Centric Grippers | Universal Gripper

Gripping force, O.D. gripping

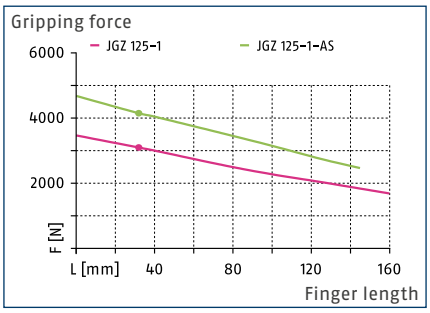

Gripping force, I.D. gripping

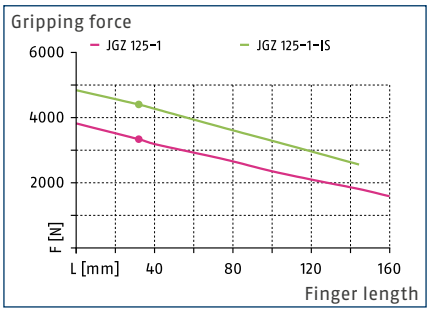

Finger load

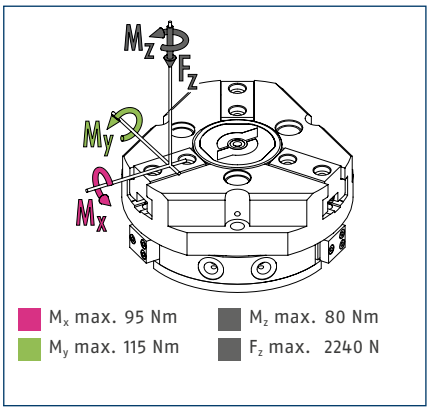

ⓘ The indicated moments and forces are static values, apply per base jaw and may occur simultaneously. M_y may arise in addition to the moment generated by the gripping force itself. If the max. permitted finger weight is exceeded, it is impreative to throttle the air supply so that the jaw movement occurs without any hitting or bouncing. Service life may be reduced.

Technical data

Description		JGZ 125-1	JGZ 125-1-AS	JGZ 125-1-IS
ID		0308950	0308951	0308952
Stroke per jaw	[mm]	13	13	13
Closing- / opening force	[N]	3100/3330	4150/-	-/4400
min. spring force	[N]		1050	1070
Weight	[kg]	2.8	3.6	3.6
Recommended workpiece weight	[kg]	15.5	15.5	15.5
Fluid consumption per double stroke	[cm³]	230	230	230
min. / max. operating pressure	[bar]	2/8	4/6.5	4/6.5
Nominal operating pressure	[bar]	6	6	6
Closing- / opening time	[s]	0.2/0.2	0.17/0.35	0.35/0.17
Closing- / opening time only with spring	[s]		0.40	0.40
max. permitted finger length	[mm]	160	145	145
max. permitted weight per finger	[kg]	2.1	2.1	2.1
IP class		40	40	40
min. / max. ambient temperature	[°C]	5/90	5/90	5/90
Repeat accuracy	[mm]	0.01	0.01	0.01
Cleanroom class ISO 14644-1		5	5	5

Main view

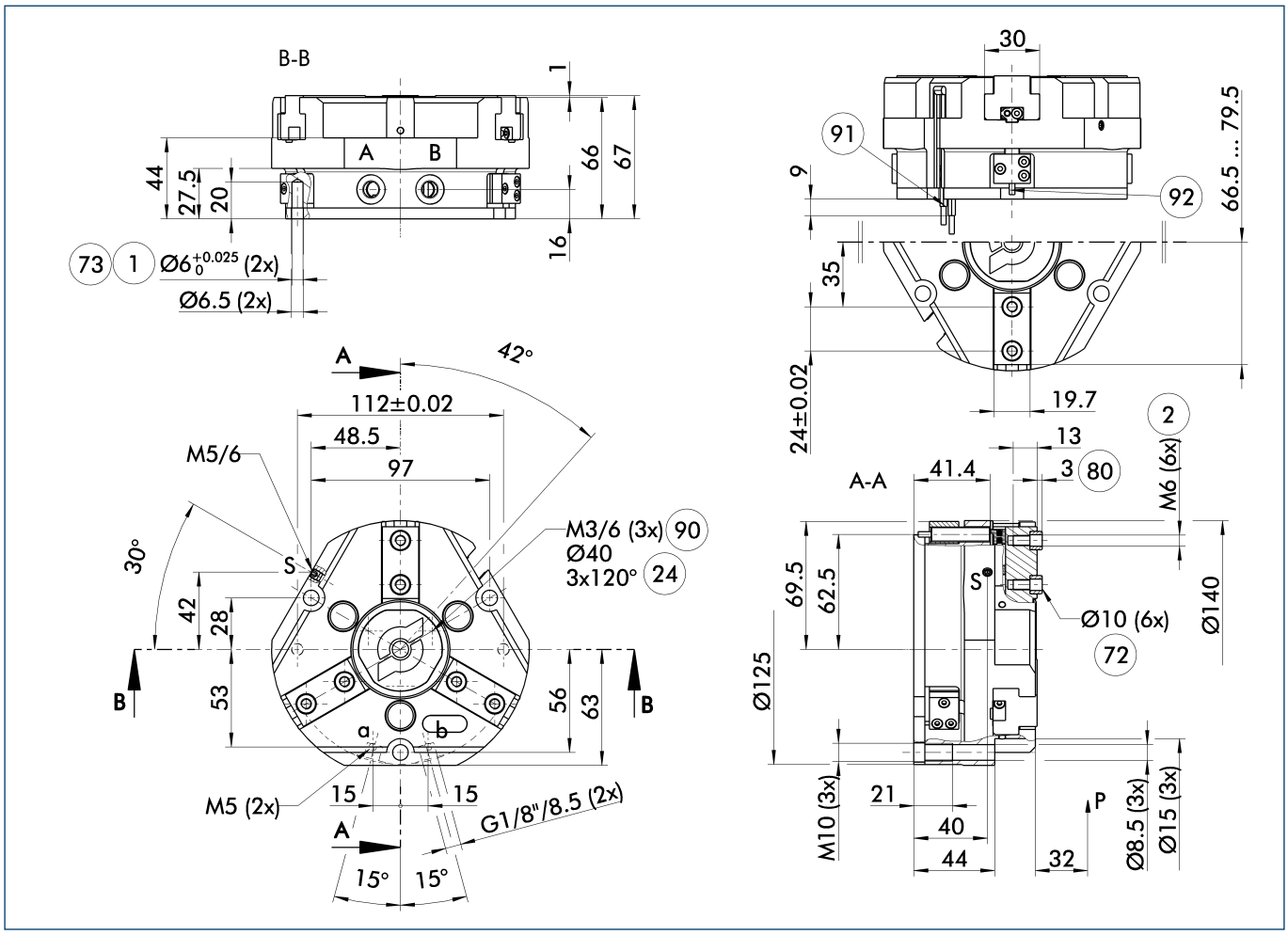

The drawing shows the gripper in the basic version with closed jaws, without dimensional consideration of the options described below.

ⓘ The SDV-P pressure maintenance valve can also be used for I.D. or O.D. gripping alternatively or in addition to the spring-loaded, mechanical gripping force maintenance device (see catalog section on "Accessories").

A, a Main / direct connection, gripper opening

B, b Main / direct connection, gripper closing

S Air purge connection (0.5 ... 1 bar)

(1) Gripper connection

(2) Finger connection

(24) Bolt circle

(72) Fit for centering sleeves

(73) Fit for centering pins

(80) Depth of the centering sleeve hole in the mating part

(90) Thread below the cover for fastening external attachments

(91) MMS 22... sensor

(92) IN ... sensor

Hose-free direct connection M5

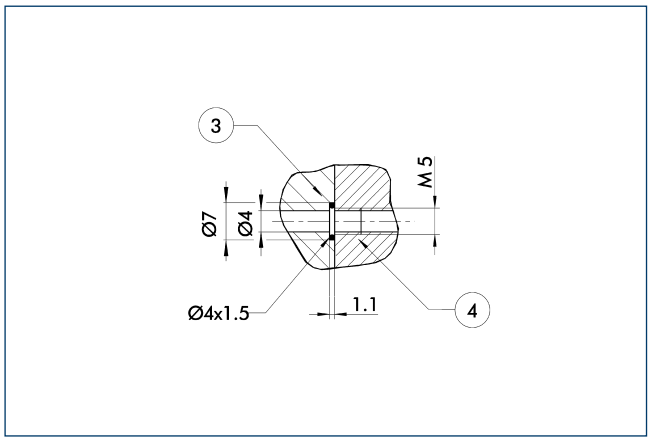

(3) Adapter (4) Gripper

The direct connection is used for supplying compressed air without hoses. Instead, the pressure medium is fed through bore-holes in the mounting plate.

Gripping force maintenance device AS / IS

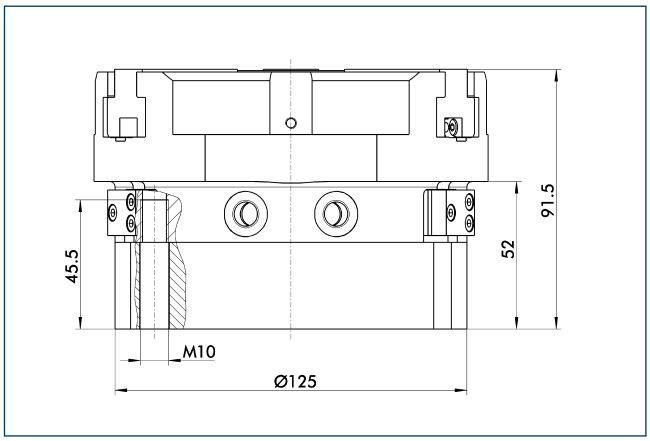

The mechanical maintenance of gripping force also assures a minimum gripping force in the case of a loss of pressure. With the AS / S variant, this acts as a closing force, and as an opening force for the IS variant. The maintenance of gripping force element can also be used as a means for increasing gripping force or for single actuated gripping.

Spring-loaded pressure piece

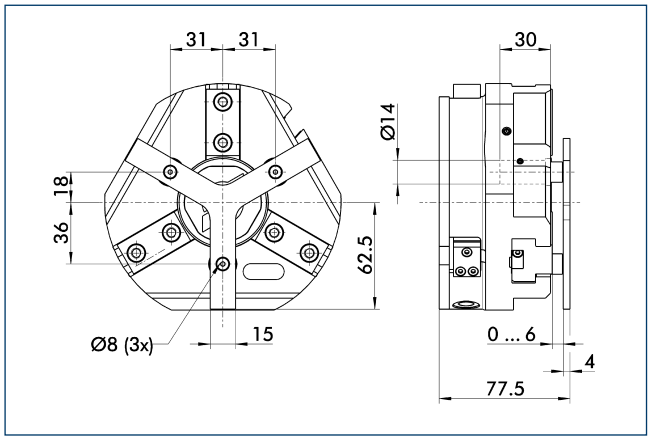

For spring-supported positioning of the workpiece against a stop after the gripper has opened. Especially developed for loading machines.

Description	ID	Stroke [mm]	Min. force [N]
Spring-loaded pressure piece			
A-PZN-plus/DPZ-plus 125	0303723	6	105

SDV-P pressure maintenance valve

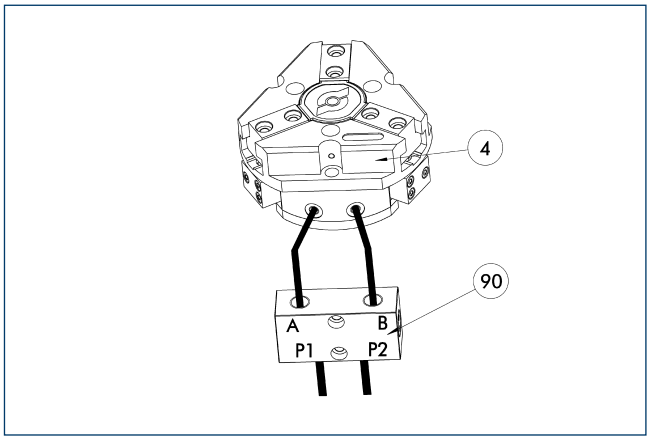

(4) Gripper (90) SDV-P pressure maintenance valve

The SDV-P pressure maintenance valves ensure that the pressure in the piston chamber of pneumatic gripping, rotary, linear, and quick-change modules is maintained temporarily during an emergency stop.

Description	ID	
Pressure maintenance valve		
SDV-P 04	0403130	

BSWS jaw quick-change systems

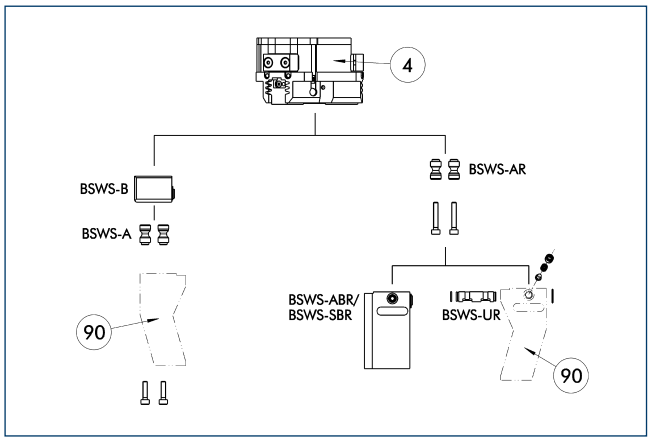

(4) Gripper
(90) Customized gripper fingers

There are various jaw quick-change systems available for the grippers. For detailed information, refer to the appropriate product.

Description	ID	
Jaw quick-change system adapter		
BSWS-AR 125	0300095	
BSWS-A 125	0303028	
Jaw quick-change system base		
BSWS-B 125	0303029	
Finger blanks with jaw quick-change system		
BSWS-ABR-PGZN-plus 125	0300075	
BSWS-SBR-PGZN-plus 125	0300085	
Jaw quick-change system reversed		
BSWS-UR 125	0302994	

ⓘ Only the systems listed in the table can be used.

ZBA L-plus 125 intermediate jaws

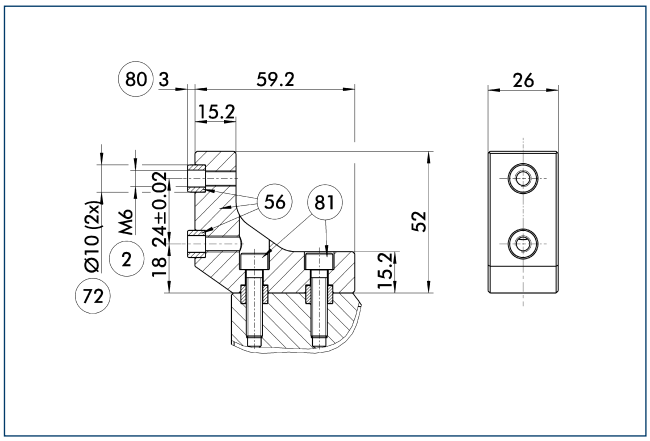

(2) Finger connection
(56) Included in delivery
(72) Fit for centering sleeves
(80) Depth of the centering sleeve hole in the mating part
(81) Not included in the scope of delivery

Optionally intermediate jaws can be used, enabling direct connection and alignment of top jaws and various standard accessories in Z-direction.

Description	ID	Material	Scope of delivery
Intermediate jaws			
ZBA-L-plus 125	0311752	Aluminum	1

UZB 125 universal intermediate jaw

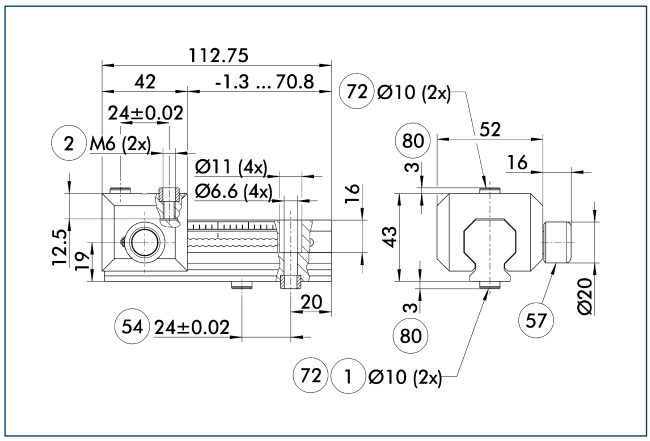

1 Gripper connection
2 Finger connection
54 Optional right or left connection
57 Locking
72 Fit for centering sleeves
80 Depth of the centering sleeve hole in the mating part

The universal intermediate jaw allows fast tool-free and reliable plugging and shifting of top jaws at the gripper.

Description	ID	Grid dimension [mm]
Universal intermediate jaw		
UZB 125	0300045	3
UZB-S 125	5518273	3
Finger blanks		
ABR-PGZN-plus 125	0300013	
SBR-PGZN-plus 125	0300023	

FMS-ZBA / ZBP 125 force-measuring jaws

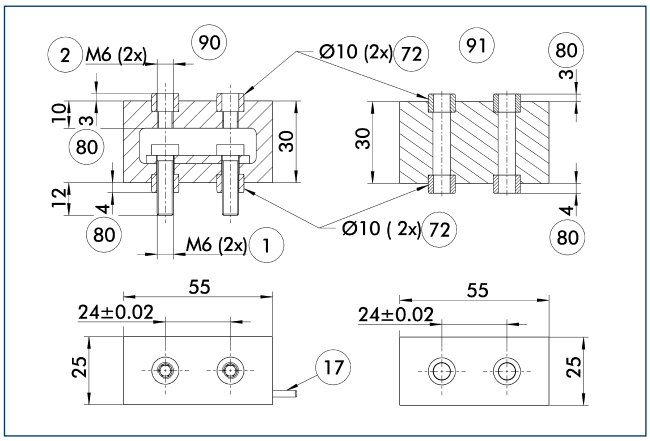

1 Gripper connection
2 Finger connection
17 Cable outlet
72 Fit for centering sleeves
80 Depth of the centering sleeve hole in the mating part
90 Active intermediate jaws
91 Passive intermediate jaws

Force measuring jaws measure gripping forces, but can also determine workpiece weights or dimensional deviations. There are active and passive intermediate jaws (FMS-ZBA or FMS-ZBP). At least one active force measuring jaw is required per gripper, the rest can be passive. For each active jaw, a FMS-A1 control unit and a FMS-AK connection cable are required.

Description	ID	Often combined
Active intermediate jaws		
FMS-ZBA 125	0301838	
Passive intermediate jaws		
FMS-ZBP 125	0301839	
Connection cables		
FMS-AK0200	0301820	●
FMS-AK0500	0301821	
FMS-AK1000	0301822	
FMS-AK2000	0301823	
Electronic processor		
FMS-A1	0301810	

ABR- / SBR-PGZN-plus 125 finger blanks

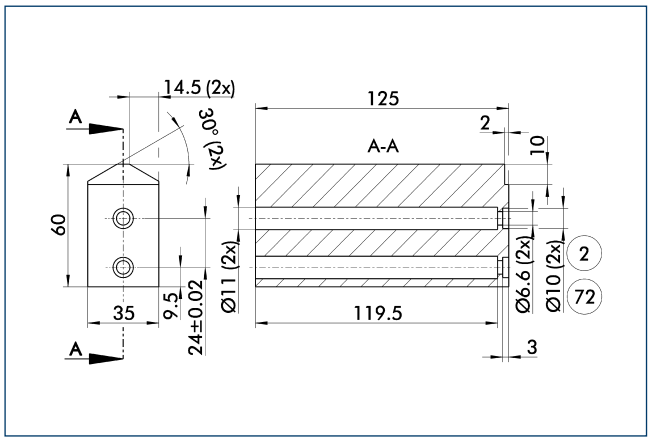

(2) Finger connection (72) Fit for centering sleeves

Finger blanks for customized subsequent machining.

Description	ID	Material	Scope of delivery
Finger blanks			
ABR-PGZN-plus 125	0300013	Aluminum	1
SBR-PGZN-plus 125	0300023	16MnCr5	1

Inductive proximity switches

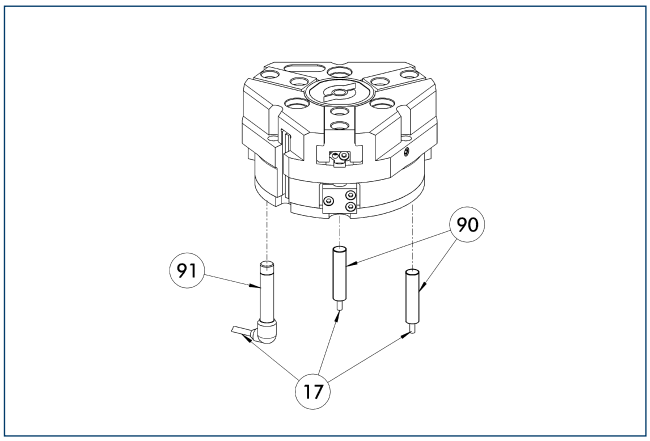

(17) Cable outlet (91) IN ...-SA sensor
(90) IN ... sensor

Directly mounted limit position monitor.

Description	ID	Often combined
Inductive proximity switches		
IN 80-S-M12	0301578	
IN 80-S-M8	0301478	●
INK 80-S	0301550	
Inductive proximity switches with lateral outlet		
IN 80-S-M12-SA	0301587	
IN 80-S-M8-SA	0301483	●
INK 80-S-SA	0301566	
Cable extensions		
KV BG12-SG12 3P-0030-PNP	0301999	
KV BG12-SG12 3P-0060-PNP	0301998	
KV BW08-SG08 3P-0030-PNP	0301495	
KV BW08-SG08 3P-0100-PNP	0301496	
KV BW08-SG08 3P-0200-PNP	0301497	●
KV BW12-SG12 3P-0030-PNP	0301595	
KV BW12-SG12 3P-0100-PNP	0301596	
KV BW12-SG12 3P-0200-PNP	0301597	
Clip for plug / socket		
CLI-M12	0301464	
CLI-M8	0301463	
Connection cables		
KA BG08-L 3P-0300-PNP	0301622	●
KA BG08-L 3P-0500-PNP	0301623	
KA BG12-L 3P-0500-PNP	30016369	
KA BW08-L 3P-0300-PNP	0301594	
KA BW08-L 3P-0500-PNP	0301502	
KA BW12-L 3P-0300-PNP	0301503	
KA BW12-L 3P-0500-PNP	0301507	
Sensor distributor		
V2-M8	0301775	●
V2-M12	0301776	●
V4-M12	0301747	
V4-M8	0301746	

ⓘ Two sensors (closer/S) are required for each unit, plus extension cables as an option. Please note the minimum permitted bending radii for the sensor cables, which are generally 35 mm.

Flexible position sensor

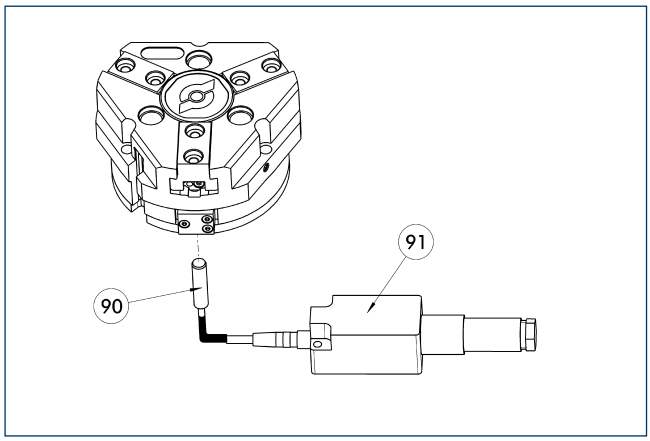

90 FPS-S sensor

91 FPS-F5 / -F5 T electronic processor

Flexible position monitoring of up to five positions.

Description	ID	Often combined
Mounting kit for FPS		
AS-FPS-PGZN-plus 125-1/PZB 160	0301636	
Electronic processor		
FPS-F5 T	0301805	●
FPS-F5 T	0301807	
Sensor		
FPS-S M8	0301704	
Clip for plug / socket		
CLI-M8	0301463	

ⓘ When using a FPS system, a FPS sensor (FPS-S) and a control unit (FPS-F5 / F5 T) are required for each gripper as well as a mounting kit (AS), if listed. Cable extensions (KV) are available as options in the "Accessories" catalog section.

MMS electronic magnetic switches

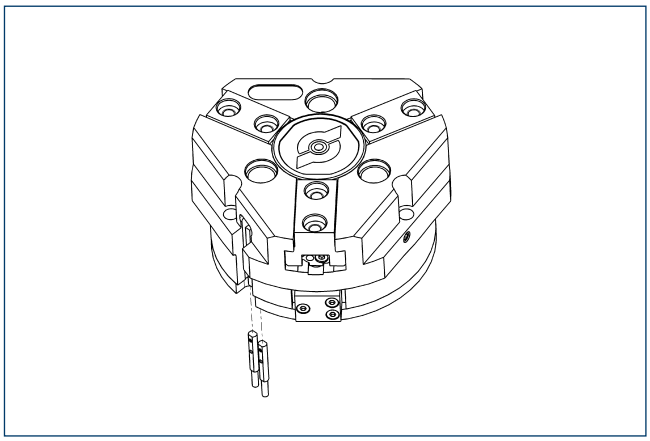

End position monitoring for mounting in the C-slot.

Description	ID	Often combined
MMS electronic magnetic switches		
MMS 22-S-M8-PNP	0301032	●
MMSK 22-S-PNP	0301034	
MMS electronic magnetic switches with lateral cable outlet		
MMS 22-S-M8-PNP-SA	0301042	●
MMSK 22-S-PNP-SA	0301044	
Reed switches		
RMS 22-S-M8	0377720	●
Cable extensions		
KV BW08-SG08 3P-0030-PNP	0301495	
KV BW08-SG08 3P-0100-PNP	0301496	
KV BW08-SG08 3P-0200-PNP	0301497	●
Clip for plug / socket		
CLI-M8	0301463	
Connection cables		
KA BG08-L 3P-0300-PNP	0301622	●
KA BG08-L 3P-0500-PNP	0301623	
KA BW08-L 3P-0300-PNP	0301594	
KA BW08-L 3P-0500-PNP	0301502	
RSS radio sensor system		
RSS-T2	0377710	
Sensor distributor		
V2-M8	0301775	●
V4-M8	0301746	
V8-M8	0301751	

ⓘ Two sensors (closer/S) are required for each unit, plus extension cables as an option. Please note the minimum permitted bending radii for the sensor cables, which are generally 35 mm.

MMS PI1 programmable magnetic switches

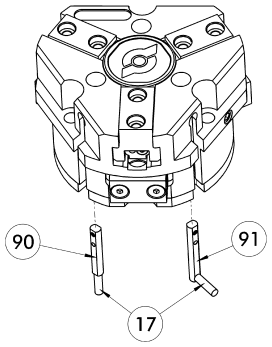

(17) Cable outlet
(91) MMS 22...-PI1-...-SA sensor
(90) MMS 22...-PI1-... sensor

Position query with one programmable position per sensor and electronics integrated in sensor. Programmable via MT magnet teaching tool (included in the scope of delivery) or ST plug teaching tool (optional). Limit position query mounted in C-groove. If the ST plug teaching tools are listed in the table, teaching can only take place with the ST plug teaching tools.

Description	ID	Often combined
MMS PI1 programmable magnetic switches		
MMS 22-PI1-S-M8-PNP	0301160	●
MMSK 22-PI1-S-PNP	0301162	
MMS PI1-HD programmable magnetic switches with stainless steel housing		
MMS 22-PI1-S-M8-PNP-HD	0301110	●
MMSK 22-PI1-S-PNP-HD	0301112	
MMS PI1 programmable magnetic switches with lateral cable outlet		
MMS 22-PI1-S-M8-PNP-SA	0301166	●
MMSK 22-PI1-S-PNP-SA	0301168	

ⓘ Two sensors (closer/S) are required for each unit, plus extension cables as an option. Please note the minimum permitted bending radii for the sensor cables, which are generally 35 mm. Connection cable, cable extensions, and sensor distributors can be found in the table for the MMS 22.

MMS PI2 programmable magnetic switches

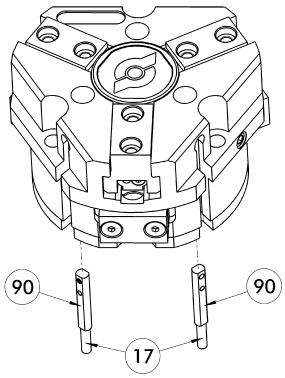

(17) Cable outlet
(90) MMS 22...-PI2-... sensor

Position query with two programmable positions per sensor and electronics integrated in sensor. Programmable via MT magnet teaching tool (included in the scope of delivery) or ST plug teaching tool (optional). Limit position query mounted in C-groove. If the ST plug teaching tools are listed in the table, teaching can only take place with the ST plug teaching tools.

Description	ID	Often combined
MMS PI2 programmable magnetic switches		
MMS 22-PI2-S-M8-PNP	0301180	●
MMSK 22-PI2-S-PNP	0301182	
MMS PI2-HD programmable magnetic switches with stainless steel housing		
MMS 22-PI2-S-M8-PNP-HD	0301130	●
MMSK 22-PI2-S-PNP-HD	0301132	

ⓘ Per unit one sensor (closer/S) is required, optionally a cable extension. Please note the minimum permitted bending radii for the sensor cables, which are generally 35 mm. Connection cable, cable extensions, and sensor distributors can be found in the table for the MMS-P 22.

MMS-P programmable magnetic switches

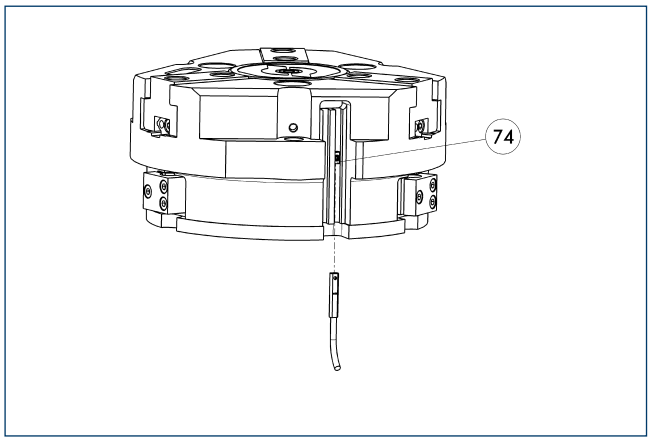

74 Stop for MMS-P

Position monitoring with two programmable positions per sensor. The end position monitoring is mounted in the C-slot.

Description	ID	Often combined
MMS-P programmable magnetic switches		
MMSK-P 22-S-PNP	0301371	
MMS-P 22-S-M8-PNP	0301370	●
Clip for plug / socket		
CLI-M8	0301463	
Connection cables		
KA BG08-L 4P-0500	0307767	●
KA BG08-L 4P-1000	0307768	
KA BW08-L 4P-0500	0307765	
KA BW08-L 4P-1000	0307766	
Sensor distributor		
V2-M8-4P-2XM8-3P	0301380	

ⓘ Per unit one sensor (closer/S) is required, optionally a cable extension. Please note the minimum permitted bending radii for the sensor cables, which are generally 35 mm.

APS-Z80 analog position sensor

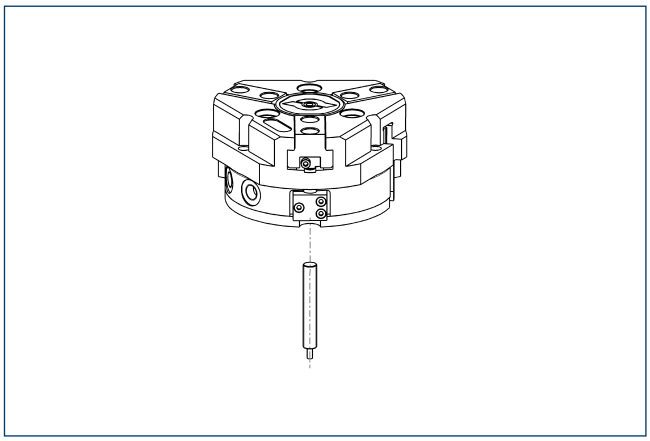

Contactlessly measuring, analog multi-position monitoring for any number of positions.

Description	ID	Often combined
Mounting kit for APS-Z80		
AS-APS-Z80-PGZN-plus 125-1	0302111	
Sensor		
APS-Z80-K	0302072	
APS-Z80-M8	0302070	●

ⓘ When using an APS system, one mounting kit (AS-APS-Z80) and one APS-Z80 sensor is required per gripper.

APS-M1 analog position sensor

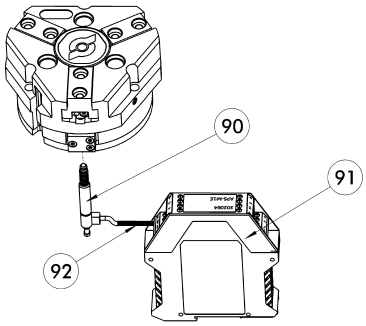

(90) APS-M1S sensor
(91) APS-M1E electronic processor
(92) APS-K extension cable

Analog multi position monitoring for any desired positions.

Description	ID	Often combined
Mounting kit for APS-M1		
AS-APS-M1-PGZN-plus 125-1	0302081	
Connection cables		
APS-K0200	0302066	●
APS-K0700	0302068	
Electronic processor		
APS-M1E	0302064	
Sensor		
APS-M1S	0302062	

ⓘ When using an APS system, for each gripper a mounting kit (AS-APS-M1), an APS-M1S sensor (incl. 3 m cable) as well as an electronics (APS-M1e) are required. An extension cable (APS-K) can be connected between the sensor and the electronics as an option. The max. cable length between the sensor and the electronics is 10 m, between the electronics and their control unit (PLC) it is max. 1 m.

Cylindrical reed switches

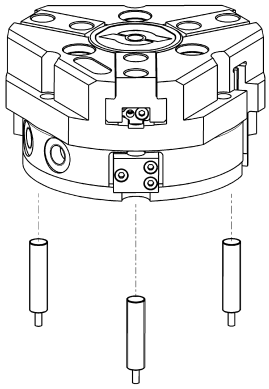

Limit position monitor can be mounted with mounting kit.

Description	ID	
Mounting kit for proximity switch		
AS-RMS 80 PGN/PZN-plus 100/125	0377726	
Reed switches		
RMS 80-S-M8	0377721	

ⓘ Two sensors (closer/S) are required for each unit, plus extension cables as an option. This mounting kit needs to be ordered optionally as an accessory. Two mounting kits are required per gripper. Please note the minimum permitted bending radii for the sensor cables, which are generally 35 mm.

JGZ 160

SCHUNK Grippers pneumatic | 3-Finger Centric Grippers | Universal Gripper

Gripping force, O.D. gripping

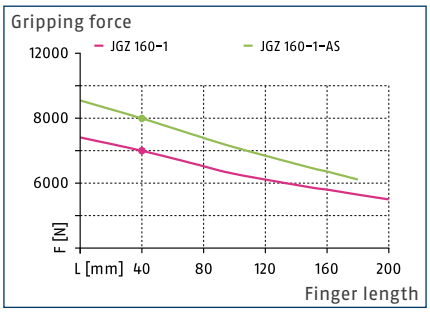

Gripping force, I.D. gripping

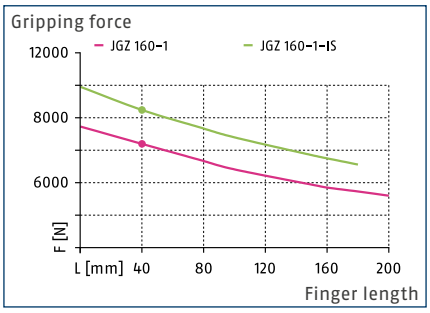

Finger load

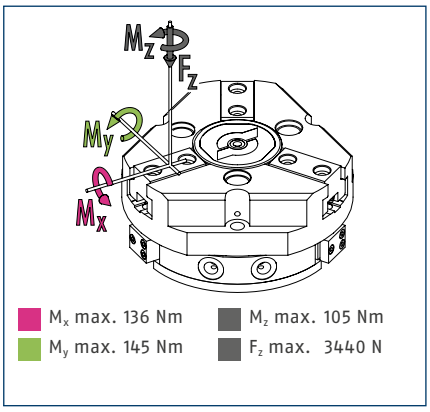

ⓘ The indicated moments and forces are static values, apply per base jaw and may occur simultaneously. M_y may arise in addition to the moment generated by the gripping force itself. If the max. permitted finger weight is exceeded, it is impreative to throttle the air supply so that the jaw movement occurs without any hitting or bouncing. Service life may be reduced.

Technical data

Description		JGZ 160-1	JGZ 160-1-AS	JGZ 160-1-IS
ID		0308960	0308961	0308962
Stroke per jaw	[mm]	16	16	16
Closing- / opening force	[N]	6000/6390	7990/-	-/8480
min. spring force	[N]		1990	2090
Weight	[kg]	5.6	8	8
Recommended workpiece weight	[kg]	30	30	30
Fluid consumption per double stroke	[cm³]	520	520	520
min. / max. operating pressure	[bar]	2/8	4/6.5	4/6.5
Nominal operating pressure	[bar]	6	6	6
Closing- / opening time	[s]	0.5/0.5	0.4/0.8	0.8/0.4
Closing- / opening time only with spring	[s]		0.80	0.80
max. permitted finger length	[mm]	200	180	180
max. permitted weight per finger	[kg]	3.5	3.5	3.5
IP class		40	40	40
min. / max. ambient temperature	[°C]	5/90	5/90	5/90
Repeat accuracy	[mm]	0.02	0.02	0.02
Cleanroom class ISO 14644-1		5	5	5

Main view

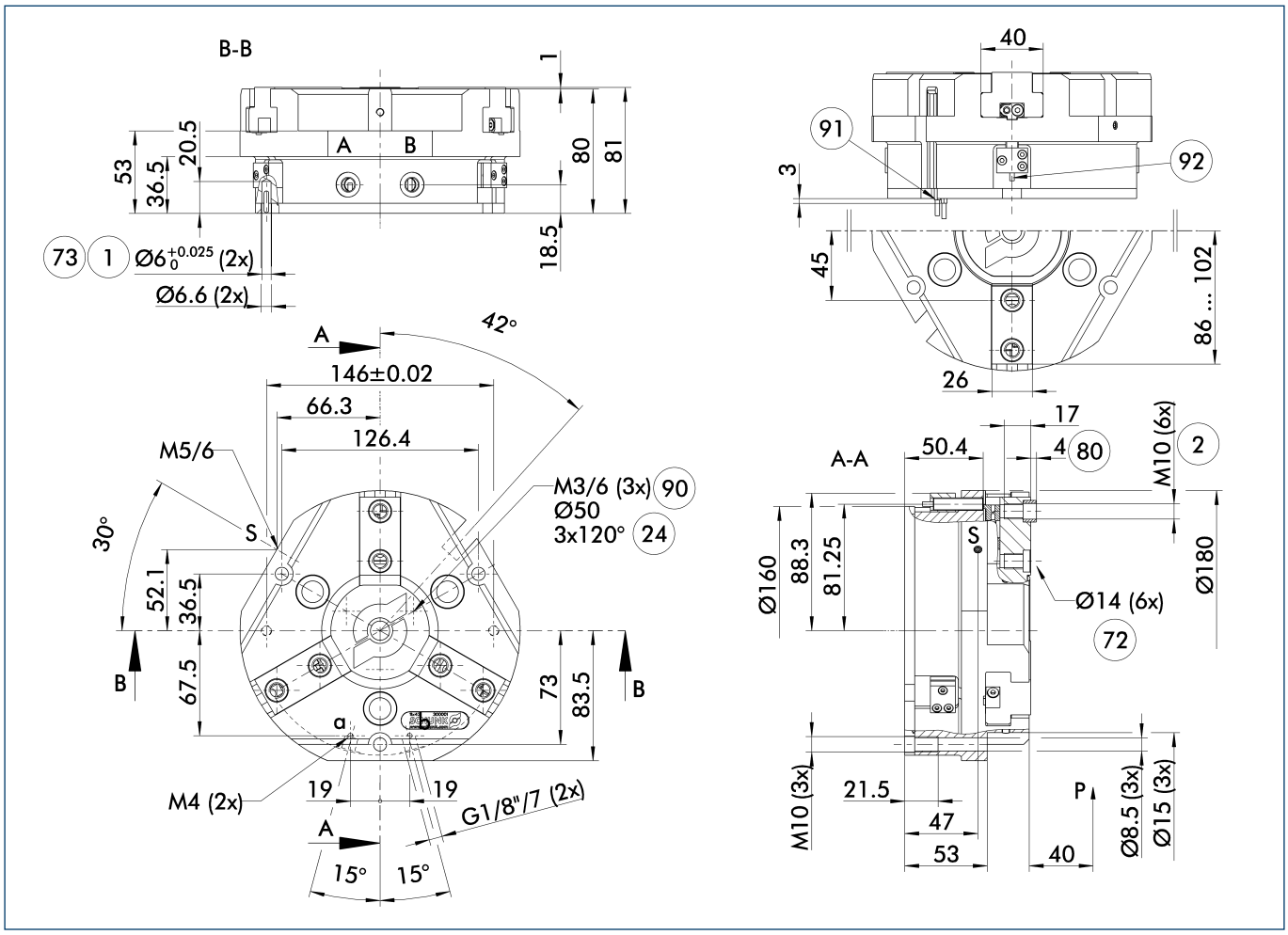

The drawing shows the gripper in the basic version with closed jaws, without dimensional consideration of the options described below.

ⓘ The SDV-P pressure maintenance valve can also be used for I.D. or O.D. gripping alternatively or in addition to the spring-loaded, mechanical gripping force maintenance device (see catalog section on "Accessories").

A, a Main / direct connection, gripper opening

B, b Main / direct connection, gripper closing

S Air purge connection (0.5 ... 1 bar)

(1) Gripper connection

(2) Finger connection

(24) Bolt circle

(72) Fit for centering sleeves

(73) Fit for centering pins

(80) Depth of the centering sleeve hole in the mating part

(90) Thread below the cover for fastening external attachments

(91) MMS 22... sensor

(92) IN ... sensor

Hose-free direct connection M4

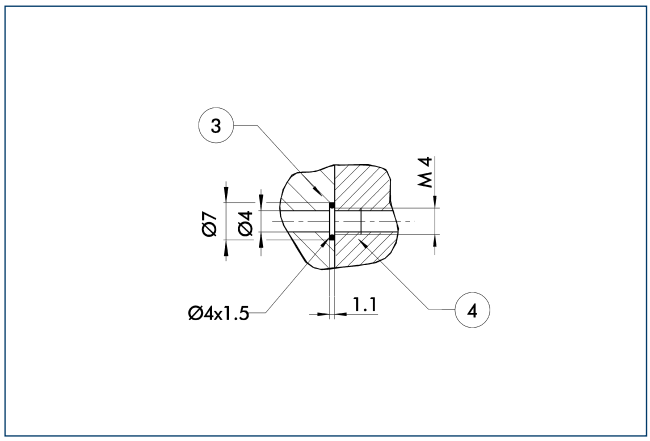

(3) Adapter (4) Gripper

The direct connection is used for supplying compressed air without hoses. Instead, the pressure medium is fed through bore-holes in the mounting plate.

Gripping force maintenance device AS / IS

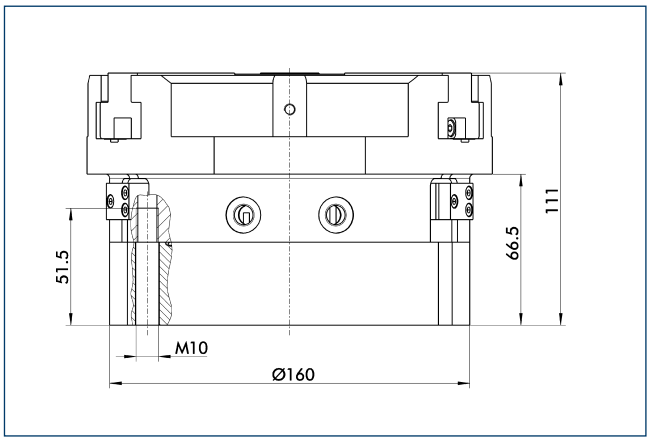

The mechanical maintenance of gripping force also assures a minimum gripping force in the case of a loss of pressure. With the AS / S variant, this acts as a closing force, and as an opening force for the IS variant. The maintenance of gripping force element can also be used as a means for increasing gripping force or for single actuated gripping.

Spring-loaded pressure piece

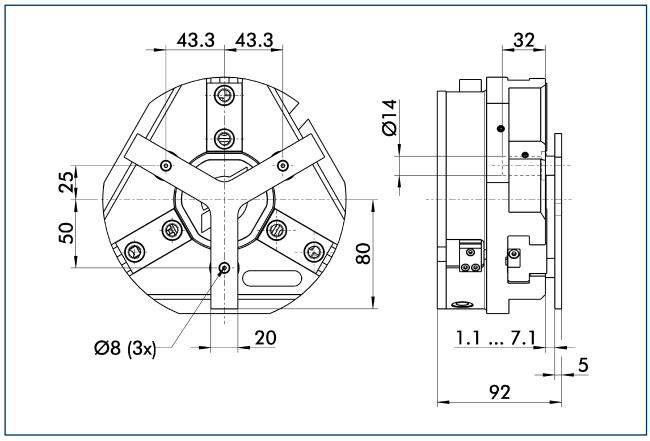

For spring-supported positioning of the workpiece against a stop after the gripper has opened. Especially developed for loading machines.

Description	ID	Stroke [mm]	Min. force [N]
Spring-loaded pressure piece			
A-PZN-plus/DPZ-plus 160	0303724	6	205

SDV-P pressure maintenance valve

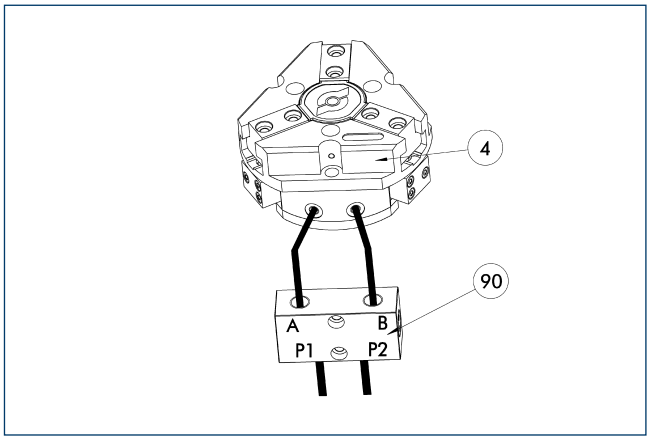

(4) Gripper (90) SDV-P pressure maintenance valve

The SDV-P pressure maintenance valves ensure that the pressure in the piston chamber of pneumatic gripping, rotary, linear, and quick-change modules is maintained temporarily during an emergency stop.

Description	ID	
Pressure maintenance valve		
SDV-P 04	0403130	

BSWS jaw quick-change systems

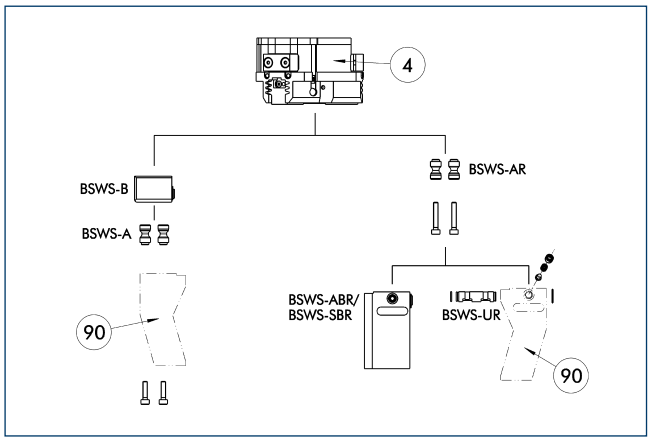

(4) Gripper
(90) Customized gripper fingers

Different jaw quick-change systems are available for this gripper. For more detailed information please see the relevant product chapters in the catalog.

Description	ID	
Jaw quick-change system adapter		
BSWS-AR 160	0300096	
BSWS-A 160	0303030	
Jaw quick-change system base		
BSWS-B 160	0303031	
Finger blanks with jaw quick-change system		
BSWS-ABR-PGZN-plus 160	0300076	
BSWS-SBR-PGZN-plus 160	0300086	
Jaw quick-change system reversed		
BSWS-UR 160	0302995	

ⓘ Only the systems listed in the table can be used.

ZBA L-plus 160 intermediate jaws

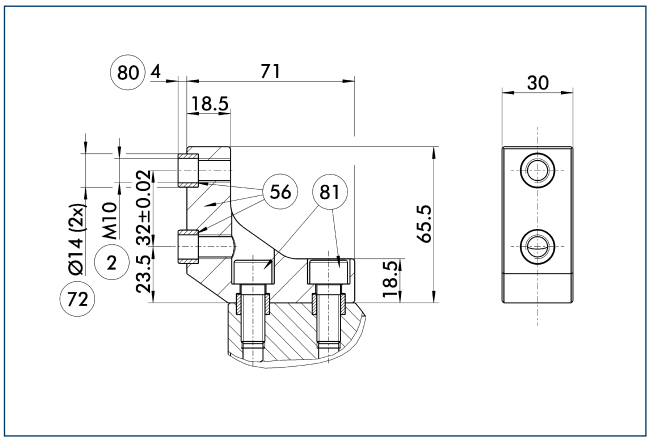

(2) Finger connection
(56) Included in delivery
(72) Fit for centering sleeves
(80) Depth of the centering sleeve hole in the mating part
(81) Not included in the scope of delivery

Optionally intermediate jaws can be used, enabling direct connection and alignment of top jaws and various standard accessories in Z-direction.

Description	ID	Material	Scope of delivery
Intermediate jaws			
ZBA-L-plus 160	0311762	Aluminum	1

UZB 160 universal intermediate jaw

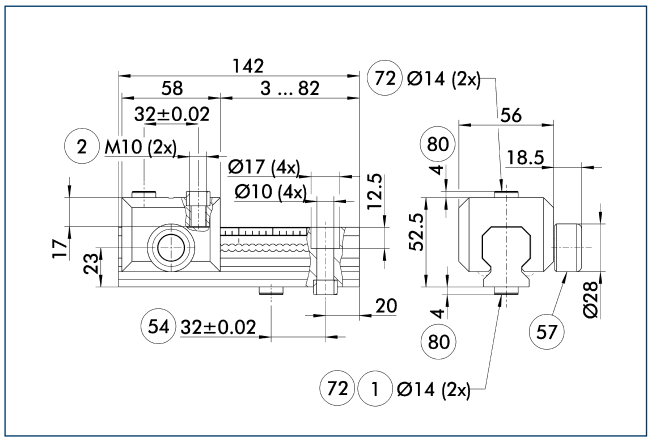

1 Gripper connection
2 Finger connection
54 Optional right or left connection
57 Locking
72 Fit for centering sleeves
80 Depth of the centering sleeve hole in the mating part

The universal intermediate jaw allows fast tool-free and reliable plugging and shifting of top jaws at the gripper.

Description	ID	Grid dimension [mm]
Universal intermediate jaw		
UZB 160	0300046	4
UZB-S 160	5518274	4
Finger blanks		
ABR-PGZN-plus 160	0300014	
SBR-PGZN-plus 160	0300024	

FMS-ZBA / ZBP 160 force-measuring jaws

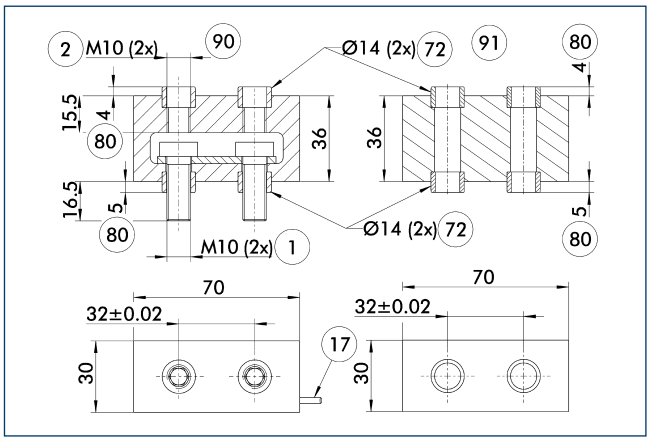

1 Gripper connection
2 Finger connection
17 Cable outlet
72 Fit for centering sleeves
80 Depth of the centering sleeve hole in the mating part
90 Active intermediate jaws
91 Passive intermediate jaws

Force measuring jaws measure gripping forces, but can also determine workpiece weights or dimensional deviations. There are active and passive intermediate jaws (FMS-ZBA or FMS-ZBP). At least one active force measuring jaw is required per gripper, the rest can be passive. For each active jaw, a FMS-A control unit and a FMS-AK connection cable are required.

Description	ID	Often combined
Active intermediate jaws		
FMS-ZBA 160	0301840	
Passive intermediate jaws		
FMS-ZBP 160	0301841	
Connection cables		
FMS-AK0200	0301820	●
FMS-AK0500	0301821	
FMS-AK1000	0301822	
FMS-AK2000	0301823	
Electronic processor		
FMS-A2	0301811	

ABR- / SBR-PGZN-plus 160 finger blanks

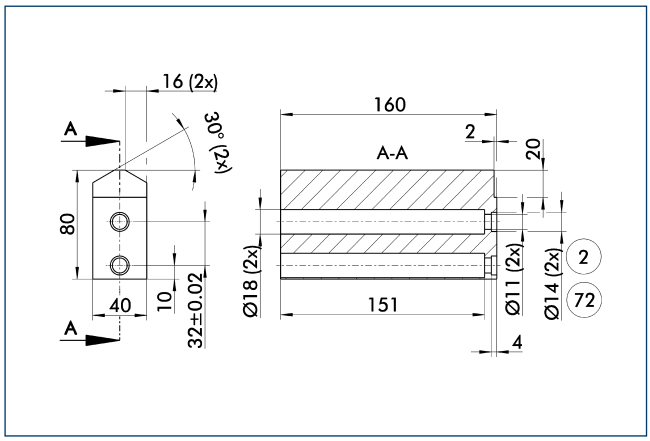

(2) Finger connection (72) Fit for centering sleeves

Finger blanks for customized subsequent machining.

Description	ID	Material	Scope of delivery
Finger blanks			
ABR-PGZN-plus 160	0300014	Aluminum	1
SBR-PGZN-plus 160	0300024	16MnCr5	1

Inductive proximity switches

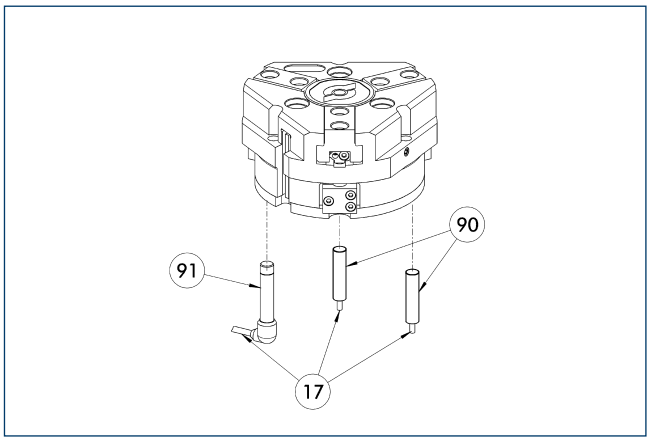

(17) Cable outlet (91) IN ...-SA sensor
(90) IN ... sensor

Directly mounted limit position monitor.

Description	ID	Often combined
Inductive proximity switches		
IN 80-S-M12	0301578	
IN 80-S-M8	0301478	●
INK 80-S	0301550	
Inductive proximity switches with lateral outlet		
IN 80-S-M12-SA	0301587	
INK 80-S-SA	0301566	
Cable extensions		
KV BG12-SG12 3P-0030-PNP	0301999	
KV BG12-SG12 3P-0060-PNP	0301998	
KV BW08-SG08 3P-0030-PNP	0301495	
KV BW08-SG08 3P-0100-PNP	0301496	
KV BW08-SG08 3P-0200-PNP	0301497	●
KV BW12-SG12 3P-0030-PNP	0301595	
KV BW12-SG12 3P-0100-PNP	0301596	
KV BW12-SG12 3P-0200-PNP	0301597	
Clip for plug / socket		
CLI-M12	0301464	
CLI-M8	0301463	
Connection cables		
KA BG08-L 3P-0300-PNP	0301622	●
KA BG08-L 3P-0500-PNP	0301623	
KA BG12-L 3P-0500-PNP	30016369	
KA BW08-L 3P-0300-PNP	0301594	
KA BW08-L 3P-0500-PNP	0301502	
KA BW12-L 3P-0300-PNP	0301503	
KA BW12-L 3P-0500-PNP	0301507	
Sensor distributor		
V2-M8	0301775	●
V2-M12	0301776	●
V4-M12	0301747	
V4-M8	0301746	
V8-M12	0301752	

ⓘ Two sensors (closer/S) are required for each unit, plus extension cables as an option. Please note the minimum permitted bending radii for the sensor cables, which are generally 35 mm.

Flexible position sensor

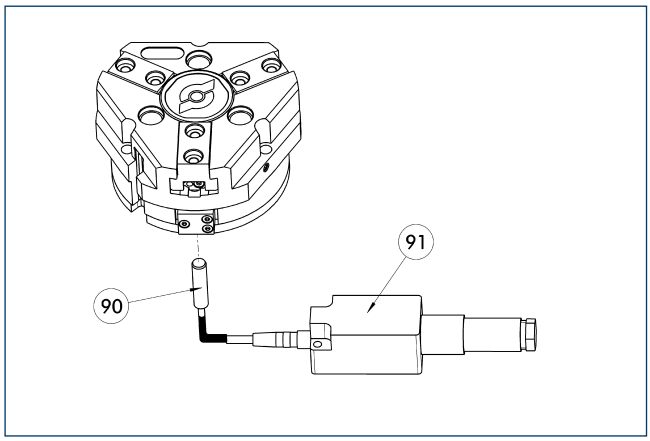

90 FPS-S sensor

91 FPS-F5 / -F5 T electronic processor

Flexible position monitoring of up to five positions.

Description	ID	Often combined
Mounting kit for FPS		
AS-FPS-PGZN-plus 160-1	0301638	
Electronic processor		
FPS-F5	0301805	●
FPS-F5 T	0301807	
Sensor		
FPS-S M8	0301704	
Clip for plug / socket		
CLI-M8	0301463	

ⓘ When using a FPS system, a FPS sensor (FPS-S) and a control unit (FPS-F5 / F5 T) are required for each gripper as well as a mounting kit (AS), if listed. Cable extensions (KV) are available as options in the "Accessories" catalog section.

MMS electronic magnetic switches

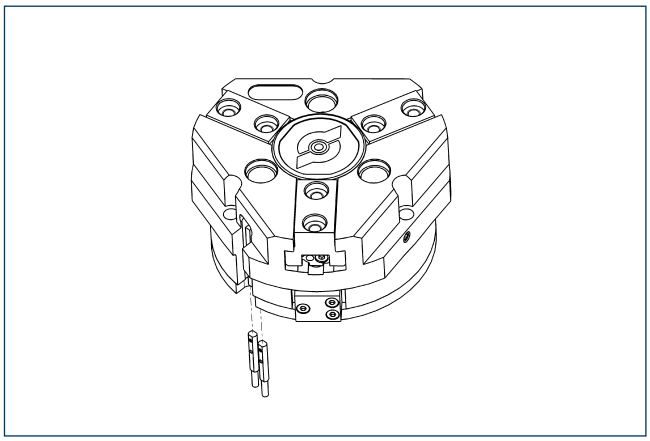

End position monitoring for mounting in the C-slot.

Description	ID	Often combined
MMS electronic magnetic switches		
MMS 22-S-M8-PNP	0301032	●
MMSK 22-S-PNP	0301034	
MMS electronic magnetic switches with lateral cable outlet		
MMS 22-S-M8-PNP-SA	0301042	●
MMSK 22-S-PNP-SA	0301044	
Reed switches		
RMS 22-S-M8	0377720	●
Cable extensions		
KV BW08-SG08 3P-0030-PNP	0301495	
KV BW08-SG08 3P-0100-PNP	0301496	
KV BW08-SG08 3P-0200-PNP	0301497	●
Clip for plug / socket		
CLI-M8	0301463	
Connection cables		
KA BG08-L 3P-0300-PNP	0301622	●
KA BG08-L 3P-0500-PNP	0301623	
KA BW08-L 3P-0300-PNP	0301594	
KA BW08-L 3P-0500-PNP	0301502	
RSS radio sensor system		
RSS-T2	0377710	
Sensor distributor		
V2-M8	0301775	●
V4-M8	0301746	
V8-M8	0301751	

ⓘ Two sensors (closer/S) are required for each unit, plus extension cables as an option. Please note the minimum permitted bending radii for the sensor cables, which are generally 35 mm.

MMS PI1 programmable magnetic switches

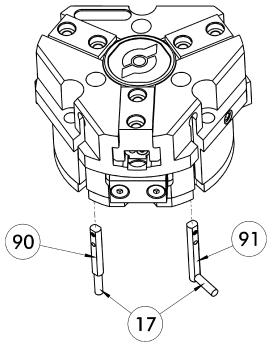

(17) Cable outlet
(91) MMS 22...-PI1-...-SA sensor
(90) MMS 22...-PI1-... sensor

Position query with one programmable position per sensor and electronics integrated in sensor. Programmable via MT magnet teaching tool (included in the scope of delivery) or ST plug teaching tool (optional). Limit position query mounted in C-groove. If the ST plug teaching tools are listed in the table, teaching can only take place with the ST plug teaching tools.

Description	ID	Often combined
Plug teaching tool		
ST-MMS 22-PI1-PNP	0301025	
MMS PI1 programmable magnetic switches		
MMS 22-PI1-S-M8-PNP	0301160	●
MMSK 22-PI1-S-PNP	0301162	
MMS PI1-HD programmable magnetic switches with stainless steel housing		
MMS 22-PI1-S-M8-PNP-HD	0301110	●
MMSK 22-PI1-S-PNP-HD	0301112	
MMS PI1 programmable magnetic switches with lateral cable outlet		
MMS 22-PI1-S-M8-PNP-SA	0301166	●
MMSK 22-PI1-S-PNP-SA	0301168	

ⓘ Two sensors (closer/S) are required for each unit, plus extension cables as an option. Please note the minimum permitted bending radii for the sensor cables, which are generally 35 mm. Connection cable, cable extensions, and sensor distributors can be found in the table for the MMS 22.

MMS-P programmable magnetic switches

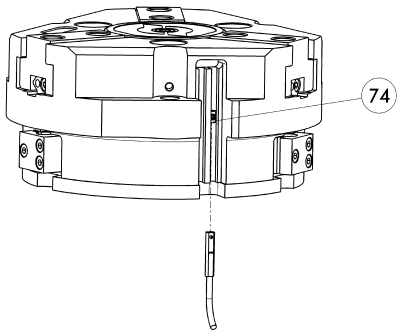

(74) Stop for MMS-P

Position monitoring with two programmable positions per sensor. The end position monitoring is mounted in the C-slot.

Description	ID	Often combined
MMS-P programmable magnetic switches		
MMSK-P 22-S-PNP	0301371	
MMS-P 22-S-M8-PNP	0301370	●
Clip for plug / socket		
CLI-M8	0301463	
Connection cables		
KA BG08-L 4P-0500	0307767	●
KA BG08-L 4P-1000	0307768	
KA BW08-L 4P-0500	0307765	
KA BW08-L 4P-1000	0307766	
Sensor distributor		
V2-M8-4P-2XM8-3P	0301380	

ⓘ Per unit one sensor (closer/S) is required, optionally a cable extension. Please note the minimum permitted bending radii for the sensor cables, which are generally 35 mm.

APS-Z80 analog position sensor

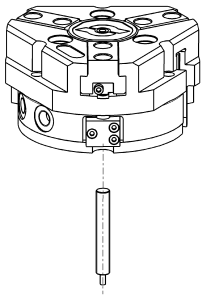

Contactlessly measuring, analog multi-position monitoring for any number of positions.

Description	ID	Often combined
Mounting kit for APS-Z80		
AS-APS-Z80-PGZN-plus 160-1/200-2/240-2	0302113	
Sensor		
APS-Z80-K	0302072	
APS-Z80-M8	0302070	●

ⓘ When using an APS system, one mounting kit (AS-APS-Z80) and one APS-Z80 sensor is required per gripper.

APS-M1 analog position sensor

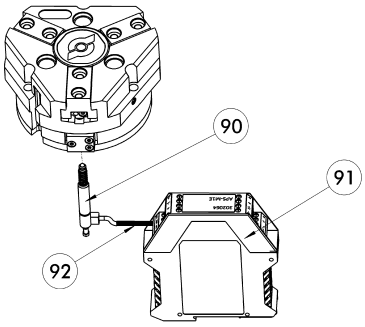

(90) APS-M1S sensor
(91) APS-M1E electronic processor
(92) APS-K extension cable

Analog multi position monitoring for any desired positions.

Description	ID	Often combined
Mounting kit for APS-M1		
AS-APS-M1-PGZN-plus 160-1/240-2	0302083	
Connection cables		
APS-K0200	0302066	●
APS-K0700	0302068	
Electronic processor		
APS-M1E	0302064	
Sensor		
APS-M1S	0302062	

ⓘ When using an APS system, for each gripper a mounting kit (AS-APS-M1), an APS-M1S sensor (incl. 3 m cable) as well as an electronics (APS-M1e) are required. An extension cable (APS-K) can be connected between the sensor and the electronics as an option. The max. cable length between the sensor and the electronics is 10 m, between the electronics and their control unit (PLC) it is max. 1 m.

Cylindrical reed switches

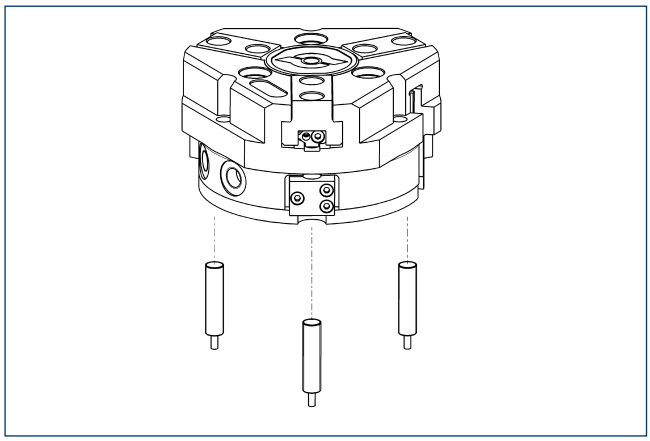

Limit position monitor can be mounted with mounting kit.

Description	ID	
Mounting kit for proximity switch		
AS-RMS 80 PGN/PZN-plus 160-380	0377727	
Reed switches		
RMS 80-S-M8	0377721	

ⓘ Two sensors (closer/S) are required for each unit, plus extension cables as an option. This mounting kit needs to be ordered optionally as an accessory. Two mounting kits are required per gripper. Please note the minimum permitted bending radii for the sensor cables, which are generally 35 mm.

Flexible. Robust. Flat.

PZH-plus Long-stroke Gripper

Universal gripper with long travel and high maximum moment due to multi-tooth guidance

Field of Application

Multi-purpose due to the diverse range of accessories. Can also be used in fields of application with special requirements to the gripper (temperature, chemical resistance, dirt, and many more).

Advantages – Your benefit

Robust multi-tooth guidance for precise handling

High maximum moments possible suitable for using long gripper fingers

Sensitive gripping for the handling or large, sensitive workpieces

Air supply via hose-free direct connection or screw connections for flexible pressure supply in all automated systems

Comprehensive sensor accessory program for versatile interrogation possibilities and control of stroke position

Large stroke for a flexible range of parts

Flat design for few interfering contours

Center through-hole for feed-through of workpieces, supply hoses, sensor systems, optical workpiece recognition systems, etc.

Sizes	Weight	Gripping force	Stroke per jaw	Workpiece weight
Quantity: 4	1.5 .. 33 kg	375 .. 4200 N	20 .. 75 mm	1.9 .. 22 kg

Functional Description

The base jaws form the moving cylinder housing while the cylinder pistons are fixed. The cylinder spaces are actuated with air so that the gripper is opened and closed.

The jaws are synchronized by a belt which is connected to one carrier per jaw.

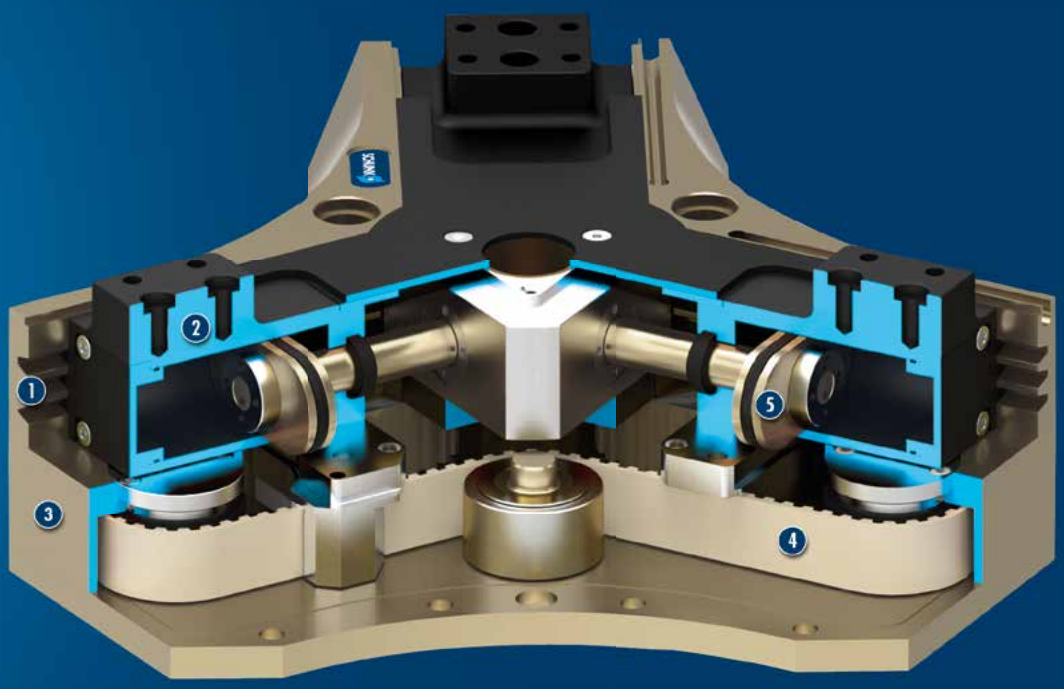

① **Multiple-tooth guidance**
High-loadable base jaw guidance with minimum play for long fingers

② **Base jaws**
for the connection of workpiece-specific gripper fingers

③ **Housing**
Weight-optimized through application of high-strength aluminum alloy

④ **Toothed belt for synchronization**
for centric gripping

⑤ **Drive**
Pneumatic oval piston for maximum driving force

CAD data, operating manuals and other current product documents are available at **www.schunk.com**

General Notes about the Series

Housing material: Aluminum alloy, anodized

Base jaw material: Steel

Actuation: pneumatic, with filtered compressed air as per DIN ISO 8573-1: 7 4 4

Warranty: 24 months (details, general terms and conditions and operating manuals can be downloaded at www.schunk.com)

Scope of delivery: Centering sleeves, O-rings for direct connection, assembly and operating manual with manufacturer's declaration

Gripping force: is the arithmetic total of the gripping force applied to each gripper jaw at distance P (see illustration).

Finger length: is measured from the upper edge of the gripper housing in the direction of the main axis. The breach of the max. permitted finger length can bring higher abrasion. The maximum permissible finger length applies up to the nominal operating pressure. With higher pressures, the finger length must be reduced proportionally to the nominal operating pressure.

Repeat accuracy: is defined as the spread of the limit position after 100 consecutive strokes.

Workpiece weight: is calculated for a force-fit connection with a coefficient of friction of 0.1 and a safety factor of 2 against slippage of the workpiece on acceleration due to gravity g. Considerably heavier workpiece weights are permitted with form-fit gripping.

Closing and opening times: are purely the times that the base jaws or fingers are in motion. Valve switching times, hose filling times or PLC reaction times are not included in the above times and must be taken into consideration when determining cycle times.

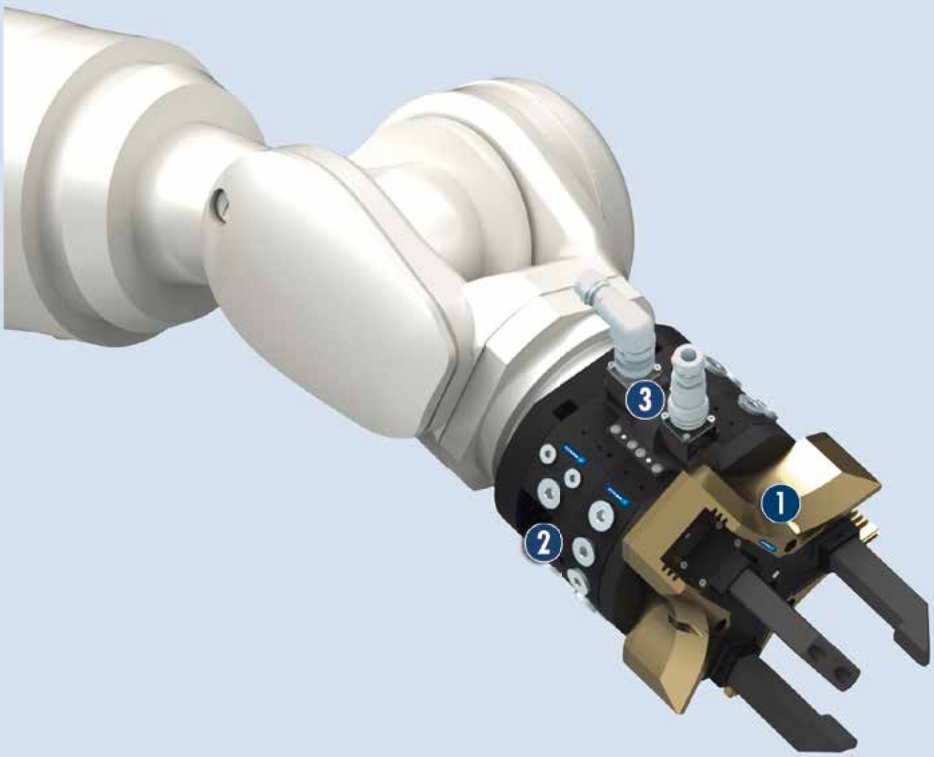

Application example

SCHUNK end-of-arm competence. Assembly unit for large, thin-walled, rotationally symmetric components.

1. PZH-plus 3-Finger Centric Gripper
2. SWS Quick-change System
3. Electric Feed-through

SCHUNK offers more ...

The following components make the product PZH-plus even more productive – the suitable addition for the highest functionality, flexibility, reliability, and controlled production.

Magnetic Switches

Inductive Proximity Switches

Sensor Cables

Sensor Distributor

ERM Electrical Rotary Module

AGE-S-XYZ Compensation Unit

SWS Quick-change System

Fittings

SRU-plus Flat Swivel Unit

SDV-P Pressure Maintenance Valve

Beta Electrical Linear Module

Gamma Linear Axis

ⓘ Further information regarding the products can be found on the following product pages or at www.schunk.com. Please contact us for further information: SCHUNK technical hotline +49-7133-103-2696

Options and special Information

Please note that the weight of the gripper fingers should be as low as possible for long-stroke grippers.

PZH-plus 20

SCHUNK Grippers pneumatic | 3-Finger Centric Grippers | Long-stroke Gripper

Gripping force, O.D. gripping

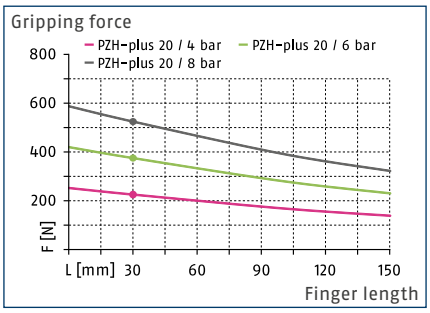

Gripping force, I.D. gripping

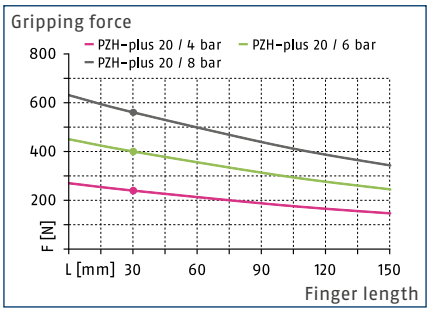

Finger load

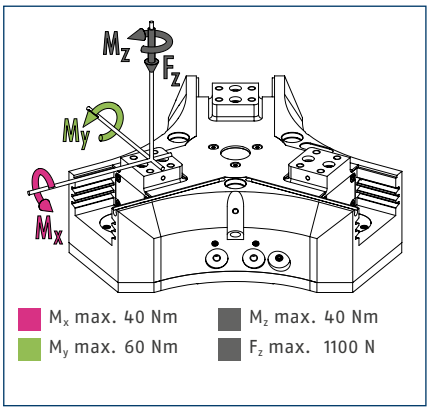

ⓘ The indicated moments and forces are static values, apply per base jaw and may occur simultaneously. M_y may arise in addition to the moment generated by the gripping force itself. If the max. permitted finger weight is exceeded, it is impreative to throttle the air supply so that the jaw movement occurs without any hitting or bouncing. Service life may be reduced.

Technical data

Description		PZH-plus 20
ID		0305360
Stroke per jaw	[mm]	20
Closing- / opening force	[N]	375/400
Weight	[kg]	1.5
Recommended workpiece weight	[kg]	1.9
Fluid consumption per double stroke	[cm³]	65
min. / max. operating pressure	[bar]	2/8
Nominal operating pressure	[bar]	6
Closing- / opening time	[s]	0.25/0.2
max. permitted finger length	[mm]	150
max. permitted weight per finger	[kg]	0.9
IP class		40
min. / max. ambient temperature	[°C]	5/90
Repeat accuracy	[mm]	0.02
Cleanroom class ISO 14644-1		5

Main view

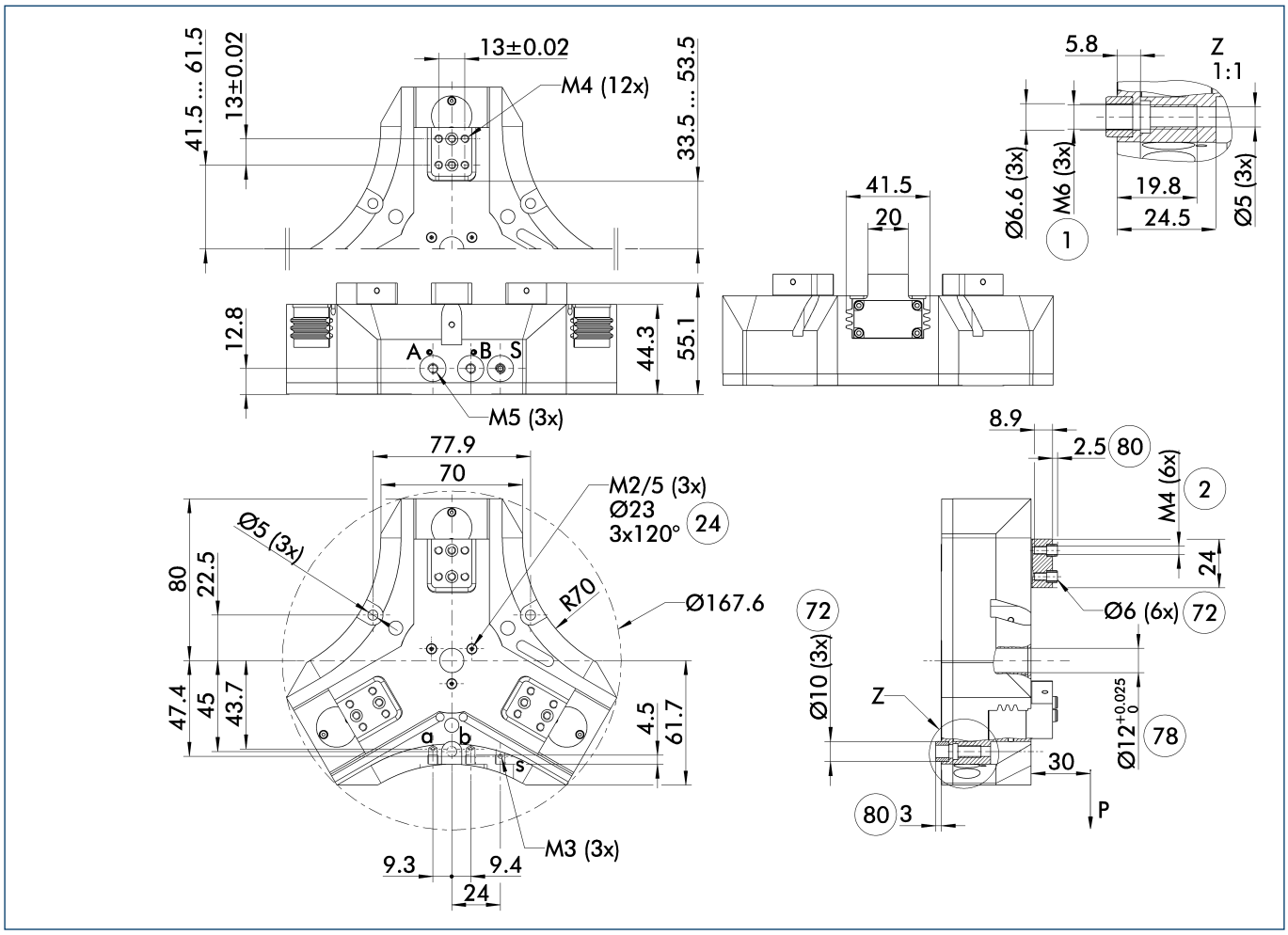

The drawing shows the gripper in the basic version with closed jaws, without dimensional consideration of the options described below.

ⓘ The SDV-P pressure maintenance valve can be used to maintain the position in the case of a loss of pressure (see "Accessories" catalog section).

A, a Main / direct connection, gripper opening

B, b Main / direct connection, gripper closing

S Air purge connection (0.5 ... 1 bar)

(1) Gripper connection

(2) Finger connection

(24) Bolt circle

(72) Fit for centering sleeves

(78) Fitting for centering

(80) Depth of the centering sleeve hole in the mating part

Hose-free direct connection M3

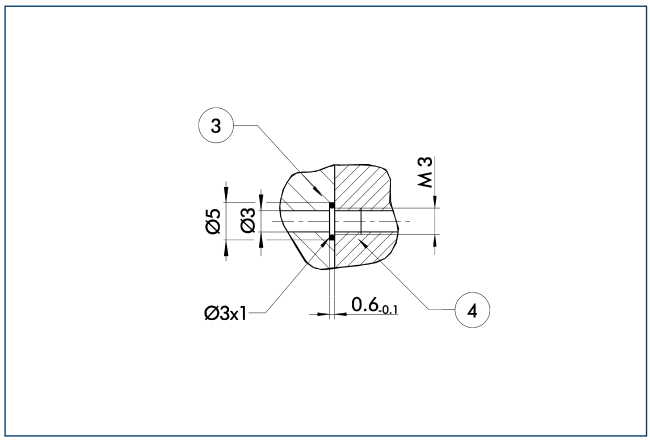

3 Adapter

4 Gripper

The direct connection is used for supplying compressed air without hoses. Instead, the pressure medium is fed through bore-holes in the mounting plate.

Spring-loaded pressure piece

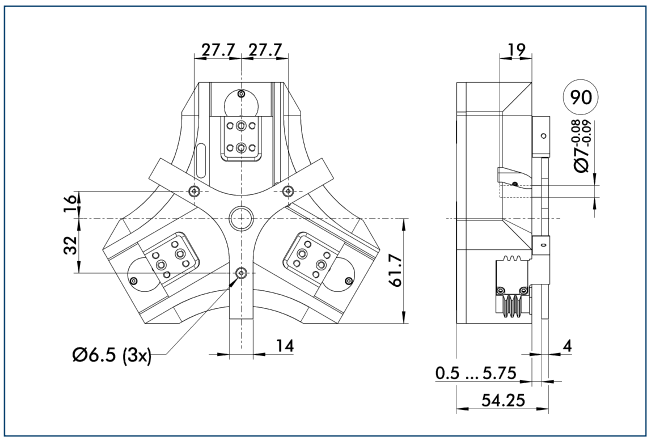

90 Guide pin

For spring-supported positioning of the workpiece against a stop after the gripper has opened. Especially developed for loading machines.

Description	ID	Stroke [mm]	Min. force [N]
Spring-loaded pressure piece			
A-PZH-plus 20	0305363	5	14

SDV-P pressure maintenance valve

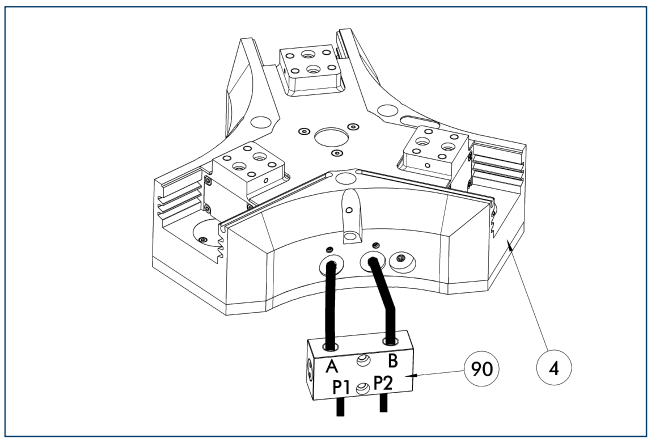

4 Gripper

90 SDV-P pressure maintenance valve

The SDV-P pressure maintenance valves ensure that the pressure in the piston chamber of pneumatic gripping, rotary, linear, and quick-change modules is maintained temporarily during an emergency stop.

Description	ID	
Pressure maintenance valve		
SDV-P 04	0403130	

Mounting kit for IN 80 proximity switches

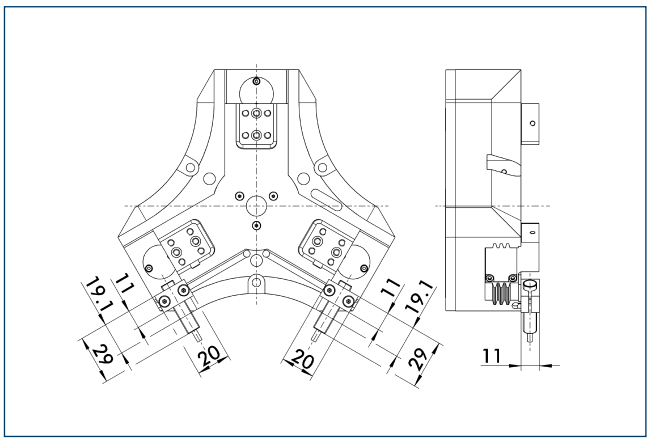

The mounting kit comprises mount, switching lug / cam and mounting screws. Proximity switches must be ordered separately.

Description	ID	
Mounting kit for proximity switch		
AS-IN80-PZH-plus 20-50	0305364	

ⓘ This mounting kit needs to be ordered optionally as an accessory.

Inductive proximity switches

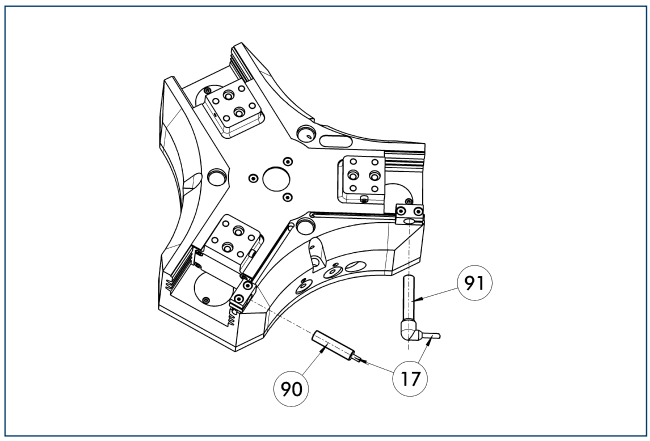

(17) Cable outlet
(91) IN ...-SA sensor
(90) IN ... sensor

Limit position monitor can be mounted with mounting kit.

Description	ID	Often combined
Mounting kit for proximity switch		
AS-IN80-PZH-plus 20-50	0305364	
Inductive proximity switches		
IN 80-S-M12	0301578	
IN 80-S-M8	0301478	●
IN-C 80-S-M8	0301475	
INK 80-S	0301550	
INK 80-SL	0301579	
Inductive proximity switches with lateral outlet		
IN 80-S-M12-SA	0301587	
IN 80-S-M8-SA	0301483	●
INK 80-S-SA	0301566	
Cable extensions		
KV BG12-SG12 3P-0030-PNP	0301999	
KV BG12-SG12 3P-0060-PNP	0301998	
KV BW08-SG08 3P-0030-PNP	0301495	
KV BW08-SG08 3P-0100-PNP	0301496	
KV BW08-SG08 3P-0200-PNP	0301497	●
KV BW12-SG12 3P-0030-PNP	0301595	
KV BW12-SG12 3P-0100-PNP	0301596	
KV BW12-SG12 3P-0200-PNP	0301597	
Clip for plug / socket		
CLI-M12	0301464	
CLI-M8	0301463	
Connection cables		
KA BG08-L 3P-0300-PNP	0301622	●
KA BG08-L 3P-0500-PNP	0301623	
KA BG12-L 3P-0500-PNP	30016369	
KA BW08-L 3P-0300-PNP	0301594	
KA BW08-L 3P-0500-PNP	0301502	
KA BW12-L 3P-0300-PNP	0301503	
KA BW12-L 3P-0500-PNP	0301507	
Sensor distributor		
V2-M12	0301776	●
V2-M8	0301775	●

ⓘ Two sensors (closer/S) are required for each unit, plus extension cables as an option. This mounting kit needs to be ordered optionally as an accessory. Please note the minimum permitted bending radii for the sensor cables, which are generally 35 mm.

MMS electronic magnetic switches

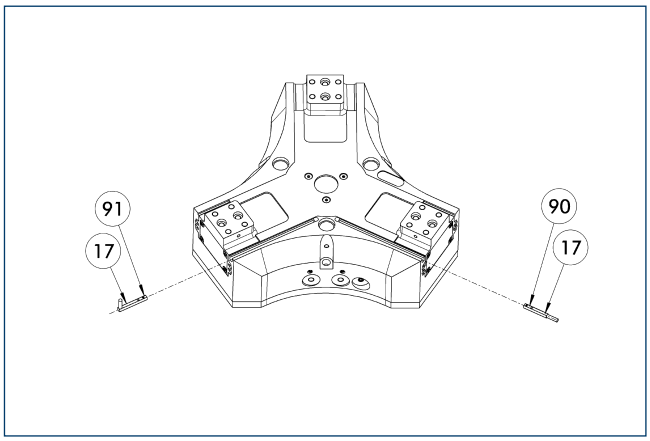

(17) Cable outlet
(91) MMS 22...-SA sensor
(90) MMS 22... sensor

End position monitoring for mounting in the C-slot.

Description	ID	Often combined
MMS electronic magnetic switches		
MMS 22-S-M8-PNP	0301032	●
MMSK 22-S-PNP	0301034	
MMS electronic magnetic switches with lateral cable outlet		
MMS 22-S-M8-PNP-SA	0301042	●
MMSK 22-S-PNP-SA	0301044	
Cable extensions		
KV BW08-SG08 3P-0030-PNP	0301495	
KV BW08-SG08 3P-0100-PNP	0301496	
KV BW08-SG08 3P-0200-PNP	0301497	●
Clip for plug / socket		
CLI-M8	0301463	
Connection cables		
KA BG08-L 3P-0300-PNP	0301622	●
KA BG08-L 3P-0500-PNP	0301623	
KA BW08-L 3P-0300-PNP	0301594	
KA BW08-L 3P-0500-PNP	0301502	
Sensor distributor		
V2-M8	0301775	●
V4-M8	0301746	
V8-M8	0301751	

ⓘ Two sensors (closer/S) are required for each unit, plus extension cables as an option. Please note the minimum permitted bending radii for the sensor cables, which are generally 35 mm.

MMS PI1 programmable magnetic switches

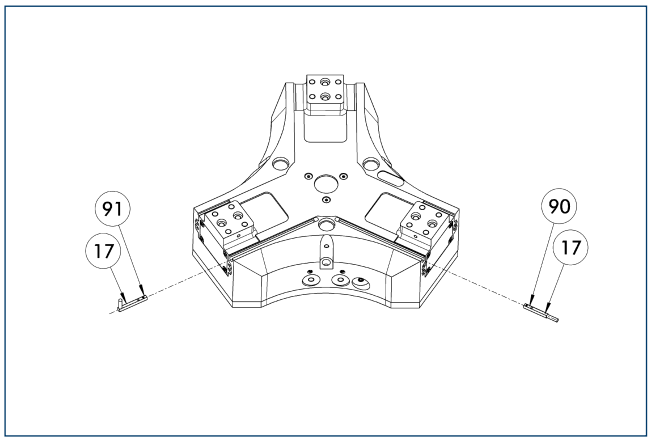

(17) Cable outlet
(91) MMS 22...-PI1-...-SA sensor
(90) MMS 22...-PI1-... sensor

Position query with one programmable position per sensor and electronics integrated in sensor. Programmable via MT magnet teaching tool (included in the scope of delivery) or ST plug teaching tool (optional). Limit position query mounted in C-groove. If the ST plug teaching tools are listed in the table, teaching can only take place with the ST plug teaching tools.

Description	ID	Often combined
MMS PI1 programmable magnetic switches		
MMS 22-PI1-S-M8-PNP	0301160	●
MMSK 22-PI1-S-PNP	0301162	
MMS PI1-HD programmable magnetic switches with stainless steel housing		
MMS 22-PI1-S-M8-PNP-HD	0301110	●
MMSK 22-PI1-S-PNP-HD	0301112	
MMS PI1 programmable magnetic switches with lateral cable outlet		
MMS 22-PI1-S-M8-PNP-SA	0301166	●
MMSK 22-PI1-S-PNP-SA	0301168	

ⓘ Two sensors (closer/S) are required for each unit, plus extension cables as an option. Please note the minimum permitted bending radii for the sensor cables, which are generally 35 mm. Connection cable, cable extensions, and sensor distributors can be found in the table for the MMS 22.

MMS PI2 programmable magnetic switches

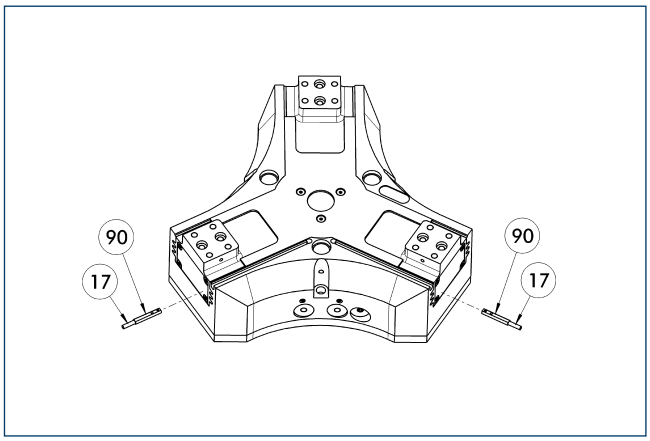

(17) Cable outlet
(90) MMS 22...-PI2-... sensor

Position query with two programmable positions per sensor and electronics integrated in sensor. Programmable via MT magnet teaching tool (included in the scope of delivery) or ST plug teaching tool (optional). Limit position query mounted in C-groove. If the ST plug teaching tools are listed in the table, teaching can only take place with the ST plug teaching tools.

Description	ID	Often combined
MMS PI2 programmable magnetic switches		
MMS 22-PI2-S-M8-PNP	0301180	●
MMSK 22-PI2-S-PNP	0301182	
MMS PI2-HD programmable magnetic switches with stainless steel housing		
MMS 22-PI2-S-M8-PNP-HD	0301130	●
MMSK 22-PI2-S-PNP-HD	0301132	

ⓘ Per unit one sensor (closer/S) is required, optionally a cable extension. Please note the minimum permitted bending radii for the sensor cables, which are generally 35 mm. Connection cable, cable extensions, and sensor distributors can be found in the table for the MMS-P 22.

MMS-P programmable magnetic switches

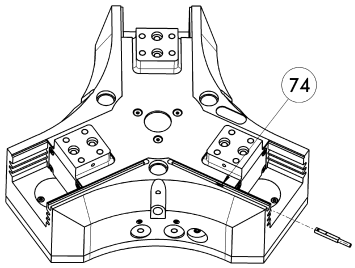

74 Stop for MMS-P

Position monitoring with two programmable positions per sensor. The end position monitoring is mounted in the C-slot.

Description	ID	Often combined
MMS-P programmable magnetic switches		
MMSK-P 22-S-PNP	0301371	
MMS-P 22-S-M8-PNP	0301370	●
Clip for plug / socket		
CLI-M8	0301463	
Connection cables		
KA BG08-L 4P-0500	0307767	●
KA BG08-L 4P-1000	0307768	
KA BW08-L 4P-0500	0307765	
KA BW08-L 4P-1000	0307766	
Sensor distributor		
V2-M8-4P-2XM8-3P	0301380	

ⓘ Per unit one sensor (closer/S) is required, optionally a cable extension. Please note the minimum permitted bending radii for the sensor cables, which are generally 35 mm.

PZH-plus 30

SCHUNK Grippers pneumatic | 3-Finger Centric Grippers | Long-stroke Gripper

Gripping force, O.D. gripping

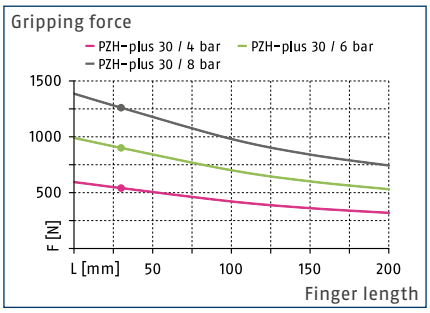

Gripping force, I.D. gripping

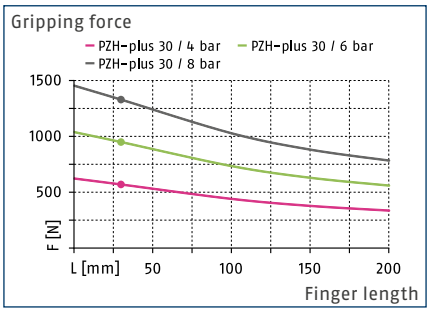

Finger load

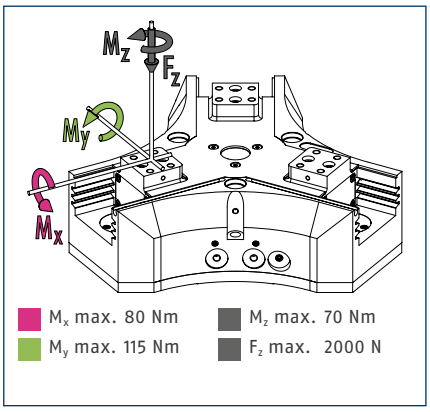

ⓘ The indicated moments and forces are static values, apply per base jaw and may occur simultaneously. M_y may arise in addition to the moment generated by the gripping force itself. If the max. permitted finger weight is exceeded, it is impreative to throttle the air supply so that the jaw movement occurs without any hitting or bouncing. Service life may be reduced.

Technical data

Description		PZH-plus 30
ID		0305370
Stroke per jaw	[mm]	30
Closing- / opening force	[N]	900/950
Weight	[kg]	3.9
Recommended workpiece weight	[kg]	4.5
Fluid consumption per double stroke	[cm³]	175
min. / max. operating pressure	[bar]	2/8
Nominal operating pressure	[bar]	6
Closing- / opening time	[s]	0.25/0.2
max. permitted finger length	[mm]	200
max. permitted weight per finger	[kg]	1.9
IP class		40
min. / max. ambient temperature	[°C]	5/90
Repeat accuracy	[mm]	0.02
Cleanroom class ISO 14644-1		5

Main view

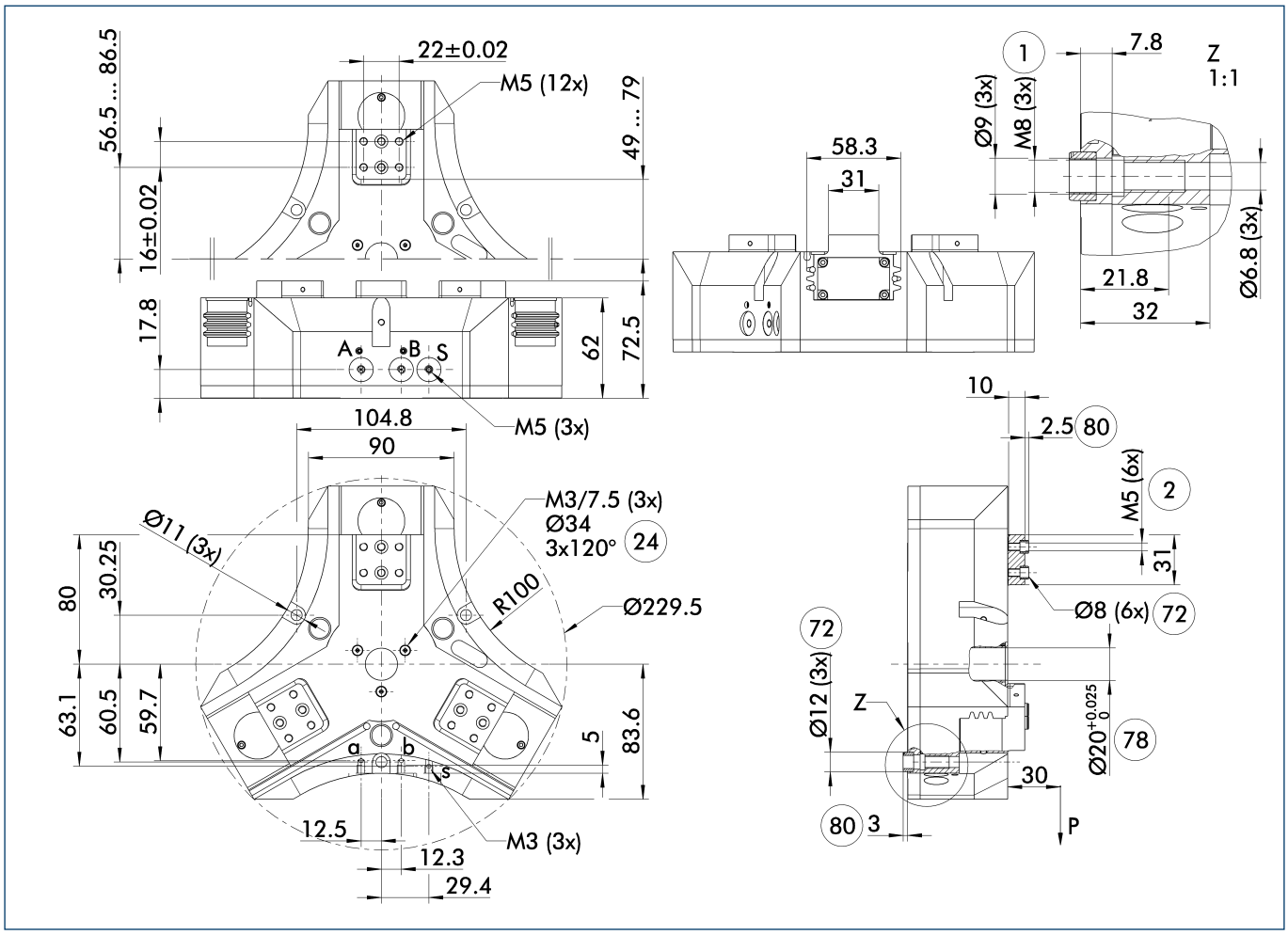

The drawing shows the gripper in the basic version with closed jaws, without dimensional consideration of the options described below.

ⓘ The SDV-P pressure maintenance valve can be used to maintain the position in the case of a loss of pressure (see "Accessories" catalog section).

A, a Main / direct connection, gripper opening

B, b Main / direct connection, gripper closing

S Air purge connection (0.5 ... 1 bar)

(1) Gripper connection

(2) Finger connection

(24) Bolt circle

(72) Fit for centering sleeves

(78) Fitting for centering

(80) Depth of the centering sleeve hole in the mating part

Hose-free direct connection M3

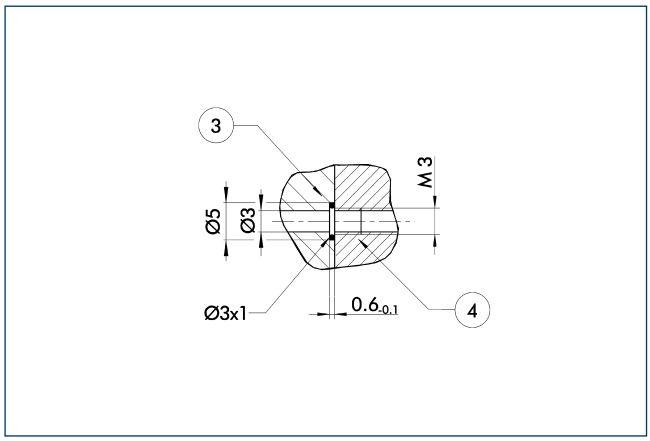

(3) Adapter (4) Gripper

The direct connection is used for supplying compressed air without hoses. Instead, the pressure medium is fed through bore-holes in the mounting plate.

Spring-loaded pressure piece

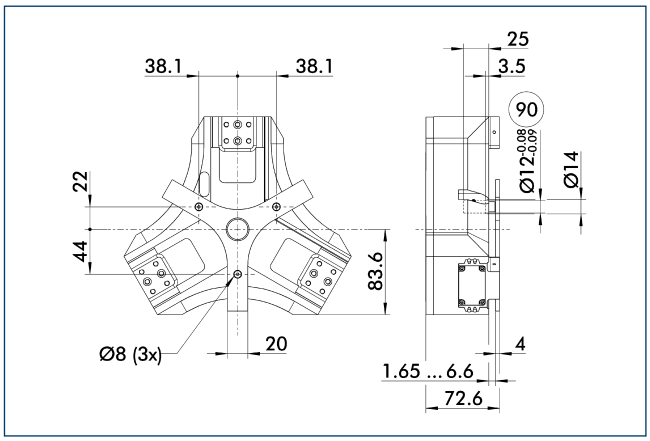

(90) Guide pin

For spring-supported positioning of the workpiece against a stop after the gripper has opened. Especially developed for loading machines.

Description	ID	Stroke [mm]	Min. force [N]
Spring-loaded pressure piece			
A-PZH-plus 30	0305373	5.5	36

SDV-P pressure maintenance valve

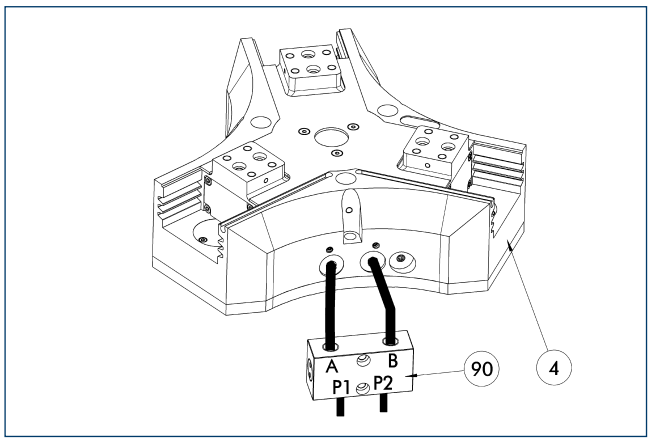

(4) Gripper (90) SDV-P pressure maintenance valve

The SDV-P pressure maintenance valves ensure that the pressure in the piston chamber of pneumatic gripping, rotary, linear, and quick-change modules is maintained temporarily during an emergency stop.

Description	ID	
Pressure maintenance valve		
SDV-P 04	0403130	

Mounting kit for IN 80 proximity switches

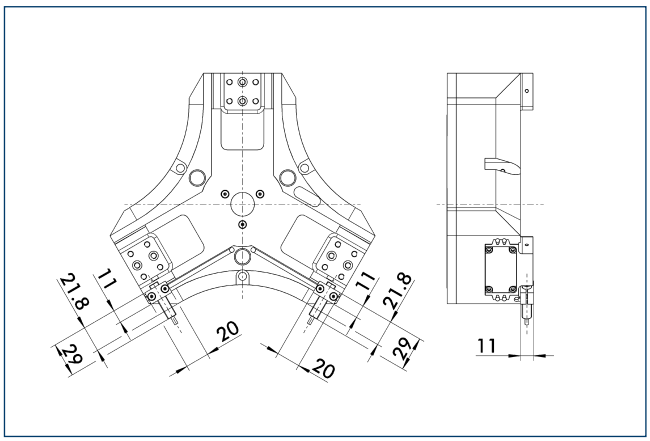

The mounting kit comprises mount, switching lug / cam and mounting screws. Proximity switches must be ordered separately.

Description	ID	
Mounting kit for proximity switch		
AS-IN80-PZH-plus 20-50	0305364	

ⓘ This mounting kit needs to be ordered optionally as an accessory.

Inductive proximity switches

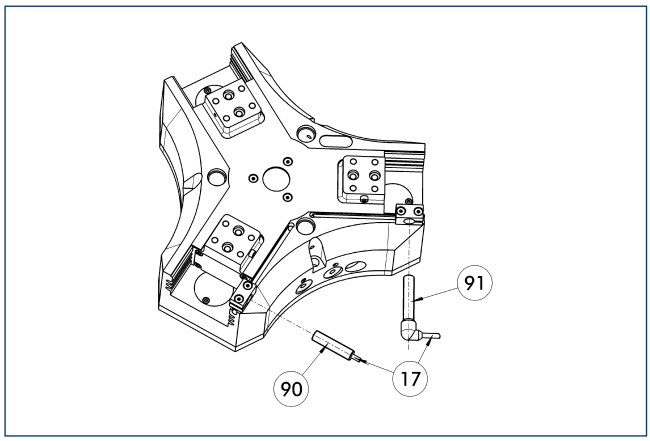

(17) Cable outlet
(91) IN ...-SA sensor
(90) IN ... sensor

Limit position monitor can be mounted with mounting kit.

Description	ID	Often combined
Mounting kit for proximity switch		
AS-IN80-PZH-plus 20-50	0305364	
Inductive proximity switches		
IN 80-S-M12	0301578	
IN 80-S-M8	0301478	●
IN-C 80-S-M8	0301475	
INK 80-S	0301550	
INK 80-SL	0301579	
Inductive proximity switches with lateral outlet		
IN 80-S-M12-SA	0301587	
IN 80-S-M8-SA	0301483	●
INK 80-S-SA	0301566	
Cable extensions		
KV BG12-SG12 3P-0030-PNP	0301999	
KV BG12-SG12 3P-0060-PNP	0301998	
KV BW08-SG08 3P-0030-PNP	0301495	
KV BW08-SG08 3P-0100-PNP	0301496	
KV BW08-SG08 3P-0200-PNP	0301497	●
KV BW12-SG12 3P-0030-PNP	0301595	
KV BW12-SG12 3P-0100-PNP	0301596	
KV BW12-SG12 3P-0200-PNP	0301597	
Clip for plug / socket		
CLI-M12	0301464	
CLI-M8	0301463	
Connection cables		
KA BG08-L 3P-0300-PNP	0301622	●
KA BG08-L 3P-0500-PNP	0301623	
KA BG12-L 3P-0500-PNP	30016369	
KA BW08-L 3P-0300-PNP	0301594	
KA BW08-L 3P-0500-PNP	0301502	
KA BW12-L 3P-0300-PNP	0301503	
KA BW12-L 3P-0500-PNP	0301507	
Sensor distributor		
V2-M12	0301776	●
V2-M8	0301775	●

ⓘ Two sensors (closer/S) are required for each unit, plus extension cables as an option. This mounting kit needs to be ordered optionally as an accessory. Please note the minimum permitted bending radii for the sensor cables, which are generally 35 mm.

MMS electronic magnetic switches

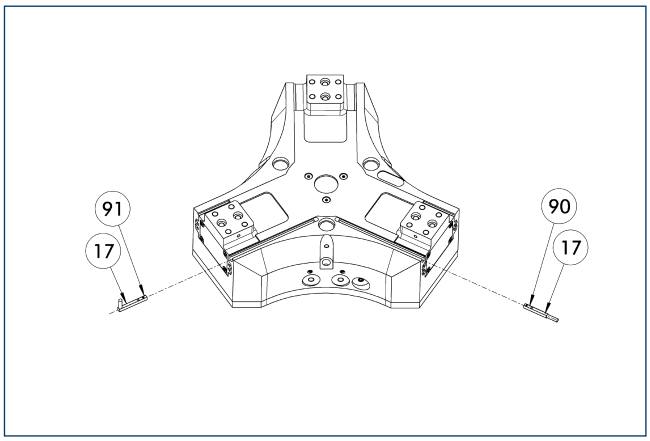

(17) Cable outlet
(91) MMS 22...-SA sensor
(90) MMS 22... sensor

End position monitoring for mounting in the C-slot.

Description	ID	Often combined
MMS electronic magnetic switches		
MMS 22-S-M8-PNP	0301032	●
MMSK 22-S-PNP	0301034	
MMS electronic magnetic switches with lateral cable outlet		
MMS 22-S-M8-PNP-SA	0301042	●
MMSK 22-S-PNP-SA	0301044	
Cable extensions		
KV BW08-SG08 3P-0030-PNP	0301495	
KV BW08-SG08 3P-0100-PNP	0301496	
KV BW08-SG08 3P-0200-PNP	0301497	●
Clip for plug / socket		
CLI-M8	0301463	
Connection cables		
KA BG08-L 3P-0300-PNP	0301622	●
KA BG08-L 3P-0500-PNP	0301623	
KA BW08-L 3P-0300-PNP	0301594	
KA BW08-L 3P-0500-PNP	0301502	
Sensor distributor		
V2-M8	0301775	●
V4-M8	0301746	
V8-M8	0301751	

ⓘ Two sensors (closer/S) are required for each unit, plus extension cables as an option. Please note the minimum permitted bending radii for the sensor cables, which are generally 35 mm.

MMS PI1 programmable magnetic switches

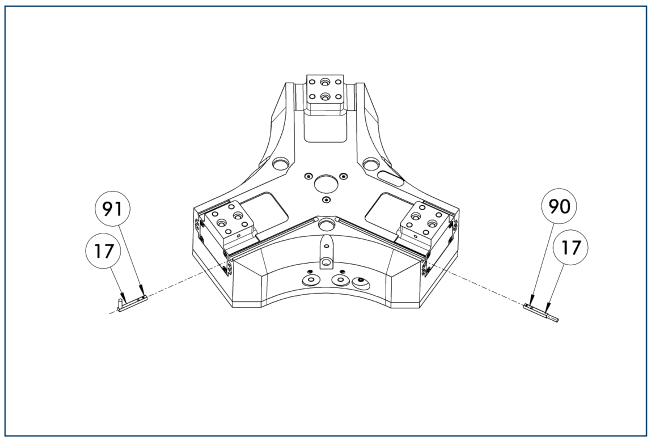

(17) Cable outlet
(91) MMS 22...-PI1-...-SA sensor
(90) MMS 22...-PI1-... sensor

Position query with one programmable position per sensor and electronics integrated in sensor. Programmable via MT magnet teaching tool (included in the scope of delivery) or ST plug teaching tool (optional). Limit position query mounted in C-groove. If the ST plug teaching tools are listed in the table, teaching can only take place with the ST plug teaching tools.

Description	ID	Often combined
MMS PI1 programmable magnetic switches		
MMS 22-PI1-S-M8-PNP	0301160	●
MMSK 22-PI1-S-PNP	0301162	
MMS PI1-HD programmable magnetic switches with stainless steel housing		
MMS 22-PI1-S-M8-PNP-HD	0301110	●
MMSK 22-PI1-S-PNP-HD	0301112	
MMS PI1 programmable magnetic switches with lateral cable outlet		
MMS 22-PI1-S-M8-PNP-SA	0301166	●
MMSK 22-PI1-S-PNP-SA	0301168	

ⓘ Two sensors (closer/S) are required for each unit, plus extension cables as an option. Please note the minimum permitted bending radii for the sensor cables, which are generally 35 mm. Connection cable, cable extensions, and sensor distributors can be found in the table for the MMS 22.

MMS PI2 programmable magnetic switches

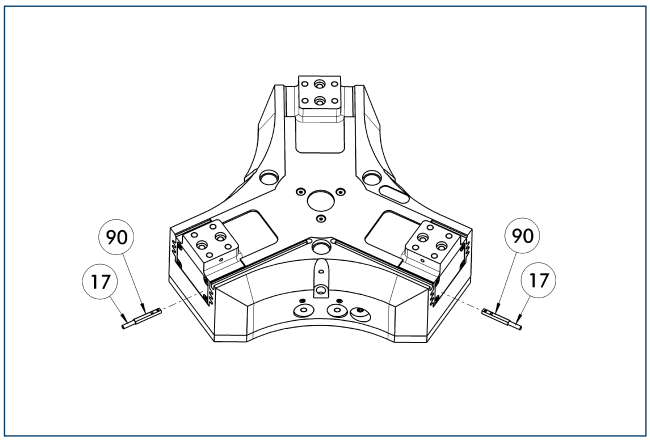

(17) Cable outlet
(90) MMS 22...-PI2-... sensor

Position query with two programmable positions per sensor and electronics integrated in sensor. Programmable via MT magnet teaching tool (included in the scope of delivery) or ST plug teaching tool (optional). Limit position query mounted in C-groove. If the ST plug teaching tools are listed in the table, teaching can only take place with the ST plug teaching tools.

Description	ID	Often combined
MMS PI2 programmable magnetic switches		
MMS 22-PI2-S-M8-PNP	0301180	●
MMSK 22-PI2-S-PNP	0301182	
MMS PI2-HD programmable magnetic switches with stainless steel housing		
MMS 22-PI2-S-M8-PNP-HD	0301130	●
MMSK 22-PI2-S-PNP-HD	0301132	

ⓘ Per unit one sensor (closer/S) is required, optionally a cable extension. Please note the minimum permitted bending radii for the sensor cables, which are generally 35 mm. Connection cable, cable extensions, and sensor distributors can be found in the table for the MMS-P 22.

MMS-P programmable magnetic switches

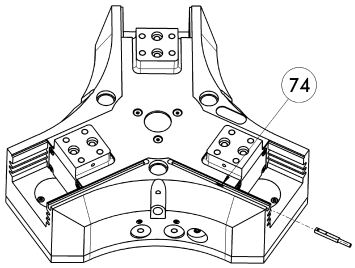

74 Stop for MMS-P

Position monitoring with two programmable positions per sensor. The end position monitoring is mounted in the C-slot.

Description	ID	Often combined
MMS-P programmable magnetic switches		
MMSK-P 22-S-PNP	0301371	
MMS-P 22-S-M8-PNP	0301370	●
Clip for plug / socket		
CLI-M8	0301463	
Connection cables		
KA BG08-L 4P-0500	0307767	●
KA BG08-L 4P-1000	0307768	
KA BW08-L 4P-0500	0307765	
KA BW08-L 4P-1000	0307766	
Sensor distributor		
V2-M8-4P-2XM8-3P	0301380	

ⓘ Per unit one sensor (closer/S) is required, optionally a cable extension. Please note the minimum permitted bending radii for the sensor cables, which are generally 35 mm.

PZH-plus 50

SCHUNK Grippers pneumatic | 3-Finger Centric Grippers | Long-stroke Gripper

Gripping force, O.D. gripping

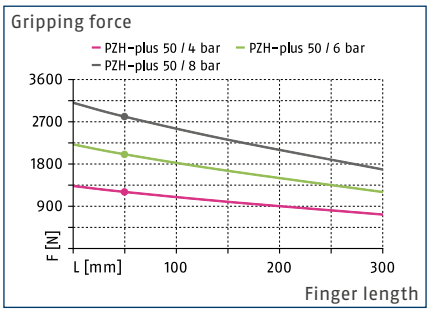

Gripping force, I.D. gripping

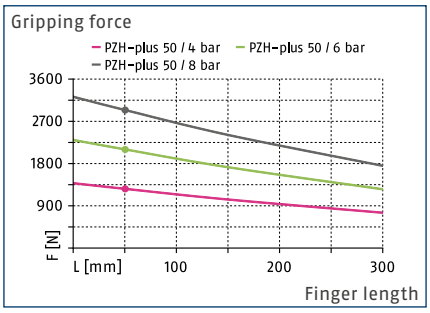

Finger load

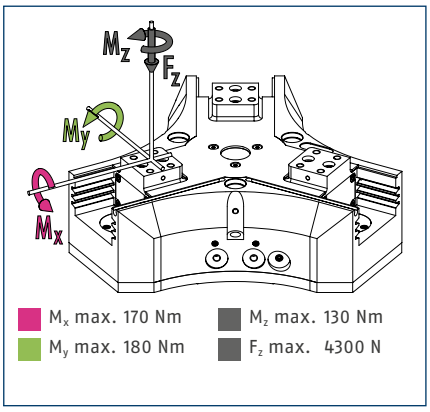

ⓘ The indicated moments and forces are static values, apply per base jaw and may occur simultaneously. M_y may arise in addition to the moment generated by the gripping force itself. If the max. permitted finger weight is exceeded, it is impreative to throttle the air supply so that the jaw movement occurs without any hitting or bouncing. Service life may be reduced.

Technical data

Description		PZH-plus 50
ID		0305380
Stroke per jaw	[mm]	50
Closing- / opening force	[N]	2000/2100
Weight	[kg]	12.5
Recommended workpiece weight	[kg]	10
Fluid consumption per double stroke	[cm³]	580
min. / max. operating pressure	[bar]	2/8
Nominal operating pressure	[bar]	6
Closing- / opening time	[s]	0.55/0.45
max. permitted finger length	[mm]	300
max. permitted weight per finger	[kg]	5
IP class		40
min. / max. ambient temperature	[°C]	5/90
Repeat accuracy	[mm]	0.05
Cleanroom class ISO 14644-1		5

Main view

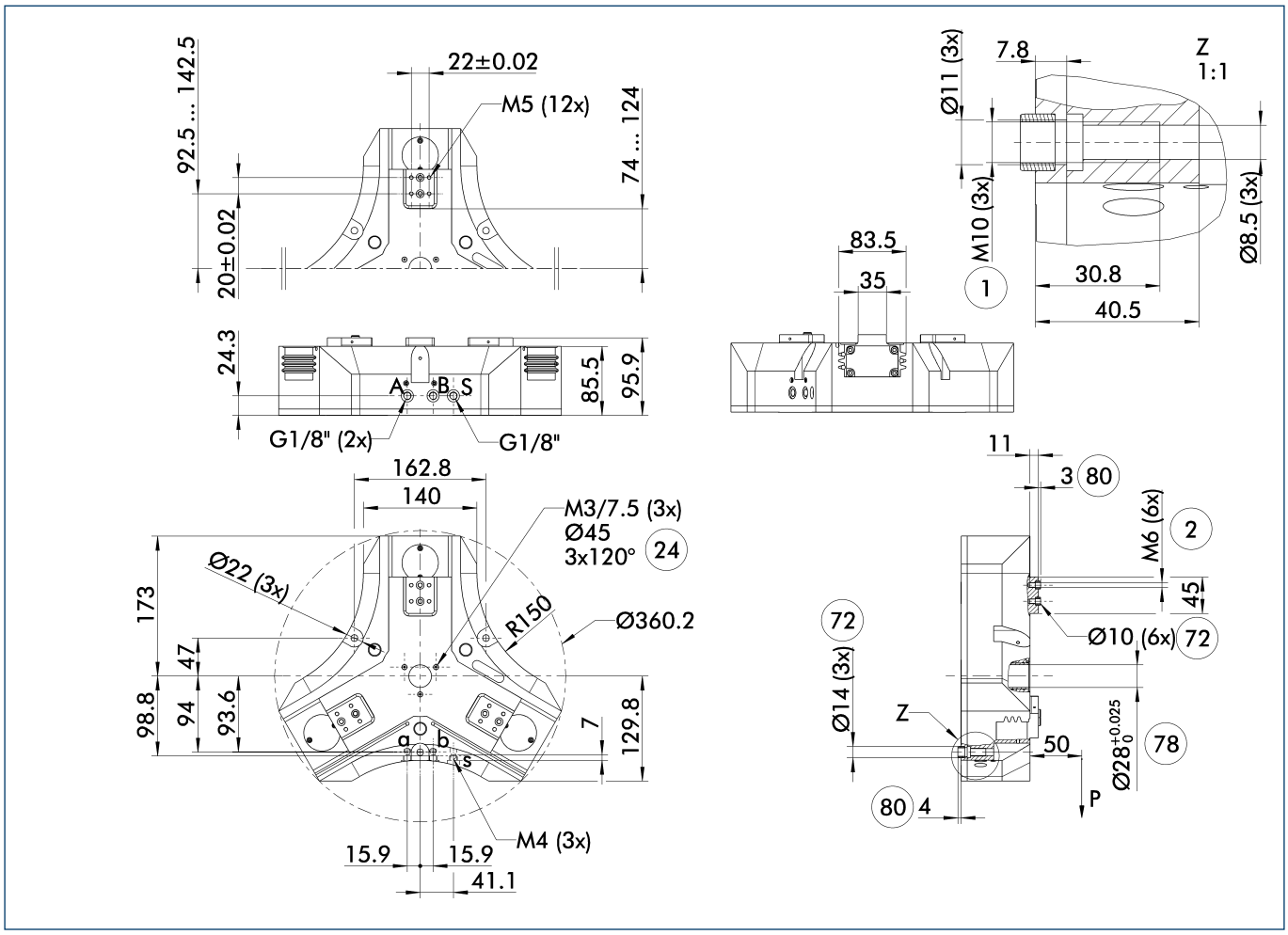

The drawing shows the gripper in the basic version with closed jaws, without dimensional consideration of the options described below.

ⓘ The SDV-P pressure maintenance valve can be used to maintain the position in the case of a loss of pressure (see "Accessories" catalog section).

A, a Main / direct connection, gripper opening

B, b Main / direct connection, gripper closing

S Air purge connection (0.5 ... 1 bar)

(1) Gripper connection

(2) Finger connection

(24) Bolt circle

(72) Fit for centering sleeves

(78) Fitting for centering

(80) Depth of the centering sleeve hole in the mating part

Hose-free direct connection M4

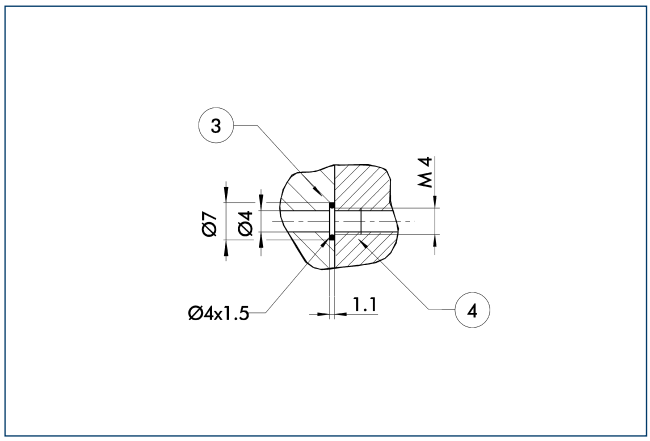

3 Adapter

4 Gripper

The direct connection is used for supplying compressed air without hoses. Instead, the pressure medium is fed through bore-holes in the mounting plate.

Spring-loaded pressure piece

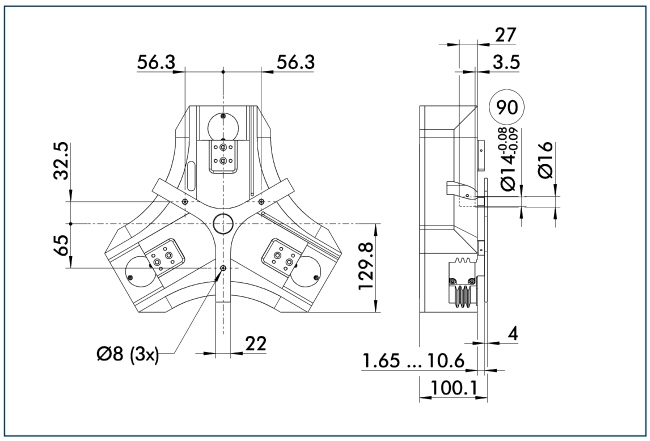

90 Guide pin

For spring-supported positioning of the workpiece against a stop after the gripper has opened. Especially developed for loading machines.

Description	ID	Stroke [mm]	Min. force [N]
Spring-loaded pressure piece			
A-PZH-plus 50	0305383	8.5	69

SDV-P pressure maintenance valve

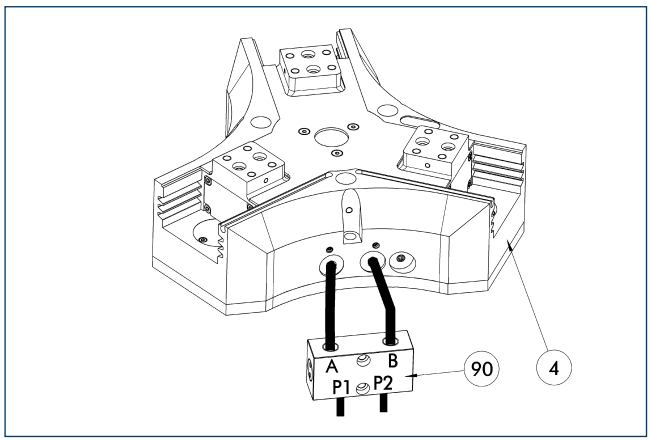

4 Gripper

90 SDV-P pressure maintenance valve

The SDV-P pressure maintenance valves ensure that the pressure in the piston chamber of pneumatic gripping, rotary, linear, and quick-change modules is maintained temporarily during an emergency stop.

Description	ID	
Pressure maintenance valve		
SDV-P 04	0403130	

Mounting kit for IN 80 proximity switches

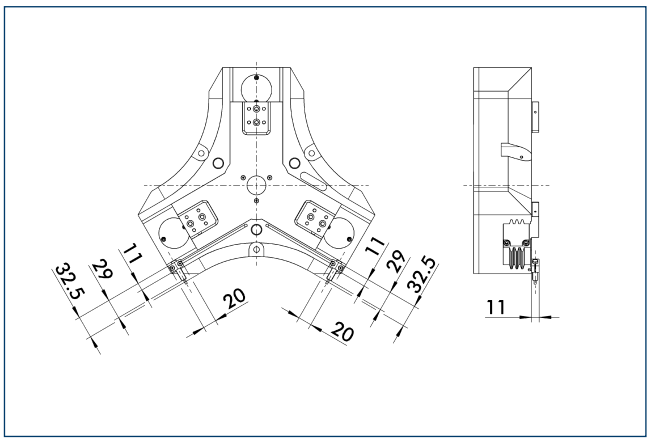

The mounting kit comprises mount, switching lug / cam and mounting screws. Proximity switches must be ordered separately.

Description	ID	
Mounting kit for proximity switch		
AS-IN80-PZH-plus 20-50	0305364	

ⓘ This mounting kit needs to be ordered optionally as an accessory.

Inductive proximity switches

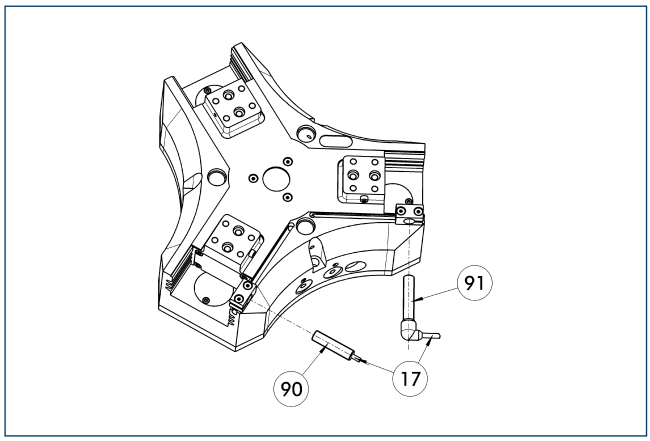

(17) Cable outlet
(91) IN ...-SA sensor
(90) IN ... sensor

Limit position monitor can be mounted with mounting kit.

Description	ID	Often combined
Mounting kit for proximity switch		
AS-IN80-PZH-plus 20-50	0305364	
Inductive proximity switches		
IN 80-S-M12	0301578	
IN 80-S-M8	0301478	●
IN-C 80-S-M8	0301475	
INK 80-S	0301550	
INK 80-SL	0301579	
Inductive proximity switches with lateral outlet		
IN 80-S-M12-SA	0301587	
IN 80-S-M8-SA	0301483	●
INK 80-S-SA	0301566	
Cable extensions		
KV BG12-SG12 3P-0030-PNP	0301999	
KV BG12-SG12 3P-0060-PNP	0301998	
KV BW08-SG08 3P-0030-PNP	0301495	
KV BW08-SG08 3P-0100-PNP	0301496	
KV BW08-SG08 3P-0200-PNP	0301497	●
KV BW12-SG12 3P-0030-PNP	0301595	
KV BW12-SG12 3P-0100-PNP	0301596	
KV BW12-SG12 3P-0200-PNP	0301597	
Clip for plug / socket		
CLI-M12	0301464	
CLI-M8	0301463	
Connection cables		
KA BG08-L 3P-0300-PNP	0301622	●
KA BG08-L 3P-0500-PNP	0301623	
KA BG12-L 3P-0500-PNP	30016369	
KA BW08-L 3P-0300-PNP	0301594	
KA BW08-L 3P-0500-PNP	0301502	
KA BW12-L 3P-0300-PNP	0301503	
KA BW12-L 3P-0500-PNP	0301507	
Sensor distributor		
V2-M12	0301776	●
V2-M8	0301775	●

ⓘ Two sensors (closer/S) are required for each unit, plus extension cables as an option. This mounting kit needs to be ordered optionally as an accessory. Please note the minimum permitted bending radii for the sensor cables, which are generally 35 mm.

MMS electronic magnetic switches

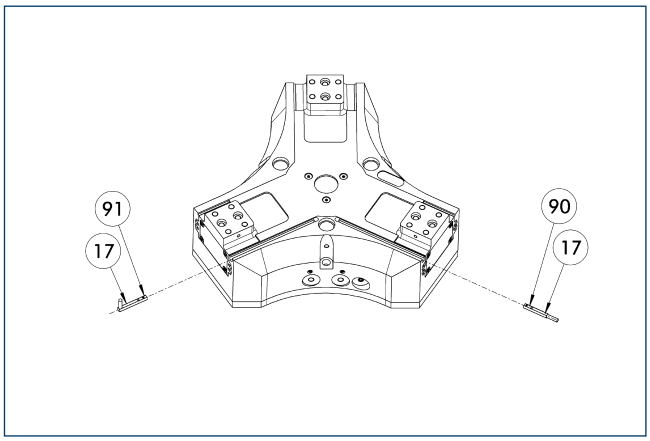

(17) Cable outlet
(91) MMS 22...-SA sensor
(90) MMS 22... sensor

End position monitoring for mounting in the C-slot.

Description	ID	Often combined
MMS electronic magnetic switches		
MMS 22-S-M8-PNP	0301032	●
MMSK 22-S-PNP	0301034	
MMS electronic magnetic switches with lateral cable outlet		
MMS 22-S-M8-PNP-SA	0301042	●
MMSK 22-S-PNP-SA	0301044	
Cable extensions		
KV BW08-SG08 3P-0030-PNP	0301495	
KV BW08-SG08 3P-0100-PNP	0301496	
KV BW08-SG08 3P-0200-PNP	0301497	●
Clip for plug / socket		
CLI-M8	0301463	
Connection cables		
KA BG08-L 3P-0300-PNP	0301622	●
KA BG08-L 3P-0500-PNP	0301623	
KA BW08-L 3P-0300-PNP	0301594	
KA BW08-L 3P-0500-PNP	0301502	
Sensor distributor		
V2-M8	0301775	●
V4-M8	0301746	
V8-M8	0301751	

ⓘ Two sensors (closer/S) are required for each unit, plus extension cables as an option. Please note the minimum permitted bending radii for the sensor cables, which are generally 35 mm.

MMS PI1 programmable magnetic switches

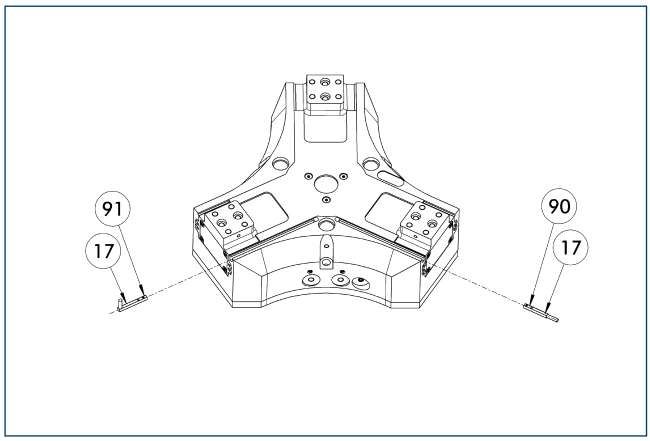

17 Cable outlet
91 MMS 22...-PI1-...-SA sensor
90 MMS 22...-PI1-... sensor

Position query with one programmable position per sensor and electronics integrated in sensor. Programmable via MT magnet teaching tool (included in the scope of delivery) or ST plug teaching tool (optional). Limit position query mounted in C-groove. If the ST plug teaching tools are listed in the table, teaching can only take place with the ST plug teaching tools.

Description	ID	Often combined
MMS PI1 programmable magnetic switches		
MMS 22-PI1-S-M8-PNP	0301160	●
MMSK 22-PI1-S-PNP	0301162	
MMS PI1-HD programmable magnetic switches with stainless steel housing		
MMS 22-PI1-S-M8-PNP-HD	0301110	●
MMSK 22-PI1-S-PNP-HD	0301112	
MMS PI1 programmable magnetic switches with lateral cable outlet		
MMS 22-PI1-S-M8-PNP-SA	0301166	●
MMSK 22-PI1-S-PNP-SA	0301168	

ⓘ Two sensors (closer/S) are required for each unit, plus extension cables as an option. Please note the minimum permitted bending radii for the sensor cables, which are generally 35 mm. Connection cable, cable extensions, and sensor distributors can be found in the table for the MMS 22.

PZH-plus 75

SCHUNK Grippers pneumatic | 3-Finger Centric Grippers | Long-stroke Gripper

Gripping force, O.D. gripping

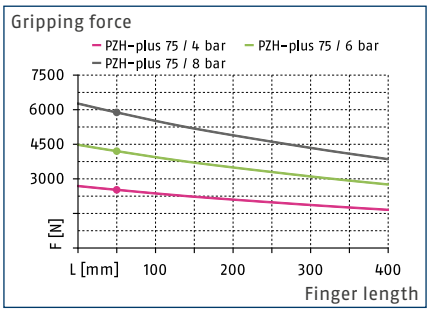

Gripping force, I.D. gripping

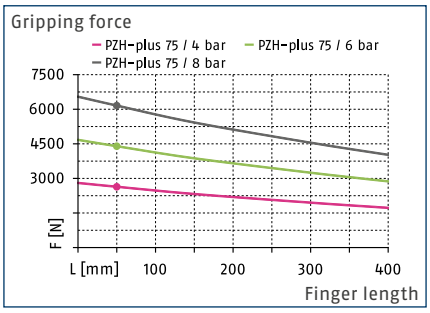

Finger load

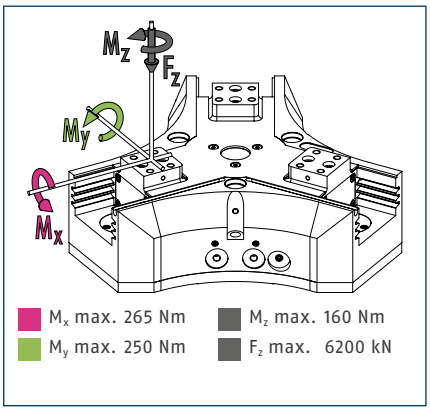

ⓘ The indicated moments and forces are static values, apply per base jaw and may occur simultaneously. M_y may arise in addition to the moment generated by the gripping force itself. If the max. permitted finger weight is exceeded, it is impreative to throttle the air supply so that the jaw movement occurs without any hitting or bouncing. Service life may be reduced.

Technical data

Description		PZH-plus 75
ID		0305390
Stroke per jaw	[mm]	75
Closing- / opening force	[N]	4200/4400
Weight	[kg]	33
Recommended workpiece weight	[kg]	22
Fluid consumption per double stroke	[cm³]	1860
min. / max. operating pressure	[bar]	2/8
Nominal operating pressure	[bar]	6
Closing- / opening time	[s]	1.05/0.85
max. permitted finger length	[mm]	400
max. permitted weight per finger	[kg]	8.5
IP class		40
min. / max. ambient temperature	[°C]	5/90
Repeat accuracy	[mm]	0.05
Cleanroom class ISO 14644-1		5

Main view

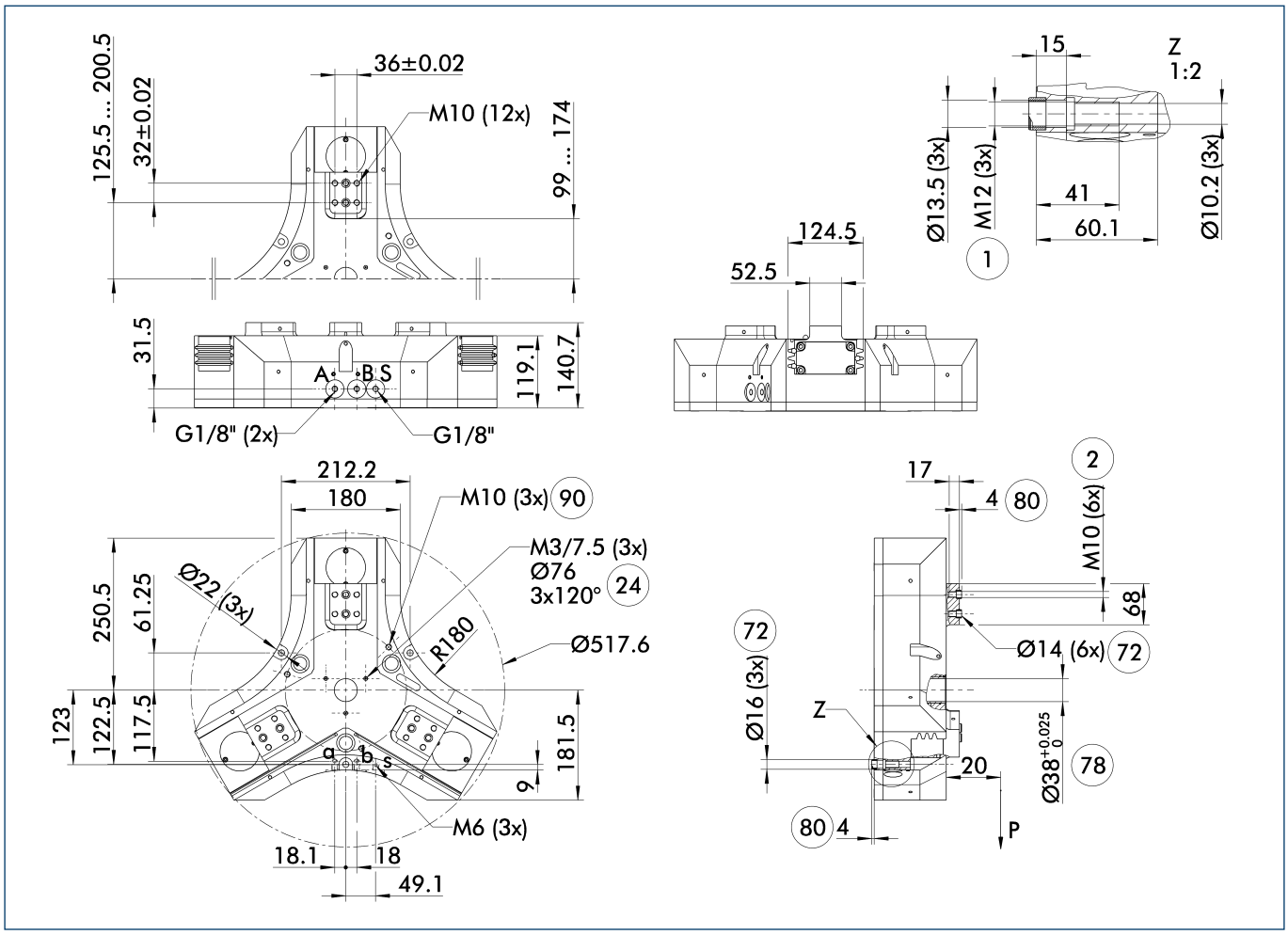

The drawing shows the gripper in the basic version with closed jaws, without dimensional consideration of the options described below.

ⓘ The SDV-P pressure maintenance valve can be used to maintain the position in the case of a loss of pressure (see "Accessories" catalog section).

A, a Main / direct connection, gripper opening

B, b Main / direct connection, gripper closing

S Air purge connection (0.5 ... 1 bar)

(1) Gripper connection

(2) Finger connection

(24) Bolt circle

(72) Fit for centering sleeves

(78) Fitting for centering

(80) Depth of the centering sleeve hole in the mating part

(90) Transport thread

Hose-free direct connection M6

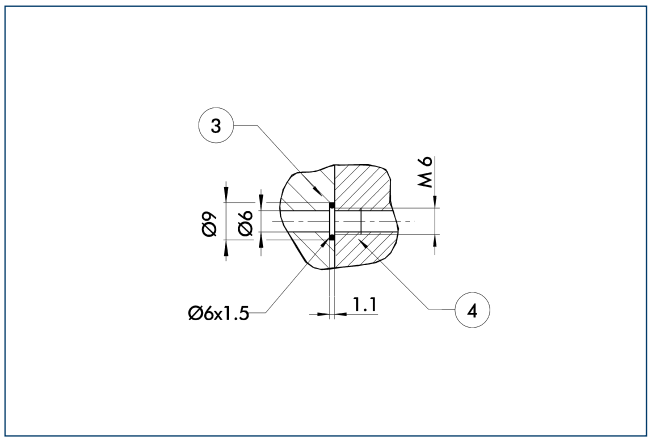

3 Adapter

4 Gripper

The direct connection is used for supplying compressed air without hoses. Instead, the pressure medium is fed through bore-holes in the mounting plate.

Spring-loaded pressure piece

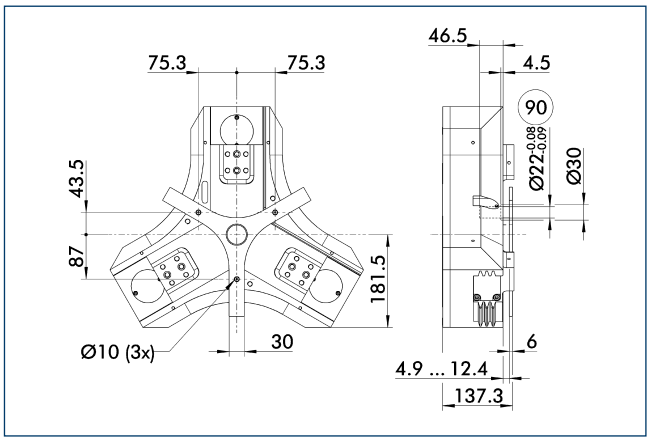

90 Guide pin

For spring-supported positioning of the workpiece against a stop after the gripper has opened. Especially developed for loading machines.

Description	ID	Stroke [mm]	Min. force [N]
Spring-loaded pressure piece			
A-PZH-plus 75	0305393	10.5	108

SDV-P pressure maintenance valve

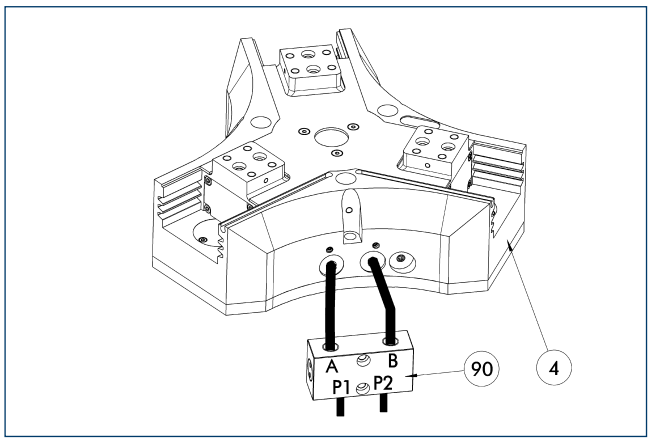

4 Gripper

90 SDV-P pressure maintenance valve

The SDV-P pressure maintenance valves ensure that the pressure in the piston chamber of pneumatic gripping, rotary, linear, and quick-change modules is maintained temporarily during an emergency stop.

Description	ID	
Pressure maintenance valve		
SDV-P 07	0403131	

Mounting kit for IN 80 proximity switches

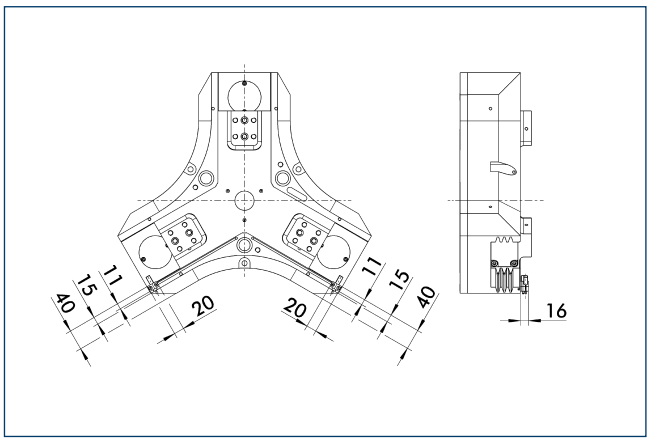

The mounting kit comprises mount, switching lug / cam and mounting screws. Proximity switches must be ordered separately.

Description	ID	
Mounting kit for proximity switch		
AS-IN80-PZH-plus 75	0305394	

ⓘ This mounting kit needs to be ordered optionally as an accessory.

Inductive proximity switches

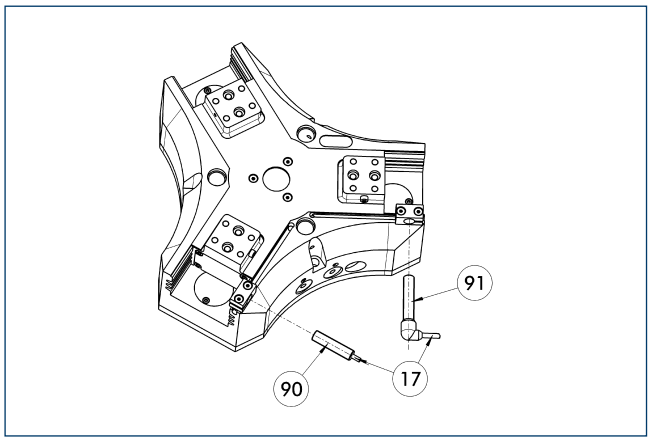

(17) Cable outlet
(91) IN ...-SA sensor
(90) IN ... sensor

Limit position monitor can be mounted with mounting kit.

Description	ID	Often combined
Mounting kit for proximity switch		
AS-IN80-PZH-plus 75	0305394	
Inductive proximity switches		
IN 80-S-M12	0301578	
IN 80-S-M8	0301478	●
IN-C 80-S-M8	0301475	
INK 80-S	0301550	
INK 80-SL	0301579	
Inductive proximity switches with lateral outlet		
IN 80-S-M12-SA	0301587	
IN 80-S-M8-SA	0301483	●
INK 80-S-SA	0301566	
Cable extensions		
KV BG12-SG12 3P-0030-PNP	0301999	
KV BG12-SG12 3P-0060-PNP	0301998	
KV BW08-SG08 3P-0030-PNP	0301495	
KV BW08-SG08 3P-0100-PNP	0301496	
KV BW08-SG08 3P-0200-PNP	0301497	●
KV BW12-SG12 3P-0030-PNP	0301595	
KV BW12-SG12 3P-0100-PNP	0301596	
KV BW12-SG12 3P-0200-PNP	0301597	
Clip for plug / socket		
CLI-M12	0301464	
CLI-M8	0301463	
Connection cables		
KA BG08-L 3P-0300-PNP	0301622	●
KA BG08-L 3P-0500-PNP	0301623	
KA BG12-L 3P-0500-PNP	30016369	
KA BW08-L 3P-0300-PNP	0301594	
KA BW08-L 3P-0500-PNP	0301502	
KA BW12-L 3P-0300-PNP	0301503	
KA BW12-L 3P-0500-PNP	0301507	
Sensor distributor		
V2-M12	0301776	●
V2-M8	0301775	●

ⓘ Two sensors (closer/S) are required for each unit, plus extension cables as an option. This mounting kit needs to be ordered optionally as an accessory. Please note the minimum permitted bending radii for the sensor cables, which are generally 35 mm.

MMS electronic magnetic switches

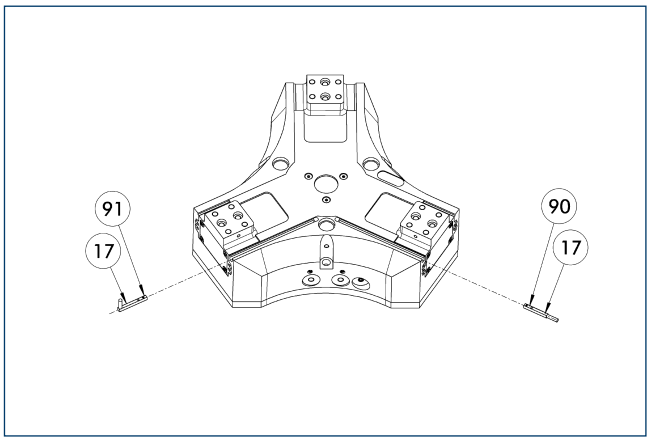

(17) Cable outlet
(91) MMS 22...-SA sensor
(90) MMS 22... sensor

End position monitoring for mounting in the C-slot.

Description	ID	Often combined
MMS electronic magnetic switches		
MMS 22-S-M8-PNP	0301032	●
MMSK 22-S-PNP	0301034	
MMS electronic magnetic switches with lateral cable outlet		
MMS 22-S-M8-PNP-SA	0301042	●
MMSK 22-S-PNP-SA	0301044	
Cable extensions		
KV BW08-SG08 3P-0030-PNP	0301495	
KV BW08-SG08 3P-0100-PNP	0301496	
KV BW08-SG08 3P-0200-PNP	0301497	●
Clip for plug / socket		
CLI-M8	0301463	
Connection cables		
KA BG08-L 3P-0300-PNP	0301622	●
KA BG08-L 3P-0500-PNP	0301623	
KA BW08-L 3P-0300-PNP	0301594	
KA BW08-L 3P-0500-PNP	0301502	
Sensor distributor		
V2-M8	0301775	●
V4-M8	0301746	
V8-M8	0301751	

ⓘ Two sensors (closer/S) are required for each unit, plus extension cables as an option. Please note the minimum permitted bending radii for the sensor cables, which are generally 35 mm.

MMS PI1 programmable magnetic switches

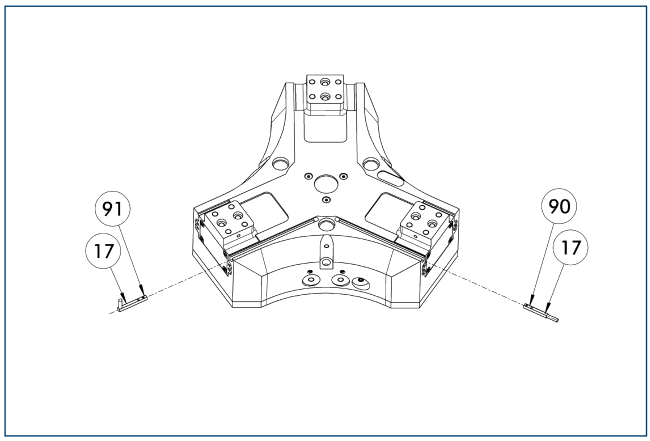

17 Cable outlet

91 MMS 22...-PI1-...-SA sensor

90 MMS 22...-PI1-... sensor

Position query with one programmable position per sensor and electronics integrated in sensor. Programmable via MT magnet teaching tool (included in the scope of delivery) or ST plug teaching tool (optional). Limit position query mounted in C-groove. If the ST plug teaching tools are listed in the table, teaching can only take place with the ST plug teaching tools.

Description	ID	Often combined
MMS PI1 programmable magnetic switches		
MMS 22-PI1-S-M8-PNP	0301160	●
MMSK 22-PI1-S-PNP	0301162	
MMS PI1-HD programmable magnetic switches with stainless steel housing		
MMS 22-PI1-S-M8-PNP-HD	0301110	●
MMSK 22-PI1-S-PNP-HD	0301112	
MMS PI1 programmable magnetic switches with lateral cable outlet		
MMS 22-PI1-S-M8-PNP-SA	0301166	●
MMSK 22-PI1-S-PNP-SA	0301168	

ⓘ Two sensors (closer/S) are required for each unit, plus extension cables as an option. Please note the minimum permitted bending radii for the sensor cables, which are generally 35 mm. Connection cable, cable extensions, and sensor distributors can be found in the table for the MMS 22.

Robust. Flexible. Precise.
PZB-plus Universal Gripper

Universal 3-finger centric gripper with large gripping force and high maximum moments per finger, plus center bore

Field of Application

For universal use in clean and slightly dirty environments. Suitable for applications that require a center bore, e.g. for workpiece feed, special sensor systems or optical recognition systems

Advantages – Your benefit

Robust multi-tooth guidance for precise handling

High maximum moments possible suitable for using long gripper fingers

High gripping forces achievable for a wide range of applications

Center through-hole available with fitting and internal thread, which facilitates assembly of customer attachments. Moreover, the center bore is used for feed through of supply hoses and others.

Air supply via hose-free direct connection or screw connections for flexible pressure supply in all automated systems

Manifold options optional with mechanic gripping force maintenance

Sizes	Weight	Gripping force	Stroke per jaw	Workpiece weight
Quantity: 9	0.26 .. 53 kg	340 .. 27400 N	2 .. 35 mm	1.7 .. 100 kg

Functional Description

The piston is moved up and down by compressed air.
The angled active surfaces of the wedge-hook produce a synchronized, centric jaw movement.

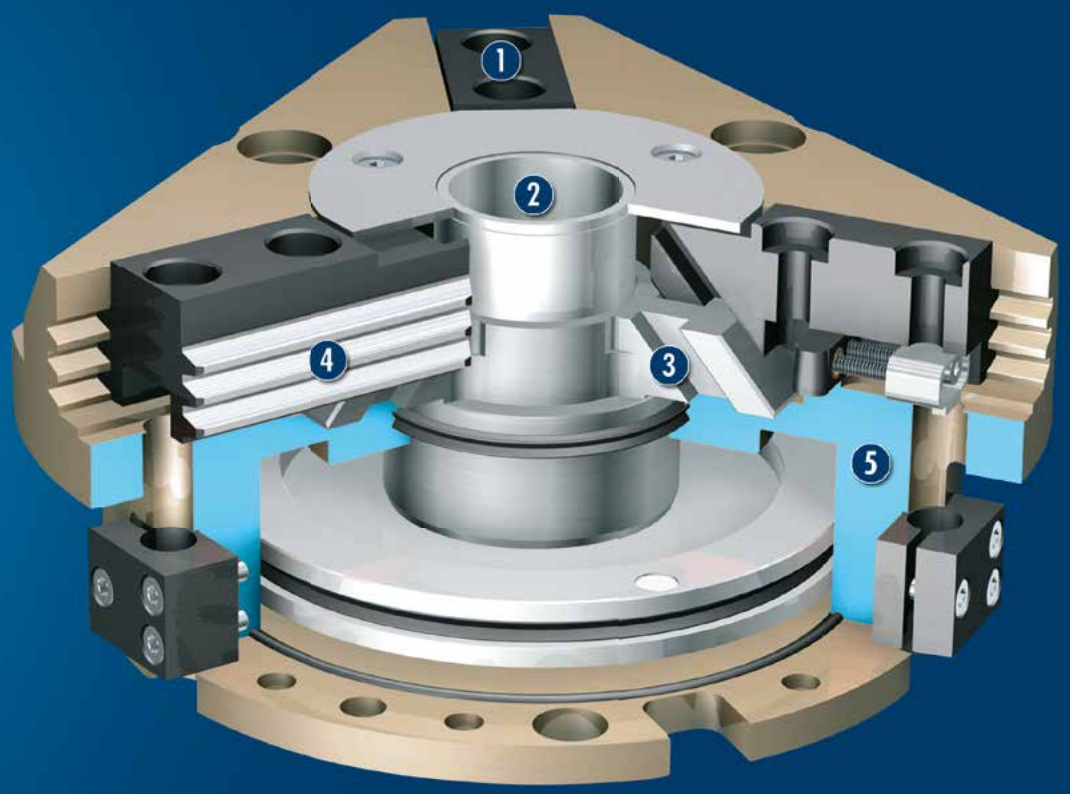

① **Base jaw**
for the connection of workpiece-specific gripper fingers

② **Center bore**
for workpiece feeding, for sensor systems, actuators (ejectors) or optical workpiece recognition

③ **Wedge-hook design**
for high power transmission and centric gripping

④ **Multiple-tooth guidance**
Precise gripping through base jaw guidance with a high load capacity and a minimum play

⑤ **Housing**
Weight-optimized through application of high-strength aluminum alloy

CAD data, operating manuals and other current product documents are available at **www.schunk.com**

General Notes about the Series

Operating principle: Wedge-hook kinematics

Housing material: Aluminum alloy, anodized

Base jaw material: Steel

Actuation: pneumatic, with filtered compressed air as per DIN ISO 8573-1: 7 4 4

Warranty: 36 months (for details, GTCs, and operating manuals, visit www.schunk.com)

Scope of delivery: Mount for proximity switch, centering sleeves, O-rings for direct connection, assembly and operating manual with declaration of incorporation.

Gripping force maintenance device: possible with SDV-P pressure maintenance valve

Gripping force: is the arithmetic total of the gripping force applied to each gripper jaw at distance P (see illustration).

Finger length: is measured from the upper edge of the gripper housing in the direction of the main axis. The breach of the max. permitted finger length can bring higher abrasion. The maximum permissible finger length applies up to the nominal operating pressure. With higher pressures, the finger length must be reduced proportionally to the nominal operating pressure.

Repeat accuracy: is defined as the spread of the limit position after 100 consecutive strokes.

Workpiece weight: is calculated for a force-fit connection with a coefficient of friction of 0.1 and a safety factor of 2 against slippage of the workpiece on acceleration due to gravity g. Considerably heavier workpiece weights are permitted with form-fit gripping.

Closing and opening times: are purely the times that the base jaws or fingers are in motion. Valve switching times, hose filling times or PLC reaction times are not included in the above times and must be taken into consideration when determining cycle times.

Application example

Assembly aid for long shafts. Feeding is done space-saving via the center bores of gripper and rotary feed-through.

1. PZB-plus 3-Finger Centric Gripper
2. Modified DDF Rotary Feed-through with center bore

SCHUNK offers more ...

The following components make the product PZB-plus even more productive – the suitable addition for the highest functionality, flexibility, reliability, and controlled production.

Sensor System

Fittings

Universal Intermediate Jaw

Compensation Unit

Sensor Distributor

Jaw Quick-change System

Sensor Cables

Gripper Pads

SDV-P Pressure Maintenance Valve

Finger Blanks with Jaw Quick-change System

Force Measuring Jaws

Analog Position Sensor

ⓘ Further information regarding the products can be found on the following product pages or at www.schunk.com. Please contact us for further information: SCHUNK technical hotline +49-7133-103-2696

Options and special Information

Gripping force maintenance version AS / IS: The mechanical gripping force maintenance version ensures a minimum gripping force also in the case of a drop in pressure. In the AS / S version this has the effect of a closing force, in the IS version of an opening force.
Due to the center bore, the PZB-plus series is the optimal standard solution for many fields of application.

PZB-plus 50

SCHUNK Grippers pneumatic | 3-Finger Centric Grippers | Universal Gripper

Gripping force, O.D. gripping

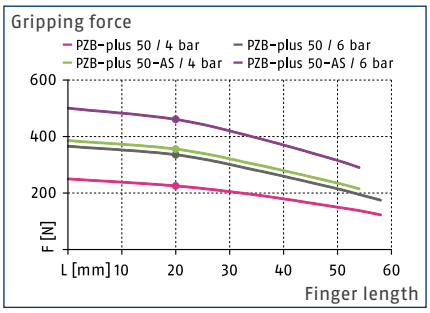

Gripping force, I.D. gripping

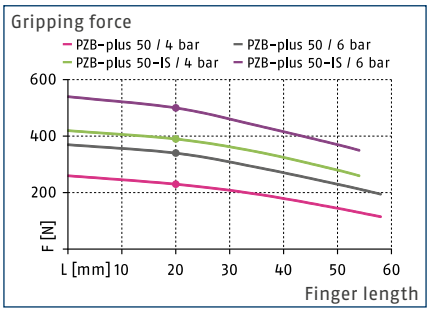

Finger load

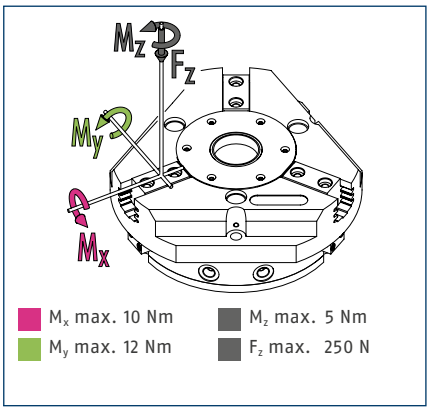

ⓘ The indicated moments and forces are static values, apply per base jaw and may occur simultaneously. M_y may arise in addition to the moment generated by the gripping force itself. If the max. permitted finger weight is exceeded, it is impreative to throttle the air supply so that the jaw movement occurs without any hitting or bouncing. Service life may be reduced.

Technical data

Description		PZB-plus 50-1	PZB-plus 50-1-AS	PZB-plus 50-1-IS
ID		0305140	0305142	0305144
Stroke per jaw	[mm]	2.5	2.5	2.5
Closing- / opening force	[N]	340/360	460/-	-/500
min. spring force	[N]		120	140
Weight	[kg]	0.26	0.36	0.36
Recommended workpiece weight	[kg]	1.7	1.7	1.7
Fluid consumption per double stroke	[cm³]	10.5	15	15
min. / max. operating pressure	[bar]	2/8	4/6.5	4/6.5
Nominal operating pressure	[bar]	6	6	6
Closing- / opening time	[s]	0.03/0.03	0.02/0.04	0.04/0.02
Closing- / opening time only with spring	[s]		0.08	0.08
max. permitted finger length	[mm]	58	54	54
max. permitted weight per finger	[kg]	0.1	0.1	0.1
IP class		40	40	40
min. / max. ambient temperature	[°C]	5/90	5/90	5/90
Repeat accuracy	[mm]	0.01	0.01	0.01
Diameter of center bore	[mm]	6	6	6

Main view

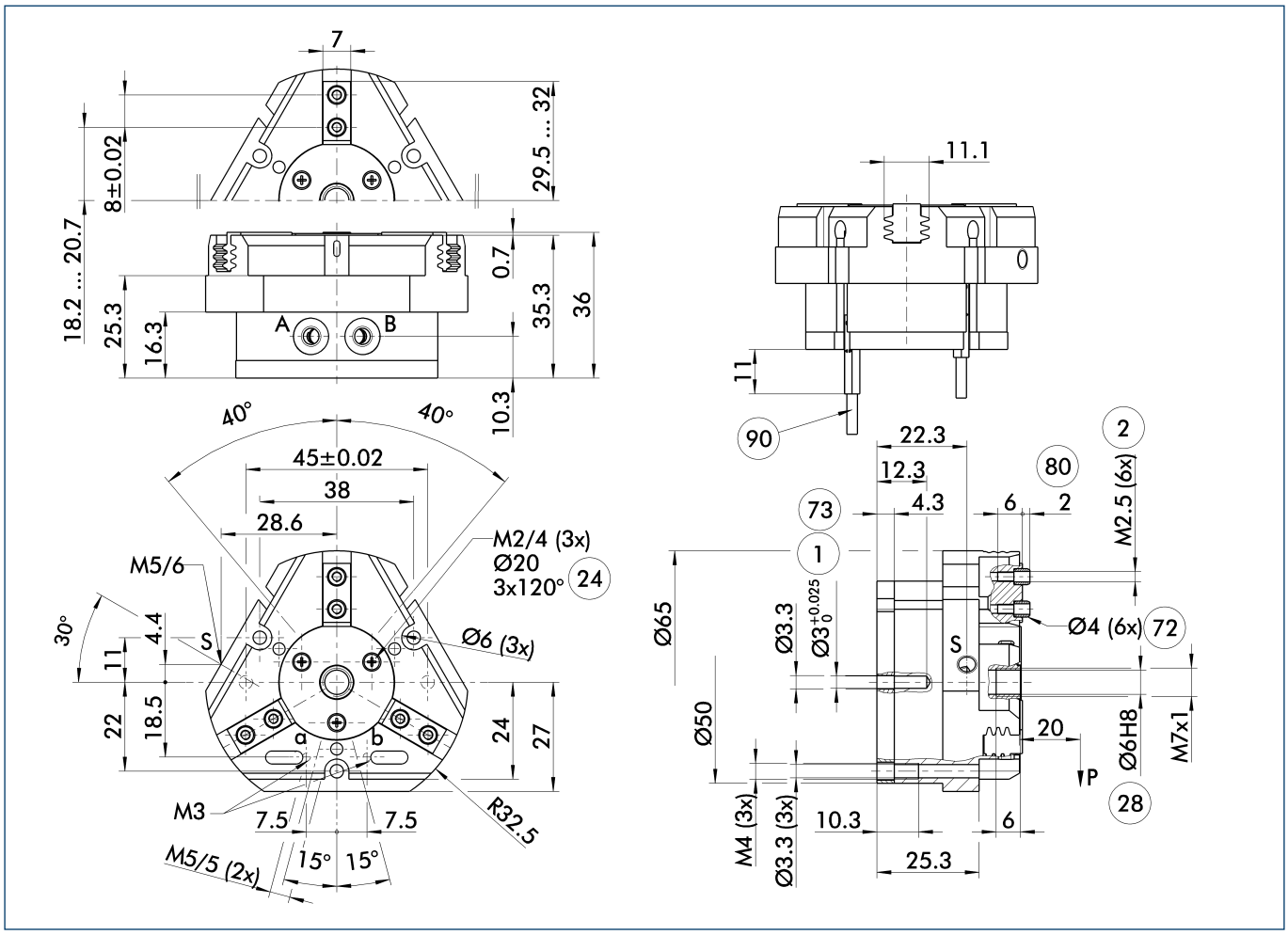

The drawing shows the gripper in the basic version with closed jaws, without dimensional consideration of the options described below.

ⓘ The SDV-P pressure maintenance valve can also be used for I.D. or O.D. gripping alternatively or in addition to the spring-loaded, mechanical gripping force maintenance device (see catalog section on "Accessories").

A, a Main / direct connection, gripper opening

B, b Main / direct connection, gripper closing

S Air purge connection (0.5 ... 1 bar)

(1) Gripper connection

(2) Finger connection

(24) Bolt circle

(28) Through-bore

(72) Fit for centering sleeves

(73) Fit for centering pins

(80) Depth of the centering sleeve hole in the mating part

(90) MMS 22... sensor

Hose-free direct connection M3

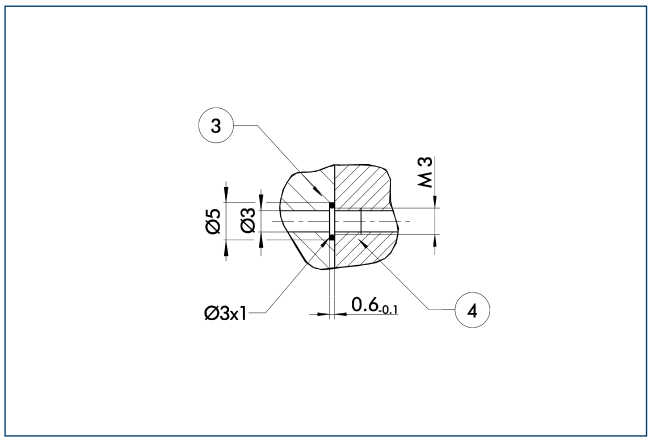

(3) Adapter (4) Gripper

The direct connection is used for supplying compressed air without hoses. Instead, the pressure medium is fed through bore-holes in the mounting plate.

Gripping force maintenance device AS / IS

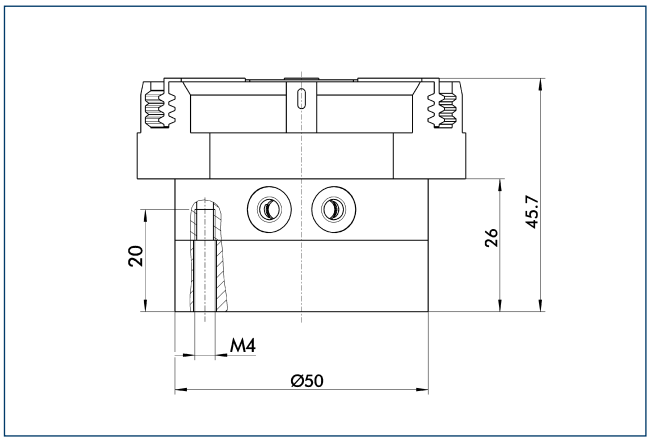

The mechanical maintenance of gripping force also assures a minimum gripping force in the case of a loss of pressure. With the AS / S variant, this acts as a closing force, and as an opening force for the IS variant. The maintenance of gripping force element can also be used as a means for increasing gripping force or for single actuated gripping.

Spring-loaded pressure piece

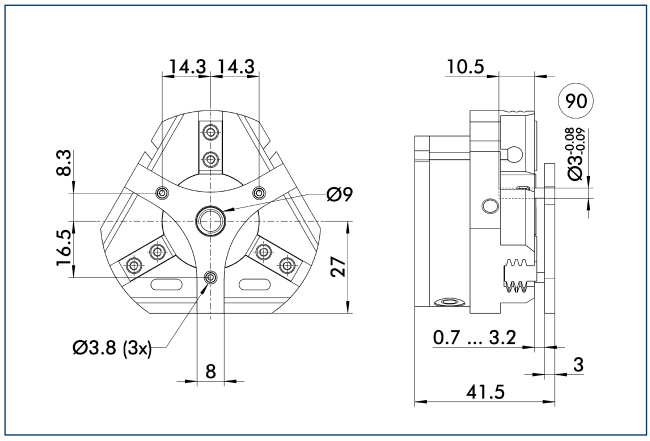

(90) Guide pin

For spring-supported positioning of the workpiece against a stop after the gripper has opened. Especially developed for loading machines.

Description	ID	Stroke [mm]	Min. force [N]
Spring-loaded pressure piece			
A-PZB-plus 50	0305146	2.5	5

SDV-P pressure maintenance valve

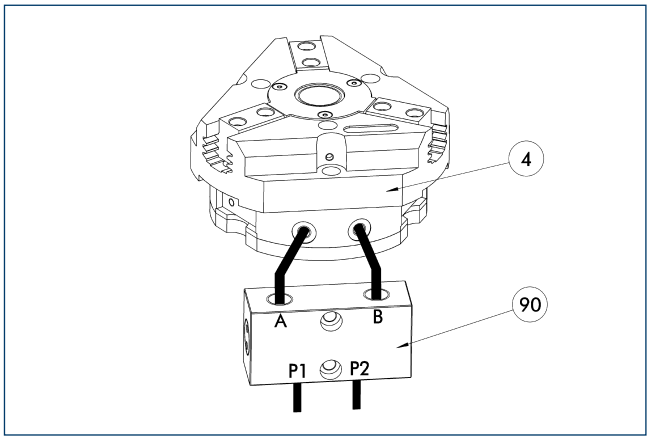

(4) Gripper (90) SDV-P pressure maintenance valve

The SDV-P pressure maintenance valves ensure that the pressure in the piston chamber of pneumatic gripping, rotary, linear, and quick-change modules is maintained temporarily during an emergency stop.

Description	ID	
Pressure maintenance valve		
SDV-P 04	0403130	

UZB 40 universal intermediate jaw

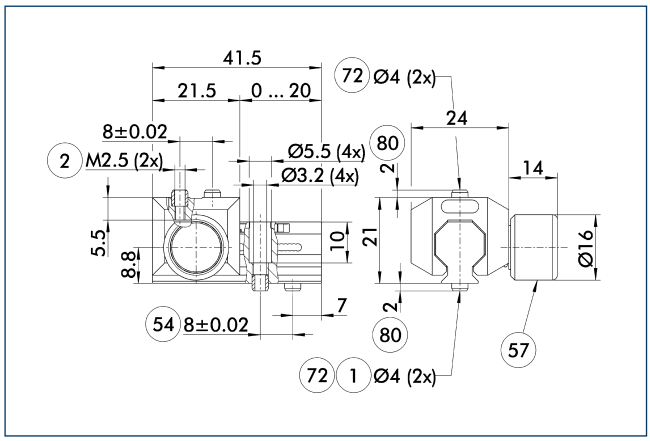

1 Gripper connection
2 Finger connection
54 Optional right or left connection
57 Locking
72 Fit for centering sleeves
80 Depth of the centering sleeve hole in the mating part

The universal intermediate jaw allows fast tool-free and reliable plugging and shifting of top jaws at the gripper.

Description	ID	Grid dimension [mm]
Universal intermediate jaw		
UZB 40	0300040	1
Finger blanks		
ABR-PGZN-plus 40	0300008	
SBR-PGZN-plus 40	0300018	

ABR- / SBR-PGZN-plus 40 finger blanks

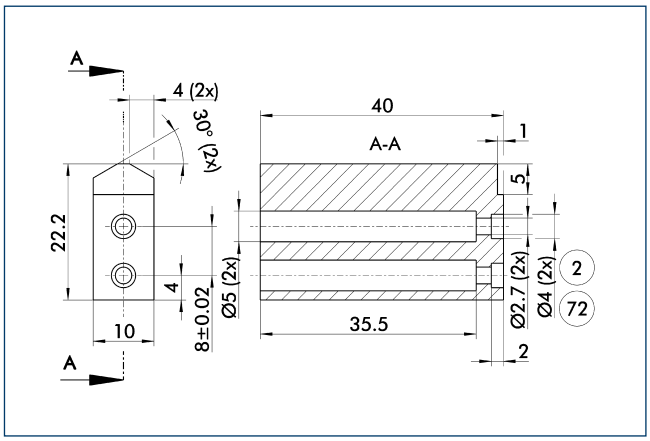

2 Finger connection
72 Fit for centering sleeves

Finger blanks for customized subsequent machining.

Description	ID	Material	Scope of delivery
Finger blanks			
ABR-PGZN-plus 40	0300008	Aluminum	1
SBR-PGZN-plus 40	0300018	16MnCr5	1

MMS electronic magnetic switches

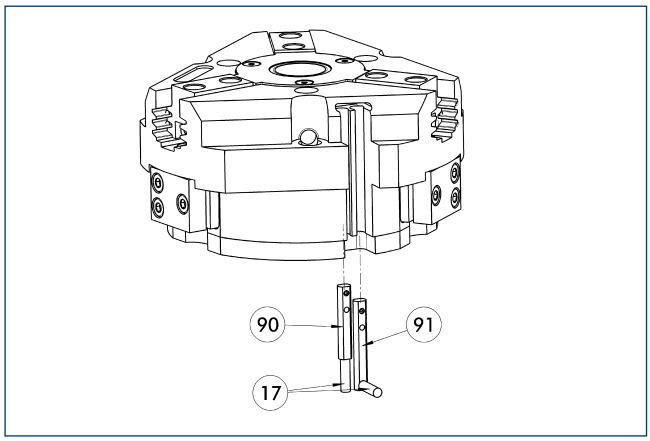

(17) Cable outlet
(91) MMS 22...-SA sensor
(90) MMS 22... sensor

End position monitoring for mounting in the C-slot.

Description	ID	Often combined
MMS electronic magnetic switches		
MMS 22-S-M8-PNP	0301032	●
MMSK 22-S-PNP	0301034	
MMS electronic magnetic switches with lateral cable outlet		
MMS 22-S-M8-PNP-SA	0301042	●
MMSK 22-S-PNP-SA	0301044	
Cable extensions		
KV BW08-SG08 3P-0030-PNP	0301495	
KV BW08-SG08 3P-0100-PNP	0301496	
KV BW08-SG08 3P-0200-PNP	0301497	●
Clip for plug / socket		
CLI-M8	0301463	
Connection cables		
KA BG08-L 3P-0300-PNP	0301622	●
KA BG08-L 3P-0500-PNP	0301623	
KA BW08-L 3P-0300-PNP	0301594	
KA BW08-L 3P-0500-PNP	0301502	
Sensor distributor		
V2-M8	0301775	●
V4-M8	0301746	
V8-M8	0301751	

ⓘ Two sensors (closer/S) are required for each unit, plus extension cables as an option. Please note the minimum permitted bending radii for the sensor cables, which are generally 35 mm.

MMS PI1 programmable magnetic switches

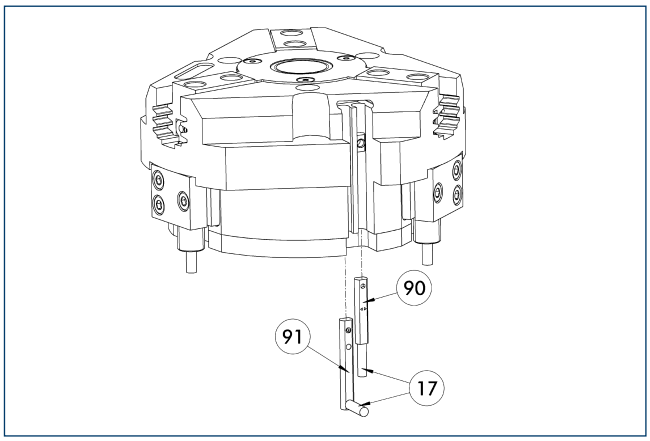

(17) Cable outlet
(91) MMS 22...-PI1-...-SA sensor
(90) MMS 22...-PI1-... sensor

Position query with one programmable position per sensor and electronics integrated in sensor. Programmable via MT magnet teaching tool (included in the scope of delivery) or ST plug teaching tool (optional). Limit position query mounted in C-groove. If the ST plug teaching tools are listed in the table, teaching can only take place with the ST plug teaching tools.

Description	ID	Often combined
Plug teaching tool		
ST-MMS 22-PI1-PNP	0301025	
MMS PI1 programmable magnetic switches		
MMS 22-PI1-S-M8-PNP	0301160	●
MMSK 22-PI1-S-PNP	0301162	
MMS PI1-HD programmable magnetic switches with stainless steel housing		
MMS 22-PI1-S-M8-PNP-HD	0301110	●
MMSK 22-PI1-S-PNP-HD	0301112	
MMS PI1 programmable magnetic switches with lateral cable outlet		
MMS 22-PI1-S-M8-PNP-SA	0301166	●
MMSK 22-PI1-S-PNP-SA	0301168	

ⓘ Two sensors (closer/S) are required for each unit, plus extension cables as an option. Please note the minimum permitted bending radii for the sensor cables, which are generally 35 mm. Connection cable, cable extensions, and sensor distributors can be found in the table for the MMS 22.

MMS PI2 programmable magnetic switches

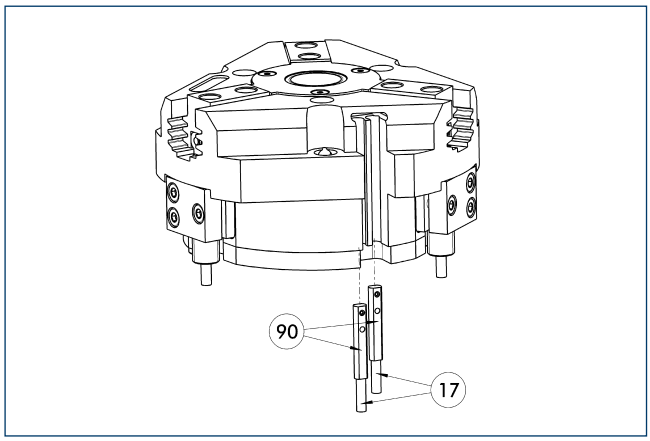

(17) Cable outlet (90) MMS 22...-PI2-... sensor

Position query with two programmable positions per sensor and electronics integrated in sensor. Programmable via MT magnet teaching tool (included in the scope of delivery) or ST plug teaching tool (optional). Limit position query mounted in C-groove. If the ST plug teaching tools are listed in the table, teaching can only take place with the ST plug teaching tools.

Description	ID	Often combined
Plug teaching tool		
ST-MMS 22-PI2-PNP	0301026	
MMS PI2 programmable magnetic switches		
MMS 22-PI2-S-M8-PNP	0301180	●
MMSK 22-PI2-S-PNP	0301182	
MMS PI2-HD programmable magnetic switches with stainless steel housing		
MMS 22-PI2-S-M8-PNP-HD	0301130	●
MMSK 22-PI2-S-PNP-HD	0301132	

ⓘ Per unit one sensor (closer/S) is required, optionally a cable extension. Please note the minimum permitted bending radii for the sensor cables, which are generally 35 mm. Connection cable, cable extensions, and sensor distributors can be found in the table for the MMS-P 22.

MMS-P programmable magnetic switches

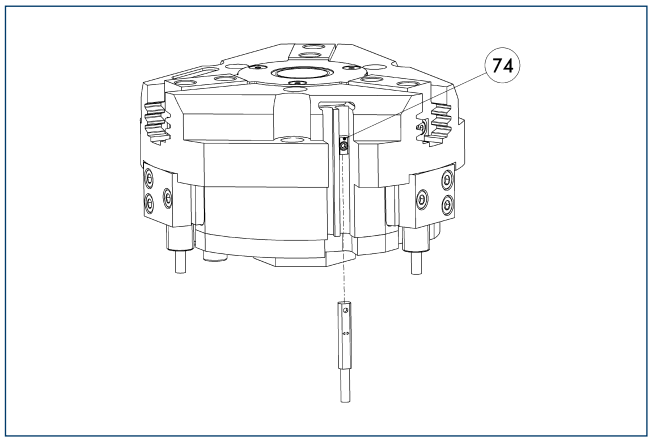

(74) Stop for MMS-P

Position monitoring with two programmable positions per sensor. The end position monitoring is mounted in the C-slot.

Description	ID	Often combined
MMS-P programmable magnetic switches		
MMSK-P 22-S-PNP	0301371	
MMS-P 22-S-M8-PNP	0301370	●
Clip for plug / socket		
CLI-M8	0301463	
Connection cables		
KA BG08-L 4P-0500	0307767	●
KA BG08-L 4P-1000	0307768	
KA BW08-L 4P-0500	0307765	
KA BW08-L 4P-1000	0307766	
Sensor distributor		
V2-M8-4P-2XM8-3P	0301380	

ⓘ Per unit one sensor (closer/S) is required, optionally a cable extension. Please note the minimum permitted bending radii for the sensor cables, which are generally 35 mm.

PZB-plus 64

SCHUNK Grippers pneumatic | 3-Finger Centric Grippers | Universal Gripper

Gripping force, O.D. gripping

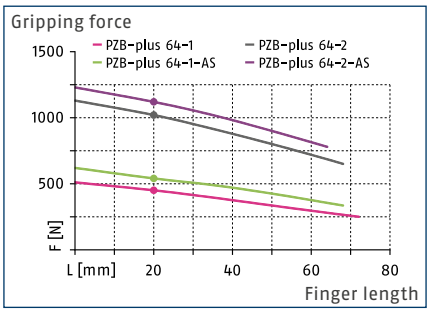

Gripping force, I.D. gripping

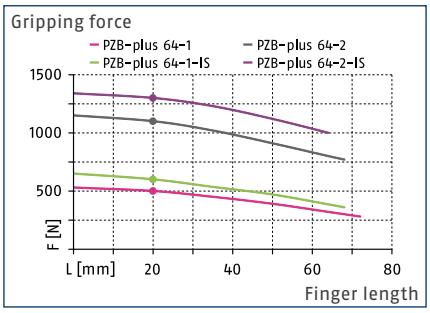

Finger load

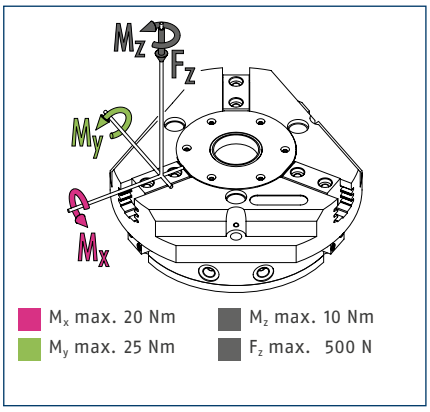

ⓘ The indicated moments and forces are static values, apply per base jaw and may occur simultaneously. M_y may arise in addition to the moment generated by the gripping force itself. If the max. permitted finger weight is exceeded, it is impreative to throttle the air supply so that the jaw movement occurs without any hitting or bouncing. Service life may be reduced.

Technical data

Description		PZB-plus 64-1	PZB-plus 64-2	PZB-plus 64-1-AS	PZB-plus 64-2-AS	PZB-plus 64-1-IS	PZB-plus 64-2-IS
ID		0305150	0305151	0305152	0305153	0305154	0305155
Stroke per jaw	[mm]	4	2	4	2	4	2
Closing- / opening force	[N]	450/500	1000/1100	540/-	1180/-	-/600	-/1300
min. spring force	[N]			90	180	100	200
Weight	[kg]	0.51	0.51	0.63	0.63	0.63	0.63
Recommended workpiece weight	[kg]	2.2	5	2.2	5	2.2	5
Fluid consumption per double stroke	[cm³]	19.5	19.5	35	35	35	35
min. / max. operating pressure	[bar]	2/8	2/8	4/6.5	4/6.5	4/6.5	4/6.5
Nominal operating pressure	[bar]	6	6	6	6	6	6
Closing- / opening time	[s]	0.03/0.03	0.03/0.03	0.02/0.04	0.02/0.04	0.04/0.02	0.04/0.02
Closing- / opening time only with spring	[s]			0.08	0.08	0.08	0.08
max. permitted finger length	[mm]	72	68	68	64	68	64
max. permitted weight per finger	[kg]	0.18	0.18	0.18	0.18	0.18	0.18
IP class		40	40	40	40	40	40
min. / max. ambient temperature	[°C]	5/90	5/90	5/90	5/90	5/90	5/90
Repeat accuracy	[mm]	0.01	0.01	0.01	0.01	0.01	0.01
Diameter of center bore	[mm]	8	8	8	8	8	8

Main view

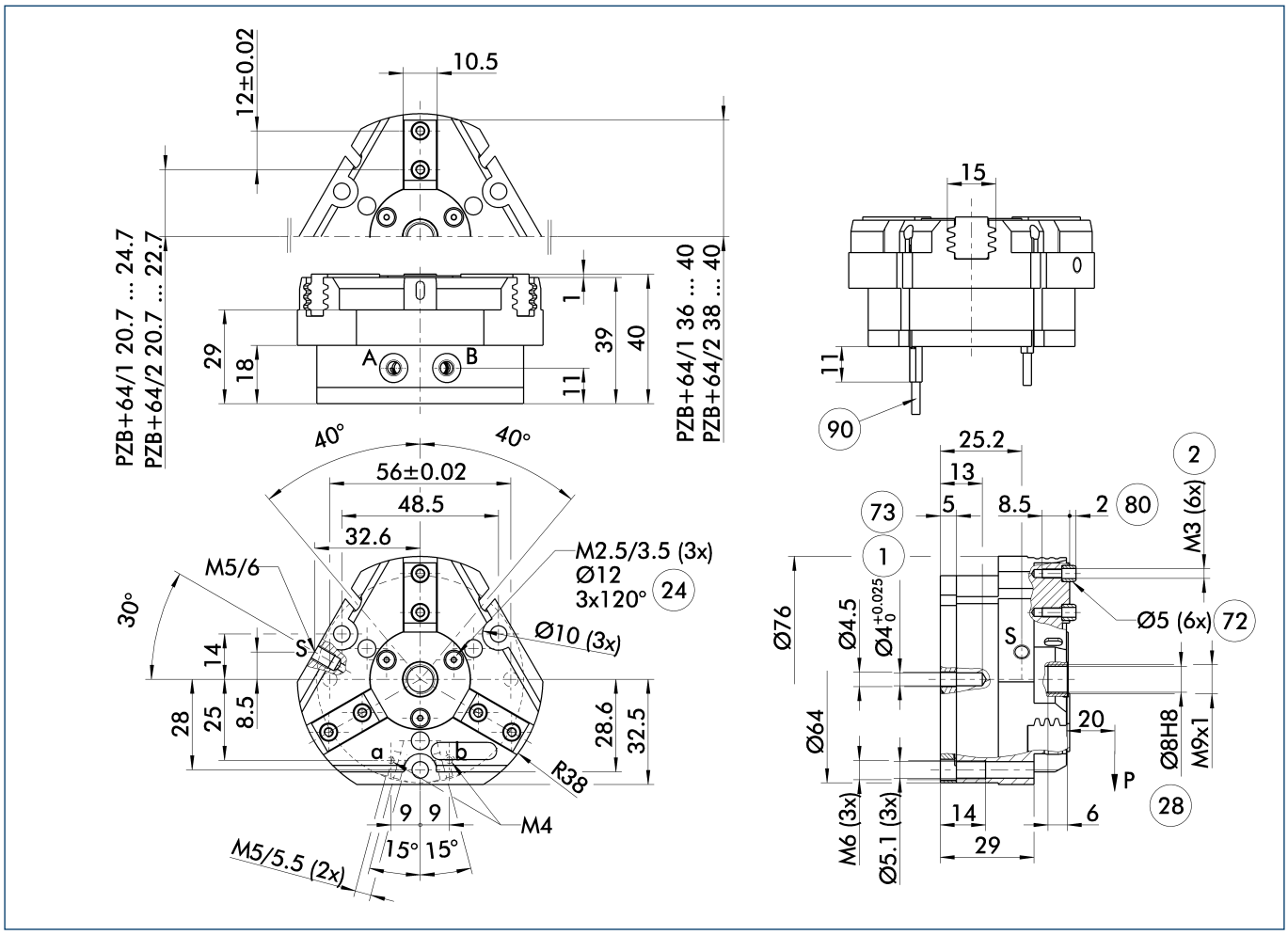

The drawing shows the gripper in the basic version with closed jaws, without dimensional consideration of the options described below.

ⓘ The SDV-P pressure maintenance valve can also be used for I.D. or O.D. gripping alternatively or in addition to the spring-loaded, mechanical gripping force maintenance device (see catalog section on "Accessories").

A, a Main / direct connection, gripper opening

B, b Main / direct connection, gripper closing

S Air purge connection (0.5 ... 1 bar)

(1) Gripper connection

(2) Finger connection

(24) Bolt circle

(28) Through-bore

(72) Fit for centering sleeves

(73) Fit for centering pins

(80) Depth of the centering sleeve hole in the mating part

(90) MMS 22... sensor

Hose-free direct connection M4

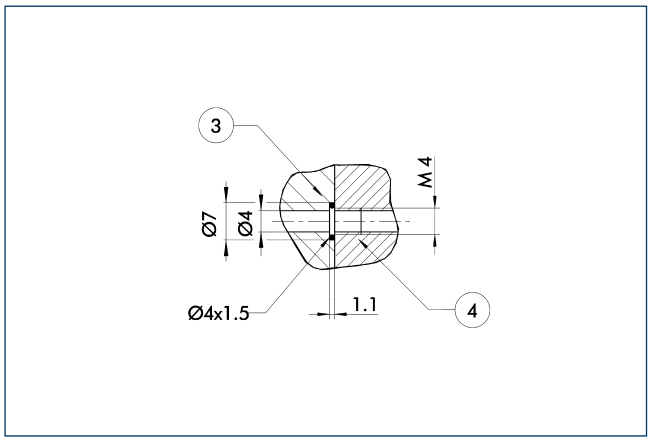

3 Adapter

4 Gripper

The direct connection is used for supplying compressed air without hoses. Instead, the pressure medium is fed through bore-holes in the mounting plate.

Gripping force maintenance device AS / IS

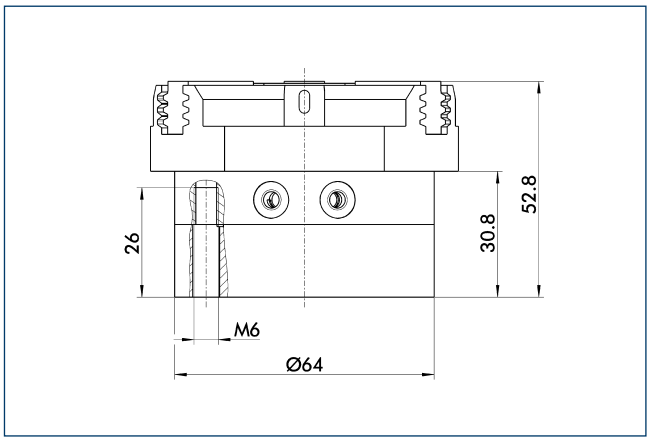

The mechanical maintenance of gripping force also assures a minimum gripping force in the case of a loss of pressure. With the AS / S variant, this acts as a closing force, and as an opening force for the IS variant. The maintenance of gripping force element can also be used as a means for increasing gripping force or for single actuated gripping.

Spring-loaded pressure piece

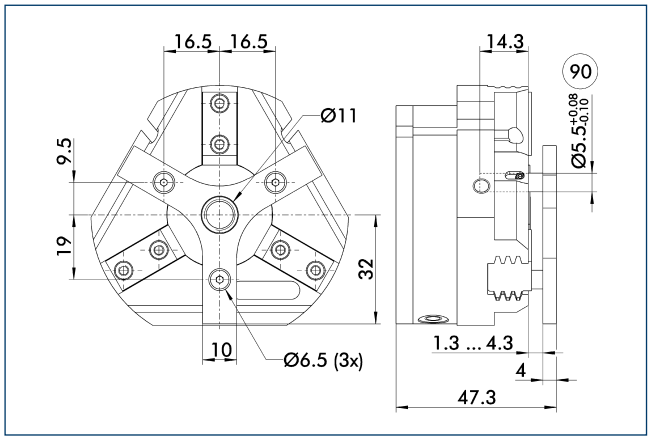

90 Guide pin

For spring-supported positioning of the workpiece against a stop after the gripper has opened. Especially developed for loading machines.

Description	ID	Stroke [mm]	Min. force [N]
Spring-loaded pressure piece			
A-PZB-plus 64	0305156	3	12

SDV-P pressure maintenance valve

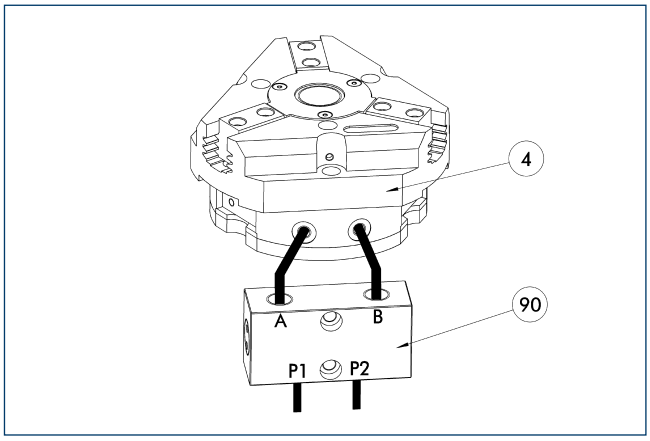

4 Gripper

90 SDV-P pressure maintenance valve

The SDV-P pressure maintenance valves ensure that the pressure in the piston chamber of pneumatic gripping, rotary, linear, and quick-change modules is maintained temporarily during an emergency stop.

Description	ID	
Pressure maintenance valve		
SDV-P 04	0403130	

BSWS jaw quick-change systems

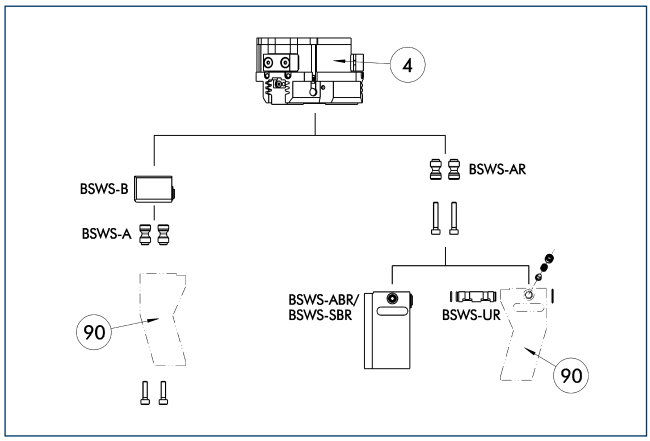

(4) Gripper
(90) Customized gripper fingers

There are various jaw quick-change systems available for the grippers. For detailed information, refer to the appropriate product.

Description	ID	
Jaw quick-change system adapter		
BSWS-AR 50	0300091	
BSWS-A 50	0303020	
Jaw quick-change system base		
BSWS-B 50	0303021	
Finger blanks with jaw quick-change system		
BSWS-ABR-PGZN-plus 50	0300071	
BSWS-SBR-PGZN-plus 50	0300081	
Jaw quick-change system reversed		
BSWS-UR 50	0302990	

ⓘ Only the systems listed in the table can be used.

ZBA L-plus 50 intermediate jaws

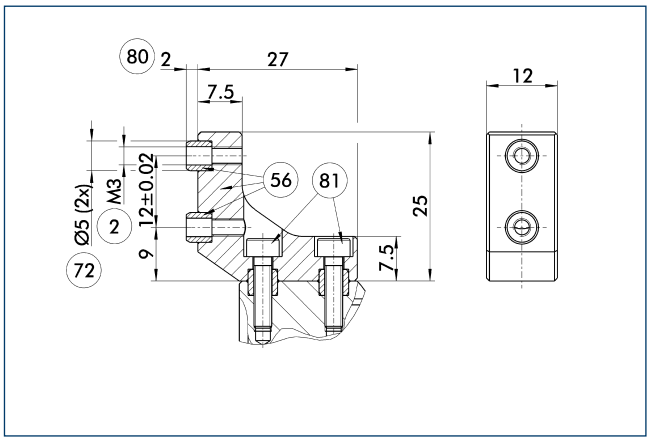

(2) Finger connection
(56) Included in delivery
(72) Fit for centering sleeves
(80) Depth of the centering sleeve hole in the mating part
(81) Not included in the scope of delivery

Optionally intermediate jaws can be used, enabling direct connection and alignment of top jaws and various standard accessories in Z-direction.

Description	ID	Material	Scope of delivery
Intermediate jaws			
ZBA-L-plus 50	0311712	Aluminum	1

UZB 50 universal intermediate jaw

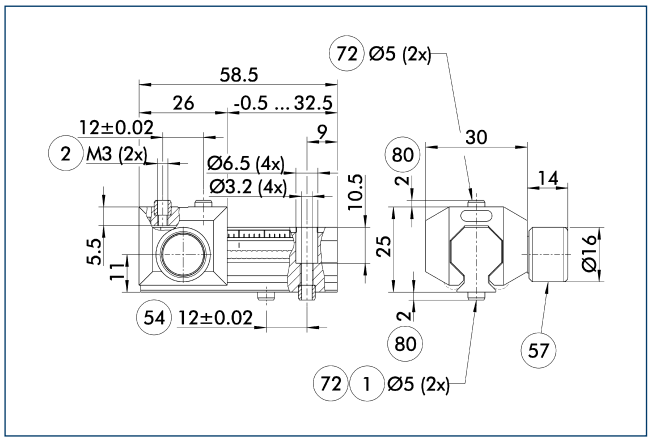

1 Gripper connection
2 Finger connection
54 Optional right or left connection
57 Locking
72 Fit for centering sleeves
80 Depth of the centering sleeve hole in the mating part

The universal intermediate jaw allows fast tool-free and reliable plugging and shifting of top jaws at the gripper.

Description	ID	Grid dimension [mm]
Universal intermediate jaw		
UZB 50	0300041	1.5
Finger blanks		
ABR-PGZN-plus 50	0300009	
SBR-PGZN-plus 50	0300019	

FMS-ZBA / ZBP 50 force-measuring jaws

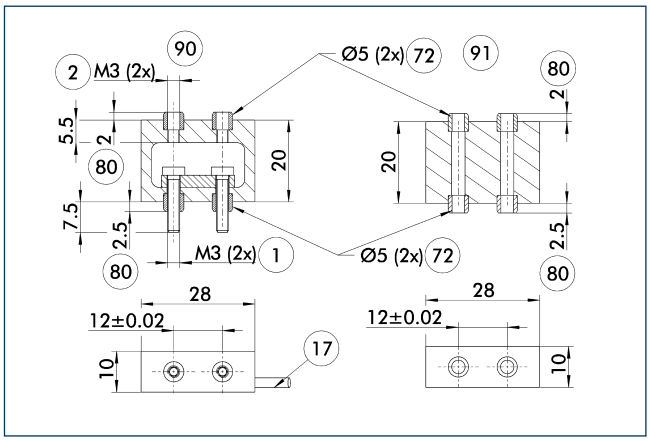

1 Gripper connection
2 Finger connection
17 Cable outlet
72 Fit for centering sleeves
80 Depth of the centering sleeve hole in the mating part
90 Active intermediate jaws
91 Passive intermediate jaws

Force measuring jaws measure gripping forces, but can also determine workpiece weights or dimensional deviations. There are active and passive intermediate jaws (FMS-ZBA or FMS-ZBP). At least one active force measuring jaw is required per gripper, the rest can be passive. For each active jaw, a FMS-A control unit and a FMS-AK connection cable are required.

Description	ID	Often combined
Active intermediate jaws		
FMS-ZBA 50	0301830	
Passive intermediate jaws		
FMS-ZBP 50	0301831	
Connection cables		
FMS-AK0200	0301820	●
FMS-AK0500	0301821	
FMS-AK1000	0301822	
FMS-AK2000	0301823	
Electronic processor		
FMS-A1	0301810	

ABR- / SBR-PGZN-plus 50 finger blanks

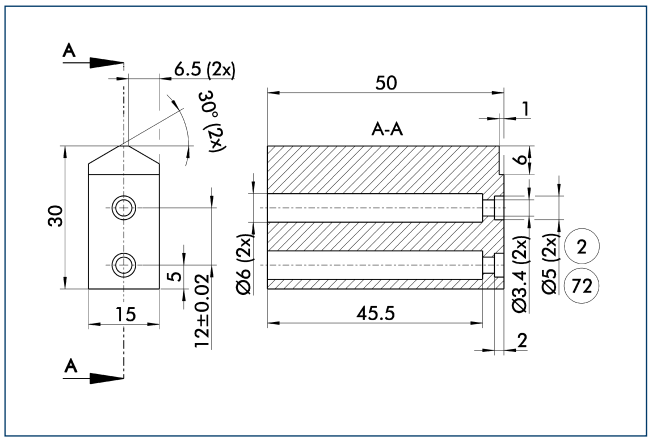

(2) Finger connection (72) Fit for centering sleeves

Finger blanks for customized subsequent machining.

Description	ID	Material	Scope of delivery
Finger blanks			
ABR-PGZN-plus 50	0300009	Aluminum	1
SBR-PGZN-plus 50	0300019	16MnCr5	1

MMS electronic magnetic switches

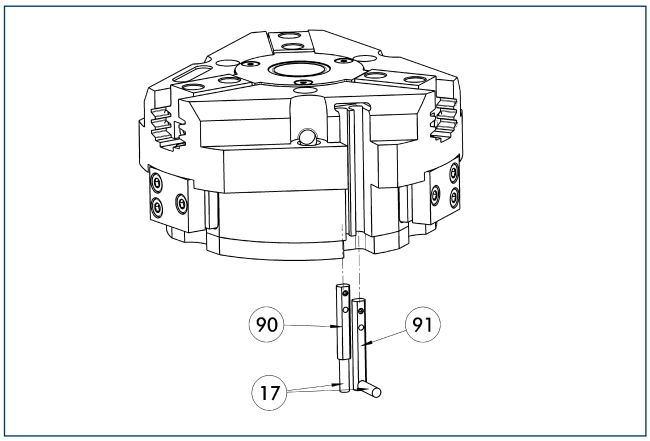

(17) Cable outlet (91) MMS 22...-SA sensor
(90) MMS 22... sensor

End position monitoring for mounting in the C-slot.

Description	ID	Often combined
MMS electronic magnetic switches		
MMS 22-S-M8-PNP	0301032	●
MMSK 22-S-PNP	0301034	
MMS electronic magnetic switches with lateral cable outlet		
MMS 22-S-M8-PNP-SA	0301042	●
MMSK 22-S-PNP-SA	0301044	
Cable extensions		
KV BW08-SG08 3P-0030-PNP	0301495	
KV BW08-SG08 3P-0100-PNP	0301496	
KV BW08-SG08 3P-0200-PNP	0301497	●
Clip for plug / socket		
CLI-M8	0301463	
Connection cables		
KA BG08-L 3P-0300-PNP	0301622	●
KA BG08-L 3P-0500-PNP	0301623	
KA BW08-L 3P-0300-PNP	0301594	
KA BW08-L 3P-0500-PNP	0301502	
Sensor distributor		
V2-M8	0301775	●
V4-M8	0301746	
V8-M8	0301751	

ⓘ Two sensors (closer/S) are required for each unit, plus extension cables as an option. Please note the minimum permitted bending radii for the sensor cables, which are generally 35 mm.

MMS PI1 programmable magnetic switches

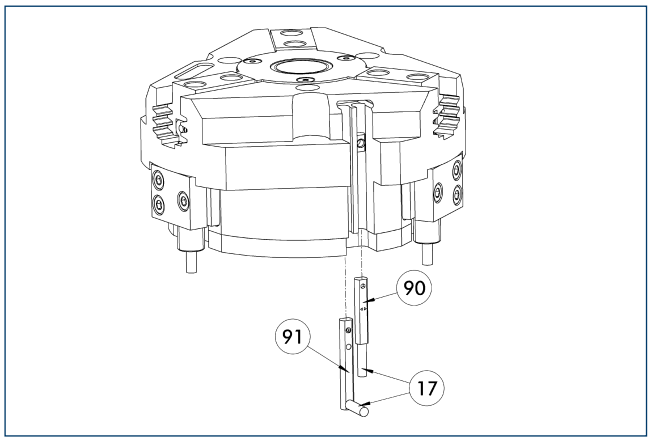

(17) Cable outlet
(91) MMS 22...-PI1-...-SA sensor
(90) MMS 22...-PI1-... sensor

Position query with one programmable position per sensor and electronics integrated in sensor. Programmable via MT magnet teaching tool (included in the scope of delivery) or ST plug teaching tool (optional). Limit position query mounted in C-groove. If the ST plug teaching tools are listed in the table, teaching can only take place with the ST plug teaching tools.

Description	ID	Often combined
Plug teaching tool		
ST-MMS 22-PI1-PNP	0301025	
MMS PI1 programmable magnetic switches		
MMS 22-PI1-S-M8-PNP	0301160	●
MMSK 22-PI1-S-PNP	0301162	
MMS PI1-HD programmable magnetic switches with stainless steel housing		
MMS 22-PI1-S-M8-PNP-HD	0301110	●
MMSK 22-PI1-S-PNP-HD	0301112	
MMS PI1 programmable magnetic switches with lateral cable outlet		
MMS 22-PI1-S-M8-PNP-SA	0301166	●
MMSK 22-PI1-S-PNP-SA	0301168	

ⓘ Two sensors (closer/S) are required for each unit, plus extension cables as an option. Please note the minimum permitted bending radii for the sensor cables, which are generally 35 mm. Connection cable, cable extensions, and sensor distributors can be found in the table for the MMS 22.

MMS PI2 programmable magnetic switches

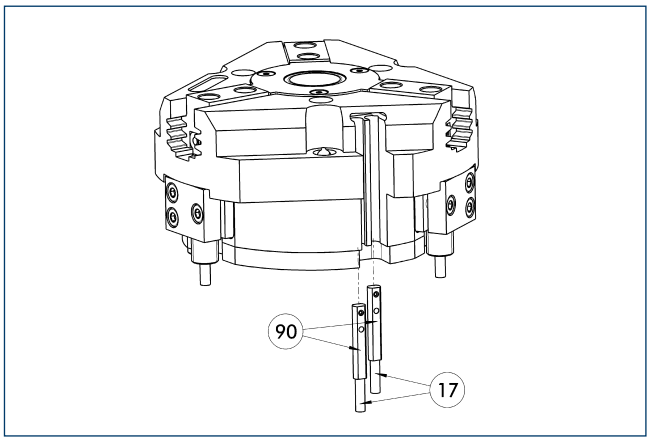

(17) Cable outlet
(90) MMS 22...-PI2-... sensor

Position query with two programmable positions per sensor and electronics integrated in sensor. Programmable via MT magnet teaching tool (included in the scope of delivery) or ST plug teaching tool (optional). Limit position query mounted in C-groove. If the ST plug teaching tools are listed in the table, teaching can only take place with the ST plug teaching tools.

Description	ID	Often combined
Plug teaching tool		
ST-MMS 22-PI2-PNP	0301026	
MMS PI2 programmable magnetic switches		
MMS 22-PI2-S-M8-PNP	0301180	●
MMSK 22-PI2-S-PNP	0301182	
MMS PI2-HD programmable magnetic switches with stainless steel housing		
MMS 22-PI2-S-M8-PNP-HD	0301130	●
MMSK 22-PI2-S-PNP-HD	0301132	

ⓘ Per unit one sensor (closer/S) is required, optionally a cable extension. Please note the minimum permitted bending radii for the sensor cables, which are generally 35 mm. Connection cable, cable extensions, and sensor distributors can be found in the table for the MMS-P 22.

MMS-P programmable magnetic switches

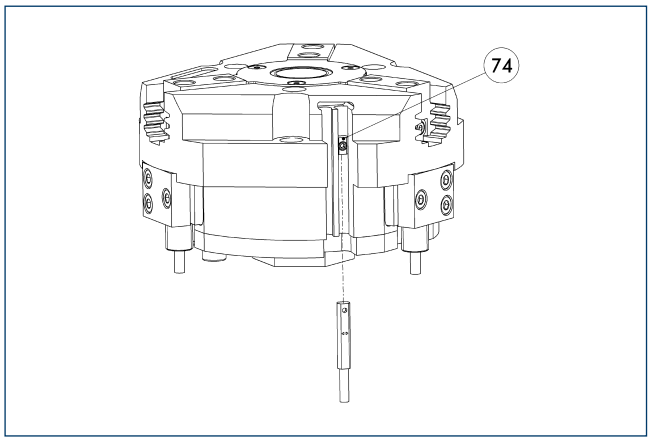

74 Stop for MMS-P

Position monitoring with two programmable positions per sensor. The end position monitoring is mounted in the C-slot.

Description	ID	Often combined
MMS-P programmable magnetic switches		
MMSK-P 22-S-PNP	0301371	
MMS-P 22-S-M8-PNP	0301370	●
Clip for plug / socket		
CLI-M8	0301463	
Connection cables		
KA BG08-L 4P-0500	0307767	●
KA BG08-L 4P-1000	0307768	
KA BW08-L 4P-0500	0307765	
KA BW08-L 4P-1000	0307766	
Sensor distributor		
V2-M8-4P-2XM8-3P	0301380	

ⓘ Per unit one sensor (closer/S) is required, optionally a cable extension. Please note the minimum permitted bending radii for the sensor cables, which are generally 35 mm.

PZB-plus 80

SCHUNK Grippers pneumatic | 3-Finger Centric Grippers | Universal Gripper

Gripping force, O.D. gripping

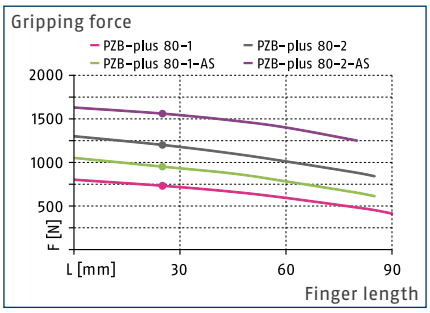

Gripping force, I.D. gripping

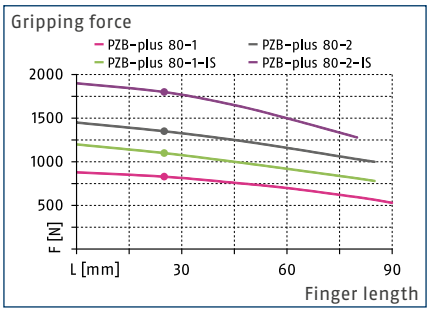

Finger load

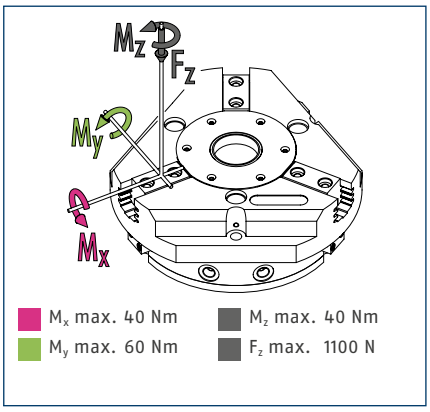

ⓘ The indicated moments and forces are static values, apply per base jaw and may occur simultaneously. M_y may arise in addition to the moment generated by the gripping force itself. If the max. permitted finger weight is exceeded, it is impreative to throttle the air supply so that the jaw movement occurs without any hitting or bouncing. Service life may be reduced.

Technical data

Description		PZB-plus 80-1	PZB-plus 80-2	PZB-plus 80-1-AS	PZB-plus 80-2-AS	PZB-plus 80-1-IS	PZB-plus 80-2-IS
ID		0305160	0305161	0305162	0305163	0305164	0305165
Stroke per jaw	[mm]	6	3	6	3	6	3
Closing- / opening force	[N]	730/830	1200/1350	950/-	1560/-	-/1030	-/1750
min. spring force	[N]			220	360	200	400
Weight	[kg]	0.8	0.8	1.1	1.1	1.1	1.1
Recommended workpiece weight	[kg]	3.6	6	3.6	6	3.6	6
Fluid consumption per double stroke	[cm³]	42	42	75	75	75	75
min. / max. operating pressure	[bar]	2/8	2/8	4/6.5	4/6.5	4/6.5	4/6.5
Nominal operating pressure	[bar]	6	6	6	6	6	6
Closing- / opening time	[s]	0.05/0.05	0.05/0.05	0.03/0.05	0.03/0.05	0.06/0.04	0.06/0.04
Closing- / opening time only with spring	[s]			0.19	0.19	0.19	0.19
max. permitted finger length	[mm]	90	85	85	80	85	80
max. permitted weight per finger	[kg]	0.35	0.35	0.35	0.35	0.35	0.35
IP class		40	40	40	40	40	40
min. / max. ambient temperature	[°C]	5/90	5/90	5/90	5/90	5/90	5/90
Repeat accuracy	[mm]	0.01	0.01	0.01	0.01	0.01	0.01
Diameter of center bore	[mm]	15	15	15	15	15	15

Main view

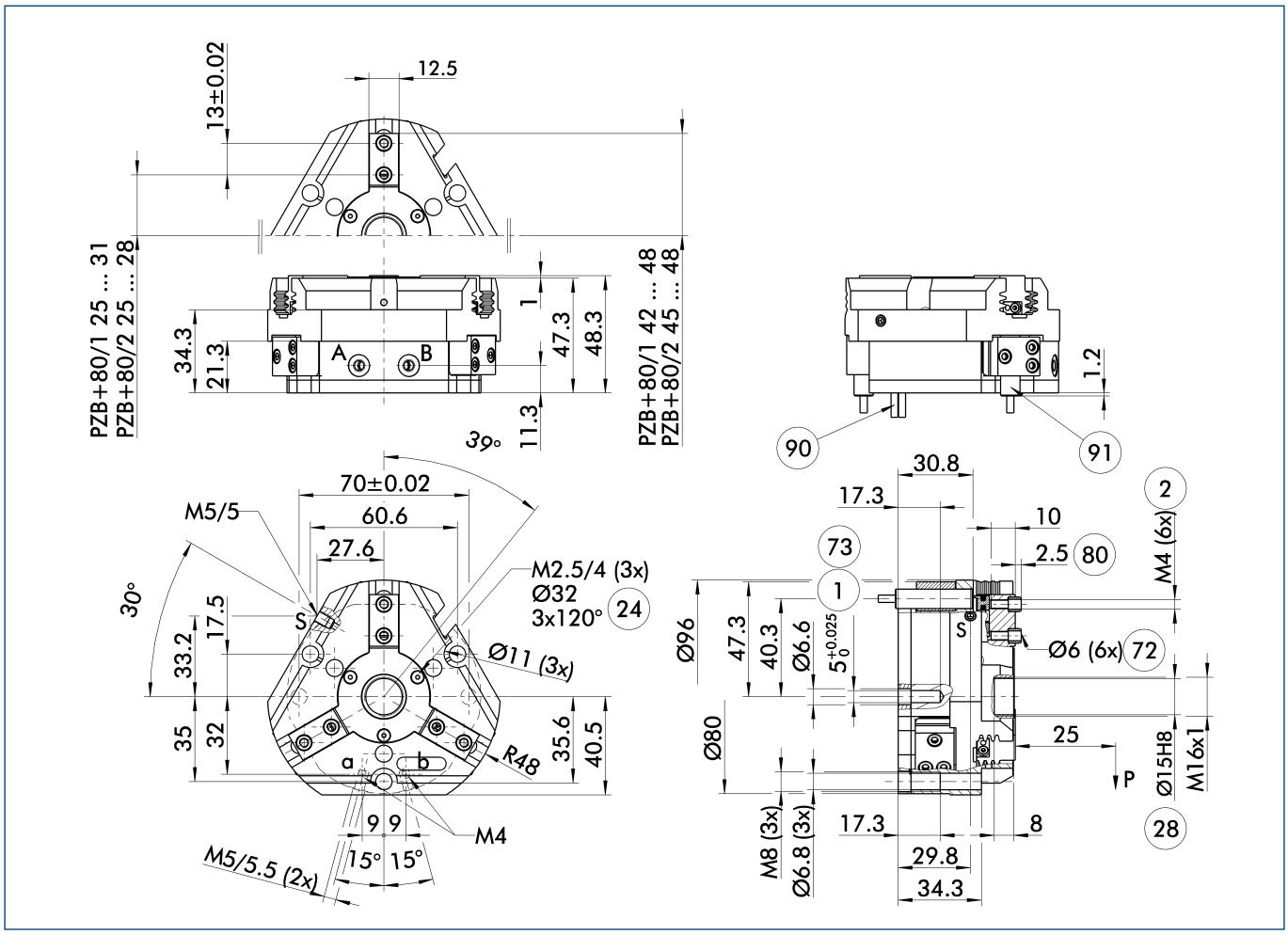

The drawing shows the gripper in the basic version with closed jaws, without dimensional consideration of the options described below.

ⓘ The SDV-P pressure maintenance valve can also be used for I.D. or O.D. gripping alternatively or in addition to the spring-loaded, mechanical gripping force maintenance device (see catalog section on "Accessories").

A, a Main / direct connection, gripper opening

B, b Main / direct connection, gripper closing

S Air purge connection (0.5 ... 1 bar)

(1) Gripper connection

(2) Finger connection

(24) Bolt circle

(28) Through-bore

(72) Fit for centering sleeves

(73) Fit for centering pins

(80) Depth of the centering sleeve hole in the mating part

(90) MMS 22... sensor

(91) IN ... sensor

Hose-free direct connection M4

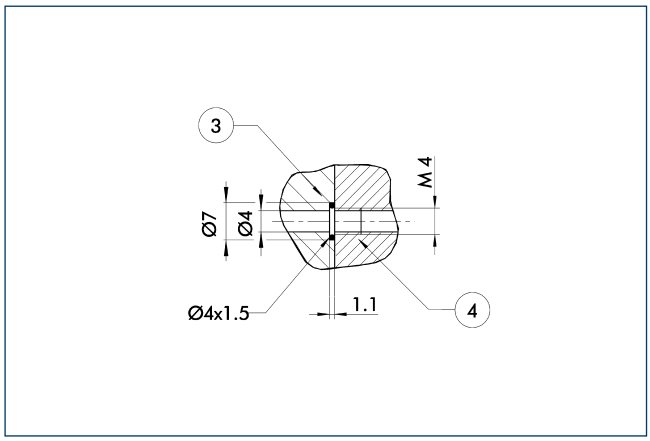

3 Adapter

4 Gripper

The direct connection is used for supplying compressed air without hoses. Instead, the pressure medium is fed through bore-holes in the mounting plate.

Gripping force maintenance device AS / IS

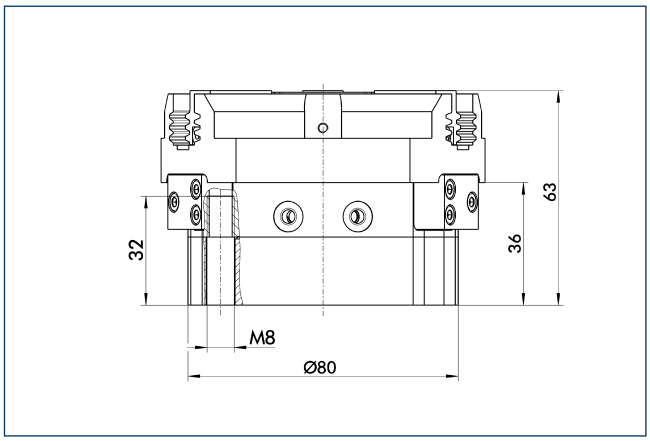

The mechanical maintenance of gripping force also assures a minimum gripping force in the case of a loss of pressure. With the AS / S variant, this acts as a closing force, and as an opening force for the IS variant. The maintenance of gripping force element can also be used as a means for increasing gripping force or for single actuated gripping.

Spring-loaded pressure piece

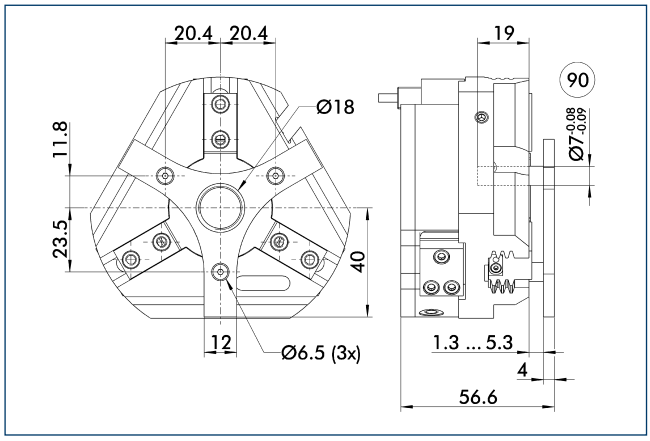

90 Guide pin

For spring-supported positioning of the workpiece against a stop after the gripper has opened. Especially developed for loading machines.

Description	ID	Stroke [mm]	Min. force [N]
Spring-loaded pressure piece			
A-PZB-plus 80	0305166	4	11

SDV-P pressure maintenance valve

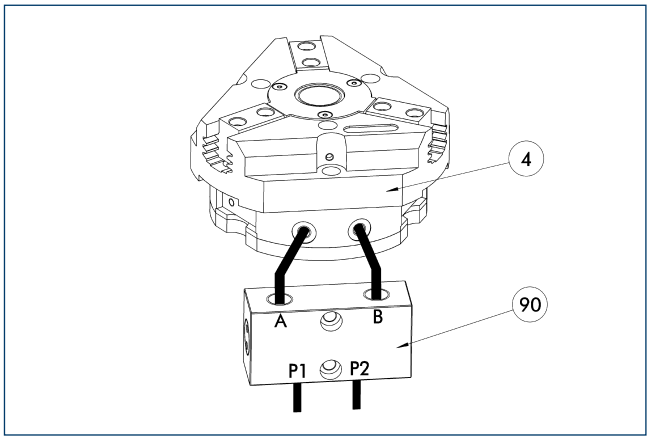

4 Gripper

90 SDV-P pressure maintenance valve

The SDV-P pressure maintenance valves ensure that the pressure in the piston chamber of pneumatic gripping, rotary, linear, and quick-change modules is maintained temporarily during an emergency stop.

Description	ID	
Pressure maintenance valve		
SDV-P 04	0403130	

BSWS jaw quick-change systems

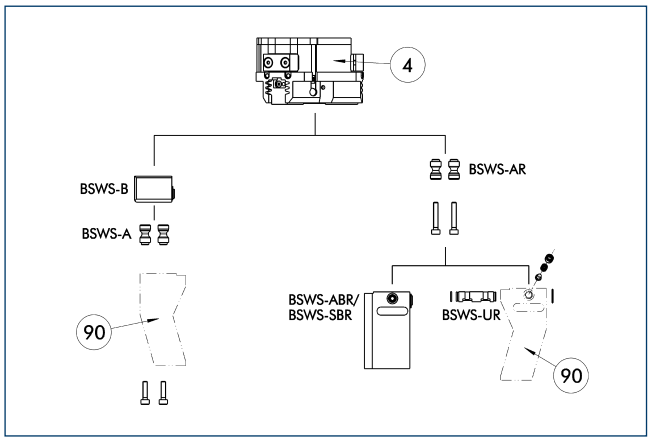

(4) Gripper
(90) Customized gripper fingers

There are various jaw quick-change systems available for the grippers. For detailed information, refer to the appropriate product.

Description	ID	
Jaw quick-change system adapter		
BSWS-AR 64	0300092	
BSWS-A 64	0303022	
Jaw quick-change system base		
BSWS-B 64	0303023	
Finger blanks with jaw quick-change system		
BSWS-ABR-PGZN-plus 64	0300072	
BSWS-SBR-PGZN-plus 64	0300082	
Jaw quick-change system reversed		
BSWS-UR 64	0302991	

ⓘ Only the systems listed in the table can be used.

ZBA L-plus 64 intermediate jaws

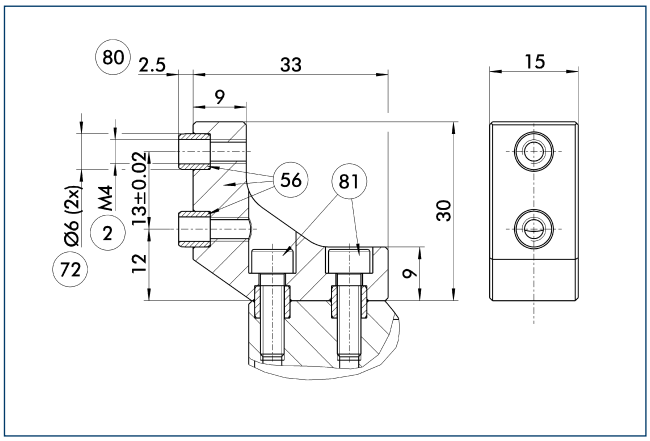

(2) Finger connection
(56) Included in delivery
(72) Fit for centering sleeves
(80) Depth of the centering sleeve hole in the mating part
(81) Not included in the scope of delivery

Optionally intermediate jaws can be used, enabling direct connection and alignment of top jaws and various standard accessories in Z-direction.

Description	ID	Material	Scope of delivery
Intermediate jaws			
ZBA-L-plus 64	0311722	Aluminum	1

UZB 64 universal intermediate jaw

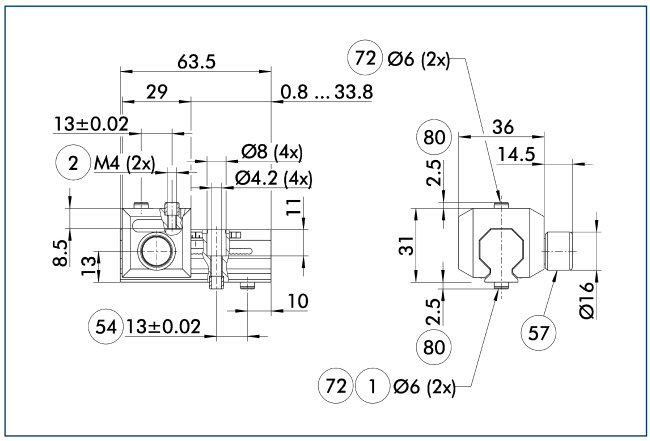

1 Gripper connection
2 Finger connection
54 Optional right or left connection
57 Locking
72 Fit for centering sleeves
80 Depth of the centering sleeve hole in the mating part

The universal intermediate jaw allows fast tool-free and reliable plugging and shifting of top jaws at the gripper.

Description	ID	Grid dimension [mm]
Universal intermediate jaw		
UZB 64	0300042	1.5
Finger blanks		
ABR-PGZN-plus 64	0300010	
SBR-PGZN-plus 64	0300020	

FMS-ZBA / ZBP 64 force-measuring jaws

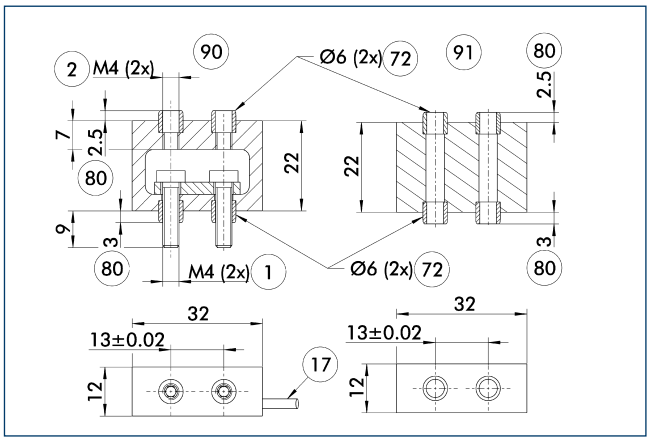

1 Gripper connection
2 Finger connection
17 Cable outlet
72 Fit for centering sleeves
80 Depth of the centering sleeve hole in the mating part
90 Active intermediate jaws
91 Passive intermediate jaws

Force measuring jaws measure gripping forces, but can also determine workpiece weights or dimensional deviations. There are active and passive intermediate jaws (FMS-ZBA or FMS-ZBP). At least one active force measuring jaw is required per gripper, the rest can be passive. For each active jaw, a FMS-A control unit and a FMS-AK connection cable are required.

Description	ID	Often combined
Active intermediate jaws		
FMS-ZBA 64	0301832	
Passive intermediate jaws		
FMS-ZBP 64	0301833	
Connection cables		
FMS-AK0200	0301820	●
FMS-AK0500	0301821	
FMS-AK1000	0301822	
FMS-AK2000	0301823	
Electronic processor		
FMS-A1	0301810	

ABR- / SBR-PGZN-plus 64 finger blanks

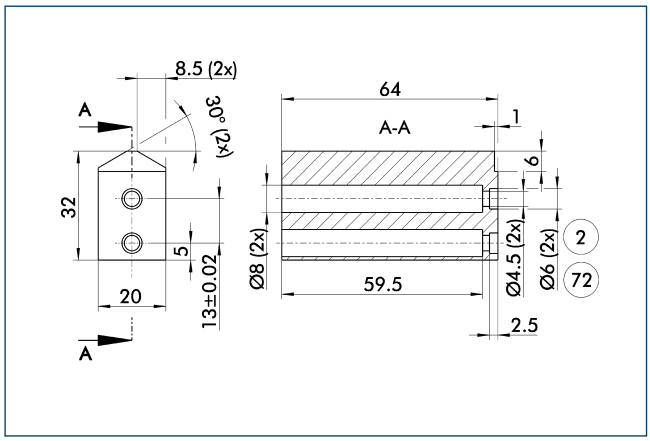

(2) Finger connection (72) Fit for centering sleeves

Finger blanks for customized subsequent machining.

Description	ID	Material	Scope of delivery
Finger blanks			
ABR-PGZN-plus 64	0300010	Aluminum	1
SBR-PGZN-plus 64	0300020	16MnCr5	1

Inductive proximity switches

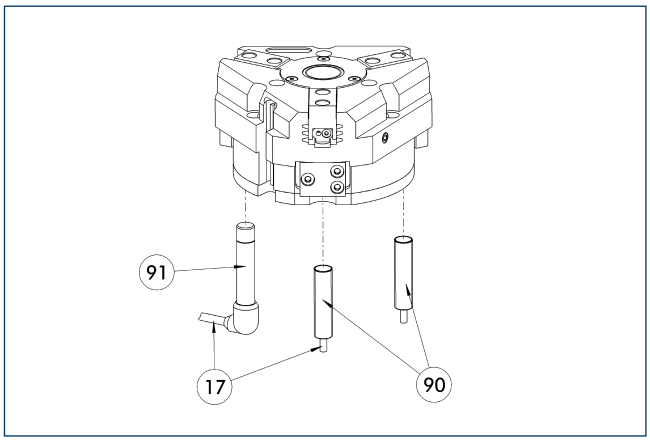

(17) Cable outlet (91) IN ...-SA sensor
(90) IN ... sensor

Directly mounted limit position monitor.

Description	ID	Often combined
Inductive proximity switches		
IN 80-S-M12	0301578	
IN 80-S-M8	0301478	●
IN-C 80-S-M8	0301475	
INK 80-S	0301550	
Inductive proximity switches with lateral outlet		
IN 80-S-M12-SA	0301587	
IN 80-S-M8-SA	0301483	●
INK 80-S-SA	0301566	
Cable extensions		
KV BG12-SG12 3P-0030-PNP	0301999	
KV BG12-SG12 3P-0060-PNP	0301998	
KV BW08-SG08 3P-0030-PNP	0301495	
KV BW08-SG08 3P-0100-PNP	0301496	
KV BW08-SG08 3P-0200-PNP	0301497	●
KV BW12-SG12 3P-0030-PNP	0301595	
KV BW12-SG12 3P-0100-PNP	0301596	
KV BW12-SG12 3P-0200-PNP	0301597	
Clip for plug / socket		
CLI-M12	0301464	
CLI-M8	0301463	
Connection cables		
KA BG08-L 3P-0300-PNP	0301622	●
KA BG08-L 3P-0500-PNP	0301623	
KA BG12-L 3P-0500-PNP	30016369	
KA BW08-L 3P-0300-PNP	0301594	
KA BW08-L 3P-0500-PNP	0301502	
KA BW12-L 3P-0300-PNP	0301503	
KA BW12-L 3P-0500-PNP	0301507	
Sensor distributor		
V2-M8	0301775	●
V2-M12	0301776	●
V4-M12	0301747	

ⓘ Two sensors (closer/S) are required for each unit, plus extension cables as an option. Please note the minimum permitted bending radii for the sensor cables, which are generally 35 mm.

Flexible position sensor

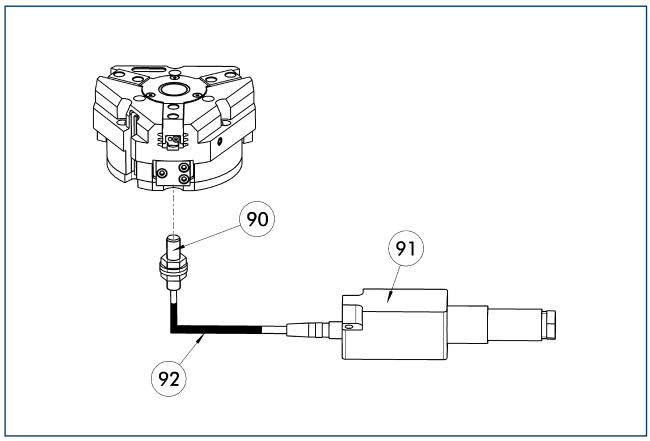

(90) FPS-S sensor
(91) FPS-F5 / -F5 T electronic processor
(92) Cable extensions

Flexible position monitoring of up to five positions.

Description	ID	Often combined
Mounting kit for FPS		
AS-FPS-PGZN-plus 64-1/80-2	0301630	
Electronic processor		
FPS-F5	0301805	●
FPS-F5 T	0301807	
Sensor		
FPS-S M8	0301704	
Clip for plug / socket		
CLI-M8	0301463	

ⓘ When using a FPS system, a FPS sensor (FPS-S) and a control unit (FPS-F5 / F5 T) are required for each gripper as well as a mounting kit (AS), if listed. Cable extensions (KV) are available as options in the "Accessories" catalog section.

MMS electronic magnetic switches

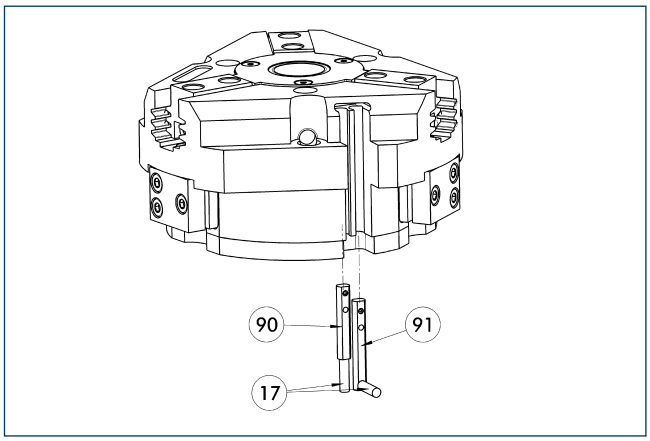

(17) Cable outlet
(90) MMS 22... sensor
(91) MMS 22...-SA sensor

End position monitoring for mounting in the C-slot.

Description	ID	Often combined
MMS electronic magnetic switches		
MMS 22-S-M8-PNP	0301032	●
MMSK 22-S-PNP	0301034	
MMS electronic magnetic switches with lateral cable outlet		
MMS 22-S-M8-PNP-SA	0301042	●
MMSK 22-S-PNP-SA	0301044	
Cable extensions		
KV BW08-SG08 3P-0030-PNP	0301495	
KV BW08-SG08 3P-0100-PNP	0301496	
KV BW08-SG08 3P-0200-PNP	0301497	●
Clip for plug / socket		
CLI-M8	0301463	
Connection cables		
KA BG08-L 3P-0300-PNP	0301622	●
KA BG08-L 3P-0500-PNP	0301623	
KA BW08-L 3P-0300-PNP	0301594	
KA BW08-L 3P-0500-PNP	0301502	
Sensor distributor		
V2-M8	0301775	●
V4-M8	0301746	
V8-M8	0301751	

ⓘ Two sensors (closer/S) are required for each unit, plus extension cables as an option. Please note the minimum permitted bending radii for the sensor cables, which are generally 35 mm.

MMS PI1 programmable magnetic switches

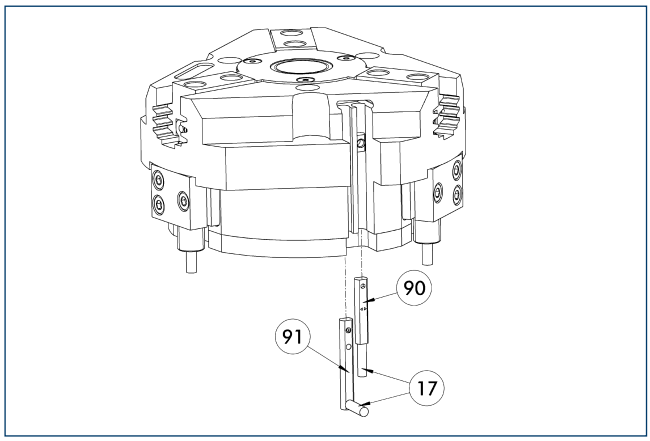

17 Cable outlet
91 MMS 22...-PI1-...-SA sensor
90 MMS 22...-PI1-... sensor

Position query with one programmable position per sensor and electronics integrated in sensor. Programmable via MT magnet teaching tool (included in the scope of delivery) or ST plug teaching tool (optional). Limit position query mounted in C-groove. If the ST plug teaching tools are listed in the table, teaching can only take place with the ST plug teaching tools.

Description	ID	Often combined
MMS PI1 programmable magnetic switches		
MMS 22-PI1-S-M8-PNP	0301160	●
MMSK 22-PI1-S-PNP	0301162	
MMS PI1-HD programmable magnetic switches with stainless steel housing		
MMS 22-PI1-S-M8-PNP-HD	0301110	●
MMSK 22-PI1-S-PNP-HD	0301112	
MMS PI1 programmable magnetic switches with lateral cable outlet		
MMS 22-PI1-S-M8-PNP-SA	0301166	●
MMSK 22-PI1-S-PNP-SA	0301168	

ⓘ Two sensors (closer/S) are required for each unit, plus extension cables as an option. Please note the minimum permitted bending radii for the sensor cables, which are generally 35 mm. Connection cable, cable extensions, and sensor distributors can be found in the table for the MMS 22.

MMS PI2 programmable magnetic switches

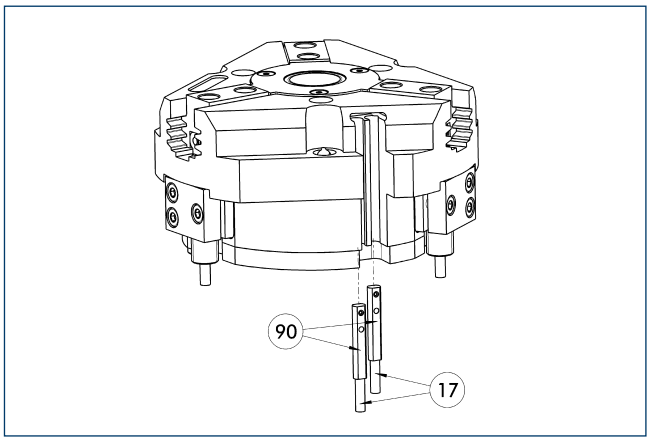

17 Cable outlet
90 MMS 22...-PI2-... sensor

Position query with two programmable positions per sensor and electronics integrated in sensor. Programmable via MT magnet teaching tool (included in the scope of delivery) or ST plug teaching tool (optional). Limit position query mounted in C-groove. If the ST plug teaching tools are listed in the table, teaching can only take place with the ST plug teaching tools.

Description	ID	Often combined
MMS PI2 programmable magnetic switches		
MMS 22-PI2-S-M8-PNP	0301180	●
MMSK 22-PI2-S-PNP	0301182	
MMS PI2-HD programmable magnetic switches with stainless steel housing		
MMS 22-PI2-S-M8-PNP-HD	0301130	●
MMSK 22-PI2-S-PNP-HD	0301132	

ⓘ Per unit one sensor (closer/S) is required, optionally a cable extension. Please note the minimum permitted bending radii for the sensor cables, which are generally 35 mm. Connection cable, cable extensions, and sensor distributors can be found in the table for the MMS-P 22.

MMS-P programmable magnetic switches

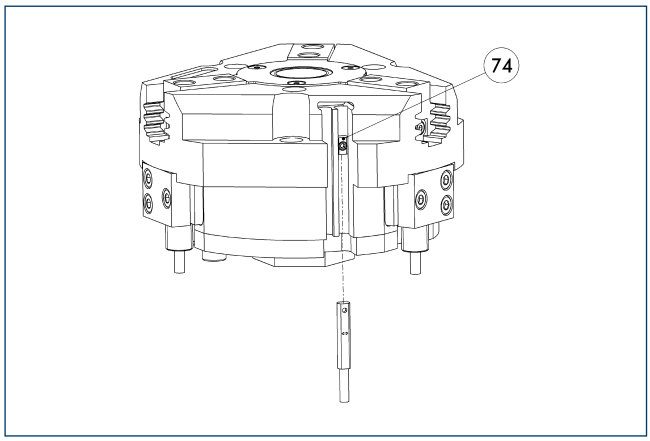

74 Stop for MMS-P

Position monitoring with two programmable positions per sensor. The end position monitoring is mounted in the C-slot.

Description	ID	Often combined
MMS-P programmable magnetic switches		
MMSK-P 22-S-PNP	0301371	
MMS-P 22-S-M8-PNP	0301370	●
Clip for plug / socket		
CLI-M8	0301463	
Connection cables		
KA BG08-L 4P-0500	0307767	●
KA BG08-L 4P-1000	0307768	
KA BW08-L 4P-0500	0307765	
KA BW08-L 4P-1000	0307766	
Sensor distributor		
V2-M8-4P-2XM8-3P	0301380	

ⓘ Per unit one sensor (closer/S) is required, optionally a cable extension. Please note the minimum permitted bending radii for the sensor cables, which are generally 35 mm.

APS-Z80 analog position sensor

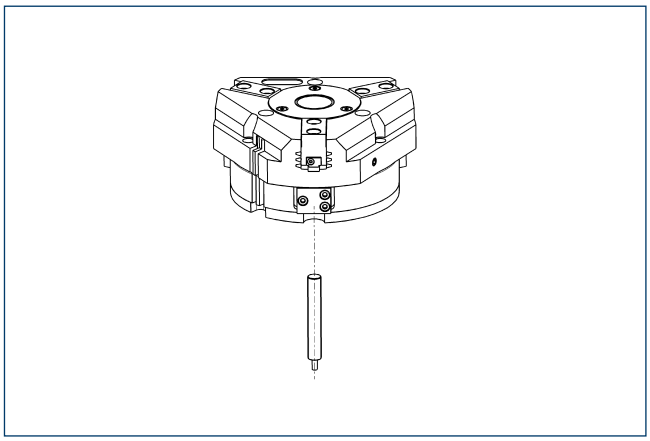

Contactlessly measuring, analog multi-position monitoring for any number of positions.

Description	ID	Often combined
Mounting kit for APS-Z80		
AS-APS-Z80-PGZN-plus 64-1	0302105	
AS-APS-Z80-PGZN-plus 64-2	0302106	
Sensor		
APS-Z80-K	0302072	
APS-Z80-M8	0302070	●

ⓘ When using an APS system, one mounting kit (AS-APS-Z80) and one APS-Z80 sensor is required per gripper.

APS-M1 analog position sensor

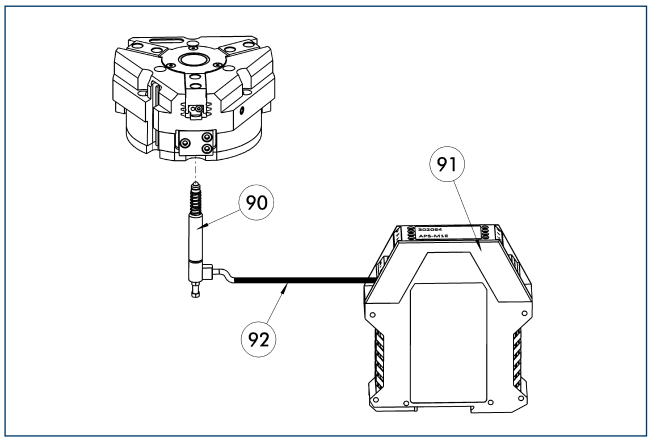

(90) APS-M1S sensor
(91) APS-M1E electronic processor
(92) APS-K extension cable

Analog multi position monitoring for any desired positions.

Description	ID	Often combined
Mounting kit for APS-M1		
AS-APS-M1-PGZN-plus 64-1	0302075	
AS-APS-M1-PGZN-plus 64-2	0302076	
Connection cables		
APS-K0200	0302066	●
APS-K0700	0302068	
Electronic processor		
APS-M1E	0302064	
Sensor		
APS-M1S	0302062	

ⓘ When using an APS system, for each gripper a mounting kit (AS-APS-M1), an APS-M1S sensor (incl. 3 m cable) as well as an electronics (APS-M1e) are required. An extension cable (APS-K) can be connected between the sensor and the electronics as an option. The max. cable length between the sensor and the electronics is 10 m, between the electronics and their control unit (PLC) it is max. 1 m.

Cylindrical reed switches

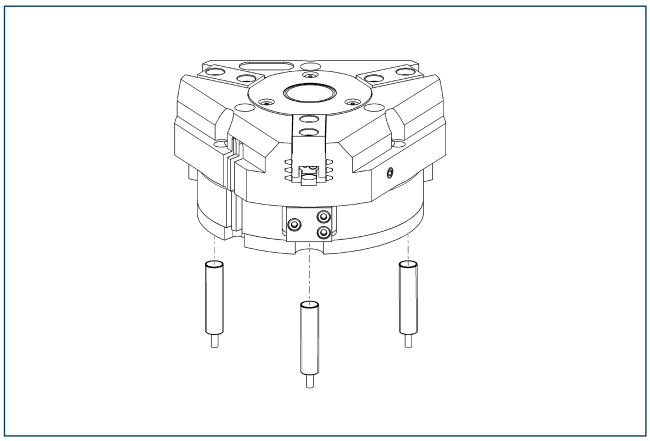

Limit position monitor can be mounted with mounting kit.

Description	ID	
Mounting kit for proximity switch		
AS-RMS 80 PGN/PZN-plus 64/80	0377725	
Reed switches		
RMS 80-S-M8	0377721	

ⓘ Two sensors (closer/S) are required for each unit, plus extension cables as an option. This mounting kit needs to be ordered optionally as an accessory. Two mounting kits are required per gripper. Please note the minimum permitted bending radii for the sensor cables, which are generally 35 mm.

PZB-plus 100

SCHUNK Grippers pneumatic | 3-Finger Centric Grippers | Universal Gripper

Gripping force, O.D. gripping

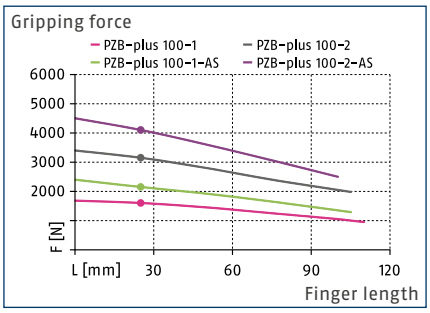

Gripping force, I.D. gripping

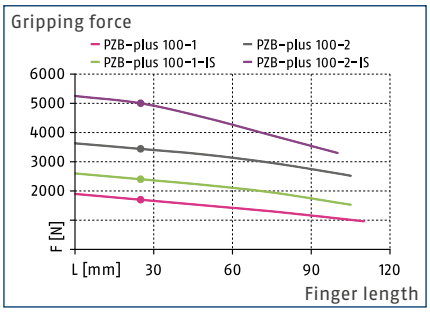

Finger load

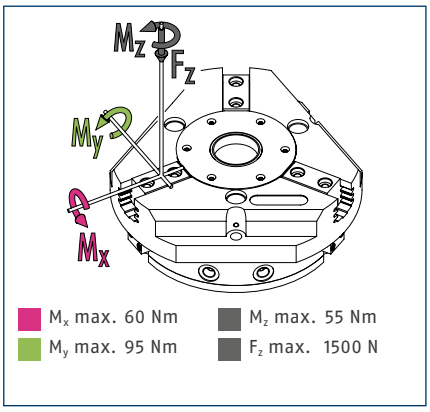

ⓘ The indicated moments and forces are static values, apply per base jaw and may occur simultaneously. M_y may arise in addition to the moment generated by the gripping force itself. If the max. permitted finger weight is exceeded, it is impreative to throttle the air supply so that the jaw movement occurs without any hitting or bouncing. Service life may be reduced.

Technical data

Description		PZB-plus 100-1	PZB-plus 100-2	PZB-plus 100-1-AS	PZB-plus 100-2-AS	PZB-plus 100-1-IS	PZB-plus 100-2-IS
ID		0305170	0305171	0305172	0305173	0305174	0305175
Stroke per jaw	[mm]	8	4	8	4	8	4
Closing- / opening force	[N]	1600/1700	3150/3400	2100/-	4050/-	-/2380	-/4900
min. spring force	[N]			500	900	680	1500
Weight	[kg]	1.5	1.5	2.3	2.3	2.3	2.3
Recommended workpiece weight	[kg]	8	15	8	15	8	15
Fluid consumption per double stroke	[cm³]	92	92	185	185	185	185
min. / max. operating pressure	[bar]	2/8	2/8	4/6.5	4/6.5	4/6.5	4/6.5
Nominal operating pressure	[bar]	6	6	6	6	6	6
Closing- / opening time	[s]	0.1/0.1	0.1/0.1	0.1/0.2	0.1/0.2	0.2/0.1	0.2/0.1
Closing- / opening time only with spring	[s]			0.25	0.25	0.25	0.25
max. permitted finger length	[mm]	110	105	105	100	105	100
max. permitted weight per finger	[kg]	0.6	0.6	0.6	0.6	0.6	0.6
IP class		40	40	40	40	40	40
min. / max. ambient temperature	[°C]	5/90	5/90	5/90	5/90	5/90	5/90
Repeat accuracy	[mm]	0.01	0.01	0.01	0.01	0.01	0.01
Diameter of center bore	[mm]	20	20	20	20	20	20

Main view

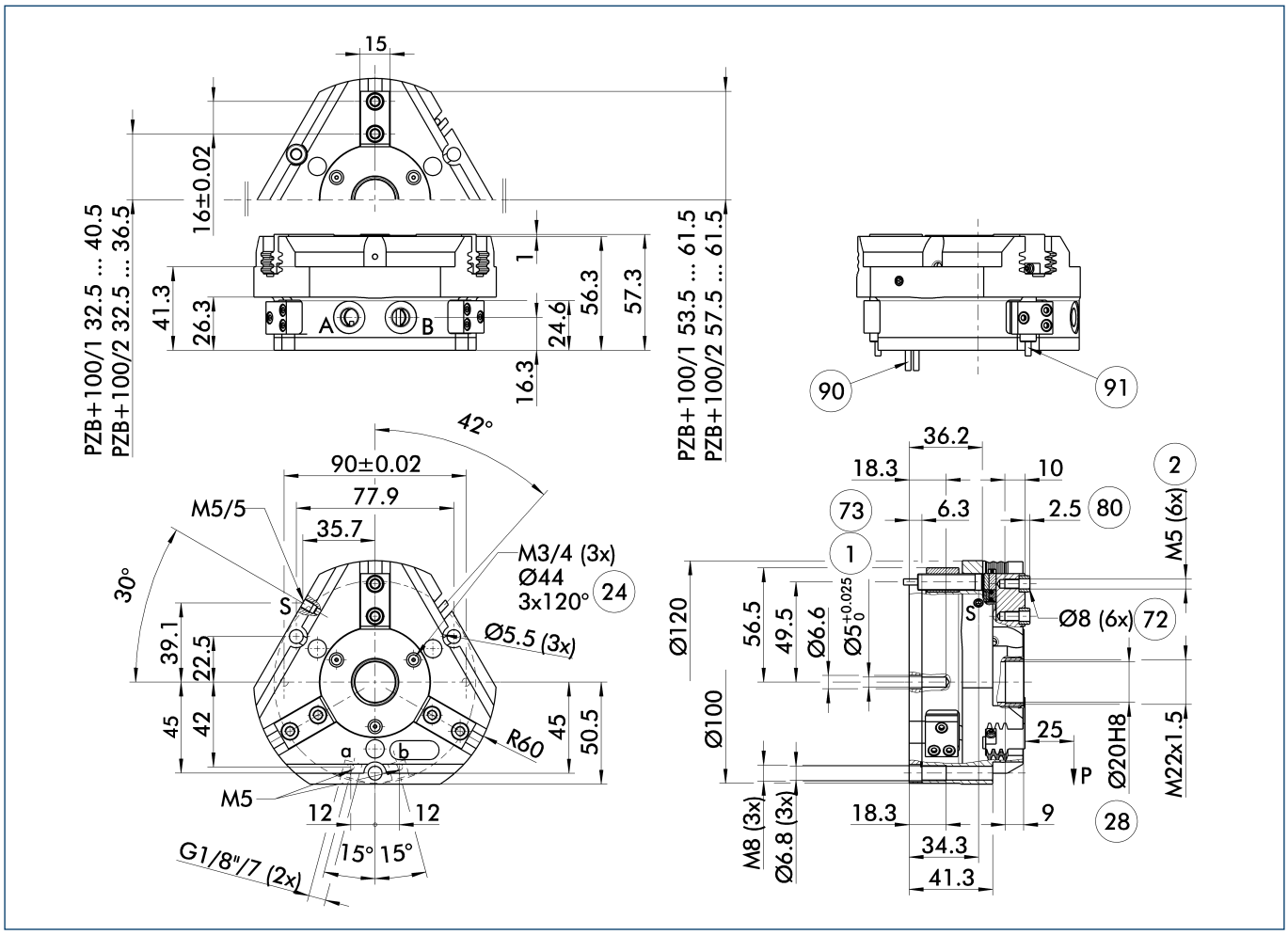

The drawing shows the gripper in the basic version with closed jaws, without dimensional consideration of the options described below.

ⓘ The SDV-P pressure maintenance valve can also be used for I.D. or O.D. gripping alternatively or in addition to the spring-loaded, mechanical gripping force maintenance device (see catalog section on "Accessories").

A, a Main / direct connection, gripper opening

B, b Main / direct connection, gripper closing

S Air purge connection (0.5 ... 1 bar)

(1) Gripper connection

(2) Finger connection

(24) Bolt circle

(28) Through-bore

(72) Fit for centering sleeves

(73) Fit for centering pins

(80) Depth of the centering sleeve hole in the mating part

(90) MMS 22... sensor

(91) IN ... sensor

Hose-free direct connection M5

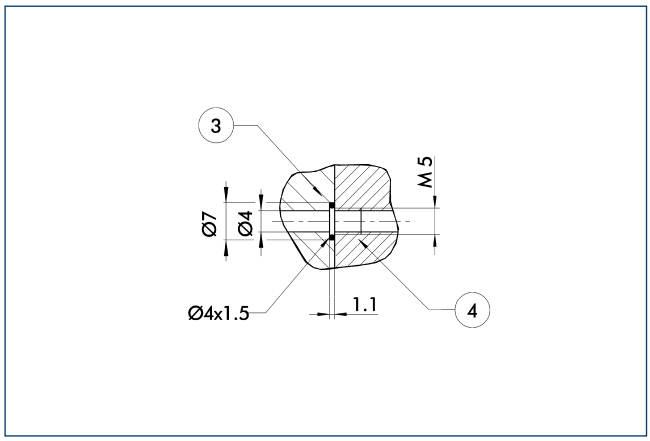

(3) Adapter (4) Gripper

The direct connection is used for supplying compressed air without hoses. Instead, the pressure medium is fed through bore-holes in the mounting plate.

Gripping force maintenance device AS / IS

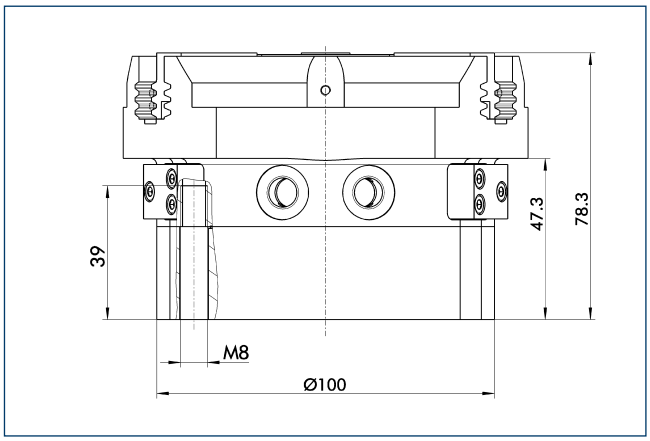

The mechanical maintenance of gripping force also assures a minimum gripping force in the case of a loss of pressure. With the AS / S variant, this acts as a closing force, and as an opening force for the IS variant. The maintenance of gripping force element can also be used as a means for increasing gripping force or for single actuated gripping.

Spring-loaded pressure piece

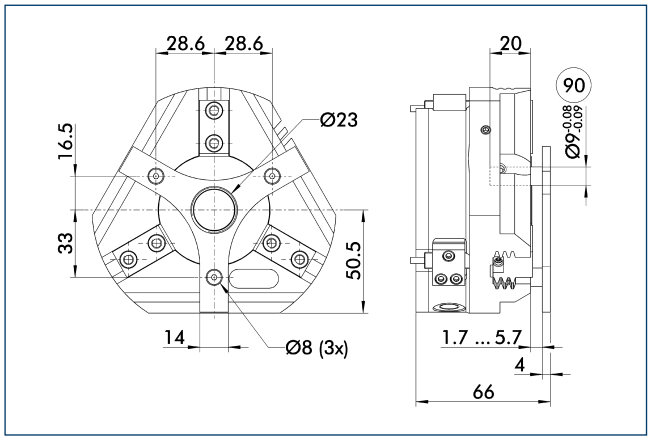

(90) Guide pin

For spring-supported positioning of the workpiece against a stop after the gripper has opened. Especially developed for loading machines.

Description	ID	Stroke [mm]	Min. force [N]
Spring-loaded pressure piece			
A-PZB-plus 100	0305176	4	18

SDV-P pressure maintenance valve

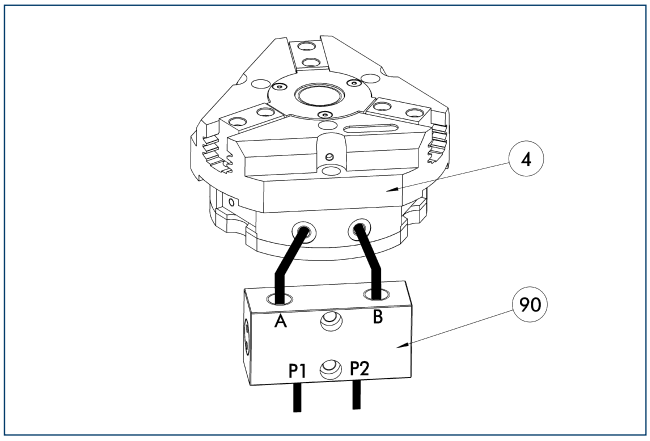

(4) Gripper (90) SDV-P pressure maintenance valve

The SDV-P pressure maintenance valves ensure that the pressure in the piston chamber of pneumatic gripping, rotary, linear, and quick-change modules is maintained temporarily during an emergency stop.

Description	ID	
Pressure maintenance valve		
SDV-P 04	0403130	

BSWS jaw quick-change systems

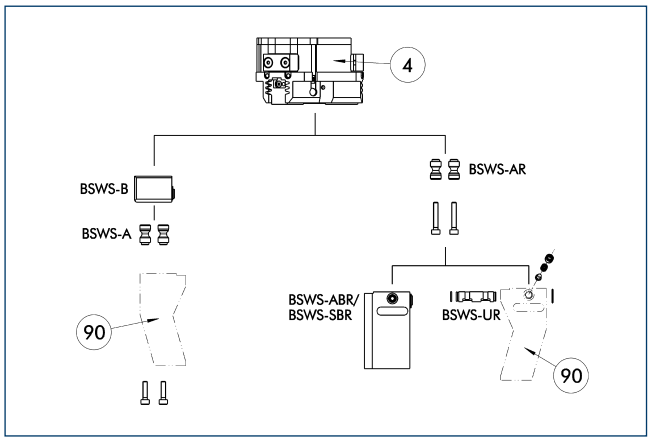

(4) Gripper
(90) Customized gripper fingers

There are various jaw quick-change systems available for the grippers. For detailed information, refer to the appropriate product.

Description	ID	
Jaw quick-change system adapter		
BSWS-AR 80	0300093	
BSWS-A 80	0303024	
Jaw quick-change system base		
BSWS-B 80	0303025	
Finger blanks with jaw quick-change system		
BSWS-ABR-PGZN-plus 80	0300073	
BSWS-SBR-PGZN-plus 80	0300083	
Jaw quick-change system reversed		
BSWS-UR 80	0302992	

ⓘ Only the systems listed in the table can be used.

ZBA L-plus 80 intermediate jaws

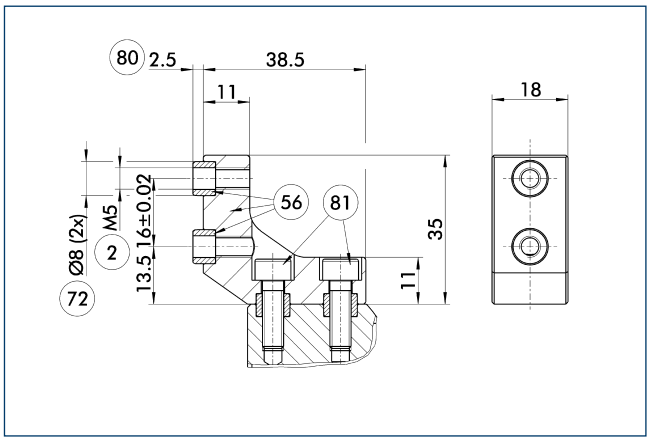

(2) Finger connection
(56) Included in delivery
(72) Fit for centering sleeves
(80) Depth of the centering sleeve hole in the mating part
(81) Not included in the scope of delivery

Optionally intermediate jaws can be used, enabling direct connection and alignment of top jaws and various standard accessories in Z-direction.

Description	ID	Material	Scope of delivery
Intermediate jaws			
ZBA-L-plus 80	0311732	Aluminum	1

UZB 80 universal intermediate jaw

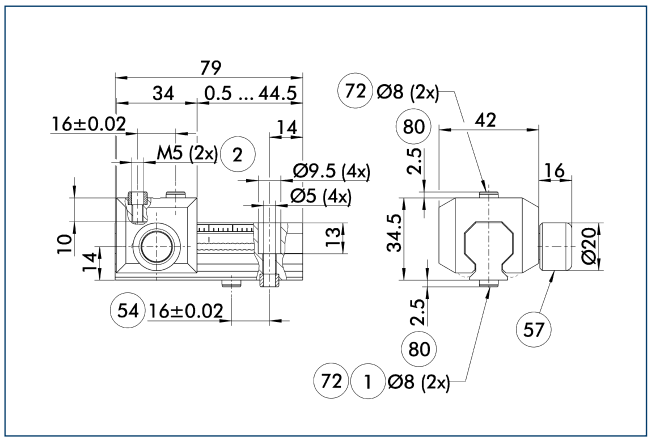

1 Gripper connection
2 Finger connection
54 Optional right or left connection
57 Locking
72 Fit for centering sleeves
80 Depth of the centering sleeve hole in the mating part

The universal intermediate jaw allows fast tool-free and reliable plugging and shifting of top jaws at the gripper.

Description	ID	Grid dimension [mm]
Universal intermediate jaw		
UZB 80	0300043	2
UZB-S 80	5518271	2
Finger blanks		
ABR-PGZN-plus 80	0300011	
SBR-PGZN-plus 80	0300021	

FMS-ZBA / ZBP 80 force-measuring jaws

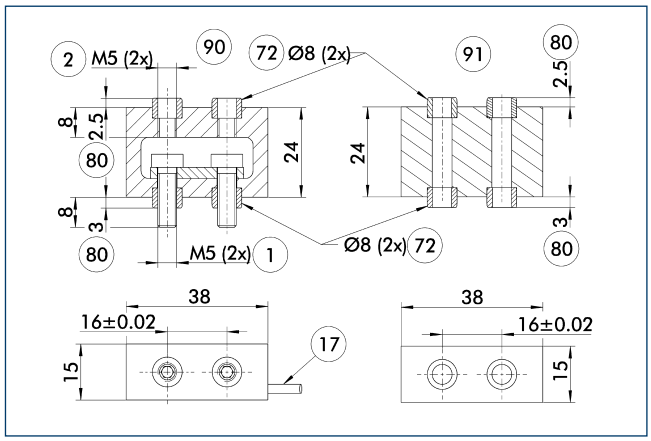

1 Gripper connection
2 Finger connection
17 Cable outlet
72 Fit for centering sleeves
80 Depth of the centering sleeve hole in the mating part
90 Active intermediate jaws
91 Passive intermediate jaws

Force measuring jaws measure gripping forces, but can also determine workpiece weights or dimensional deviations. There are active and passive intermediate jaws (FMS-ZBA or FMS-ZBP). At least one active force measuring jaw is required per gripper, the rest can be passive. For each active jaw, a FMS-A control unit and a FMS-AK connection cable are required.

Description	ID	Often combined
Active intermediate jaws		
FMS-ZBA 80	0301834	
Passive intermediate jaws		
FMS-ZBP 80	0301835	
Connection cables		
FMS-AK0200	0301820	●
FMS-AK0500	0301821	
FMS-AK1000	0301822	
FMS-AK2000	0301823	
Electronic processor		
FMS-A1	0301810	

ABR- / SBR-PGZN-plus 80 finger blanks

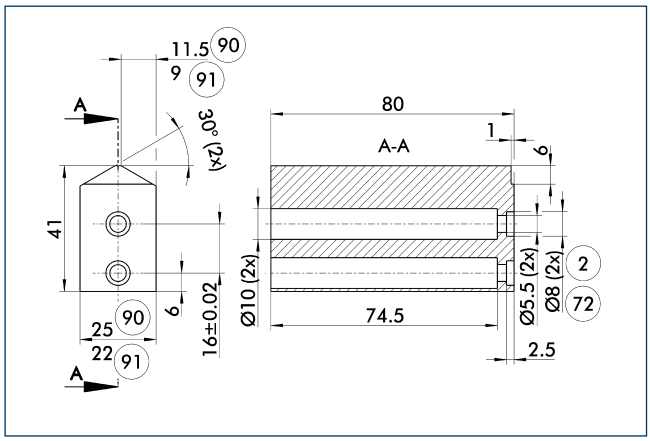

(2) Finger connection
(72) Fit for centering sleeves
(90) ABR-PGZN-plus
(91) SBR-PGZN-plus

Finger blanks for customized subsequent machining.

Description	ID	Material	Scope of delivery
Finger blanks			
ABR-PGZN-plus 80	0300011	Aluminum	1
SBR-PGZN-plus 80	0300021	16MnCr5	1

Inductive proximity switches

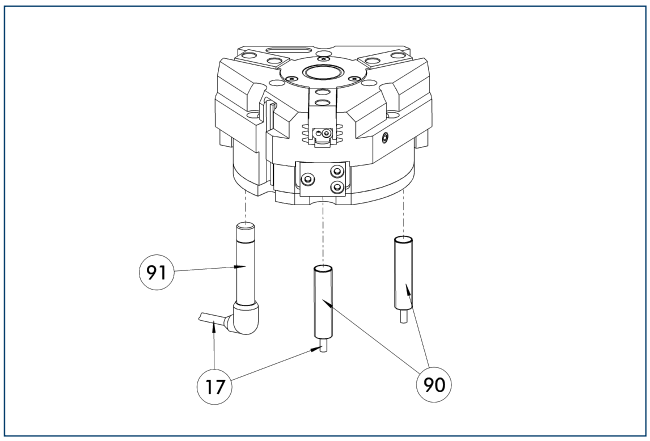

(17) Cable outlet
(90) IN ... sensor
(91) IN ...-SA sensor

Directly mounted limit position monitor.

Description	ID	Often combined
Inductive proximity switches		
IN 80-S-M12	0301578	
IN 80-S-M8	0301478	●
IN-C 80-S-M8	0301475	
INK 80-S	0301550	
Inductive proximity switches with lateral outlet		
IN 80-S-M12-SA	0301587	
IN 80-S-M8-SA	0301483	●
INK 80-S-SA	0301566	
Cable extensions		
KV BG12-SG12 3P-0030-PNP	0301999	
KV BG12-SG12 3P-0060-PNP	0301998	
KV BW08-SG08 3P-0030-PNP	0301495	
KV BW08-SG08 3P-0100-PNP	0301496	
KV BW08-SG08 3P-0200-PNP	0301497	●
KV BW12-SG12 3P-0030-PNP	0301595	
KV BW12-SG12 3P-0100-PNP	0301596	
KV BW12-SG12 3P-0200-PNP	0301597	
Clip for plug / socket		
CLI-M12	0301464	
CLI-M8	0301463	
Connection cables		
KA BG08-L 3P-0300-PNP	0301622	●
KA BG08-L 3P-0500-PNP	0301623	
KA BG12-L 3P-0500-PNP	30016369	
KA BW08-L 3P-0300-PNP	0301594	
KA BW08-L 3P-0500-PNP	0301502	
KA BW12-L 3P-0300-PNP	0301503	
KA BW12-L 3P-0500-PNP	0301507	
Sensor distributor		
V2-M8	0301775	●
V2-M12	0301776	●
V4-M12	0301747	

ⓘ Two sensors (closer/S) are required for each unit, plus extension cables as an option. Please note the minimum permitted bending radii for the sensor cables, which are generally 35 mm.

Flexible position sensor

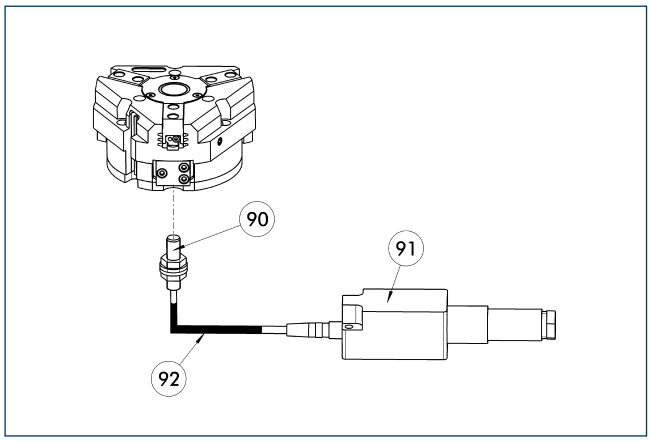

(90) FPS-S sensor
(91) FPS-F5 / -F5 T electronic processor
(92) Cable extensions

Flexible position monitoring of up to five positions.

Description	ID	Often combined
Mounting kit for FPS		
AS-FPS-PGZN-plus 64-1/80-2	0301630	
AS-FPS-PGZN-plus 80-1/PZB 80/PZB 100	0301632	
Electronic processor		
FPS-F5	0301805	●
FPS-F5 T	0301807	
Sensor		
FPS-S M8	0301704	
Clip for plug / socket		
CLI-M8	0301463	

ⓘ When using a FPS system, a FPS sensor (FPS-S) and a control unit (FPS-F5 / F5 T) are required for each gripper as well as a mounting kit (AS), if listed. Cable extensions (KV) are available as options in the "Accessories" catalog section.

MMS electronic magnetic switches

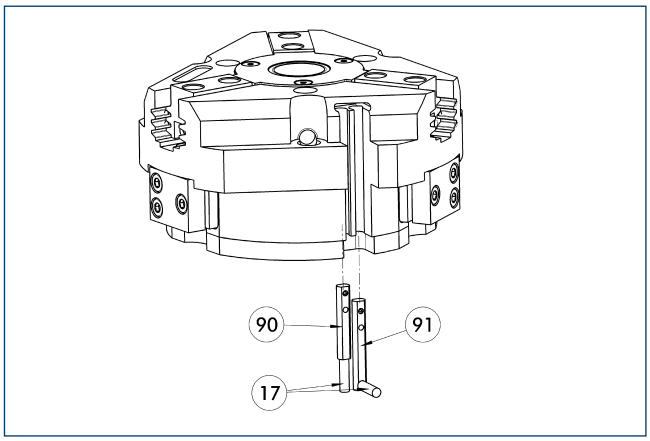

(17) Cable outlet
(90) MMS 22... sensor
(91) MMS 22...-SA sensor

End position monitoring for mounting in the C-slot.

Description	ID	Often combined
MMS electronic magnetic switches		
MMS 22-S-M8-PNP	0301032	●
MMSK 22-S-PNP	0301034	
MMS electronic magnetic switches with lateral cable outlet		
MMS 22-S-M8-PNP-SA	0301042	●
MMSK 22-S-PNP-SA	0301044	
Reed switches		
RMS 22-S-M8	0377720	●
Cable extensions		
KV BW08-SG08 3P-0030-PNP	0301495	
KV BW08-SG08 3P-0100-PNP	0301496	
KV BW08-SG08 3P-0200-PNP	0301497	●
Clip for plug / socket		
CLI-M8	0301463	
Connection cables		
KA BG08-L 3P-0300-PNP	0301622	●
KA BG08-L 3P-0500-PNP	0301623	
KA BW08-L 3P-0300-PNP	0301594	
KA BW08-L 3P-0500-PNP	0301502	
RSS radio sensor system		
RSS-T2	0377710	
Sensor distributor		
V2-M8	0301775	●
V4-M8	0301746	
V8-M8	0301751	

ⓘ Two sensors (closer/S) are required for each unit, plus extension cables as an option. Please note the minimum permitted bending radii for the sensor cables, which are generally 35 mm.

MMS PI1 programmable magnetic switches

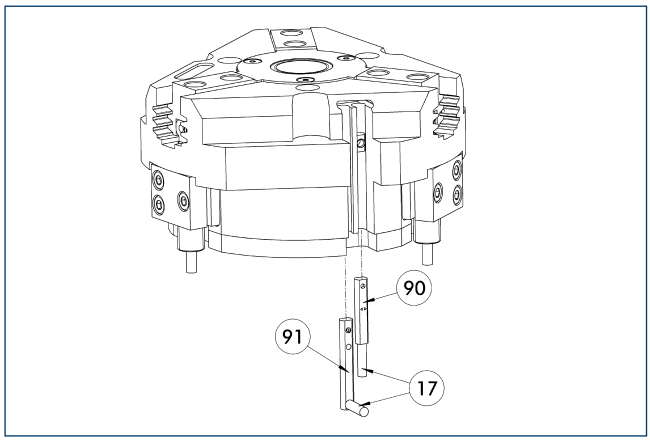

(17) Cable outlet
(91) MMS 22...-PI1-...-SA sensor
(90) MMS 22...-PI1-... sensor

Position query with one programmable position per sensor and electronics integrated in sensor. Programmable via MT magnet teaching tool (included in the scope of delivery) or ST plug teaching tool (optional). Limit position query mounted in C-groove. If the ST plug teaching tools are listed in the table, teaching can only take place with the ST plug teaching tools.

Description	ID	Often combined
Plug teaching tool		
ST-MMS 22-PI1-PNP	0301025	
MMS PI1 programmable magnetic switches		
MMS 22-PI1-S-M8-PNP	0301160	●
MMSK 22-PI1-S-PNP	0301162	
MMS PI1-HD programmable magnetic switches with stainless steel housing		
MMS 22-PI1-S-M8-PNP-HD	0301110	●
MMSK 22-PI1-S-PNP-HD	0301112	
MMS PI1 programmable magnetic switches with lateral cable outlet		
MMS 22-PI1-S-M8-PNP-SA	0301166	●
MMSK 22-PI1-S-PNP-SA	0301168	

ⓘ Two sensors (closer/S) are required for each unit, plus extension cables as an option. Please note the minimum permitted bending radii for the sensor cables, which are generally 35 mm. Connection cable, cable extensions, and sensor distributors can be found in the table for the MMS 22.

MMS PI2 programmable magnetic switches

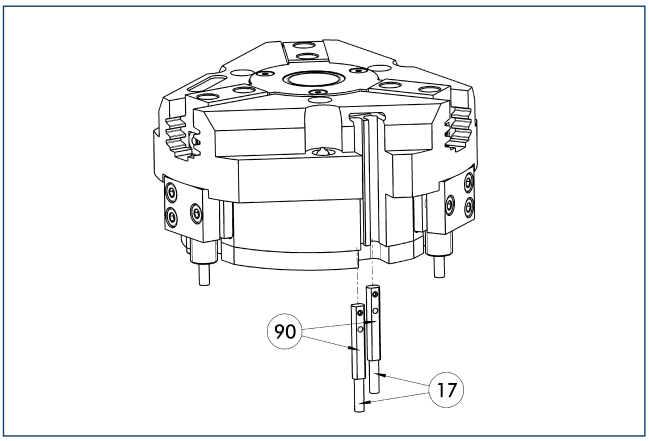

(17) Cable outlet
(90) MMS 22...-PI2-... sensor

Position query with two programmable positions per sensor and electronics integrated in sensor. Programmable via MT magnet teaching tool (included in the scope of delivery) or ST plug teaching tool (optional). Limit position query mounted in C-groove. If the ST plug teaching tools are listed in the table, teaching can only take place with the ST plug teaching tools.

Description	ID	Often combined
Plug teaching tool		
ST-MMS 22-PI2-PNP	0301026	
MMS PI2 programmable magnetic switches		
MMS 22-PI2-S-M8-PNP	0301180	●
MMSK 22-PI2-S-PNP	0301182	
MMS PI2-HD programmable magnetic switches with stainless steel housing		
MMS 22-PI2-S-M8-PNP-HD	0301130	●
MMSK 22-PI2-S-PNP-HD	0301132	

ⓘ Per unit one sensor (closer/S) is required, optionally a cable extension. Please note the minimum permitted bending radii for the sensor cables, which are generally 35 mm. Connection cable, cable extensions, and sensor distributors can be found in the table for the MMS-P 22.

MMS-P programmable magnetic switches

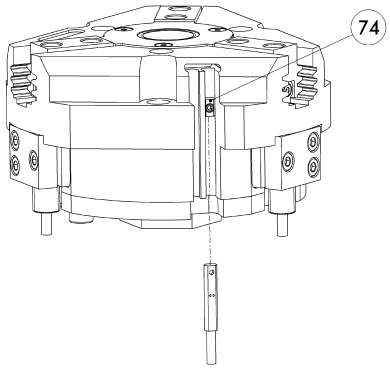

74 Stop for MMS-P

Position monitoring with two programmable positions per sensor. The end position monitoring is mounted in the C-slot.

Description	ID	Often combined
MMS-P programmable magnetic switches		
MMSK-P 22-S-PNP	0301371	
MMS-P 22-S-M8-PNP	0301370	●
Clip for plug / socket		
CLI-M8	0301463	
Connection cables		
KA BG08-L 4P-0500	0307767	●
KA BG08-L 4P-1000	0307768	
KA BW08-L 4P-0500	0307765	
KA BW08-L 4P-1000	0307766	
Sensor distributor		
V2-M8-4P-2XM8-3P	0301380	

ⓘ Per unit one sensor (closer/S) is required, optionally a cable extension. Please note the minimum permitted bending radii for the sensor cables, which are generally 35 mm.

APS-Z80 analog position sensor

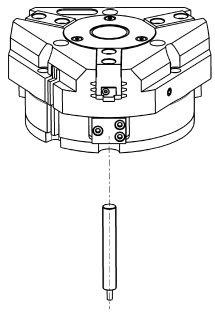

Contactlessly measuring, analog multi-position monitoring for any number of positions.

Description	ID	Often combined
Mounting kit for APS-Z80		
AS-APS-Z80-PGZN-plus 80-1	0302107	
AS-APS-Z80-PGZN-plus 80-2	0302108	
Sensor		
APS-Z80-K	0302072	
APS-Z80-M8	0302070	●

ⓘ When using an APS system, one mounting kit (AS-APS-Z80) and one APS-Z80 sensor is required per gripper.

APS-M1 analog position sensor

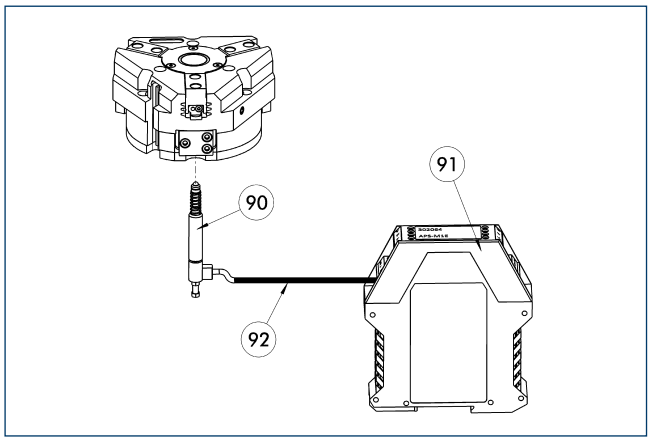

(90) APS-M1S sensor
(91) APS-M1E electronic processor
(92) APS-K extension cable

Analog multi position monitoring for any desired positions.

Description	ID	Often combined
Mounting kit for APS-M1		
AS-APS-M1-PGZN-plus 80-1	0302077	
AS-APS-M1-PGZN-plus 80-2	0302078	
Connection cables		
APS-K0200	0302066	●
APS-K0700	0302068	
Electronic processor		
APS-M1E	0302064	
Sensor		
APS-M1S	0302062	

ⓘ When using an APS system, for each gripper a mounting kit (AS-APS-M1), an APS-M1S sensor (incl. 3 m cable) as well as an electronics (APS-M1e) are required. An extension cable (APS-K) can be connected between the sensor and the electronics as an option. The max. cable length between the sensor and the electronics is 10 m, between the electronics and their control unit (PLC) it is max. 1 m.

Cylindrical reed switches

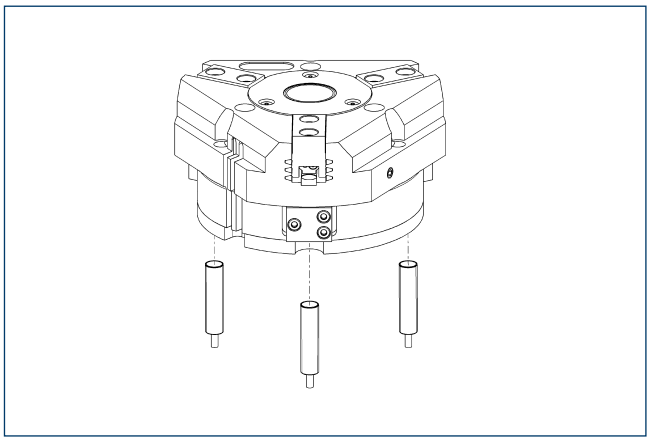

Limit position monitor can be mounted with mounting kit.

Description	ID	
Mounting kit for proximity switch		
AS-RMS 80 PGN/PZN-plus 64/80	0377725	
Reed switches		
RMS 80-S-M8	0377721	

ⓘ Two sensors (closer/S) are required for each unit, plus extension cables as an option. This mounting kit needs to be ordered optionally as an accessory. Two mounting kits are required per gripper. Please note the minimum permitted bending radii for the sensor cables, which are generally 35 mm.

PZB-plus 125

SCHUNK Grippers pneumatic | 3-Finger Centric Grippers | Universal Gripper

Gripping force, O.D. gripping

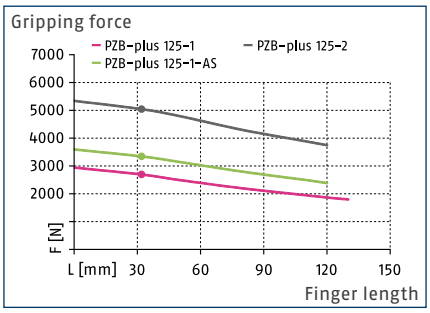

Gripping force, I.D. gripping

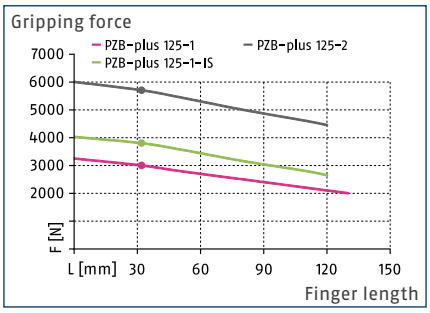

Finger load

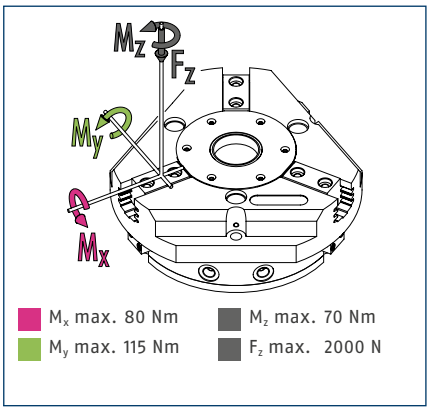

ⓘ The indicated moments and forces are static values, apply per base jaw and may occur simultaneously. M_y may arise in addition to the moment generated by the gripping force itself. If the max. permitted finger weight is exceeded, it is impreative to throttle the air supply so that the jaw movement occurs without any hitting or bouncing. Service life may be reduced.

Technical data

Description		PZB-plus 125-1	PZB-plus 125-2	PZB-plus 125-1-AS	PZB-plus 125-1-IS
ID		0305180	0305181	0305182	0305184
Stroke per jaw	[mm]	10	5	10	10
Closing- / opening force	[N]	2700/3000	5050/5700	3350/-	-/3750
min. spring force	[N]			650	750
Weight	[kg]	2.5	2.5	4	4
Recommended workpiece weight	[kg]	13	25	13	13
Fluid consumption per double stroke	[cm³]	65	65	300	300
min. / max. operating pressure	[bar]	2/8	2/8	4/6.5	4/6.5
Nominal operating pressure	[bar]	6	6	6	6
Closing- / opening time	[s]	0.2/0.2	0.2/0.2	0.17/0.35	0.35/0.17
Closing- / opening time only with spring	[s]			0.40	0.40
max. permitted finger length	[mm]	130	120	120	120
max. permitted weight per finger	[kg]	1.1	1.1	1.1	1.1
IP class		40	40	40	40
min. / max. ambient temperature	[°C]	5/90	5/90	5/90	5/90
Repeat accuracy	[mm]	0.01	0.01	0.01	0.01
Diameter of center bore	[mm]	25	25	25	25

Main view

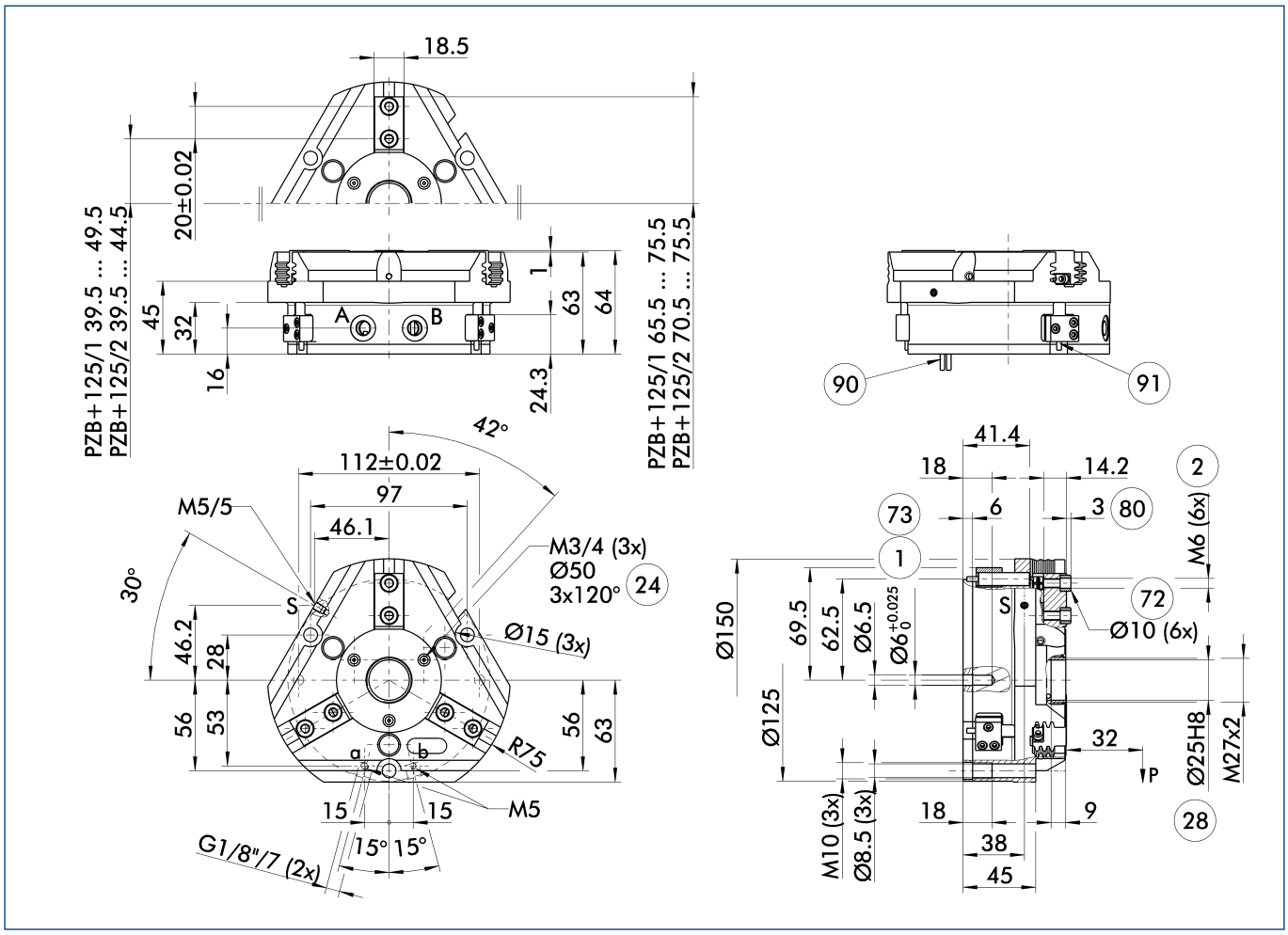

The drawing shows the gripper in the basic version with closed jaws, without dimensional consideration of the options described below.

ⓘ The SDV-P pressure maintenance valve can also be used for I.D. or O.D. gripping alternatively or in addition to the spring-loaded, mechanical gripping force maintenance device (see catalog section on "Accessories").

A, a Main / direct connection, gripper opening

B, b Main / direct connection, gripper closing

S Air purge connection (0.5 ... 1 bar)

(1) Gripper connection

(2) Finger connection

(24) Bolt circle

(28) Through-bore

(72) Fit for centering sleeves

(73) Fit for centering pins

(80) Depth of the centering sleeve hole in the mating part

(90) MMS 22... sensor

(91) IN ... sensor

Hose-free direct connection M5

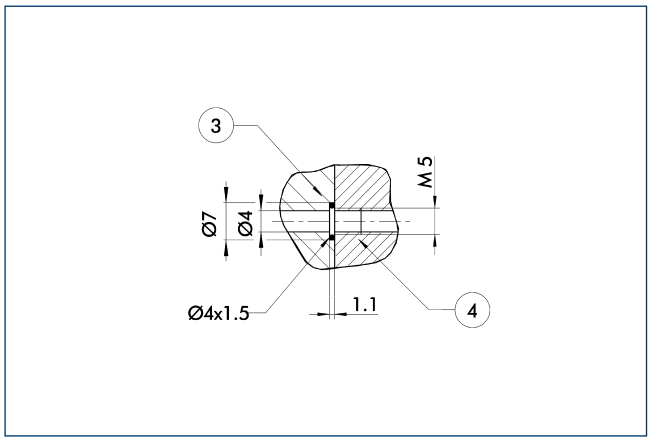

3 Adapter

4 Gripper

The direct connection is used for supplying compressed air without hoses. Instead, the pressure medium is fed through bore-holes in the mounting plate.

Gripping force maintenance device AS / IS

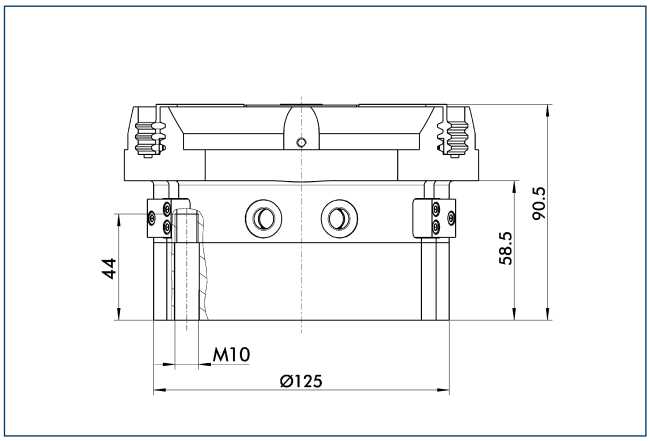

The mechanical maintenance of gripping force also assures a minimum gripping force in the case of a loss of pressure. With the AS / S variant, this acts as a closing force, and as an opening force for the IS variant. The maintenance of gripping force element can also be used as a means for increasing gripping force or for single actuated gripping.

Spring-loaded pressure piece

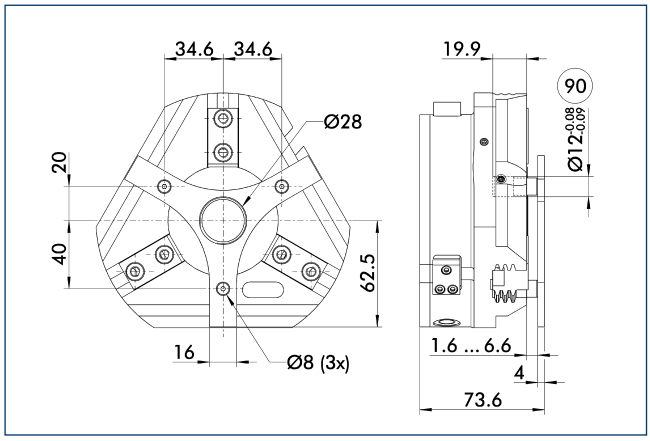

90 Guide pin

For spring-supported positioning of the workpiece against a stop after the gripper has opened. Especially developed for loading machines.

Description	ID	Stroke [mm]	Min. force [N]
Spring-loaded pressure piece			
A-PZB-plus 125	0305186	5	35

SDV-P pressure maintenance valve

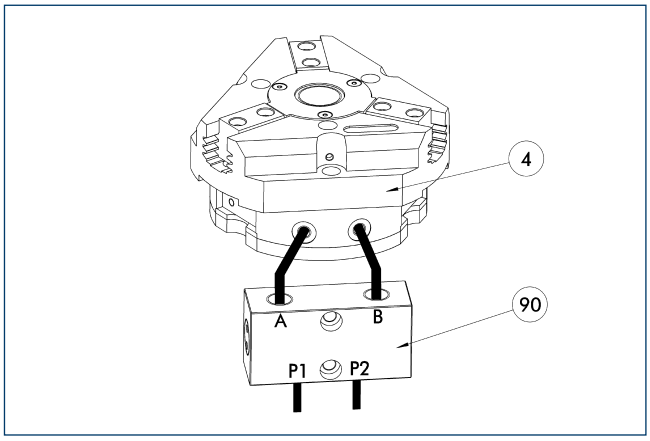

4 Gripper

90 SDV-P pressure maintenance valve

The SDV-P pressure maintenance valves ensure that the pressure in the piston chamber of pneumatic gripping, rotary, linear, and quick-change modules is maintained temporarily during an emergency stop.

Description	ID	
Pressure maintenance valve		
SDV-P 04	0403130	

BSWS jaw quick-change systems

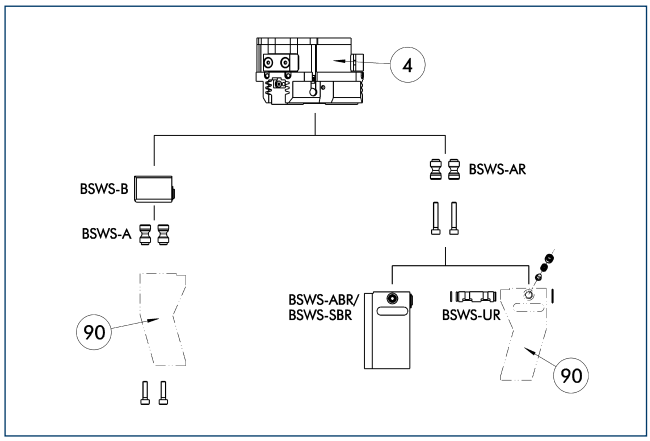

(4) Gripper
(90) Customized gripper fingers

There are various jaw quick-change systems available for the grippers. For detailed information, refer to the appropriate product.

Description	ID	
Jaw quick-change system adapter		
BSWS-AR 100	0300094	
BSWS-A 100	0303026	
Jaw quick-change system base		
BSWS-B 100	0303027	
Finger blanks with jaw quick-change system		
BSWS-ABR-PGZN-plus 100	0300074	
BSWS-SBR-PGZN-plus 100	0300084	
Jaw quick-change system reversed		
BSWS-UR 100	0302993	

ⓘ Only the systems listed in the table can be used.

ZBA L-plus 100 intermediate jaws

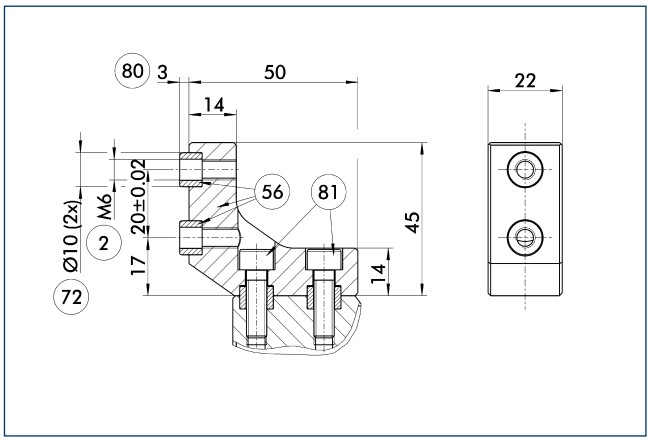

(2) Finger connection
(56) Included in delivery
(72) Fit for centering sleeves
(80) Depth of the centering sleeve hole in the mating part
(81) Not included in the scope of delivery

Optionally intermediate jaws can be used, enabling direct connection and alignment of top jaws and various standard accessories in Z-direction.

Description	ID	Material	Scope of delivery
Intermediate jaws			
ZBA-L-plus 100	0311742	Aluminum	1

UZB 100 universal intermediate jaw

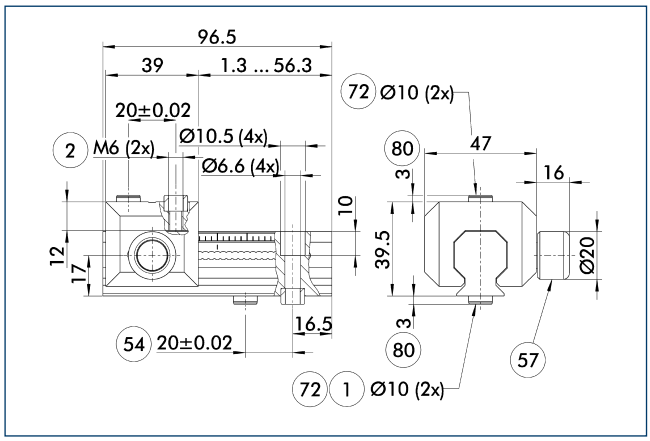

1. Gripper connection
2. Finger connection
54. Optional right or left connection
57. Locking
72. Fit for centering sleeves
80. Depth of the centering sleeve hole in the mating part

The universal intermediate jaw allows fast tool-free and reliable plugging and shifting of top jaws at the gripper.

Description	ID	Grid dimension [mm]
Universal intermediate jaw		
UZB 100	0300044	2.5
UZB-S 100	5518272	2.5
Finger blanks		
ABR-PGZN-plus 100	0300012	
SBR-PGZN-plus 100	0300022	

FMS-ZBA / ZBP 100 force-measuring jaws

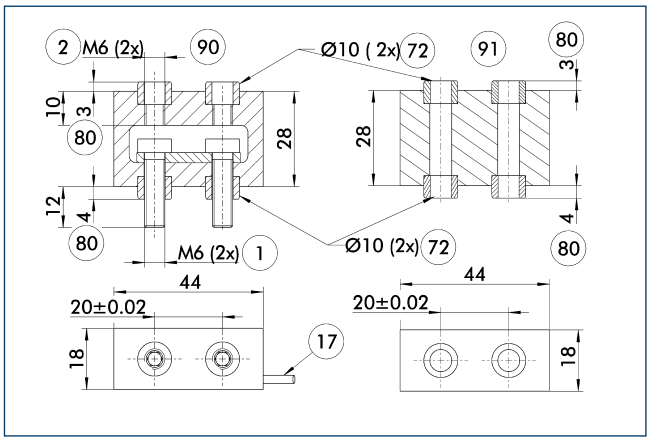

1. Gripper connection
2. Finger connection
17. Cable outlet
72. Fit for centering sleeves
80. Depth of the centering sleeve hole in the mating part
90. Active intermediate jaws
91. Passive intermediate jaws

Force measuring jaws measure gripping forces, but can also determine workpiece weights or dimensional deviations. There are active and passive intermediate jaws (FMS-ZBA or FMS-ZBP). At least one active force measuring jaw is required per gripper, the rest can be passive. For each active jaw, a FMS-A control unit and a FMS-AK connection cable are required.

Description	ID	Often combined
Active intermediate jaws		
FMS-ZBA 100	0301836	
Passive intermediate jaws		
FMS-ZBP 100	0301837	
Connection cables		
FMS-AK0200	0301820	●
FMS-AK0500	0301821	
FMS-AK1000	0301822	
FMS-AK2000	0301823	
Electronic processor		
FMS-A1	0301810	

ABR- / SBR-PGZN-plus 100 finger blanks

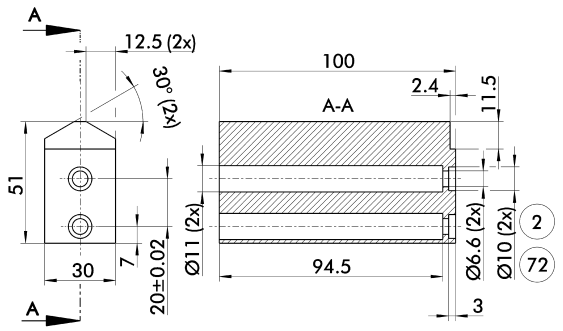

(2) Finger connection (72) Fit for centering sleeves

Finger blanks for customized subsequent machining.

Description	ID	Material	Scope of delivery
Finger blanks			
ABR-PGZN-plus 100	0300012	Aluminum	1
SBR-PGZN-plus 100	0300022	16MnCr5	1

Inductive proximity switches

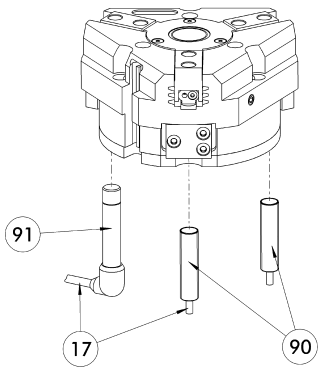

(17) Cable outlet (91) IN ...-SA sensor
(90) IN ... sensor

Directly mounted limit position monitor.

Description	ID	Often combined
Inductive proximity switches		
IN 80-S-M12	0301578	
IN 80-S-M8	0301478	●
INK 80-S	0301550	
Inductive proximity switches with lateral outlet		
IN 80-S-M12-SA	0301587	
IN 80-S-M8-SA	0301483	●
INK 80-S-SA	0301566	
Cable extensions		
KV BG12-SG12 3P-0030-PNP	0301999	
KV BG12-SG12 3P-0060-PNP	0301998	
KV BW08-SG08 3P-0030-PNP	0301495	
KV BW08-SG08 3P-0100-PNP	0301496	
KV BW08-SG08 3P-0200-PNP	0301497	●
KV BW12-SG12 3P-0030-PNP	0301595	
KV BW12-SG12 3P-0100-PNP	0301596	
KV BW12-SG12 3P-0200-PNP	0301597	
Clip for plug / socket		
CLI-M12	0301464	
CLI-M8	0301463	
Connection cables		
KA BG08-L 3P-0300-PNP	0301622	●
KA BG08-L 3P-0500-PNP	0301623	
KA BG12-L 3P-0500-PNP	30016369	
KA BW08-L 3P-0300-PNP	0301594	
KA BW08-L 3P-0500-PNP	0301502	
KA BW12-L 3P-0300-PNP	0301503	
KA BW12-L 3P-0500-PNP	0301507	
Sensor distributor		
V2-M8	0301775	●
V2-M12	0301776	●
V4-M12	0301747	
V4-M8	0301746	

ⓘ Two sensors (closer/S) are required for each unit, plus extension cables as an option. Please note the minimum permitted bending radii for the sensor cables, which are generally 35 mm.

Flexible position sensor

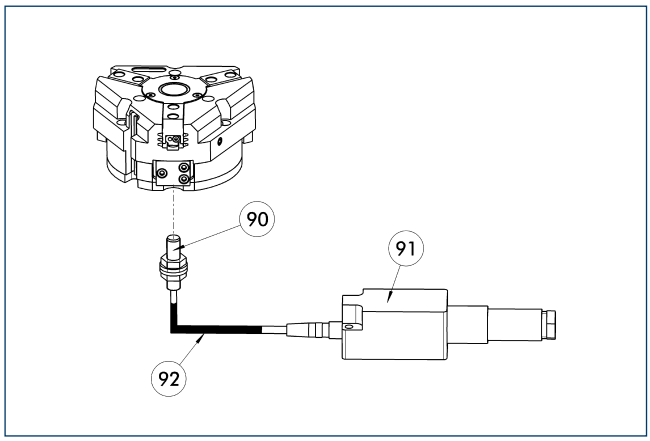

(90) FPS-S sensor
(91) FPS-F5 / -F5 T electronic processor
(92) Cable extensions

Flexible position monitoring of up to five positions.

Description	ID	Often combined
Mounting kit for FPS		
AS-FPS-PGZN-plus 100-1	0301634	
AS-FPS-PGZN-plus 100-2/PZB 125	0301635	
Electronic processor		
FPS-F5	0301805	●
FPS-F5 T	0301807	
Sensor		
FPS-S M8	0301704	
Clip for plug / socket		
CLI-M8	0301463	

ⓘ When using a FPS system, a FPS sensor (FPS-S) and a control unit (FPS-F5 / F5 T) are required for each gripper as well as a mounting kit (AS), if listed. Cable extensions (KV) are available as options in the "Accessories" catalog section.

MMS electronic magnetic switches

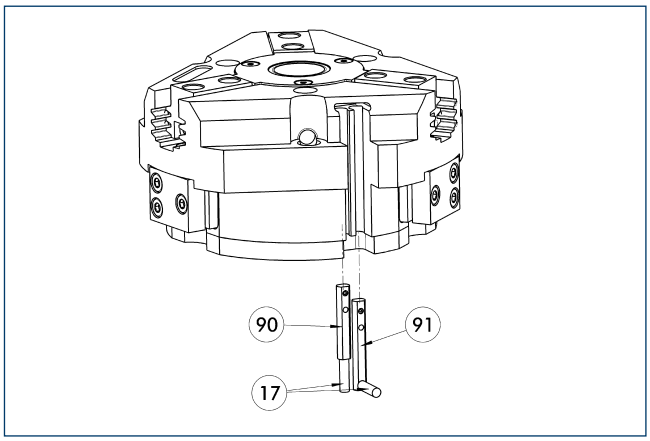

(17) Cable outlet
(90) MMS 22... sensor
(91) MMS 22...-SA sensor

End position monitoring for mounting in the C-slot.

Description	ID	Often combined
MMS electronic magnetic switches		
MMS 22-S-M8-PNP	0301032	●
MMSK 22-S-PNP	0301034	
MMS electronic magnetic switches with lateral cable outlet		
MMS 22-S-M8-PNP-SA	0301042	●
MMSK 22-S-PNP-SA	0301044	
Reed switches		
RMS 22-S-M8	0377720	●
Cable extensions		
KV BW08-SG08 3P-0030-PNP	0301495	
KV BW08-SG08 3P-0100-PNP	0301496	
KV BW08-SG08 3P-0200-PNP	0301497	●
Clip for plug / socket		
CLI-M8	0301463	
Connection cables		
KA BG08-L 3P-0300-PNP	0301622	●
KA BG08-L 3P-0500-PNP	0301623	
KA BW08-L 3P-0300-PNP	0301594	
KA BW08-L 3P-0500-PNP	0301502	
RSS radio sensor system		
RSS-T2	0377710	
Sensor distributor		
V2-M8	0301775	●
V4-M8	0301746	
V8-M8	0301751	

ⓘ Two sensors (closer/S) are required for each unit, plus extension cables as an option. Please note the minimum permitted bending radii for the sensor cables, which are generally 35 mm.

MMS PI1 programmable magnetic switches

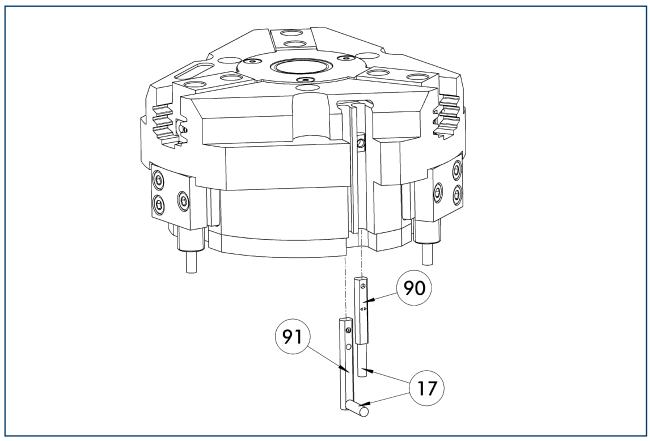

17 Cable outlet
91 MMS 22...-PI1-...-SA sensor
90 MMS 22...-PI1-... sensor

Position query with one programmable position per sensor and electronics integrated in sensor. Programmable via MT magnet teaching tool (included in the scope of delivery) or ST plug teaching tool (optional). Limit position query mounted in C-groove. If the ST plug teaching tools are listed in the table, teaching can only take place with the ST plug teaching tools.

Description	ID	Often combined
MMS PI1 programmable magnetic switches		
MMS 22-PI1-S-M8-PNP	0301160	●
MMSK 22-PI1-S-PNP	0301162	
MMS PI1-HD programmable magnetic switches with stainless steel housing		
MMS 22-PI1-S-M8-PNP-HD	0301110	●
MMSK 22-PI1-S-PNP-HD	0301112	
MMS PI1 programmable magnetic switches with lateral cable outlet		
MMS 22-PI1-S-M8-PNP-SA	0301166	●
MMSK 22-PI1-S-PNP-SA	0301168	

ⓘ Two sensors (closer/S) are required for each unit, plus extension cables as an option. Please note the minimum permitted bending radii for the sensor cables, which are generally 35 mm. Connection cable, cable extensions, and sensor distributors can be found in the table for the MMS 22.

MMS PI2 programmable magnetic switches

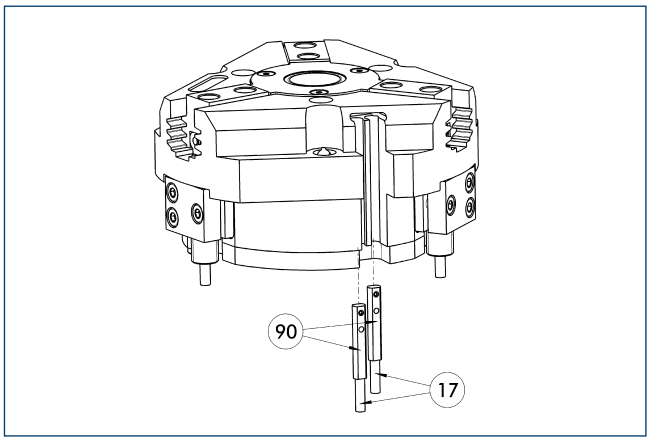

17 Cable outlet
90 MMS 22...-PI2-... sensor

Position query with two programmable positions per sensor and electronics integrated in sensor. Programmable via MT magnet teaching tool (included in the scope of delivery) or ST plug teaching tool (optional). Limit position query mounted in C-groove. If the ST plug teaching tools are listed in the table, teaching can only take place with the ST plug teaching tools.

Description	ID	Often combined
MMS PI2 programmable magnetic switches		
MMS 22-PI2-S-M8-PNP	0301180	●
MMSK 22-PI2-S-PNP	0301182	
MMS PI2-HD programmable magnetic switches with stainless steel housing		
MMS 22-PI2-S-M8-PNP-HD	0301130	●
MMSK 22-PI2-S-PNP-HD	0301132	

ⓘ Per unit one sensor (closer/S) is required, optionally a cable extension. Please note the minimum permitted bending radii for the sensor cables, which are generally 35 mm. Connection cable, cable extensions, and sensor distributors can be found in the table for the MMS-P 22.

MMS-P programmable magnetic switches

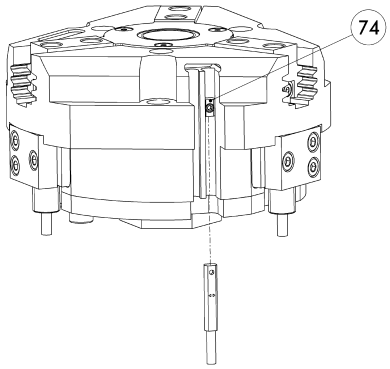

74 Stop for MMS-P

Position monitoring with two programmable positions per sensor. The end position monitoring is mounted in the C-slot.

Description	ID	Often combined
MMS-P programmable magnetic switches		
MMSK-P 22-S-PNP	0301371	
MMS-P 22-S-M8-PNP	0301370	●
Clip for plug / socket		
CLI-M8	0301463	
Connection cables		
KA BG08-L 4P-0500	0307767	●
KA BG08-L 4P-1000	0307768	
KA BW08-L 4P-0500	0307765	
KA BW08-L 4P-1000	0307766	
Sensor distributor		
V2-M8-4P-2XM8-3P	0301380	

ⓘ Per unit one sensor (closer/S) is required, optionally a cable extension. Please note the minimum permitted bending radii for the sensor cables, which are generally 35 mm.

APS-Z80 analog position sensor

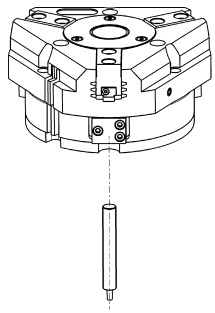

Contactlessly measuring, analog multi-position monitoring for any number of positions.

Description	ID	Often combined
Mounting kit for APS-Z80		
AS-APS-Z80-PGZN-plus 100-1	0302109	
AS-APS-Z80-PGZN-plus 100-2	0302110	
Sensor		
APS-Z80-K	0302072	
APS-Z80-M8	0302070	●

ⓘ When using an APS system, one mounting kit (AS-APS-Z80) and one APS-Z80 sensor is required per gripper.

APS-M1 analog position sensor

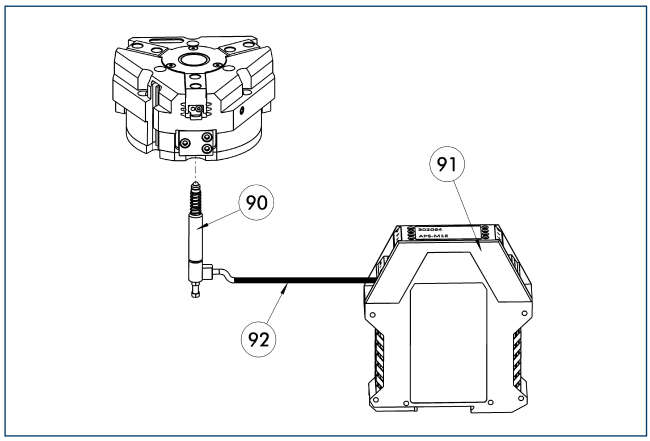

(90) APS-M1S sensor
(91) APS-M1E electronic processor
(92) APS-K extension cable

Analog multi position monitoring for any desired positions.

Description	ID	Often combined
Mounting kit for APS-M1		
AS-APS-M1-PGZN-plus 100-1	0302079	
AS-APS-M1-PGZN-plus 100-2	0302080	
Connection cables		
APS-K0200	0302066	●
APS-K0700	0302068	
Electronic processor		
APS-M1E	0302064	
Sensor		
APS-M1S	0302062	

ⓘ When using an APS system, for each gripper a mounting kit (AS-APS-M1), an APS-M1S sensor (incl. 3 m cable) as well as an electronics (APS-M1e) are required. An extension cable (APS-K) can be connected between the sensor and the electronics as an option. The max. cable length between the sensor and the electronics is 10 m, between the electronics and their control unit (PLC) it is max. 1 m.

Cylindrical reed switches

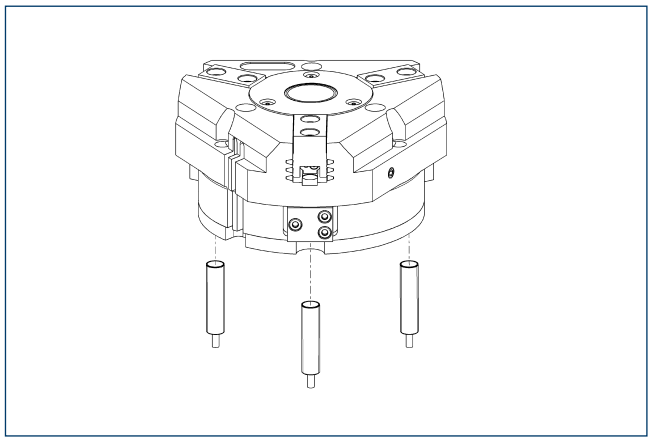

Limit position monitor can be mounted with mounting kit.

Description	ID	
Mounting kit for proximity switch		
AS-RMS 80 PGN/PZN-plus 100/125	0377726	
Reed switches		
RMS 80-S-M8	0377721	

ⓘ Two sensors (closer/S) are required for each unit, plus extension cables as an option. This mounting kit needs to be ordered optionally as an accessory. Two mounting kits are required per gripper. Please note the minimum permitted bending radii for the sensor cables, which are generally 35 mm.

PZB-plus 160

SCHUNK Grippers pneumatic | 3-Finger Centric Grippers | Universal Gripper

Gripping force, O.D. gripping

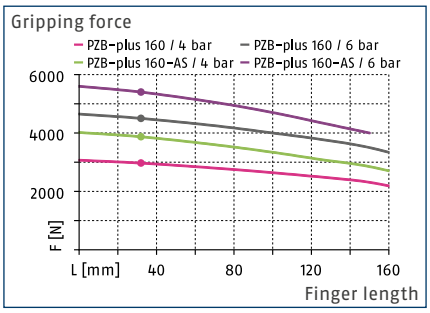

Gripping force, I.D. gripping

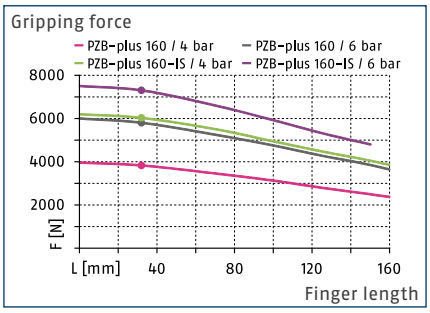

Finger load

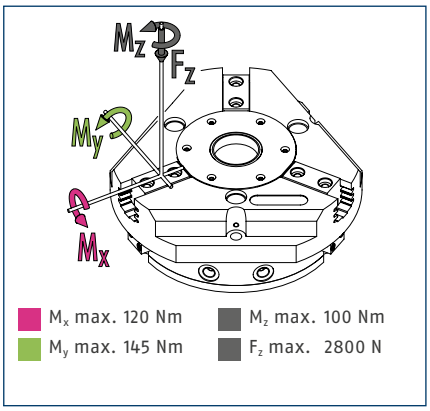

ⓘ The indicated moments and forces are static values, apply per base jaw and may occur simultaneously. M_y may arise in addition to the moment generated by the gripping force itself. If the max. permitted finger weight is exceeded, it is impreative to throttle the air supply so that the jaw movement occurs without any hitting or bouncing. Service life may be reduced.

Technical data

Description		PZB-plus 160-1	PZB-plus 160-1-AS	PZB-plus 160-1-IS
ID		0305190	0305192	0305194
Stroke per jaw	[mm]	13	13	13
Closing- / opening force	[N]	4500/5800	5400/-	-/7300
min. spring force	[N]		900	1500
Weight	[kg]	4.8	7.3	7.3
Recommended workpiece weight	[kg]	22	22	22
Fluid consumption per double stroke	[cm³]	360	620	620
min. / max. operating pressure	[bar]	2/8	4/6.5	4/6.5
Nominal operating pressure	[bar]	6	6	6
Closing- / opening time	[s]	0.5/0.5	0.4/0.8	0.8/0.4
Closing- / opening time only with spring	[s]		0.80	0.80
max. permitted finger length	[mm]	160	135	135
max. permitted weight per finger	[kg]	2.1	2.1	2.1
IP class		40	40	40
min. / max. ambient temperature	[°C]	5/90	5/90	5/90
Repeat accuracy	[mm]	0.02	0.02	0.02
Diameter of center bore	[mm]	34	34	34

Main view

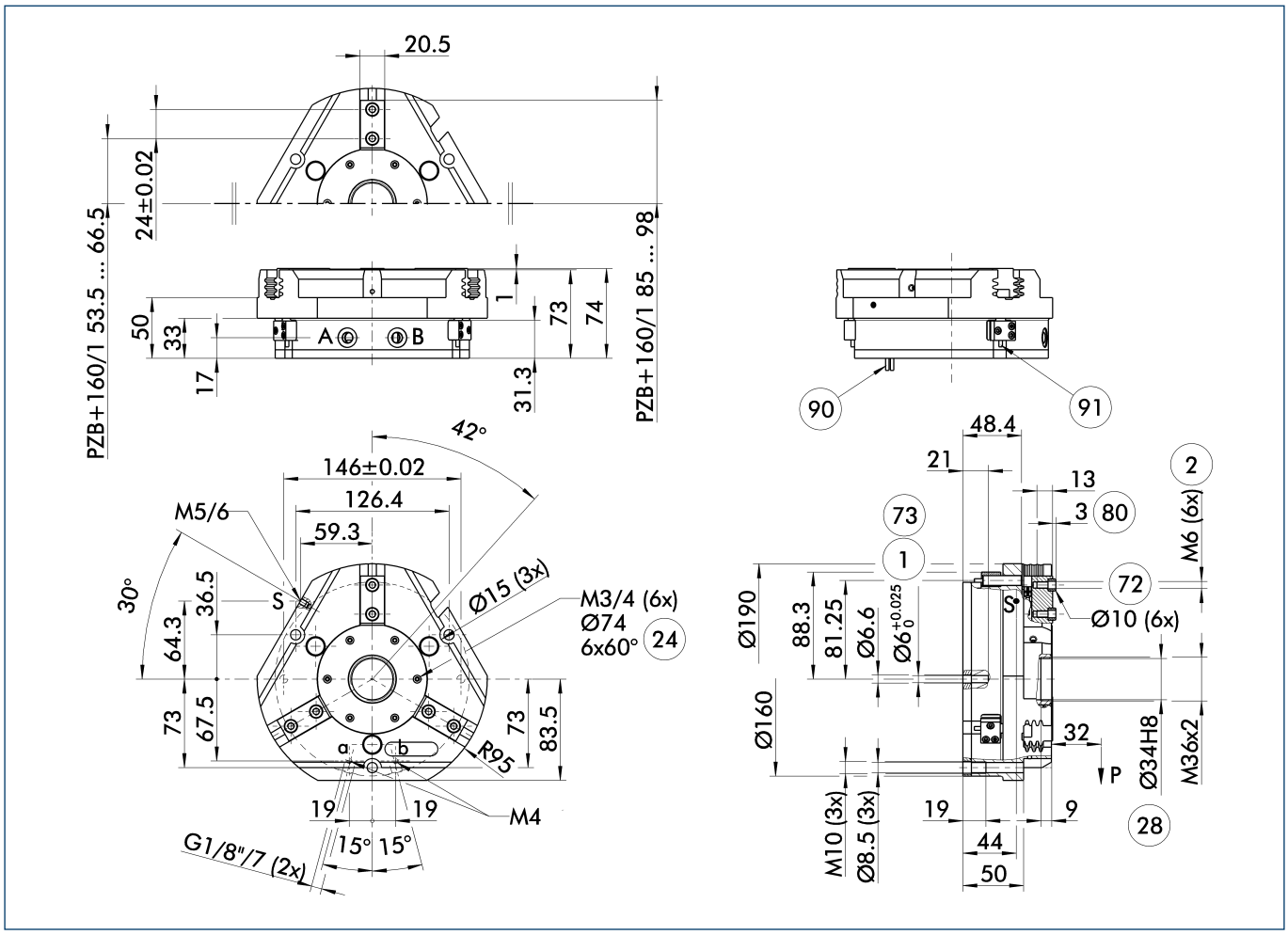

The drawing shows the gripper in the basic version with closed jaws, without dimensional consideration of the options described below.

ⓘ The SDV-P pressure maintenance valve can also be used for I.D. or O.D. gripping alternatively or in addition to the spring-loaded, mechanical gripping force maintenance device (see catalog section on "Accessories").

A, a Main / direct connection, gripper opening

B, b Main / direct connection, gripper closing

S Air purge connection (0.5 ... 1 bar)

(1) Gripper connection

(2) Finger connection

(24) Bolt circle

(28) Through-bore

(72) Fit for centering sleeves

(73) Fit for centering pins

(80) Depth of the centering sleeve hole in the mating part

(90) MMS 22... sensor

(91) IN ... sensor

Hose-free direct connection M4

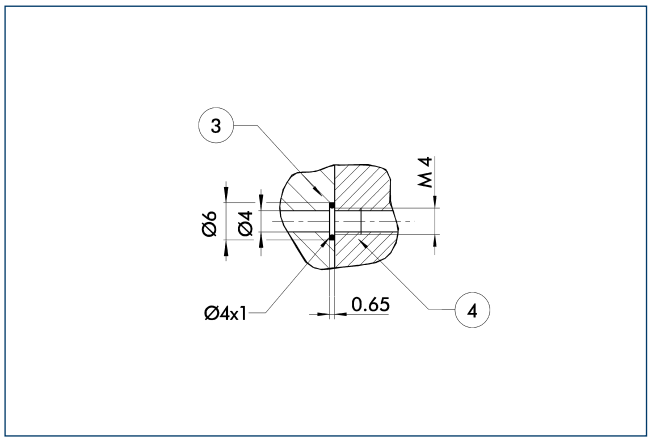

3 Adapter

4 Gripper

The direct connection is used for supplying compressed air without hoses. Instead, the pressure medium is fed through bore-holes in the mounting plate.

Gripping force maintenance device AS / IS

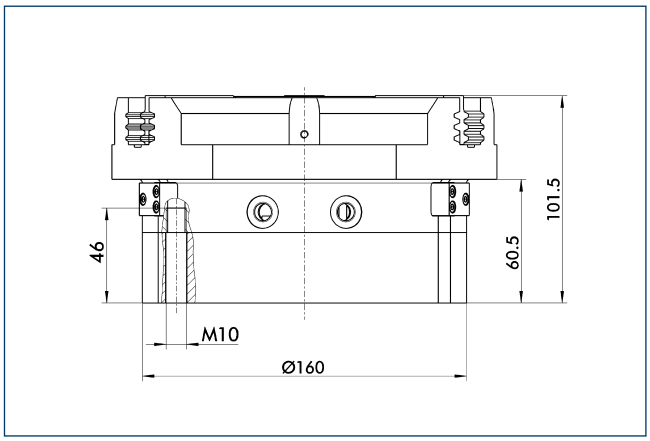

The mechanical maintenance of gripping force also assures a minimum gripping force in the case of a loss of pressure. With the AS / S variant, this acts as a closing force, and as an opening force for the IS variant. The maintenance of gripping force element can also be used as a means for increasing gripping force or for single actuated gripping.

Spring-loaded pressure piece

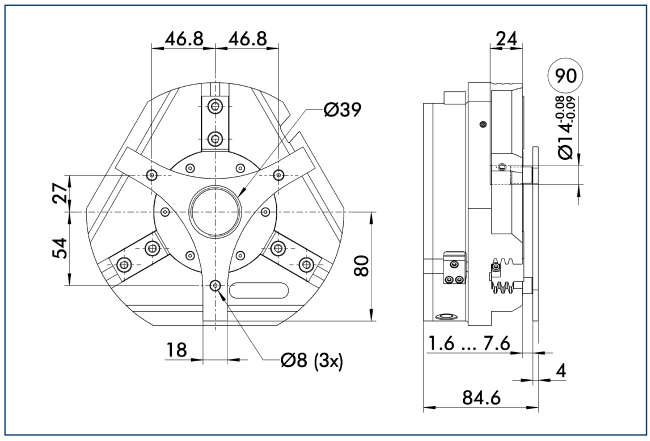

90 Guide pin

For spring-supported positioning of the workpiece against a stop after the gripper has opened. Especially developed for loading machines.

Description	ID	Stroke [mm]	Min. force [N]
Spring-loaded pressure piece			
A-PZB-plus 160	0305196	6	105

SDV-P pressure maintenance valve

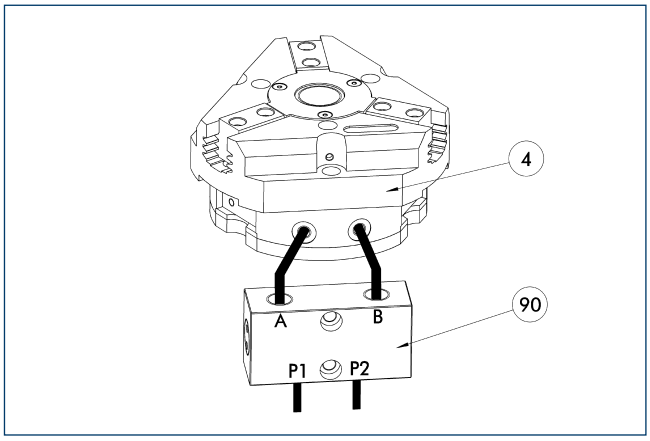

4 Gripper

90 SDV-P pressure maintenance valve

The SDV-P pressure maintenance valves ensure that the pressure in the piston chamber of pneumatic gripping, rotary, linear, and quick-change modules is maintained temporarily during an emergency stop.

Description	ID	
Pressure maintenance valve		
SDV-P 04	0403130	

BSWS jaw quick-change systems

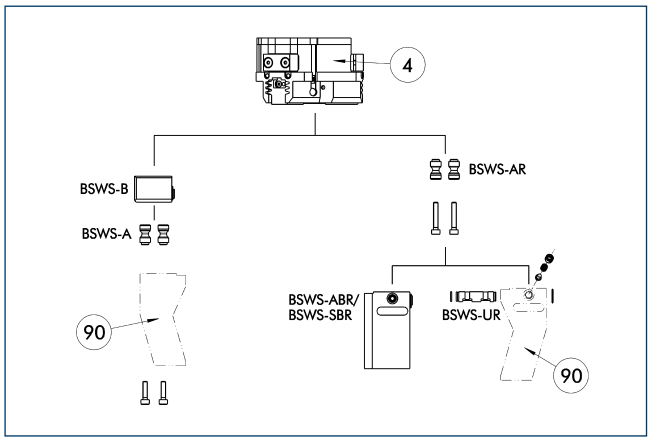

(4) Gripper
(90) Customized gripper fingers

There are various jaw quick-change systems available for the grippers. For detailed information, refer to the appropriate product.

Description	ID	
Jaw quick-change system adapter		
BSWS-AR 125	0300095	
BSWS-A 125	0303028	
Jaw quick-change system base		
BSWS-B 125	0303029	
Finger blanks with jaw quick-change system		
BSWS-ABR-PGZN-plus 125	0300075	
BSWS-SBR-PGZN-plus 125	0300085	
Jaw quick-change system reversed		
BSWS-UR 125	0302994	

ⓘ Only the systems listed in the table can be used.

ZBA L-plus 125 intermediate jaws

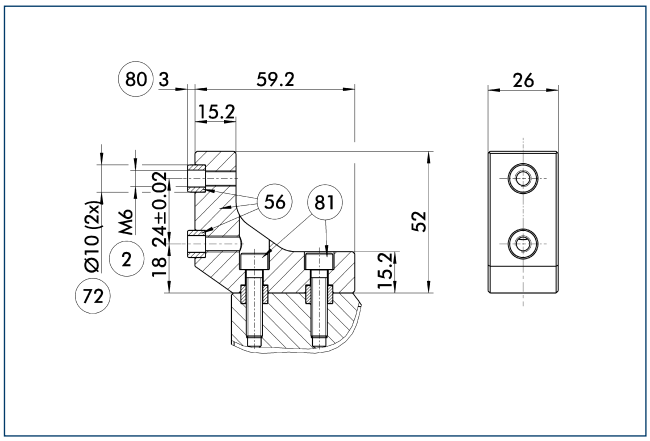

(2) Finger connection
(56) Included in delivery
(72) Fit for centering sleeves
(80) Depth of the centering sleeve hole in the mating part
(81) Not included in the scope of delivery

Optionally intermediate jaws can be used, enabling direct connection and alignment of top jaws and various standard accessories in Z-direction.

Description	ID	Material	Scope of delivery
Intermediate jaws			
ZBA-L-plus 125	0311752	Aluminum	1

UZB 125 universal intermediate jaw

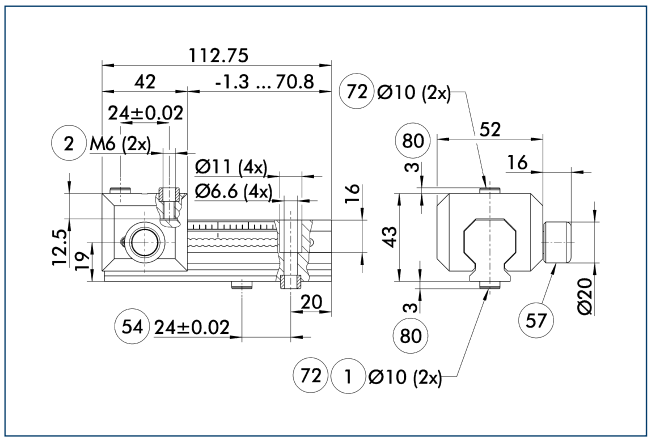

1 Gripper connection
2 Finger connection
54 Optional right or left connection
57 Locking
72 Fit for centering sleeves
80 Depth of the centering sleeve hole in the mating part

The universal intermediate jaw allows fast tool-free and reliable plugging and shifting of top jaws at the gripper.

Description	ID	Grid dimension [mm]
Universal intermediate jaw		
UZB 125	0300045	3
UZB-S 125	5518273	3
Finger blanks		
ABR-PGZN-plus 125	0300013	
SBR-PGZN-plus 125	0300023	

FMS-ZBA / ZBP 125 force-measuring jaws

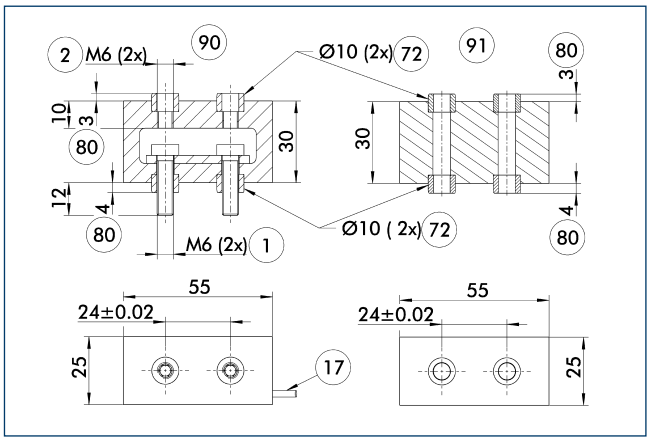

1 Gripper connection
2 Finger connection
17 Cable outlet
72 Fit for centering sleeves
80 Depth of the centering sleeve hole in the mating part
90 Active intermediate jaws
91 Passive intermediate jaws

Force measuring jaws measure gripping forces, but can also determine workpiece weights or dimensional deviations. There are active and passive intermediate jaws (FMS-ZBA or FMS-ZBP). At least one active force measuring jaw is required per gripper, the rest can be passive. For each active jaw, a FMS-A control unit and a FMS-AK connection cable are required.

Description	ID	Often combined
Active intermediate jaws		
FMS-ZBA 125	0301838	
Passive intermediate jaws		
FMS-ZBP 125	0301839	
Connection cables		
FMS-AK0200	0301820	●
FMS-AK0500	0301821	
FMS-AK1000	0301822	
FMS-AK2000	0301823	
Electronic processor		
FMS-A1	0301810	

ABR- / SBR-PGZN-plus 125 finger blanks

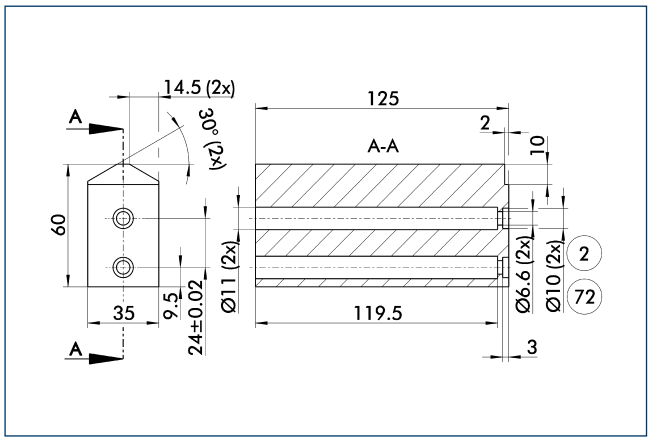

(2) Finger connection (72) Fit for centering sleeves

Finger blanks for customized subsequent machining.

Description	ID	Material	Scope of delivery
Finger blanks			
ABR-PGZN-plus 125	0300013	Aluminum	1
SBR-PGZN-plus 125	0300023	16MnCr15	1

Inductive proximity switches

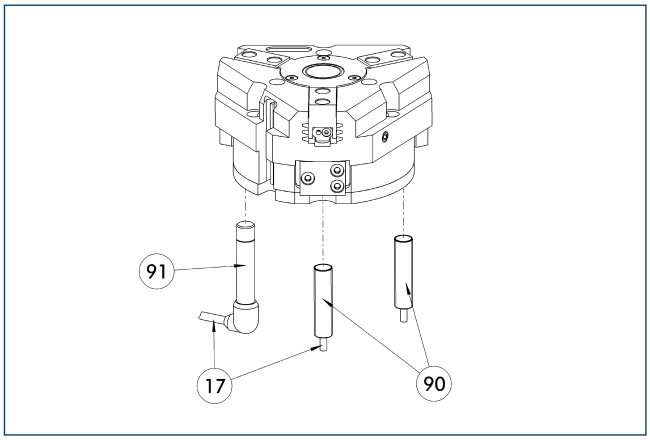

(17) Cable outlet (91) IN ...-SA sensor
(90) IN ... sensor

Directly mounted limit position monitor.

Description	ID	Often combined
Inductive proximity switches		
IN 80-S-M12	0301578	
IN 80-S-M8	0301478	●
INK 80-S	0301550	
Inductive proximity switches with lateral outlet		
IN 80-S-M12-SA	0301587	
IN 80-S-M8-SA	0301483	●
INK 80-S-SA	0301566	
Cable extensions		
KV BG12-SG12 3P-0030-PNP	0301999	
KV BG12-SG12 3P-0060-PNP	0301998	
KV BW08-SG08 3P-0030-PNP	0301495	
KV BW08-SG08 3P-0100-PNP	0301496	
KV BW08-SG08 3P-0200-PNP	0301497	●
KV BW12-SG12 3P-0030-PNP	0301595	
KV BW12-SG12 3P-0100-PNP	0301596	
KV BW12-SG12 3P-0200-PNP	0301597	
Clip for plug / socket		
CLI-M12	0301464	
CLI-M8	0301463	
Connection cables		
KA BG08-L 3P-0300-PNP	0301622	●
KA BG08-L 3P-0500-PNP	0301623	
KA BG12-L 3P-0500-PNP	30016369	
KA BW08-L 3P-0300-PNP	0301594	
KA BW08-L 3P-0500-PNP	0301502	
KA BW12-L 3P-0300-PNP	0301503	
KA BW12-L 3P-0500-PNP	0301507	
Sensor distributor		
V2-M8	0301775	●
V2-M12	0301776	●
V4-M12	0301747	
V4-M8	0301746	

ⓘ Two sensors (closer/S) are required for each unit, plus extension cables as an option. Please note the minimum permitted bending radii for the sensor cables, which are generally 35 mm.

Flexible position sensor

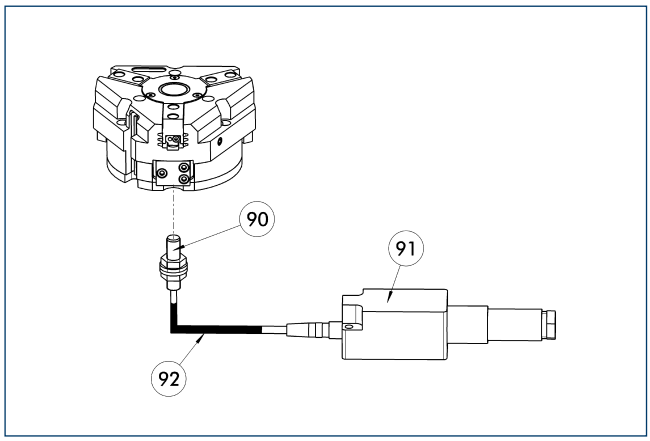

(90) FPS-S sensor
(91) FPS-F5 / -F5 T electronic processor
(92) Cable extensions

Flexible position monitoring of up to five positions.

Description	ID	Often combined
Mounting kit for FPS		
AS-FPS-PGZN-plus 125-1/PZB 160	0301636	
Electronic processor		
FPS-F5	0301805	●
FPS-F5 T	0301807	
Sensor		
FPS-S M8	0301704	
Clip for plug / socket		
CLI-M8	0301463	

ⓘ When using a FPS system, a FPS sensor (FPS-S) and a control unit (FPS-F5 / F5 T) are required for each gripper as well as a mounting kit (AS), if listed. Cable extensions (KV) are available as options in the "Accessories" catalog section.

MMS electronic magnetic switches

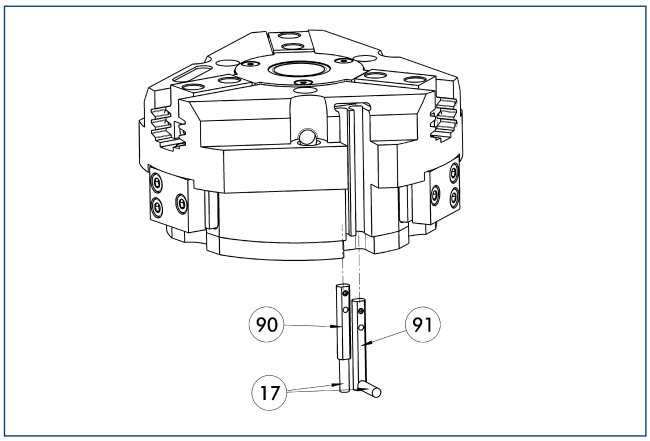

(17) Cable outlet
(90) MMS 22... sensor
(91) MMS 22...-SA sensor

End position monitoring for mounting in the C-slot.

Description	ID	Often combined
MMS electronic magnetic switches		
MMS 22-S-M8-PNP	0301032	●
MMSK 22-S-PNP	0301034	
MMS electronic magnetic switches with lateral cable outlet		
MMS 22-S-M8-PNP-SA	0301042	●
MMSK 22-S-PNP-SA	0301044	
Reed switches		
RMS 22-S-M8	0377720	●
Cable extensions		
KV BW08-SG08 3P-0030-PNP	0301495	
KV BW08-SG08 3P-0100-PNP	0301496	
KV BW08-SG08 3P-0200-PNP	0301497	●
Clip for plug / socket		
CLI-M8	0301463	
Connection cables		
KA BG08-L 3P-0300-PNP	0301622	●
KA BG08-L 3P-0500-PNP	0301623	
KA BW08-L 3P-0300-PNP	0301594	
KA BW08-L 3P-0500-PNP	0301502	
RSS radio sensor system		
RSS-T2	0377710	
Sensor distributor		
V2-M8	0301775	●
V4-M8	0301746	
V8-M8	0301751	

ⓘ Two sensors (closer/S) are required for each unit, plus extension cables as an option. Please note the minimum permitted bending radii for the sensor cables, which are generally 35 mm.

MMS PI1 programmable magnetic switches

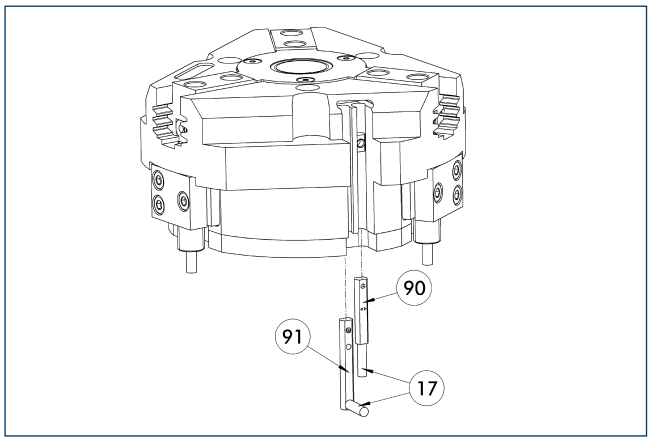

(17) Cable outlet
(91) MMS 22...-PI1-...-SA sensor
(90) MMS 22...-PI1-... sensor

Position query with one programmable position per sensor and electronics integrated in sensor. Programmable via MT magnet teaching tool (included in the scope of delivery) or ST plug teaching tool (optional). Limit position query mounted in C-groove. If the ST plug teaching tools are listed in the table, teaching can only take place with the ST plug teaching tools.

Description	ID	Often combined
Plug teaching tool		
ST-MMS 22-PI1-PNP	0301025	
MMS PI1 programmable magnetic switches		
MMS 22-PI1-S-M8-PNP	0301160	●
MMSK 22-PI1-S-PNP	0301162	
MMS PI1-HD programmable magnetic switches with stainless steel housing		
MMS 22-PI1-S-M8-PNP-HD	0301110	●
MMSK 22-PI1-S-PNP-HD	0301112	
MMS PI1 programmable magnetic switches with lateral cable outlet		
MMS 22-PI1-S-M8-PNP-SA	0301166	●
MMSK 22-PI1-S-PNP-SA	0301168	

ⓘ Two sensors (closer/S) are required for each unit, plus extension cables as an option. Please note the minimum permitted bending radii for the sensor cables, which are generally 35 mm. Connection cable, cable extensions, and sensor distributors can be found in the table for the MMS 22.

MMS PI2 programmable magnetic switches

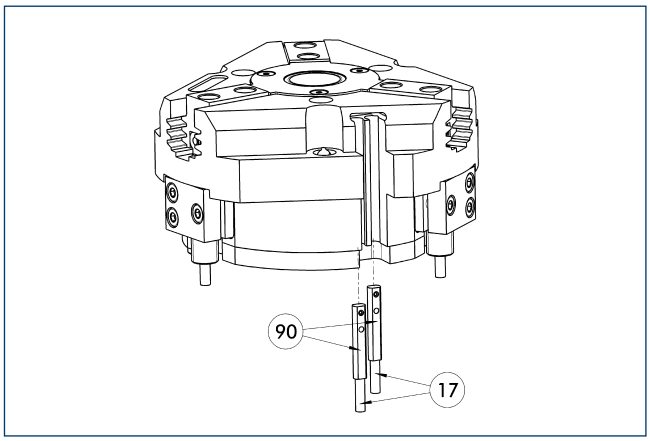

(17) Cable outlet
(90) MMS 22...-PI2-... sensor

Position query with two programmable positions per sensor and electronics integrated in sensor. Programmable via MT magnet teaching tool (included in the scope of delivery) or ST plug teaching tool (optional). Limit position query mounted in C-groove. If the ST plug teaching tools are listed in the table, teaching can only take place with the ST plug teaching tools.

Description	ID	Often combined
Plug teaching tool		
ST-MMS 22-PI2-PNP	0301026	
MMS PI2 programmable magnetic switches		
MMS 22-PI2-S-M8-PNP	0301180	●
MMSK 22-PI2-S-PNP	0301182	
MMS PI2-HD programmable magnetic switches with stainless steel housing		
MMS 22-PI2-S-M8-PNP-HD	0301130	●
MMSK 22-PI2-S-PNP-HD	0301132	

ⓘ Per unit one sensor (closer/S) is required, optionally a cable extension. Please note the minimum permitted bending radii for the sensor cables, which are generally 35 mm. Connection cable, cable extensions, and sensor distributors can be found in the table for the MMS-P 22.

MMS-P programmable magnetic switches

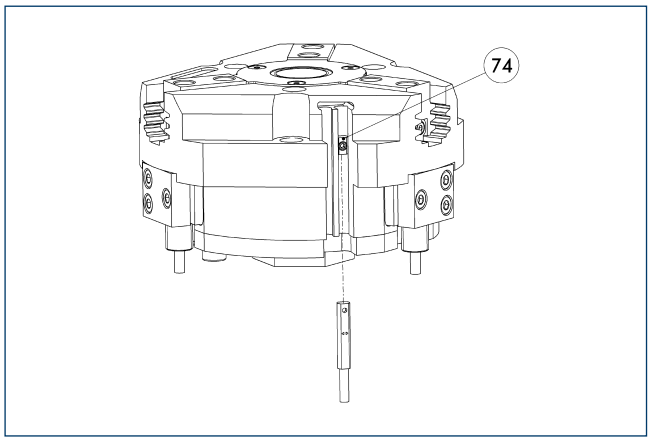

74 Stop for MMS-P

Position monitoring with two programmable positions per sensor. The end position monitoring is mounted in the C-slot.

Description	ID	Often combined
MMS-P programmable magnetic switches		
MMSK-P 22-S-PNP	0301371	
MMS-P 22-S-M8-PNP	0301370	●
Clip for plug / socket		
CLI-M8	0301463	
Connection cables		
KA BG08-L 4P-0500	0307767	●
KA BG08-L 4P-1000	0307768	
KA BW08-L 4P-0500	0307765	
KA BW08-L 4P-1000	0307766	
Sensor distributor		
V2-M8-4P-2XM8-3P	0301380	

ⓘ Per unit one sensor (closer/S) is required, optionally a cable extension. Please note the minimum permitted bending radii for the sensor cables, which are generally 35 mm.

APS-Z80 analog position sensor

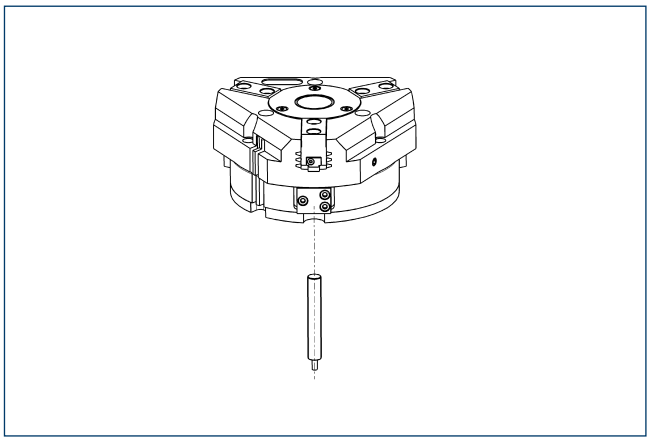

Contactlessly measuring, analog multi-position monitoring for any number of positions.

Description	ID	Often combined
Mounting kit for APS-Z80		
AS-APS-Z80-PGZN-plus 125-1	0302111	
Sensor		
APS-Z80-K	0302072	
APS-Z80-M8	0302070	●

ⓘ When using an APS system, one mounting kit (AS-APS-Z80) and one APS-Z80 sensor is required per gripper.

APS-M1 analog position sensor

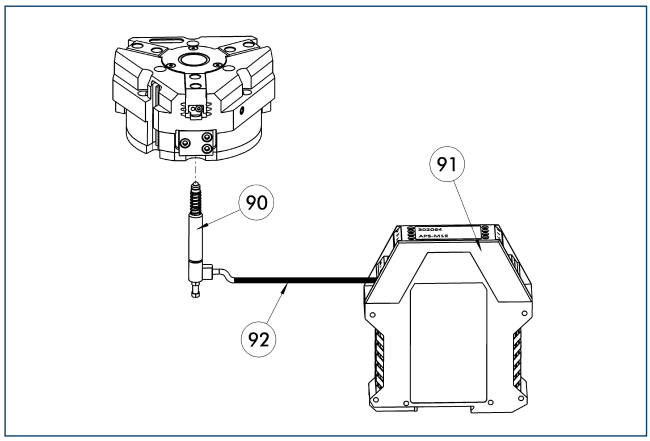

90 APS-M1S sensor
91 APS-M1E electronic processor
92 APS-K extension cable

Analog multi position monitoring for any desired positions.

Description	ID	Often combined
Mounting kit for APS-M1		
AS-APS-M1-PGZN-plus 125-1	0302081	
Connection cables		
APS-K0200	0302066	●
APS-K0700	0302068	
Electronic processor		
APS-M1E	0302064	
Sensor		
APS-M1S	0302062	

ⓘ When using an APS system, for each gripper a mounting kit (AS-APS-M1), an APS-M1S sensor (incl. 3 m cable) as well as an electronics (APS-M1e) are required. An extension cable (APS-K) can be connected between the sensor and the electronics as an option. The max. cable length between the sensor and the electronics is 10 m, between the electronics and their control unit (PLC) it is max. 1 m.

Cylindrical reed switches

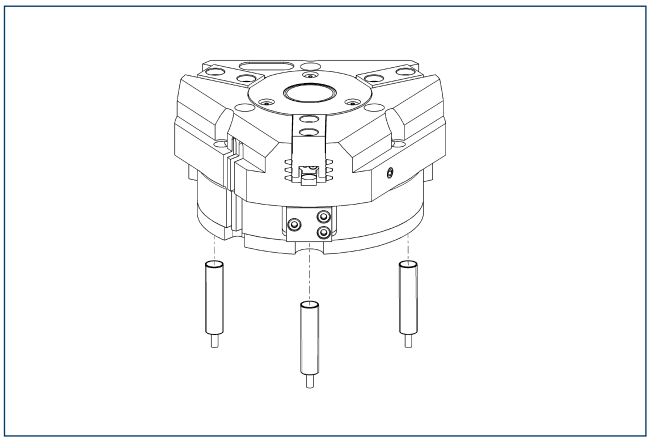

Limit position monitor can be mounted with mounting kit.

Description	ID	
Mounting kit for proximity switch		
AS-RMS 80 PGN/PZN-plus 100/125	0377726	
Reed switches		
RMS 80-S-M8	0377721	

ⓘ Two sensors (closer/S) are required for each unit, plus extension cables as an option. This mounting kit needs to be ordered optionally as an accessory. Two mounting kits are required per gripper. Please note the minimum permitted bending radii for the sensor cables, which are generally 35 mm.

PZB-plus 200

SCHUNK Grippers pneumatic | 3-Finger Centric Grippers | Universal Gripper

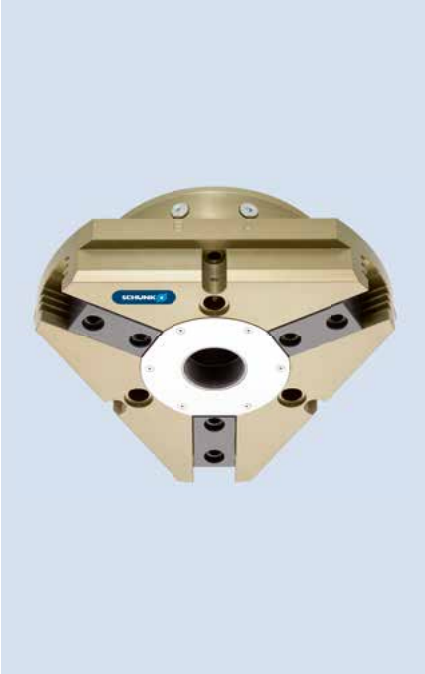

Gripping force, O.D. gripping

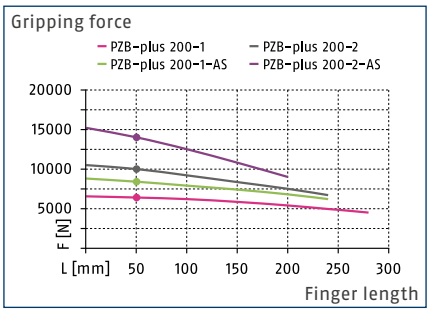

Gripping force, I.D. gripping

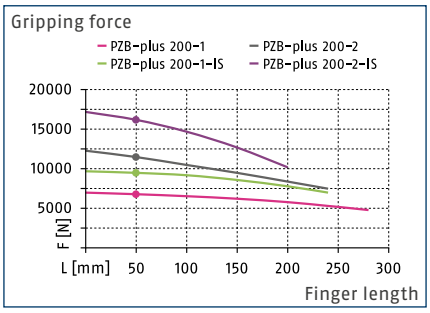

Finger load

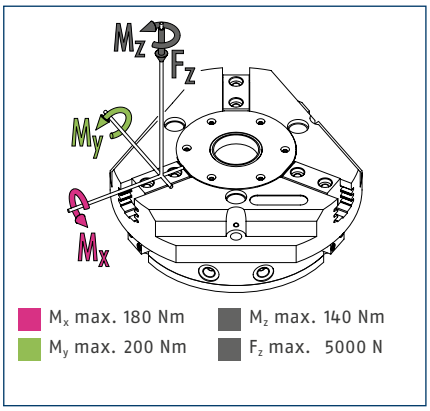

ⓘ The indicated moments and forces are static values, apply per base jaw and may occur simultaneously. M_y may arise in addition to the moment generated by the gripping force itself. If the max. permitted finger weight is exceeded, it is impreative to throttle the air supply so that the jaw movement occurs without any hitting or bouncing. Service life may be reduced.

Technical data

Description		PZB-plus 200-1	PZB-plus 200-2	PZB-plus 200-1-AS	PZB-plus 200-2-AS	PZB-plus 200-1-IS	PZB-plus 200-2-IS
ID		0304950	304951	0304952	304953	0304954	304955
Stroke per jaw	[mm]	25	14	25	14	25	14
Closing- / opening force	[N]	6400/6800	10000/11500	8400/-	13950/-	-/9500	-/16200
min. spring force	[N]			2000	3950	2700	4700
Weight	[kg]	11.5	11.9	15.6	15.8	15.2	15.4
Recommended workpiece weight	[kg]	32	55	32	55	32	55
Fluid consumption per double stroke	[cm³]	920	920	1550	1550	1550	1550
min. / max. operating pressure	[bar]	2/8	2/8	4/6.5	4/6.5	4/6.5	4/6.5
Nominal operating pressure	[bar]	6	6	6	6	6	6
Closing- / opening time	[s]	0.7/0.7	0.7/0.7	0.6/1	0.6/1	1/0.6	1/0.6
max. permitted finger length	[mm]	280	240	240	200	240	200
max. permitted weight per finger	[kg]	6.5	6.5	6.5	6.5	6.5	6.5
IP class		40	40	40	40	40	40
min. / max. ambient temperature	[°C]	5/90	5/90	5/90	5/90	5/90	5/90
Repeat accuracy	[mm]	0.05	0.05	0.05	0.05	0.05	0.05
Diameter of center bore	[mm]	44	44	44	44	44	44

Main view

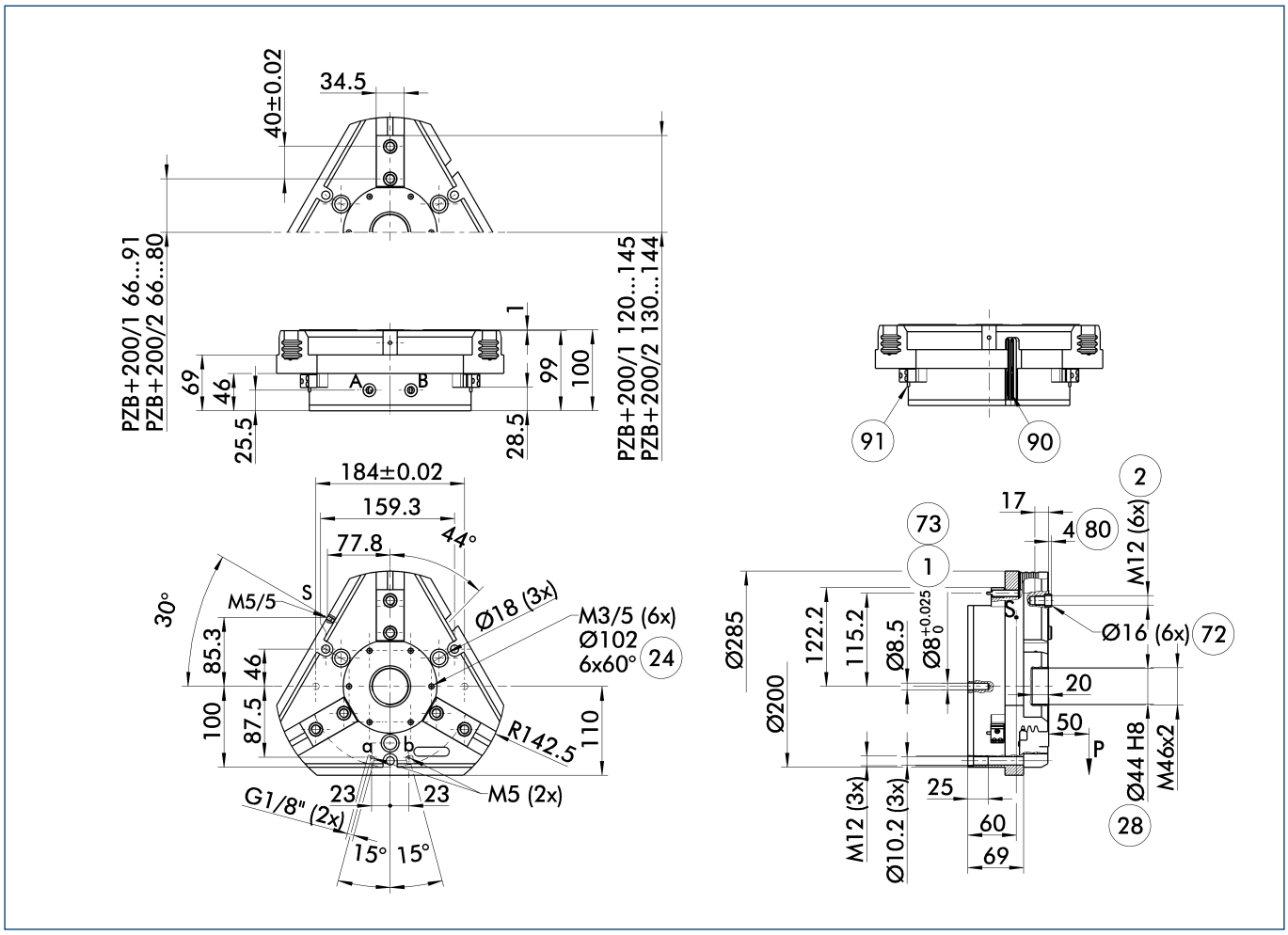

The drawing shows the gripper in the basic version with closed jaws, without dimensional consideration of the options described below.

ⓘ The SDV-P pressure maintenance valve can also be used for I.D. or O.D. gripping alternatively or in addition to the spring-loaded, mechanical gripping force maintenance device (see catalog section on "Accessories").

A, a Main / direct connection, gripper opening

B, b Main / direct connection, gripper closing

S Air purge connection (0.5 ... 1 bar)

(1) Gripper connection

(2) Finger connection

(24) Bolt circle

(28) Through-bore

(72) Fit for centering sleeves

(73) Fit for centering pins

(80) Depth of the centering sleeve hole in the mating part

(90) MMS 22... sensor

(91) IN ... sensor

Hose-free direct connection M5

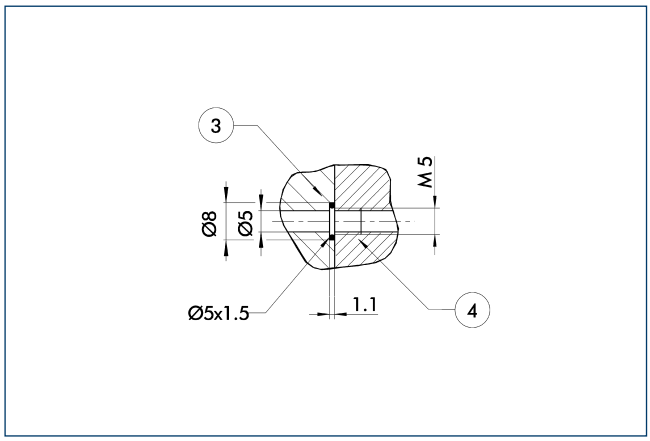

3 Adapter

4 Gripper

The direct connection is used for supplying compressed air without hoses. Instead, the pressure medium is fed through bore-holes in the mounting plate.

Gripping force maintenance device AS / IS

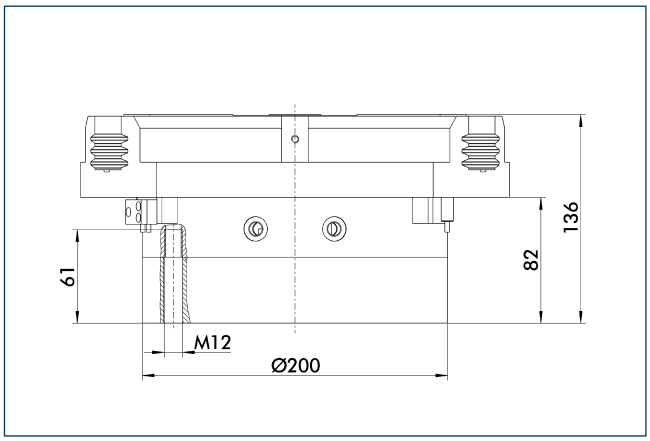

The mechanical maintenance of gripping force also assures a minimum gripping force in the case of a loss of pressure. With the AS / S variant, this acts as a closing force, and as an opening force for the IS variant. The maintenance of gripping force element can also be used as a means for increasing gripping force or for single actuated gripping.

Spring-loaded pressure piece

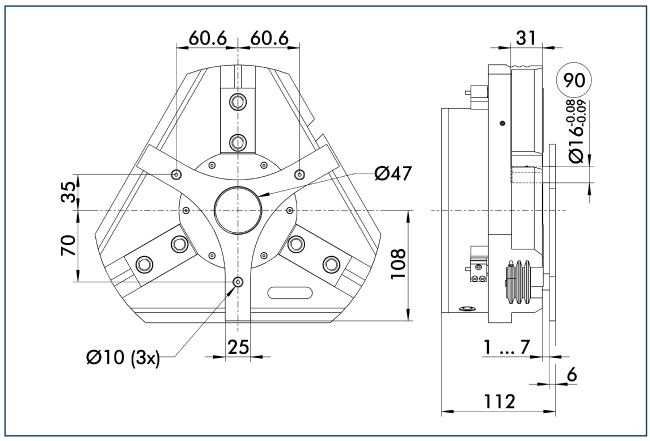

90 Guide pin

For spring-supported positioning of the workpiece against a stop after the gripper has opened. Especially developed for loading machines.

Description	ID	Stroke [mm]	Min. force [N]
Spring-loaded pressure piece			
A-PZB-plus 200	0304956	6	247

SDV-P pressure maintenance valve

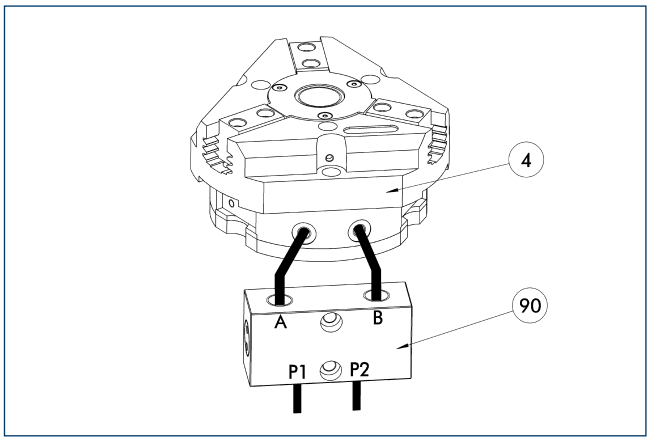

4 Gripper

90 SDV-P pressure maintenance valve

The SDV-P pressure maintenance valves ensure that the pressure in the piston chamber of pneumatic gripping, rotary, linear, and quick-change modules is maintained temporarily during an emergency stop.

Description	ID	
Pressure maintenance valve		
SDV-P 07	0403131	

BSWS jaw quick-change systems

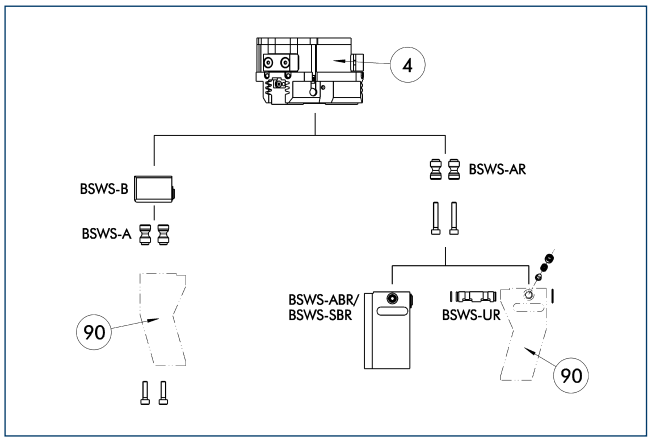

(4) Gripper
(90) Customized gripper fingers

There are various jaw quick-change systems available for the grippers. For detailed information, refer to the appropriate product.

Description	ID	
Jaw quick-change system base		
BSWS-B 200	0303033	
Jaw quick-change system adapter		
BSWS-A 200	0303032	

ⓘ Only the systems listed in the table can be used.

ZBA L-plus 200 intermediate jaws

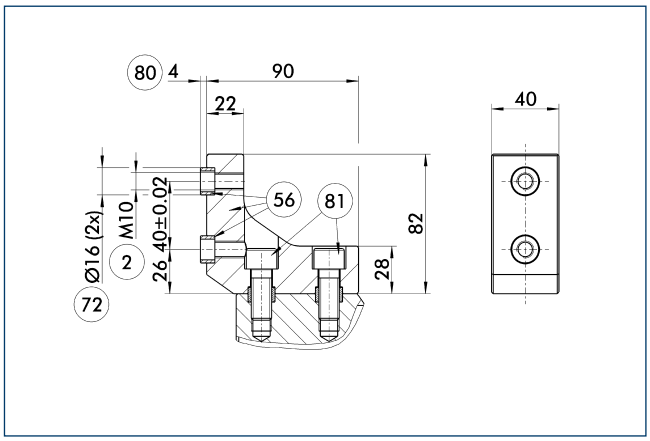

(2) Finger connection
(56) Included in delivery
(72) Fit for centering sleeves
(80) Depth of the centering sleeve hole in the mating part
(81) Not included in the scope of delivery

Optionally intermediate jaws can be used, enabling direct connection and alignment of top jaws and various standard accessories in Z-direction.

Description	ID	Material	Scope of delivery
Intermediate jaws			
ZBA-L-plus 200	0311772	Aluminum	1

UZB 200 universal intermediate jaw

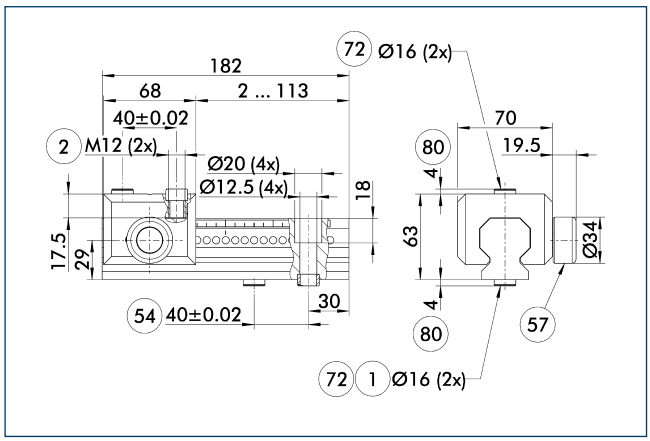

(1) Gripper connection
(2) Finger connection
(54) Optional right or left connection
(57) Locking
(72) Fit for centering sleeves
(80) Depth of the centering sleeve hole in the mating part

The universal intermediate jaw allows fast tool-free and reliable plugging and shifting of top jaws at the gripper.

Description	ID	Grid dimension [mm]
Universal intermediate jaw		
UZB 200	0300047	7
UZB-S 200	5518275	7
Finger blanks		
ABR-PGZN-plus 200	0300015	
SBR-PGZN-plus 200	0300025	

FMS-ZBA / ZBP 200 force-measuring jaws

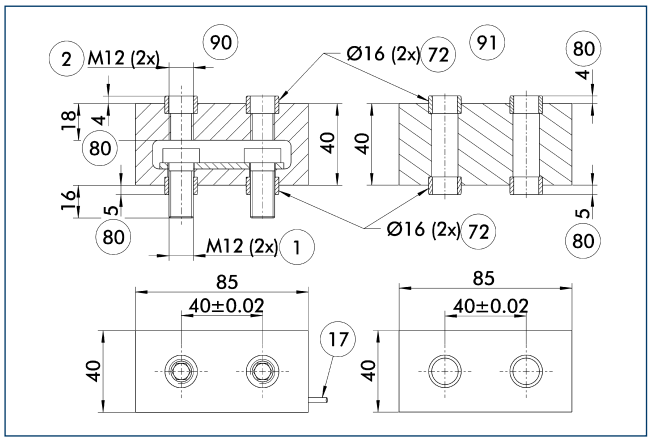

1 Gripper connection
2 Finger connection
17 Cable outlet
72 Fit for centering sleeves
80 Depth of the centering sleeve hole in the mating part
90 Active intermediate jaws
91 Passive intermediate jaws

Force measuring jaws measure gripping forces, but can also determine workpiece weights or dimensional deviations. There are active and passive intermediate jaws (FMS-ZBA or FMS-ZBP). At least one active force measuring jaw is required per gripper, the rest can be passive. For each active jaw, a FMS-A control unit and a FMS-AK connection cable are required.

Description	ID	Often combined
Active intermediate jaws		
FMS-ZBA 200	0301842	
Passive intermediate jaws		
FMS-ZBP 200	0301843	
Connection cables		
FMS-AK0200	0301820	●
FMS-AK0500	0301821	
FMS-AK1000	0301822	
FMS-AK2000	0301823	
Electronic processor		
FMS-A2	0301811	

ABR- / SBR-PGZN-plus 200 finger blanks

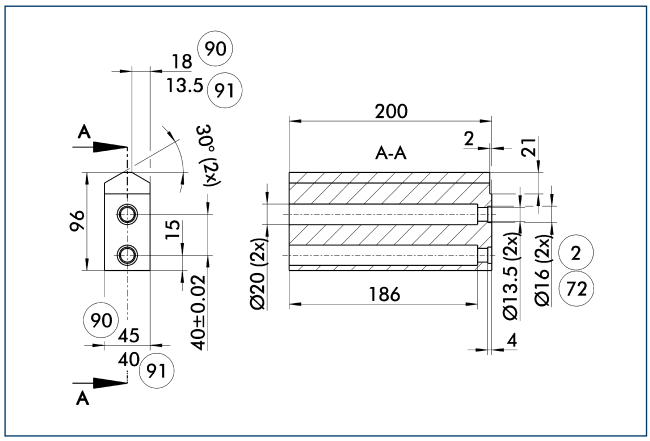

(2) Finger connection
(72) Fit for centering sleeves
(90) ABR-PGZN-plus
(91) SBR-PGZN-plus

Finger blanks for customized subsequent machining.

Description	ID	Material	Scope of delivery
Finger blanks			
ABR-PGZN-plus 200	0300015	Aluminum	1
SBR-PGZN-plus 200	0300025	16MnCr5	1

Inductive proximity switches

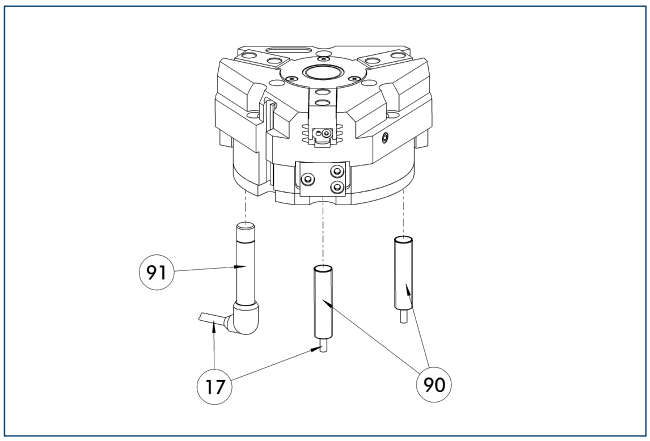

(17) Cable outlet
(90) IN ... sensor
(91) IN ...-SA sensor

Directly mounted limit position monitor.

Description	ID	Often combined
Inductive proximity switches		
IN 80-S-M12	0301578	
IN 80-S-M8	0301478	●
INK 80-S	0301550	
Inductive proximity switches with lateral outlet		
IN 80-S-M12-SA	0301587	
IN 80-S-M8-SA	0301483	●
INK 80-S-SA	0301566	
Cable extensions		
KV BG12-SG12 3P-0030-PNP	0301999	
KV BG12-SG12 3P-0060-PNP	0301998	
KV BW08-SG08 3P-0030-PNP	0301495	
KV BW08-SG08 3P-0100-PNP	0301496	
KV BW08-SG08 3P-0200-PNP	0301497	●
KV BW12-SG12 3P-0030-PNP	0301595	
KV BW12-SG12 3P-0100-PNP	0301596	
KV BW12-SG12 3P-0200-PNP	0301597	
Clip for plug / socket		
CLI-M12	0301464	
CLI-M8	0301463	
Connection cables		
KA BG08-L 3P-0300-PNP	0301622	●
KA BG08-L 3P-0500-PNP	0301623	
KA BG12-L 3P-0500-PNP	30016369	
KA BW08-L 3P-0300-PNP	0301594	
KA BW08-L 3P-0500-PNP	0301502	
KA BW12-L 3P-0300-PNP	0301503	
KA BW12-L 3P-0500-PNP	0301507	
Sensor distributor		
V2-M8	0301775	●
V2-M12	0301776	●
V4-M12	0301747	
V4-M8	0301746	

ⓘ Two sensors (closer/S) are required for each unit, plus extension cables as an option. Please note the minimum permitted bending radii for the sensor cables, which are generally 35 mm.

Flexible position sensor

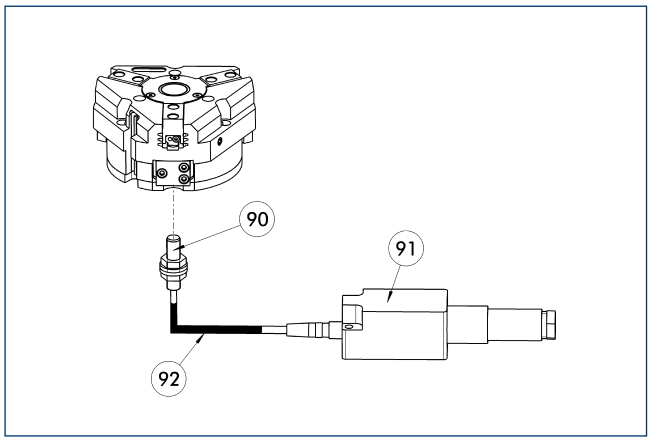

(90) FPS-S sensor
(91) FPS-F5 / -F5 T electronic processor
(92) Cable extensions

Flexible position monitoring of up to five positions.

Description	ID	Often combined
Mounting kit for FPS		
AS-FPS-PGZN-plus 200-1	0301640	
AS-FPS-PGZN-plus 200-2	0301641	
Electronic processor		
FPS-F5	0301805	●
FPS-F5 T	0301807	
Sensor		
FPS-S M8	0301704	
Clip for plug / socket		
CLI-M8	0301463	

ⓘ When using a FPS system, a FPS sensor (FPS-S) and a control unit (FPS-F5 / F5 T) are required for each gripper as well as a mounting kit (AS), if listed. Cable extensions (KV) are available as options in the "Accessories" catalog section.

MMS electronic magnetic switches

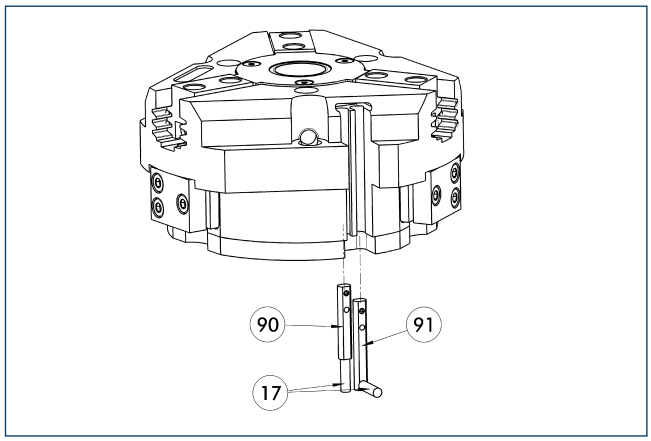

(17) Cable outlet
(90) MMS 22... sensor
(91) MMS 22...-SA sensor

End position monitoring for mounting in the C-slot.

Description	ID	Often combined
MMS electronic magnetic switches		
MMS 22-S-M8-PNP	0301032	●
MMSK 22-S-PNP	0301034	
MMS electronic magnetic switches with lateral cable outlet		
MMS 22-S-M8-PNP-SA	0301042	●
MMSK 22-S-PNP-SA	0301044	
Reed switches		
RMS 22-S-M8	0377720	●
Cable extensions		
KV BW08-SG08 3P-0030-PNP	0301495	
KV BW08-SG08 3P-0100-PNP	0301496	
KV BW08-SG08 3P-0200-PNP	0301497	●
Clip for plug / socket		
CLI-M8	0301463	
Connection cables		
KA BG08-L 3P-0300-PNP	0301622	●
KA BG08-L 3P-0500-PNP	0301623	
KA BW08-L 3P-0300-PNP	0301594	
KA BW08-L 3P-0500-PNP	0301502	
RSS radio sensor system		
RSS-T2	0377710	
Sensor distributor		
V2-M8	0301775	●
V4-M8	0301746	
V8-M8	0301751	

ⓘ Two sensors (closer/S) are required for each unit, plus extension cables as an option. Please note the minimum permitted bending radii for the sensor cables, which are generally 35 mm.

MMS PI1 programmable magnetic switches

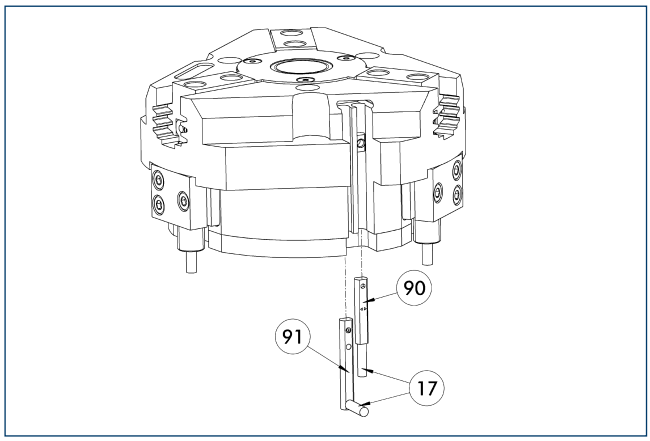

(17) Cable outlet
(91) MMS 22...-PI1-...-SA sensor
(90) MMS 22...-PI1-... sensor

Position query with one programmable position per sensor and electronics integrated in sensor. Programmable via MT magnet teaching tool (included in the scope of delivery) or ST plug teaching tool (optional). Limit position query mounted in C-groove. If the ST plug teaching tools are listed in the table, teaching can only take place with the ST plug teaching tools.

Description	ID	Often combined
MMS PI1 programmable magnetic switches		
MMS 22-PI1-S-M8-PNP	0301160	●
MMSK 22-PI1-S-PNP	0301162	
MMS PI1-HD programmable magnetic switches with stainless steel housing		
MMS 22-PI1-S-M8-PNP-HD	0301110	●
MMSK 22-PI1-S-PNP-HD	0301112	
MMS PI1 programmable magnetic switches with lateral cable outlet		
MMS 22-PI1-S-M8-PNP-SA	0301166	●
MMSK 22-PI1-S-PNP-SA	0301168	

ⓘ Two sensors (closer/S) are required for each unit, plus extension cables as an option. Please note the minimum permitted bending radii for the sensor cables, which are generally 35 mm. Connection cable, cable extensions, and sensor distributors can be found in the table for the MMS 22.

MMS PI2 programmable magnetic switches

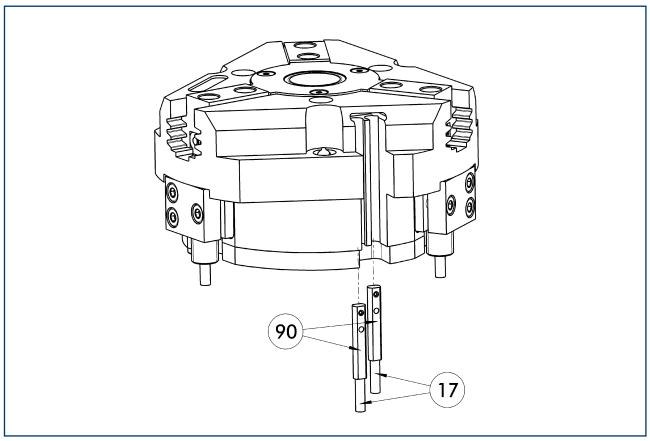

(17) Cable outlet
(90) MMS 22...-PI2-... sensor

Position query with two programmable positions per sensor and electronics integrated in sensor. Programmable via MT magnet teaching tool (included in the scope of delivery) or ST plug teaching tool (optional). Limit position query mounted in C-groove. If the ST plug teaching tools are listed in the table, teaching can only take place with the ST plug teaching tools.

Description	ID	Often combined
MMS PI2 programmable magnetic switches		
MMS 22-PI2-S-M8-PNP	0301180	●
MMSK 22-PI2-S-PNP	0301182	
MMS PI2-HD programmable magnetic switches with stainless steel housing		
MMS 22-PI2-S-M8-PNP-HD	0301130	●
MMSK 22-PI2-S-PNP-HD	0301132	

ⓘ Per unit one sensor (closer/S) is required, optionally a cable extension. Please note the minimum permitted bending radii for the sensor cables, which are generally 35 mm. Connection cable, cable extensions, and sensor distributors can be found in the table for the MMS-P 22.

MMS-P programmable magnetic switches

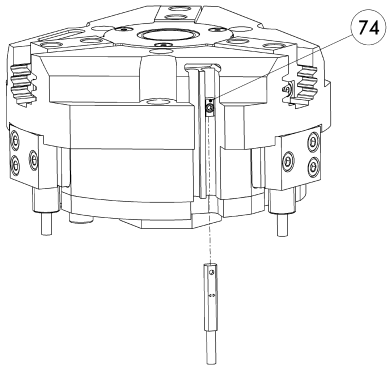

74 Stop for MMS-P

Position monitoring with two programmable positions per sensor. The end position monitoring is mounted in the C-slot.

Description	ID	Often combined
MMS-P programmable magnetic switches		
MMSK-P 22-S-PNP	0301371	
MMS-P 22-S-M8-PNP	0301370	●
Clip for plug / socket		
CLI-M8	0301463	
Connection cables		
KA BG08-L 4P-0500	0307767	●
KA BG08-L 4P-1000	0307768	
KA BW08-L 4P-0500	0307765	
KA BW08-L 4P-1000	0307766	
Sensor distributor		
V2-M8-4P-2XM8-3P	0301380	

ⓘ Per unit one sensor (closer/S) is required, optionally a cable extension. Please note the minimum permitted bending radii for the sensor cables, which are generally 35 mm.

APS-Z80 analog position sensor

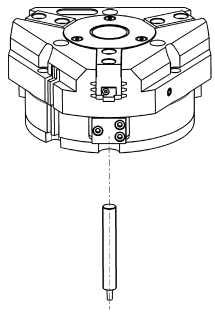

Contactlessly measuring, analog multi-position monitoring for any number of positions.

Description	ID	Often combined
Mounting kit for APS-Z80		
AS-APS-Z80-PGZN-plus 160-1/200-2/240-2	0302113	
AS-APS-Z80-PGZN-plus 200-1	0302115	
Sensor		
APS-Z80-K	0302072	
APS-Z80-M8	0302070	●

ⓘ When using an APS system, one mounting kit (AS-APS-Z80) and one APS-Z80 sensor is required per gripper.

APS-M1 analog position sensor

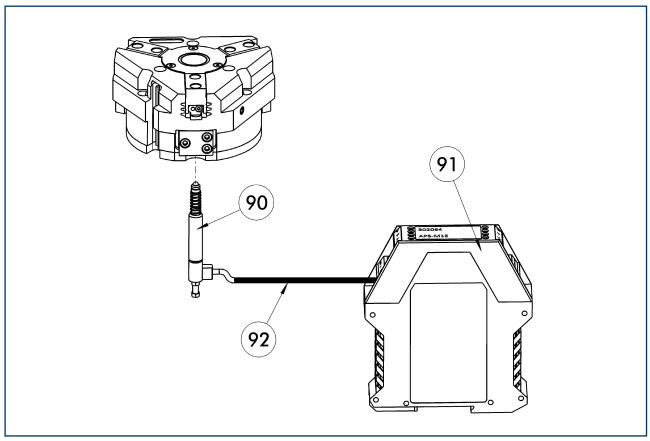

(90) APS-M1S sensor
(91) APS-M1E electronic processor
(92) APS-K extension cable

Analog multi position monitoring for any desired positions.

Description	ID	Often combined
Mounting kit for APS-M1		
AS-APS-M1-PGZN-plus 200-1/380-2	0302085	
AS-APS-M1-PGZN-plus 200-2	0302086	
Connection cables		
APS-K0200	0302066	●
APS-K0700	0302068	
Electronic processor		
APS-M1E	0302064	
Sensor		
APS-M1S	0302062	

ⓘ When using an APS system, for each gripper a mounting kit (AS-APS-M1), an APS-M1S sensor (incl. 3 m cable) as well as an electronics (APS-M1e) are required. An extension cable (APS-K) can be connected between the sensor and the electronics as an option. The max. cable length between the sensor and the electronics is 10 m, between the electronics and their control unit (PLC) it is max. 1 m.

Cylindrical reed switches

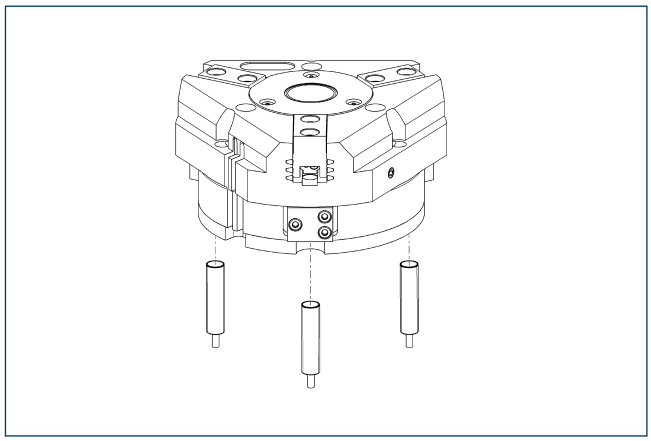

Limit position monitor can be mounted with mounting kit.

Description	ID	
Mounting kit for proximity switch		
AS-RMS 80 PGN/PZN-plus 160-380	0377727	
Reed switches		
RMS 80-S-M8	0377721	

ⓘ Two sensors (closer/S) are required for each unit, plus extension cables as an option. This mounting kit needs to be ordered optionally as an accessory. Two mounting kits are required per gripper. Please note the minimum permitted bending radii for the sensor cables, which are generally 35 mm.

PZB-plus 240

SCHUNK Grippers pneumatic | 3-Finger Centric Grippers | Universal Gripper

Gripping force, O.D. gripping

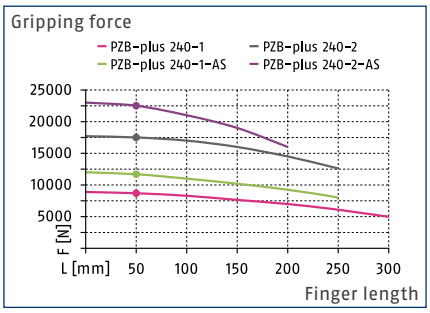

Gripping force, I.D. gripping

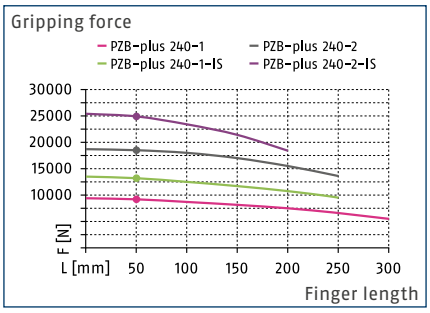

Finger load

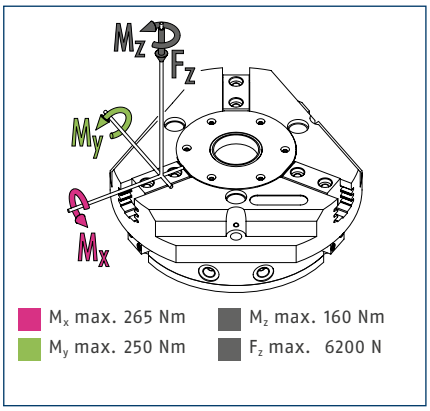

ⓘ The indicated moments and forces are static values, apply per base jaw and may occur simultaneously. M_y may arise in addition to the moment generated by the gripping force itself. If the max. permitted finger weight is exceeded, it is impreative to throttle the air supply so that the jaw movement occurs without any hitting or bouncing. Service life may be reduced.

Technical data

Description		PZB-plus 240-1	PZB-plus 240-2	PZB-plus 240-1-AS	PZB-plus 240-2-AS	PZB-plus 240-1-IS	PZB-plus 240-2-IS
ID		0304960	304961	0304962	0304963	0304964	0304965
Stroke per jaw	[mm]	30	17	30	17	30	17
Closing- / opening force	[N]	8700/9200	17500/18500	11700/-	22500/-	-/13150	-/24900
min. spring force	[N]			3000	5000	3950	6400
Weight	[kg]	20.5	21	24	24	24	24
Recommended workpiece weight	[kg]	45	90	45	90	45	90
Fluid consumption per double stroke	[cm³]	1650	1650	2700	2700	3050	3050
min. / max. operating pressure	[bar]	2/8	2/8	4/6.5	4/6.5	4/6.5	4/6.5
Nominal operating pressure	[bar]	6	6	6	6	6	6
Closing- / opening time	[s]	0.9/0.9	0.9/0.9	0.8/1.4	0.8/1.4	1.7/0.8	1.7/0.8
max. permitted finger length	[mm]	300	250	250	200	250	200
max. permitted weight per finger	[kg]	8.5	8.5	8.5	8.5	8.5	8.5
IP class		40	40	40	40	40	40
min. / max. ambient temperature	[°C]	5/90	5/90	5/90	5/90	5/90	5/90
Repeat accuracy	[mm]	0.05	0.05	0.05	0.05	0.05	0.05
Diameter of center bore	[mm]	54	54	54	54	54	54

Main view

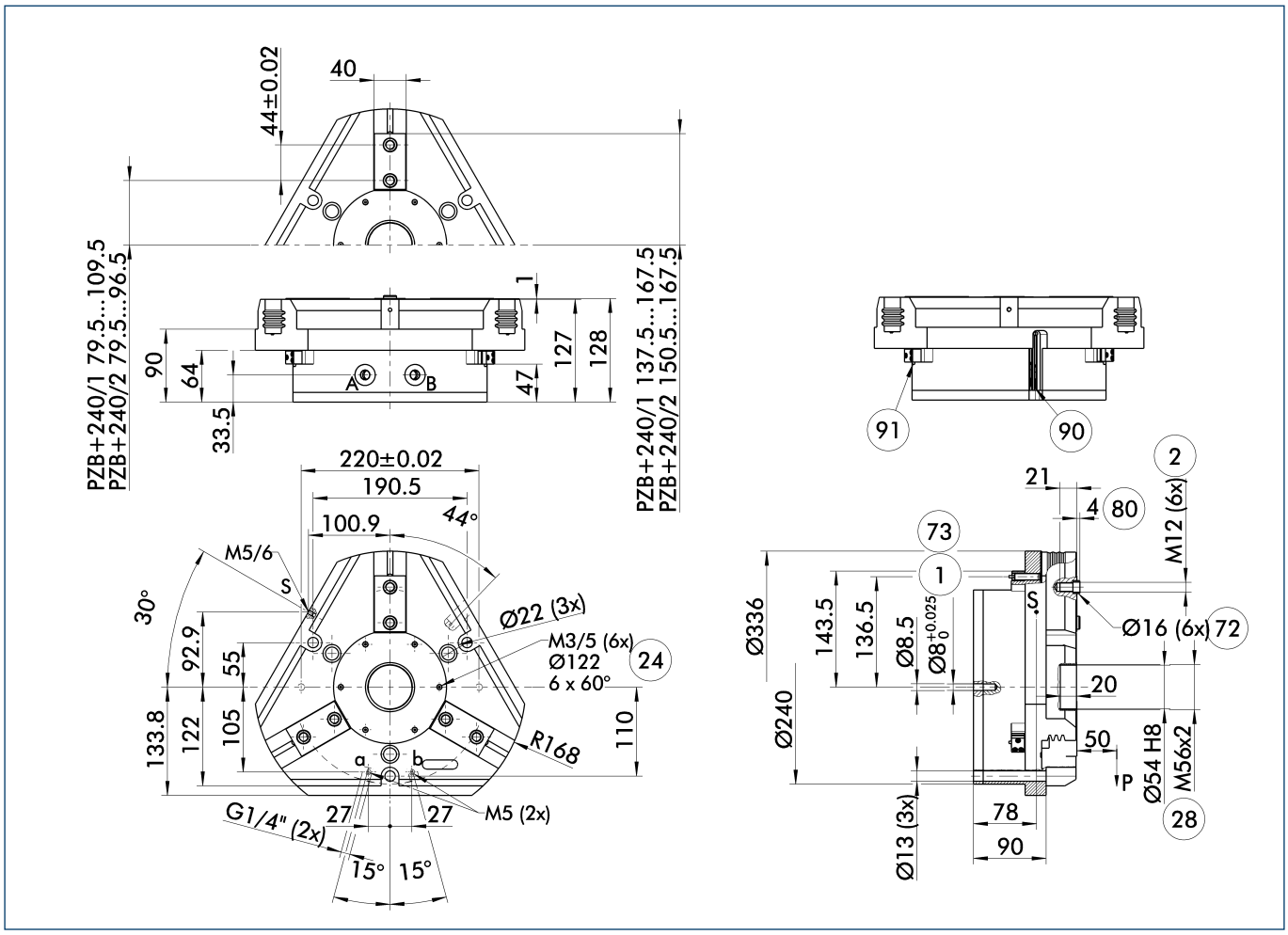

The drawing shows the gripper in the basic version with closed jaws, without dimensional consideration of the options described below.

ⓘ The SDV-P pressure maintenance valve can also be used for I.D. or O.D. gripping alternatively or in addition to the spring-loaded, mechanical gripping force maintenance device (see catalog section on "Accessories").

A, a Main / direct connection, gripper opening

B, b Main / direct connection, gripper closing

S Air purge connection (0.5 ... 1 bar)

(1) Gripper connection

(2) Finger connection

(24) Bolt circle

(28) Through-bore

(72) Fit for centering sleeves

(73) Fit for centering pins

(80) Depth of the centering sleeve hole in the mating part

(90) MMS 22... sensor

(91) IN ... sensor

Hose-free direct connection M5

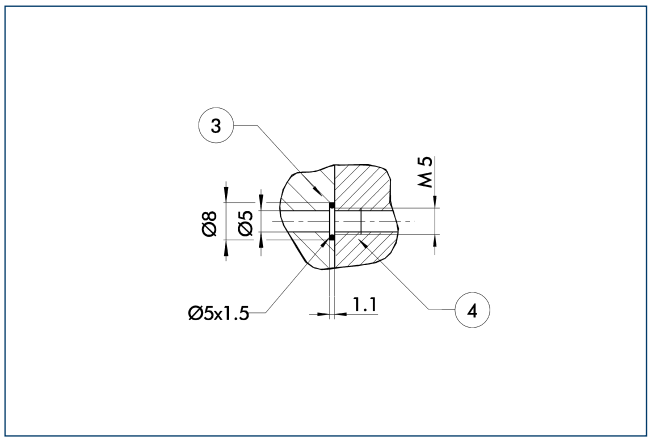

3 Adapter

4 Gripper

The direct connection is used for supplying compressed air without hoses. Instead, the pressure medium is fed through bore-holes in the mounting plate.

Gripping force maintenance device AS / IS

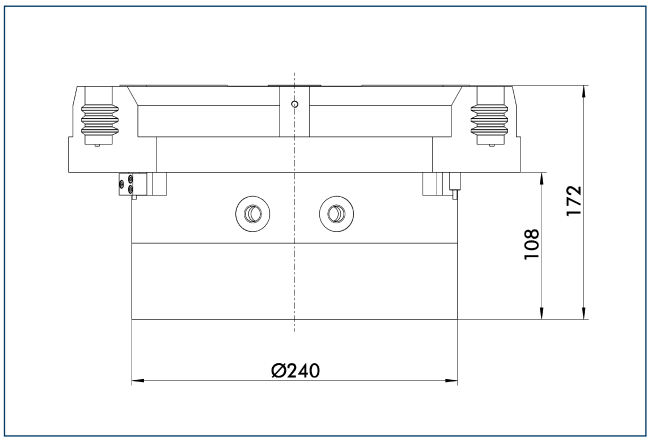

The mechanical maintenance of gripping force also assures a minimum gripping force in the case of a loss of pressure. With the AS / S variant, this acts as a closing force, and as an opening force for the IS variant. The maintenance of gripping force element can also be used as a means for increasing gripping force or for single actuated gripping.

Spring-loaded pressure piece

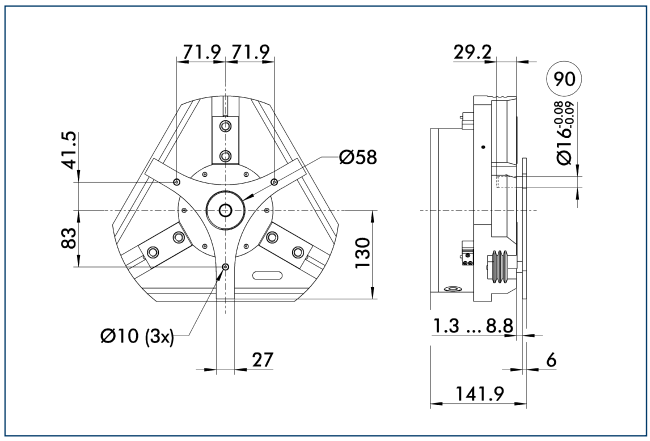

90 Guide pin

For spring-supported positioning of the workpiece against a stop after the gripper has opened. Especially developed for loading machines.

Description	ID	Stroke [mm]	Min. force [N]
Spring-loaded pressure piece			
A-PZB-plus 240	0304966	7.5	247

SDV-P pressure maintenance valve

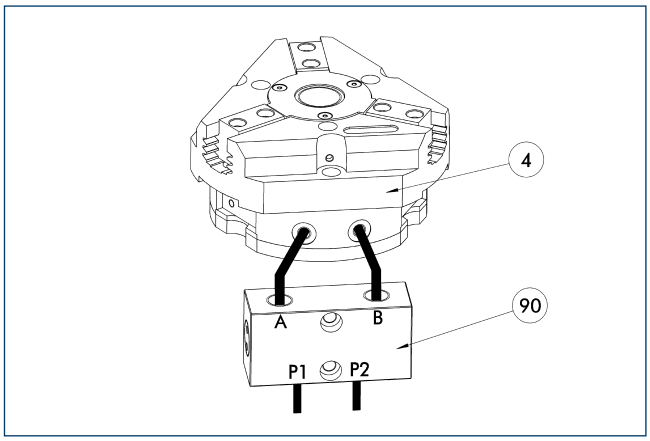

4 Gripper

90 SDV-P pressure maintenance valve

The SDV-P pressure maintenance valves ensure that the pressure in the piston chamber of pneumatic gripping, rotary, linear, and quick-change modules is maintained temporarily during an emergency stop.

Description	ID	
Pressure maintenance valve		
SDV-P 07	0403131	

ZBA L-plus 240 intermediate jaws

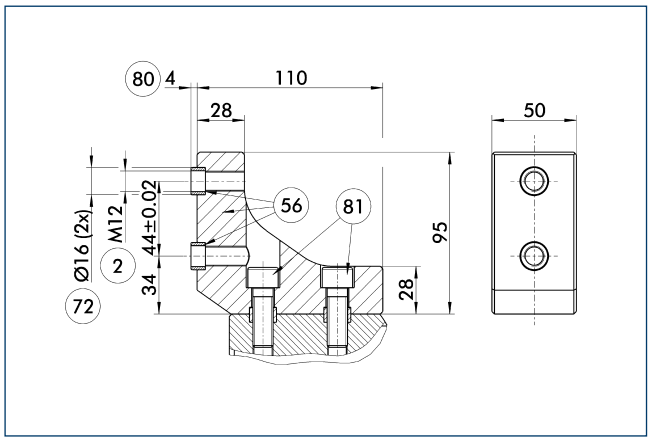

(2) Finger connection
(56) Included in delivery
(72) Fit for centering sleeves
(80) Depth of the centering sleeve hole in the mating part
(81) Not included in the scope of delivery

Optionally intermediate jaws can be used, enabling direct connection and alignment of top jaws and various standard accessories in Z-direction.

Description	ID	Material	Scope of delivery
Intermediate jaws			
ZBA-L-plus 240	0311782	Aluminum	1

ABR- / SBR-PGZN-plus 240 finger blanks

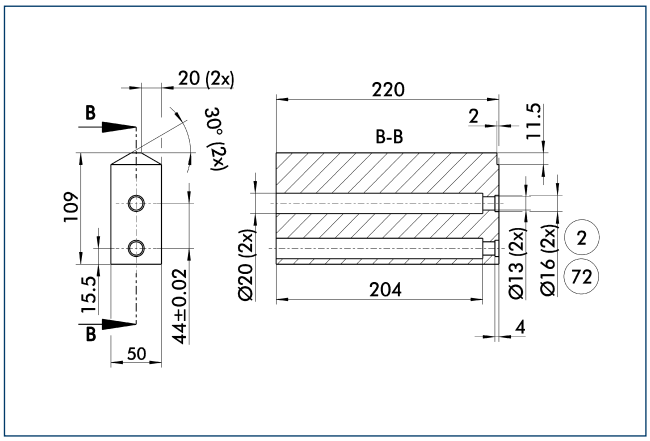

(2) Finger connection
(72) Fit for centering sleeves

Finger blanks for customized subsequent machining.

Description	ID	Material	Scope of delivery
Finger blanks			
ABR-PGZN-plus 240	0300017	Aluminum	1
SBR-PGZN-plus 240	0300027	16MnCr5	1

Inductive proximity switches

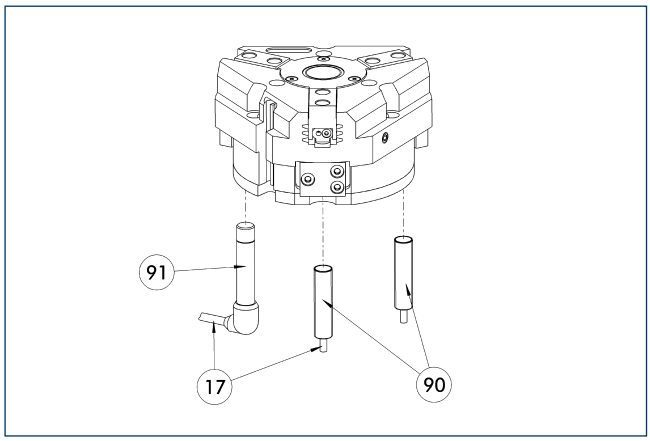

(17) Cable outlet
(91) IN ...-SA sensor
(90) IN ... sensor

Directly mounted limit position monitor.

Description	ID	Often combined
Inductive proximity switches		
IN 80-S-M12	0301578	
IN 80-S-M8	0301478	●
INK 80-S	0301550	
Inductive proximity switches with lateral outlet		
IN 80-S-M12-SA	0301587	
IN 80-S-M8-SA	0301483	●
INK 80-S-SA	0301566	
Cable extensions		
KV BG12-SG12 3P-0030-PNP	0301999	
KV BG12-SG12 3P-0060-PNP	0301998	
KV BW08-SG08 3P-0030-PNP	0301495	
KV BW08-SG08 3P-0100-PNP	0301496	
KV BW08-SG08 3P-0200-PNP	0301497	●
KV BW12-SG12 3P-0030-PNP	0301595	
KV BW12-SG12 3P-0100-PNP	0301596	
KV BW12-SG12 3P-0200-PNP	0301597	
Clip for plug / socket		
CLI-M12	0301464	
CLI-M8	0301463	
Connection cables		
KA BG08-L 3P-0300-PNP	0301622	●
KA BG08-L 3P-0500-PNP	0301623	
KA BG12-L 3P-0500-PNP	30016369	
KA BW08-L 3P-0300-PNP	0301594	
KA BW08-L 3P-0500-PNP	0301502	
KA BW12-L 3P-0300-PNP	0301503	
KA BW12-L 3P-0500-PNP	0301507	
Sensor distributor		
V2-M8	0301775	●
V2-M12	0301776	●
V4-M12	0301747	
V4-M8	0301746	

ⓘ Two sensors (closer/S) are required for each unit, plus extension cables as an option. Please note the minimum permitted bending radii for the sensor cables, which are generally 35 mm.

Flexible position sensor

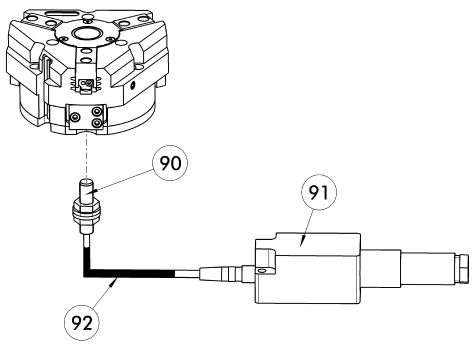

(90) FPS-S sensor
(91) FPS-F5 / -F5 T electronic processor
(92) Cable extensions

Flexible position monitoring of up to five positions.

Description	ID	Often combined
Mounting kit for FPS		
AS-FPS-PGZN-plus 240-1	0301643	
AS-FPS-PGZN-plus 240-2	0301644	
Electronic processor		
FPS-F5	0301805	●
FPS-F5 T	0301807	
Sensor		
FPS-S M8	0301704	
Clip for plug / socket		
CLI-M8	0301463	

ⓘ When using a FPS system, a FPS sensor (FPS-S) and a control unit (FPS-F5 / F5 T) are required for each gripper as well as a mounting kit (AS), if listed. Cable extensions (KV) are available as options in the "Accessories" catalog section.

MMS electronic magnetic switches

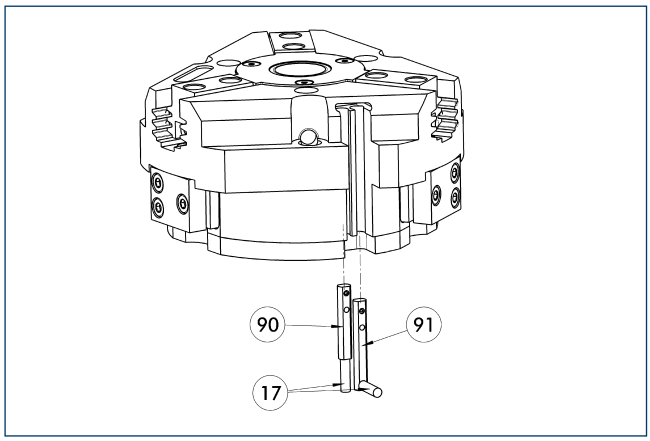

(17) Cable outlet
(91) MMS 22...-SA sensor
(90) MMS 22... sensor

End position monitoring for mounting in the C-slot.

Description	ID	Often combined
MMS electronic magnetic switches		
MMS 22-S-M8-PNP	0301032	●
MMSK 22-S-PNP	0301034	
MMS electronic magnetic switches with lateral cable outlet		
MMS 22-S-M8-PNP-SA	0301042	●
MMSK 22-S-PNP-SA	0301044	
Reed switches		
RMS 22-S-M8	0377720	●
Cable extensions		
KV BW08-SG08 3P-0030-PNP	0301495	
KV BW08-SG08 3P-0100-PNP	0301496	
KV BW08-SG08 3P-0200-PNP	0301497	●
Clip for plug / socket		
CLI-M8	0301463	
Connection cables		
KA BG08-L 3P-0300-PNP	0301622	●
KA BG08-L 3P-0500-PNP	0301623	
KA BW08-L 3P-0300-PNP	0301594	
KA BW08-L 3P-0500-PNP	0301502	
RSS radio sensor system		
RSS-T2	0377710	
Sensor distributor		
V2-M8	0301775	●
V4-M8	0301746	
V8-M8	0301751	

ⓘ Two sensors (closer/S) are required for each unit, plus extension cables as an option. Please note the minimum permitted bending radii for the sensor cables, which are generally 35 mm.

MMS PI1 programmable magnetic switches

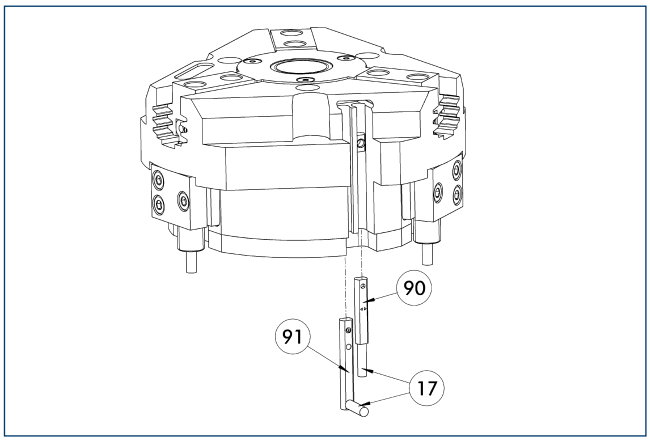

(17) Cable outlet
(91) MMS 22...-PI1-...-SA sensor
(90) MMS 22...-PI1-... sensor

Position query with one programmable position per sensor and electronics integrated in sensor. Programmable via MT magnet teaching tool (included in the scope of delivery) or ST plug teaching tool (optional). Limit position query mounted in C-groove. If the ST plug teaching tools are listed in the table, teaching can only take place with the ST plug teaching tools.

Description	ID	Often combined
Plug teaching tool		
ST-MMS 22-PI1-PNP	0301025	
MMS PI1 programmable magnetic switches		
MMS 22-PI1-S-M8-PNP	0301160	●
MMSK 22-PI1-S-PNP	0301162	
MMS PI1-HD programmable magnetic switches with stainless steel housing		
MMS 22-PI1-S-M8-PNP-HD	0301110	●
MMSK 22-PI1-S-PNP-HD	0301112	
MMS PI1 programmable magnetic switches with lateral cable outlet		
MMS 22-PI1-S-M8-PNP-SA	0301166	●
MMSK 22-PI1-S-PNP-SA	0301168	

ⓘ Two sensors (closer/S) are required for each unit, plus extension cables as an option. Please note the minimum permitted bending radii for the sensor cables, which are generally 35 mm. Connection cable, cable extensions, and sensor distributors can be found in the table for the MMS 22.

APS-Z80 analog position sensor

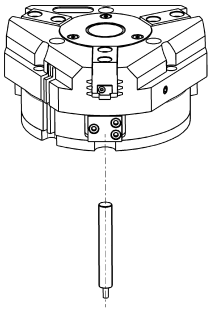

Contactlessly measuring, analog multi-position monitoring for any number of positions.

Description	ID	Often combined
Mounting kit for APS-Z80		
AS-APS-Z80-PGZN-plus 160-1/200-2/240-2	0302113	
AS-APS-Z80-PGZN-plus 240-1	0302116	
Sensor		
APS-Z80-K	0302072	
APS-Z80-M8	0302070	●

ⓘ When using an APS system, one mounting kit (AS-APS-Z80) and one APS-Z80 sensor is required per gripper.

APS-M1 analog position sensor

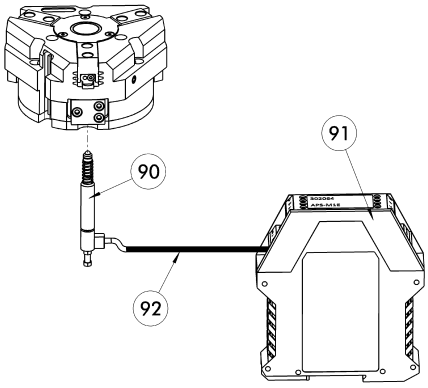

90 APS-M1S sensor
91 APS-M1E electronic processor
92 APS-K extension cable

Analog multi position monitoring for any desired positions.

Description	ID	Often combined
Mounting kit for APS-M1		
AS-APS-M1-PGZN-plus 160-1/240-2	0302083	
AS-APS-M1-PGZN-plus 240-1	0302087	
Connection cables		
APS-K0200	0302066	●
APS-K0700	0302068	
Electronic processor		
APS-M1E	0302064	
Sensor		
APS-M1S	0302062	

ⓘ When using an APS system, for each gripper a mounting kit (AS-APS-M1), an APS-M1S sensor (incl. 3 m cable) as well as an electronics (APS-M1e) are required. An extension cable (APS-K) can be connected between the sensor and the electronics as an option. The max. cable length between the sensor and the electronics is 10 m, between the electronics and their control unit (PLC) it is max. 1 m.

Cylindrical reed switches

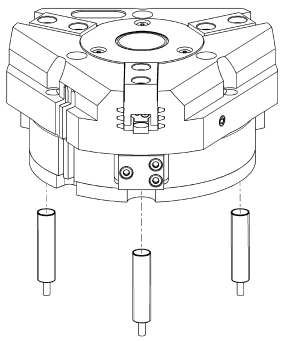

Limit position monitor can be mounted with mounting kit.

Description	ID	
Mounting kit for proximity switch		
AS-RMS 80 PGN/PZN-plus 160-380	0377727	
Reed switches		
RMS 80-S-M8	0377721	

ⓘ Two sensors (closer/S) are required for each unit, plus extension cables as an option. This mounting kit needs to be ordered optionally as an accessory. Two mounting kits are required per gripper. Please note the minimum permitted bending radii for the sensor cables, which are generally 35 mm.

PZB-plus 300

SCHUNK Grippers pneumatic | 3-Finger Centric Grippers | Universal Gripper

Gripping force, O.D. gripping

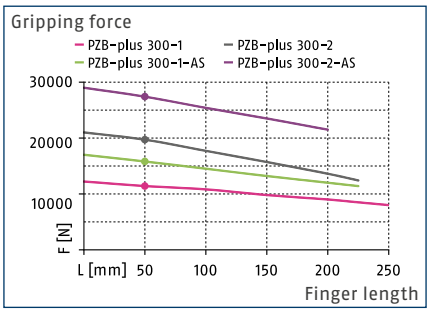

Gripping force, I.D. gripping

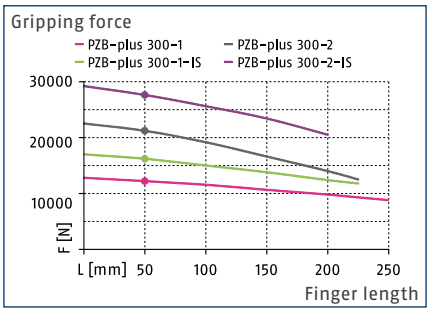

Finger load

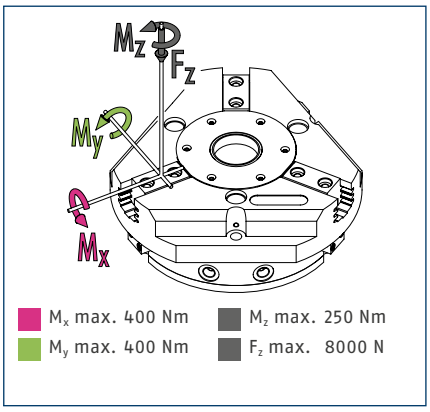

ⓘ The indicated moments and forces are static values, apply per base jaw and may occur simultaneously. M_y may arise in addition to the moment generated by the gripping force itself. If the max. permitted finger weight is exceeded, it is impreative to throttle the air supply so that the jaw movement occurs without any hitting or bouncing. Service life may be reduced.

Technical data

Description		PZB-plus 300-1	PZB-plus 300-2	PZB-plus 300-1-AS	PZB-plus 300-2-AS	PZB-plus 300-1-IS	PZB-plus 300-2-IS
ID		0304970	0304971	0304972	0304973	0304974	0304975
Stroke per jaw	[mm]	35	20	35	20	35	20
Closing- / opening force	[N]	11400/12200	19700/21200	15800/-	27400/-	-/16200	-/27600
min. spring force	[N]			4400	3600	7700	6300
Weight	[kg]	38	53	38	53	53	53
Recommended workpiece weight	[kg]	57	100	57	100	57	100
Fluid consumption per double stroke	[cm³]	2600	2600	3600	3600	4500	4500
min. / max. operating pressure	[bar]	2/8	2/8	4/6.5	4/6.5	4/6.5	4/6.5
Nominal operating pressure	[bar]	6	6	6	6	6	6
Closing- / opening time	[s]	1.3/1.3	1.3/1.3	1.2/2.5	1.2/2.5	2.5/1.2	2.5/1.2
max. permitted finger length	[mm]	250	225	225	200	225	200
max. permitted weight per finger	[kg]	11.5	11.5	11.5	11.5	11.5	11.5
IP class		40	40	40	40	40	40
min. / max. ambient temperature	[°C]	5/90	5/90	5/90	5/90	5/90	5/90
Repeat accuracy	[mm]	0.05	0.05	0.05	0.05	0.05	0.05
Diameter of center bore	[mm]	64	64	64	64	64	64

Main view

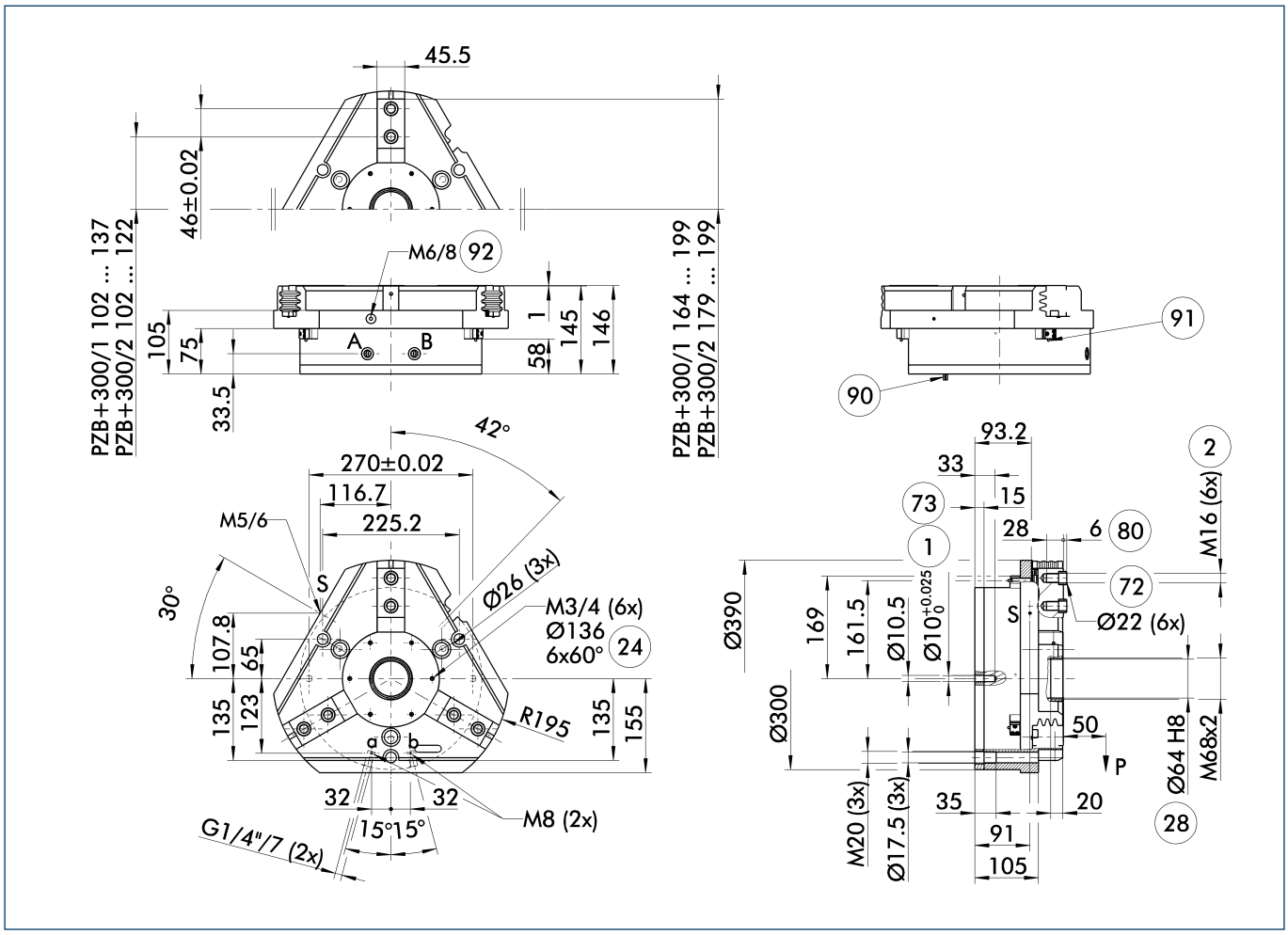

The drawing shows the gripper in the basic version with closed jaws, without dimensional consideration of the options described below.

ⓘ The SDV-P pressure maintenance valve can also be used for I.D. or O.D. gripping alternatively or in addition to the spring-loaded, mechanical gripping force maintenance device (see catalog section on "Accessories").

A, a Main / direct connection, gripper opening

B, b Main / direct connection, gripper closing

S Air purge connection (0.5 ... 1 bar)

(1) Gripper connection

(2) Finger connection

(24) Bolt circle

(28) Through-bore

(72) Fit for centering sleeves

(73) Fit for centering pins

(80) Depth of the centering sleeve hole in the mating part

(90) MMS 22... sensor

(91) IN ... sensor

(92) Lubricating nipple connection

Hose-free direct connection M8

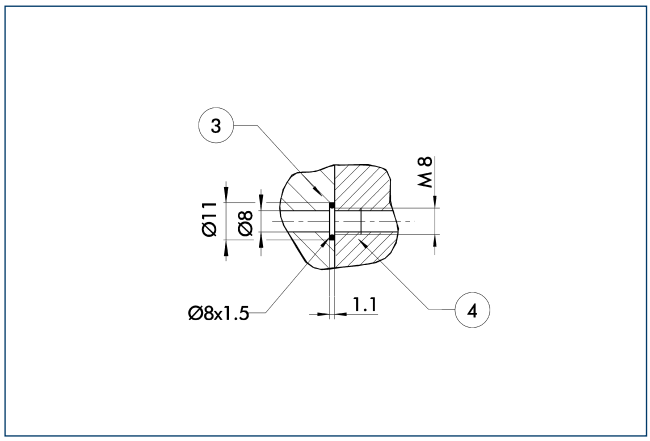

(3) Adapter (4) Gripper

The direct connection is used for supplying compressed air without hoses. Instead, the pressure medium is fed through bore-holes in the mounting plate.

Gripping force maintenance device AS / IS

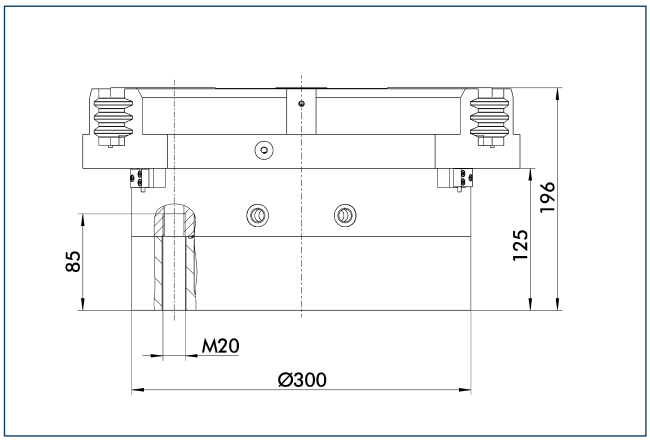

The mechanical maintenance of gripping force also assures a minimum gripping force in the case of a loss of pressure. With the AS / S variant, this acts as a closing force, and as an opening force for the IS variant. The maintenance of gripping force element can also be used as a means for increasing gripping force or for single actuated gripping.

Spring-loaded pressure piece

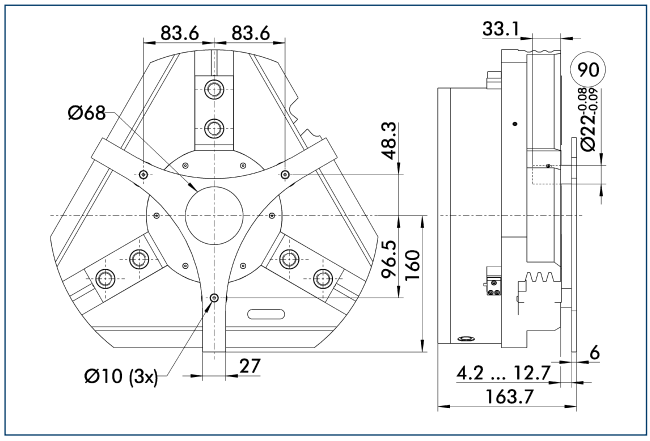

(90) Guide pin

For spring-supported positioning of the workpiece against a stop after the gripper has opened. Especially developed for loading machines.

Description	ID	Stroke [mm]	Min. force [N]
Spring-loaded pressure piece			
A-PZB-plus 300	0304976	8.5	240

ⓘ The spring-load pressure piece option can be assambled on a modified PZB-plus, please contact us for further information.

SDV-P pressure maintenance valve

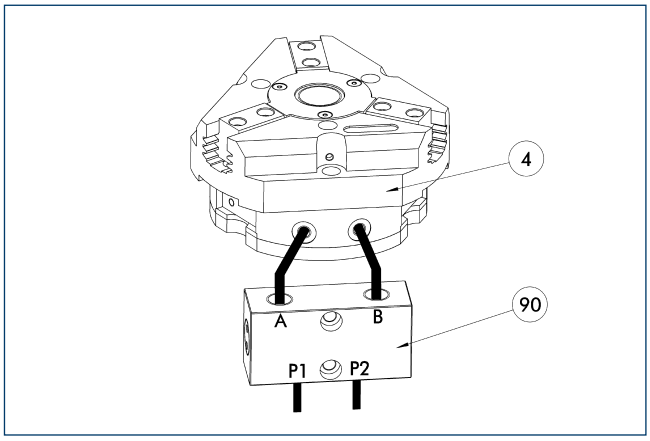

(4) Gripper (90) SDV-P pressure maintenance valve

The SDV-P pressure maintenance valves ensure that the pressure in the piston chamber of pneumatic gripping, rotary, linear, and quick-change modules is maintained temporarily during an emergency stop.

Description	ID	
Pressure maintenance valve		
SDV-P 10	0300108	

FMS-ZBA / ZBP 300 force-measuring jaws

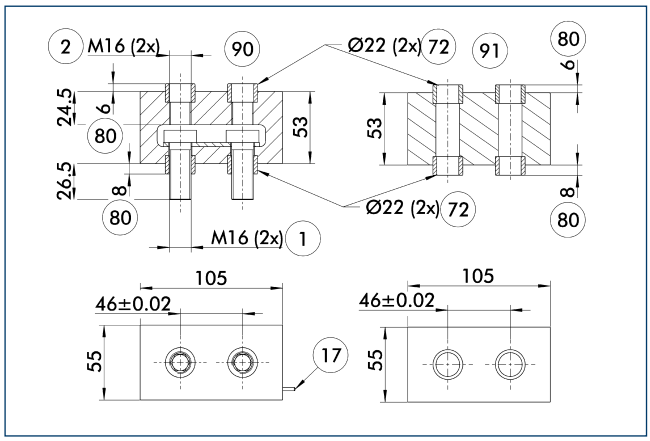

1 Gripper connection
2 Finger connection
17 Cable outlet
72 Fit for centering sleeves
80 Depth of the centering sleeve hole in the mating part
90 Active intermediate jaws
91 Passive intermediate jaws

Force measuring jaws measure gripping forces, but can also determine workpiece weights or dimensional deviations. There are active and passive intermediate jaws (FMS-ZBA or FMS-ZBP). At least one active force measuring jaw is required per gripper, the rest can be passive. For each active jaw, a FMS-A control unit and a FMS-AK connection cable are required.

Description	ID	Often combined
Active intermediate jaws		
FMS-ZBA 300	0301846	
Passive intermediate jaws		
FMS-ZBP 300	0301847	
Connection cables		
FMS-AK0200	0301820	●
FMS-AK0500	0301821	
FMS-AK1000	0301822	
FMS-AK2000	0301823	
Electronic processor		
FMS-A2	0301811	

ABR- / SBR-PGZN-plus 300 finger blanks

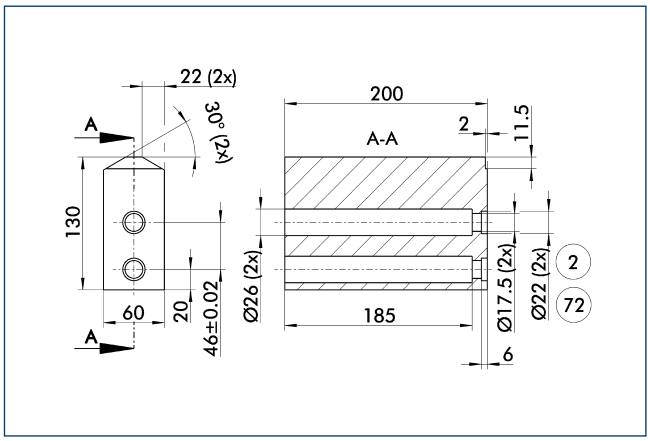

2 Finger connection
72 Fit for centering sleeves

Finger blanks for customized subsequent machining.

Description	ID	Material	Scope of delivery
Finger blanks			
ABR-PGZN-plus 300	0300016	Aluminum	1
SBR-PGZN-plus 300	0300026	16MnCr5	1

Inductive proximity switches

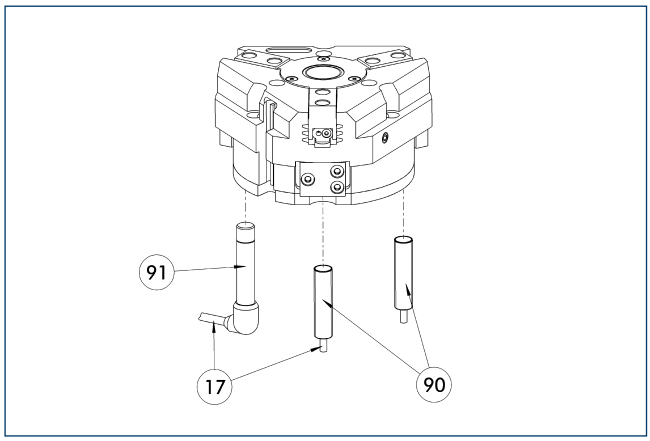

(17) Cable outlet
(90) IN ... sensor
(91) IN ...-SA sensor

Directly mounted limit position monitor.

Description	ID	Often combined
Inductive proximity switches		
IN 80-S-M12	0301578	
IN 80-S-M8	0301478	●
INK 80-S	0301550	
Cable extensions		
KV BG12-SG12 3P-0030-PNP	0301999	
KV BG12-SG12 3P-0060-PNP	0301998	
KV BW08-SG08 3P-0030-PNP	0301495	
KV BW08-SG08 3P-0100-PNP	0301496	
KV BW08-SG08 3P-0200-PNP	0301497	●
KV BW12-SG12 3P-0030-PNP	0301595	
KV BW12-SG12 3P-0100-PNP	0301596	
KV BW12-SG12 3P-0200-PNP	0301597	
Clip for plug / socket		
CLI-M12	0301464	
CLI-M8	0301463	
Connection cables		
KA BG08-L 3P-0300-PNP	0301622	●
KA BG08-L 3P-0500-PNP	0301623	
KA BG12-L 3P-0500-PNP	30016369	
KA BW08-L 3P-0300-PNP	0301594	
KA BW08-L 3P-0500-PNP	0301502	
KA BW12-L 3P-0300-PNP	0301503	
KA BW12-L 3P-0500-PNP	0301507	
Sensor distributor		
V2-M8	0301775	●
V2-M12	0301776	●
V4-M12	0301747	
V4-M8	0301746	
V8-M12	0301752	
V8-M8	0301751	

ⓘ Two sensors (closer/S) are required for each unit, plus extension cables as an option. Please note the minimum permitted bending radii for the sensor cables, which are generally 35 mm.

Flexible position sensor

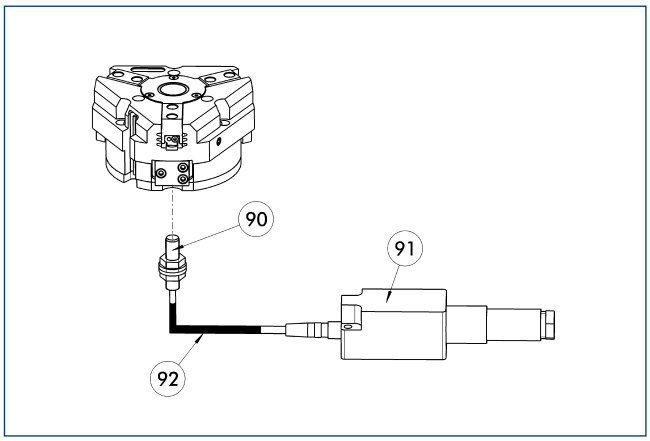

(90) FPS-S sensor
(91) FPS-F5 / -F5 T electronic processor
(92) Cable extensions

Flexible position monitoring of up to five positions.

Description	ID	Often combined
Mounting kit for FPS		
AS-FPS-PGZN-plus 300-2	0301642	
Electronic processor		
FPS-F5	0301805	●
FPS-F5 T	0301807	
Sensor		
FPS-S M8	0301704	
Clip for plug / socket		
CLI-M8	0301463	

ⓘ When using a FPS system, a FPS sensor (FPS-S) and a control unit (FPS-F5 / F5 T) are required for each gripper as well as a mounting kit (AS), if listed. Cable extensions (KV) are available as options in the "Accessories" catalog section.

MMS electronic magnetic switches

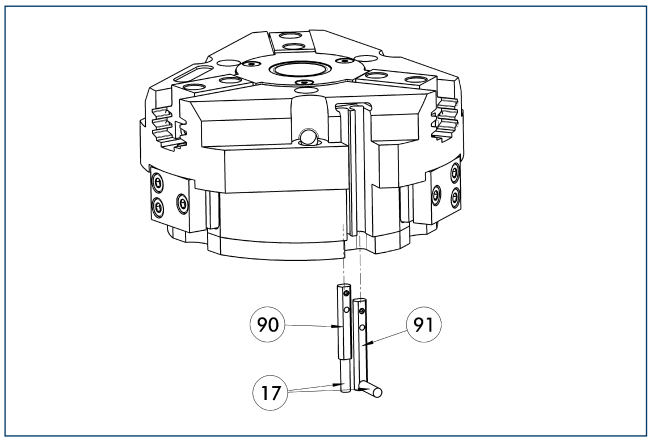

(17) Cable outlet
(91) MMS 22...-SA sensor
(90) MMS 22... sensor

End position monitoring for mounting in the C-slot.

Description	ID	Often combined
MMS electronic magnetic switches		
MMS 22-S-M8-PNP	0301032	●
MMSK 22-S-PNP	0301034	
MMS electronic magnetic switches with lateral cable outlet		
MMS 22-S-M8-PNP-SA	0301042	●
MMSK 22-S-PNP-SA	0301044	
Reed switches		
RMS 22-S-M8	0377720	●
Cable extensions		
KV BW08-SG08 3P-0030-PNP	0301495	
KV BW08-SG08 3P-0100-PNP	0301496	
KV BW08-SG08 3P-0200-PNP	0301497	●
Clip for plug / socket		
CLI-M8	0301463	
Connection cables		
KA BG08-L 3P-0300-PNP	0301622	●
KA BG08-L 3P-0500-PNP	0301623	
KA BW08-L 3P-0300-PNP	0301594	
KA BW08-L 3P-0500-PNP	0301502	
RSS radio sensor system		
RSS-T2	0377710	
Sensor distributor		
V2-M8	0301775	●
V4-M8	0301746	
V8-M8	0301751	

ⓘ Two sensors (closer/S) are required for each unit, plus extension cables as an option. Please note the minimum permitted bending radii for the sensor cables, which are generally 35 mm.

MMS PI1 programmable magnetic switches

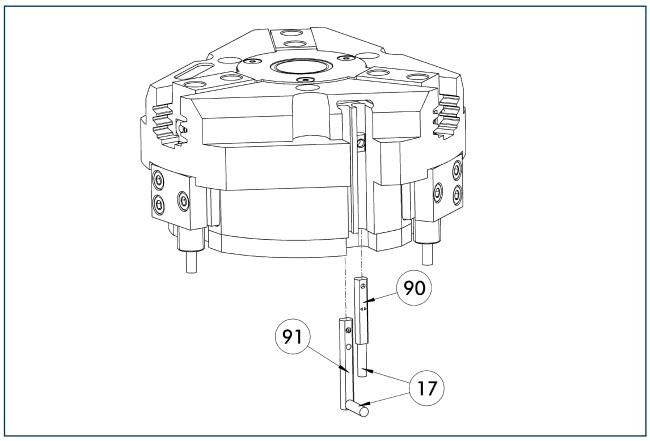

(17) Cable outlet
(91) MMS 22...-PI1-...-SA sensor
(90) MMS 22...-PI1-... sensor

Position query with one programmable position per sensor and electronics integrated in sensor. Programmable via MT magnet teaching tool (included in the scope of delivery) or ST plug teaching tool (optional). Limit position query mounted in C-groove. If the ST plug teaching tools are listed in the table, teaching can only take place with the ST plug teaching tools.

Description	ID	Often combined
MMS PI1 programmable magnetic switches		
MMS 22-PI1-S-M8-PNP	0301160	●
MMSK 22-PI1-S-PNP	0301162	
MMS PI1-HD programmable magnetic switches with stainless steel housing		
MMS 22-PI1-S-M8-PNP-HD	0301110	●
MMSK 22-PI1-S-PNP-HD	0301112	
MMS PI1 programmable magnetic switches with lateral cable outlet		
MMS 22-PI1-S-M8-PNP-SA	0301166	●
MMSK 22-PI1-S-PNP-SA	0301168	

ⓘ Two sensors (closer/S) are required for each unit, plus extension cables as an option. Please note the minimum permitted bending radii for the sensor cables, which are generally 35 mm.

APS-Z80 analog position sensor

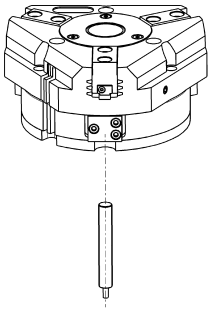

Contactlessly measuring, analog multi-position monitoring for any number of positions.

Description	ID	Often combined
Mounting kit for APS-Z80		
AS-APS-Z80-PGZN-plus 300-1	0302117	
AS-APS-Z80-PGZN-plus 300-2	0302118	
Sensor		
APS-Z80-K	0302072	
APS-Z80-M8	0302070	●

ⓘ When using an APS system, one mounting kit (AS-APS-Z80) and one APS-Z80 sensor is required per gripper.

APS-M1 analog position sensor

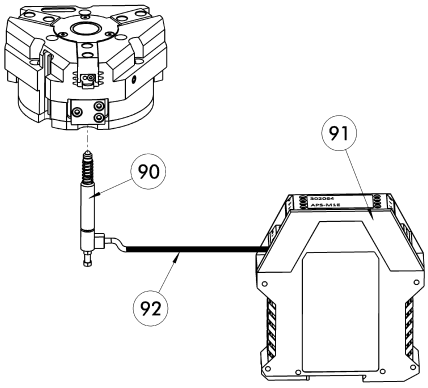

(90) APS-M1S sensor
(91) APS-M1E electronic processor
(92) APS-K extension cable

Analog multi position monitoring for any desired positions.

Description	ID	Often combined
Mounting kit for APS-M1		
AS-APS-M1-PGZN-plus 300-1	0302088	
AS-APS-M1-PGZN-plus 300-2	0302089	
Connection cables		
APS-K0200	0302066	●
APS-K0700	0302068	
Electronic processor		
APS-M1E	0302064	
Sensor		
APS-M1S	0302062	

ⓘ When using an APS system, for each gripper a mounting kit (AS-APS-M1), an APS-M1S sensor (incl. 3 m cable) as well as an electronics (APS-M1e) are required. An extension cable (APS-K) can be connected between the sensor and the electronics as an option. The max. cable length between the sensor and the electronics is 10 m, between the electronics and their control unit (PLC) it is max. 1 m.

Cylindrical reed switches

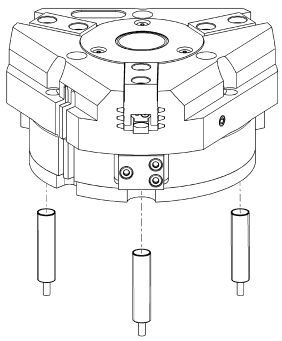

Limit position monitor can be mounted with mounting kit.

Description	ID	
Mounting kit for proximity switch		
AS-RMS 80 PGN/PZN-plus 160-380	0377727	
Reed switches		
RMS 80-S-M8	0377721	

ⓘ Two sensors (closer/S) are required for each unit, plus extension cables as an option. This mounting kit needs to be ordered optionally as an accessory. Two mounting kits are required per gripper. Please note the minimum permitted bending radii for the sensor cables, which are generally 35 mm.

Flexible. Compact. Fully encapsulated.

PZH-SF-mini Swivel Finger Gripper

Universal 3-finger centric gripper with large, rotating jaw stroke for a large spectrum of parts and dirt-resistant circular guides

Field of Application

Clean to slightly dirty environments

Advantages – Your benefit

Low-wear taper spindle for a large stroke for a large workpiece size range or for gripping in an undercut section

Direct Drive for high power transmission and synchronized gripping

Base jaws with a flange connection for customized jaw attachment

Universally applicable for internal and external gripping

Comprehensive sensor accessory program for versatile interrogation possibilities and control of stroke position

Sizes	Weight	Gripping moment	Angle per jaw	Workpiece weight
Quantity: 1	3.3 kg	70 Nm	100°	9.8 kg

Functional Description

The drive piston moves in the vertical direction when pressure is applied. This also moves the ball screw nuts vertically. In addition to power transmission to the taper spindle, the ball screw nuts also synchronize the base jaw.

① **Rotary flange**
for the connection of workpiece-specific gripper fingers

② **Dust cover**
for the use in dirty environment

③ **Drive**
Double acting pneumatic piston

④ **Bearing**
High-precision bearing seat due to the use of high-quality rolling bearings

⑤ **Steep-threaded spindle**
for translating the linear piston movement into the rotatory finger movement

⑥ **Spindle nut**
for high power transmission and centric gripping

CAD data, operating manuals and other current product documents are available at **www.schunk.com**

General Notes about the Series

Operating principle: Double-acting piston with high helix transmission

Housing material: hard-anodized, high strength aluminum

Base jaw material: Steel

Actuation: pneumatic, with filtered compressed air as per DIN ISO 8573-1: 7 4 4

Warranty: 24 months (details, general terms and conditions and operating manuals can be downloaded at www.schunk.com)

Scope of delivery: O-rings for direct connection, assembly and operating manual with manufacturer's declaration

Gripping force maintenance device: possible with SDV-P pressure maintenance valve

Gripping moment: gripping moment is the arithmetic total of gripping moments for each claw jaw.

Finger length: is measured from the upper edge of the gripper housing in direction to the main axis. If the max. admissible finger length is exceeded, the speed of jaw motions have to be reduced and / or the opening angle has to be diminished, as it is done with heavy fingers. The service life of the gripper can shorten.

Repeat accuracy: is defined as the spread of the limit position after 100 consecutive strokes.

Workpiece weight: is calculated for a friction grip using a coefficient of friction of 0.1, the given finger length and workpiece dimension and a safety factor of 2 to prevent against workpiece slippage due to gravity. Considerably heavier workpiece weights are permitted when using form-fitted fingers.

Closing and opening times: are purely the times that the base jaws or fingers are in motion. Valve switching times, hose filling times or PLC reaction times are not included in the above times and must be taken into consideration when determining cycle times.

Application example

1. PZH-SF 125 3-Finger Centric Gripper
2. TCU Tolerance Compensation Unit
3. DDF 2 Rotary Feed-through

SCHUNK offers more ...

The following components make the product PZH-SF-mini even more productive – the suitable addition for the highest functionality, flexibility, reliability, and controlled production.

Magnetic Switches

Inductive Proximity Switches

Tolerance Compensation Unit

Compensation Unit

Sensor Distributor

SDV-P Pressure Maintenance Valve

Sensor Cables

Fittings

ⓘ Further information regarding the products can be found on the following product pages or at www.schunk.com. Please contact us for further information: SCHUNK technical hotline +49-7133-103-2696

Options and special Information

Workpiece dimensions and workpiece weights: The workpiece dimensions and workpiece weights which can be gripped can be directly influenced with the base jaw lengths based on the required gripping forces and jaw strokes. The result is the ideal gripper for nearly every application. We would be happy to assist you.

PZH-SF-mini 125

SCHUNK Grippers pneumatic | 3-Finger Centric Grippers | Swivel Finger Gripper

Gripping force, O.D. gripping

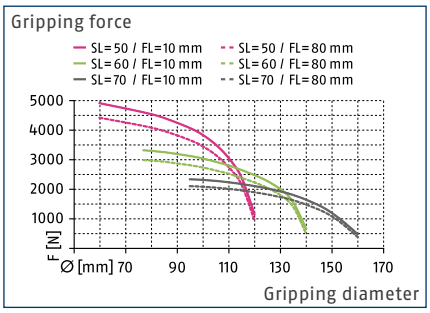

Gripping force, I.D. gripping

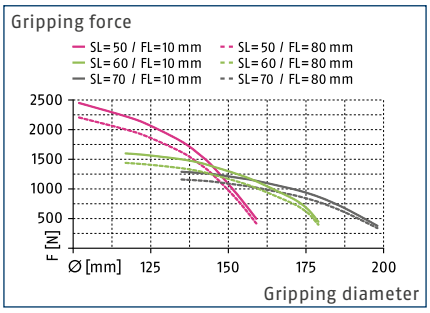

Finger load

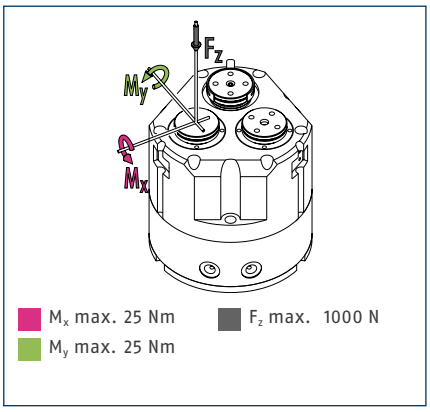

ⓘ The indicated moments and forces are static values, apply per base jaw and may occur simultaneously. M_y may arise in addition to the moment generated by the gripping force itself. If the max. permitted finger weight is exceeded, it is impreative to throttle the air supply so that the jaw movement occurs without any hitting or bouncing. Service life may be reduced.

Technical data

Description		PZH-SF 125
ID		0370410
Opening angle per jaw	[°]	100
Closing moment	[Nm]	70
Opening moment	[Nm]	75
Weight	[kg]	3.3
Recommended workpiece weight*	[kg]	9.8
Fluid consumption per double stroke	[cm³]	390
min. / max. operating pressure	[bar]	2/6.5
Nominal operating pressure	[bar]	6
Closing- / opening time	[s]	0.5/0.5
max. permitted finger length	[mm]	80
max. permitted weight per finger	[kg]	1
IP class		64
min. / max. ambient temperature	[°C]	5/90
Repeat accuracy	[mm]	0.05

*The recommended workpiece weight is calculated for force-fit gripping with a coefficient of static friction of 0.1 of the specified base jaw length of 50 mm and workpiece dimension of 125 mm, and a safety factor of 2 against workpiece slippage at acceleration due to gravity g. Considerably heavier workpiece weights are permitted when using form-fitted fingers.

ⓘ The gripping force is determined based on the swing length (SL), the gripped workpiece diameter, and the finger length (FL). The finger length is measured from the top edge of the housing to the gripping force application point.

Main view

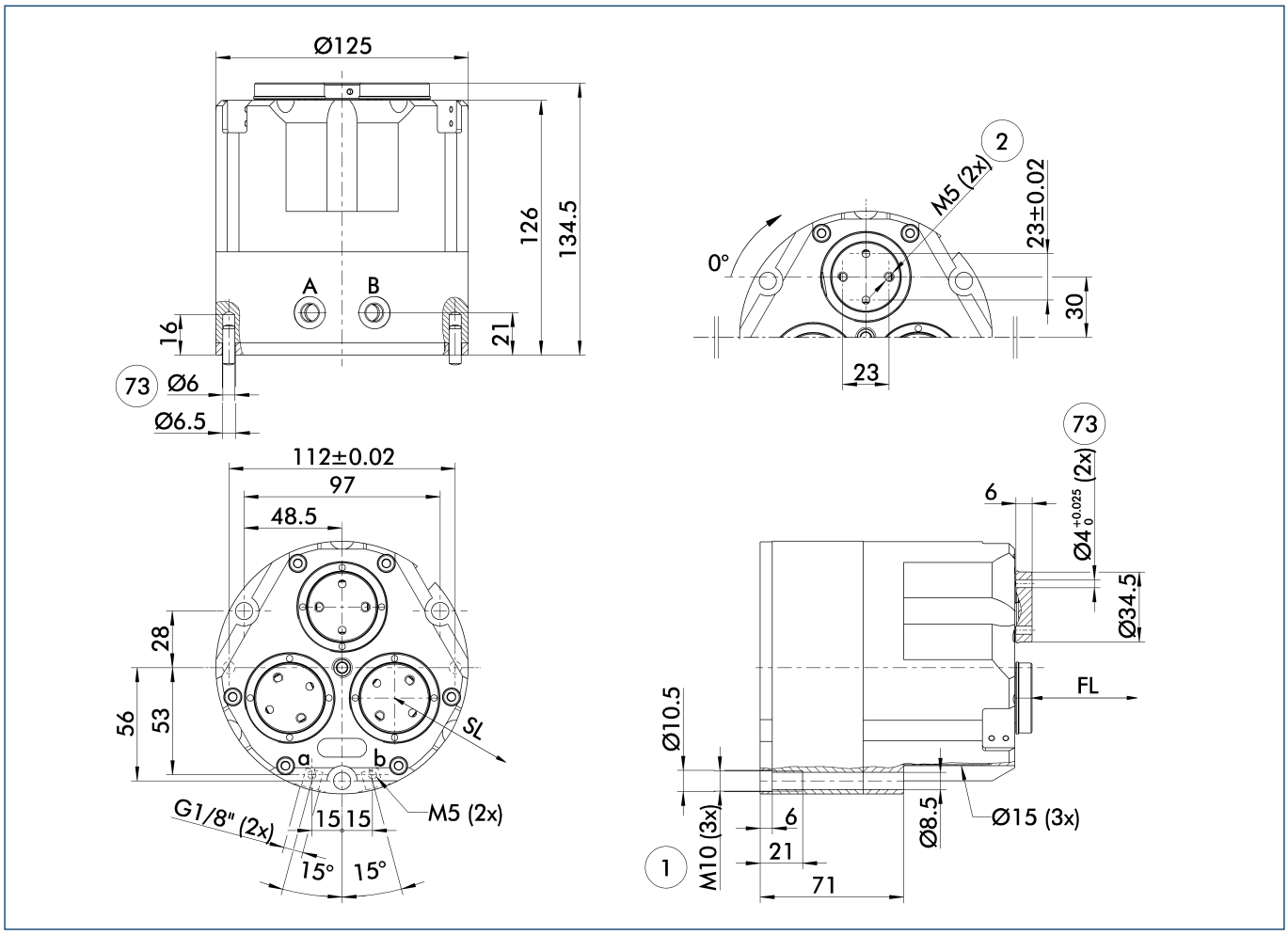

The drawing shows the basic version of the gripper without dimensional consideration of the options described below.

ⓘ The SDV-P pressure maintenance valve can be used as a gripping force maintenance device (see catalog section on "Accessories").

A, a Main / direct connection, gripper opening

B, b Main / direct connection, gripper closing

(1) Gripper connection
(2) Finger connection
(73) Fit for centering pins

Hose-free direct connection M5

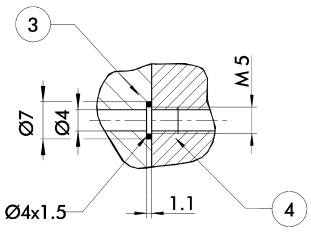

3 Adapter

4 Gripper

The direct connection is used for supplying compressed air without hoses. Instead, the pressure medium is fed through bore-holes in the mounting plate.

Mounting kit for IN 80 proximity switches

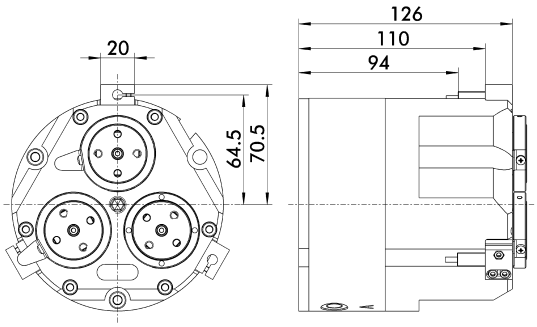

The mounting kit consists of brackets, control cams and appropriate fastening materials. Proximity switches have to be ordered separately.

Description	ID	
Mounting kit for proximity switch		
AS-PZH-SF 125-IN80	0370415	

ⓘ This mounting kit needs to be ordered optionally as an accessory.

Inductive proximity switches

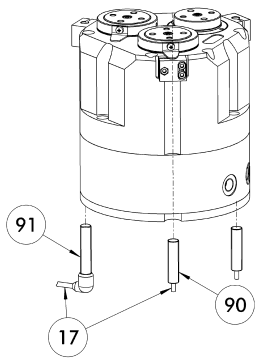

(17) Cable outlet
(91) IN ...-SA sensor
(90) IN ... sensor

Limit position monitor can be mounted with mounting kit.

Description	ID	Often combined
Mounting kit for proximity switch		
AS-PZH-SF 125-IN80	0370415	
Inductive proximity switches		
IN 80-S-M12	0301578	
IN 80-S-M8	0301478	●
INK 80-S	0301550	
Inductive proximity switches with lateral outlet		
IN 80-S-M12-SA	0301587	
IN 80-S-M8-SA	0301483	●
INK 80-S-SA	0301566	
Cable extensions		
KV BG12-SG12 3P-0030-PNP	0301999	
KV BG12-SG12 3P-0060-PNP	0301998	
KV BW08-SG08 3P-0030-PNP	0301495	
KV BW08-SG08 3P-0100-PNP	0301496	
KV BW08-SG08 3P-0200-PNP	0301497	●
KV BW12-SG12 3P-0030-PNP	0301595	
KV BW12-SG12 3P-0100-PNP	0301596	
KV BW12-SG12 3P-0200-PNP	0301597	
Clip for plug / socket		
CLI-M12	0301464	
CLI-M8	0301463	
Connection cables		
KA BG08-L 3P-0300-PNP	0301622	●
KA BG08-L 3P-0500-PNP	0301623	
KA BG12-L 3P-0500-PNP	30016369	
KA BW08-L 3P-0300-PNP	0301594	
KA BW08-L 3P-0500-PNP	0301502	
KA BW12-L 3P-0300-PNP	0301503	
KA BW12-L 3P-0500-PNP	0301507	
Sensor distributor		
V2-M8	0301775	●
V2-M12	0301776	●

ⓘ Two sensors (closer/S) are required for each unit, plus extension cables as an option. This mounting kit needs to be ordered optionally as an accessory. Please note the minimum permitted bending radii for the sensor cables, which are generally 35 mm.

MMS electronic magnetic switches

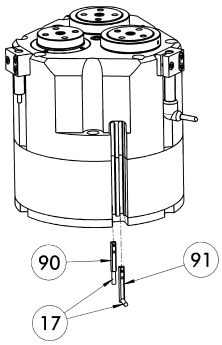

(17) Cable outlet
(91) MMS 22...-SA sensor
(90) MMS 22... sensor

End position monitoring for mounting in the C-slot.

Description	ID	Often combined
MMS electronic magnetic switches		
MMS 22-S-M8-PNP	0301032	●
MMSK 22-S-PNP	0301034	
MMS electronic magnetic switches with lateral cable outlet		
MMS 22-S-M8-PNP-SA	0301042	●
MMSK 22-S-PNP-SA	0301044	
Cable extensions		
KV BW08-SG08 3P-0030-PNP	0301495	
KV BW08-SG08 3P-0100-PNP	0301496	
KV BW08-SG08 3P-0200-PNP	0301497	●
Clip for plug / socket		
CLI-M8	0301463	
Connection cables		
KA BG08-L 3P-0300-PNP	0301622	●
KA BG08-L 3P-0500-PNP	0301623	
KA BW08-L 3P-0300-PNP	0301594	
KA BW08-L 3P-0500-PNP	0301502	
Sensor distributor		
V2-M8	0301775	●
V4-M8	0301746	
V8-M8	0301751	

ⓘ Two sensors (closer/S) are required for each unit, plus extension cables as an option. Please note the minimum permitted bending radii for the sensor cables, which are generally 35 mm.

MMS PI1 programmable magnetic switches

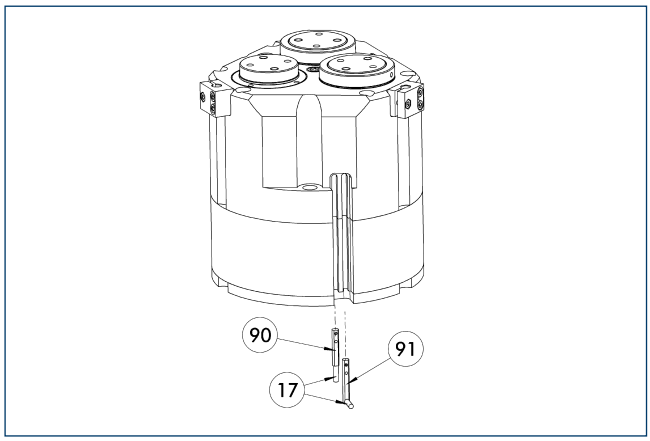

(17) Cable outlet
(91) MMS 22...-PI1-...-SA sensor
(90) MMS 22...-PI1-... sensor

Position query with one programmable position per sensor and electronics integrated in sensor. Programmable via MT magnet teaching tool (included in the scope of delivery) or ST plug teaching tool (optional). Limit position query mounted in C-groove. If the ST plug teaching tools are listed in the table, teaching can only take place with the ST plug teaching tools.

Description	ID	Often combined
MMS PI1 programmable magnetic switches		
MMS 22-PI1-S-M8-PNP	0301160	●
MMSK 22-PI1-S-PNP	0301162	
MMS PI1-HD programmable magnetic switches with stainless steel housing		
MMS 22-PI1-S-M8-PNP-HD	0301110	●
MMSK 22-PI1-S-PNP-HD	0301112	
MMS PI1 programmable magnetic switches with lateral cable outlet		
MMS 22-PI1-S-M8-PNP-SA	0301166	●
MMSK 22-PI1-S-PNP-SA	0301168	

ⓘ Two sensors (closer/S) are required for each unit, plus extension cables as an option. Please note the minimum permitted bending radii for the sensor cables, which are generally 35 mm. Connection cable, cable extensions, and sensor distributors can be found in the table for the MMS 22.

MMS-P programmable magnetic switches

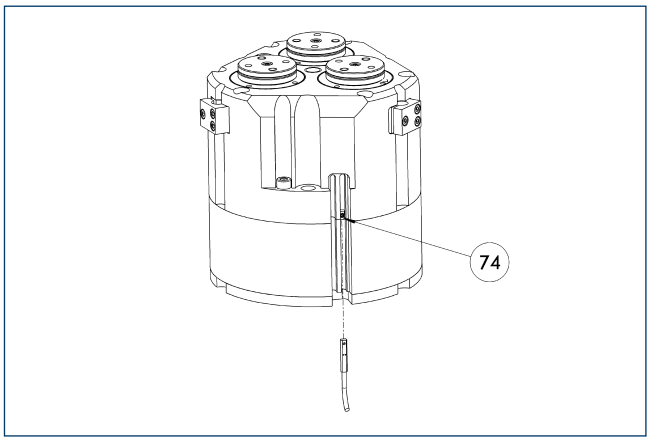

(74) Stop for MMS-P

Position monitoring with two programmable positions per sensor. The end position monitoring is mounted in the C-slot.

Description	ID	Often combined
MMS-P programmable magnetic switches		
MMSK-P 22-S-PNP	0301371	
MMS-P 22-S-M8-PNP	0301370	●
Clip for plug / socket		
CLI-M8	0301463	
Connection cables		
KA BG08-L 4P-0500	0307767	●
KA BG08-L 4P-1000	0307768	
KA BW08-L 4P-0500	0307765	
KA BW08-L 4P-1000	0307766	
Sensor distributor		
V2-M8-4P-2XM8-3P	0301380	

ⓘ Per unit one sensor (closer/S) is required, optionally a cable extension. Please note the minimum permitted bending radii for the sensor cables, which are generally 35 mm.

Flat. Flexible. Fully encapsulated.

PZH-SF Swivel Finger Gripper

Universal 3-finger centric gripper with large, rotating jaw stroke for a large spectrum of parts and dirt-resistant circular guides

Field of Application

Clean to slightly dirty working environments, especially suitable for the handling of car rims

Advantages – Your benefit

Swiveling Finger for a large stroke for a large workpiece size range or for gripping in an undercut section

Rack and pinion principle for high power transmission and synchronized gripping

Simple jaw connection for customized jaw attachment

Universally applicable for internal and external gripping

Comprehensive sensor accessory program for versatile interrogation possibilities and control of stroke position

Available for standard robot adaptations according to ISO 9409

Sizes	Weight	Gripping moment	Angle per jaw	Workpiece weight
Quantity: 1	20 kg	182 Nm	59.7°	8 kg

Functional Description

With the application of pressure of the opposite piston, toothed segments connected to the base jaws are driven via the rack and pinion principle. The synchronisation of the base jaws also take place in this manner.

① **Base jaws**
for the connection of workpiece-specific gripper fingers

② **Drive principle of pinions and racks**
for high power transmission and centric gripping

③ **Housing**
Weight-optimized through application of high-strength aluminum alloy

④ **Robust bearing**
for precise gripping with minimal play at a high load capacity

CAD data, operating manuals and other current product documents are available at **www.schunk.com**

General Notes about the Series

Operating principle: double acting piston with gear drive

Housing material: hard-anodized, high strength aluminum

Base jaw material: Aluminum alloy, anodized

Actuation: pneumatic, with filtered compressed air as per DIN ISO 8573-1: 7 4 4

Warranty: 24 months (details, general terms and conditions and operating manuals can be downloaded at www.schunk.com)

Scope of delivery: Assembly and operating manual with manufacturer's declaration

Gripping force maintenance device: possible with SDV-P pressure maintenance valve

Gripping moment: gripping moment is the arithmetic total of gripping moments for each claw jaw.

Finger length: is measured from the upper edge of the gripper housing in direction to the main axis. If the max. admissible finger length is exceeded, the speed of jaw motions have to be reduced and / or the opening angle has to be diminished, as it is done with heavy fingers. The service life of the gripper can shorten.

Repeat accuracy: is defined as the spread of the limit position after 100 consecutive strokes.

Workpiece weight: is calculated for a friction grip using a coefficient of friction of 0.1, the given finger length and workpiece dimension and a safety factor of 2 to prevent against workpiece slippage due to gravity. Considerably heavier workpiece weights are permitted when using form-fitted fingers.

Closing and opening times: are purely the times that the base jaws or fingers are in motion. Valve switching times, hose filling times or PLC reaction times are not included in the above times and must be taken into consideration when determining cycle times.

Application example

Gripping application with line gantry comprising linear modules and centric grippers for the handling of flat, round workpieces.

1. PZH-SF 350 3-Finger Centric Gripper
2. Gamma Gantry Linear Module
3. Gamma Gantry Linear Module

SCHUNK offers more ...

The following components make the product PZH-SF even more productive – the suitable addition for the highest functionality, flexibility, reliability, and controlled production.

Magnetic Switches

Inductive Proximity Switches

Sensor Cables

Sensor Distributor

SDV-P Pressure Maintenance Valve

Fittings

ⓘ Further information regarding the products can be found on the following product pages or at www.schunk.com. Please contact us for further information: SCHUNK technical hotline +49-7133-103-2696

Options and special Information

Workpiece dimensions and workpiece weights: The gripper can be adapted to the workpiece spectrum with programmable gripper jaw settings. In addition, various base jaw lengths and finger diameters can be adapted based on the required gripping forces and workpiece dimensions to be gripped. Please contact us in this case.

PZH-SF 350

SCHUNK Grippers pneumatic | 3-Finger Centric Grippers | Swivel Finger Gripper

Gripping force, O.D. gripping

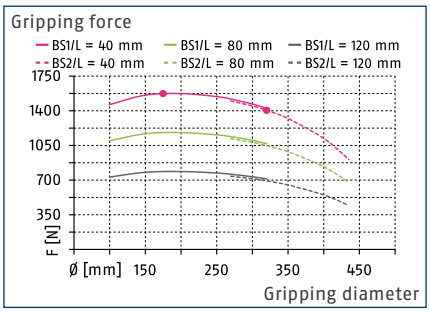

Gripping force, I.D. gripping

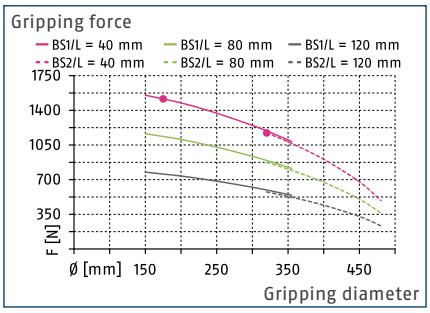

Finger load

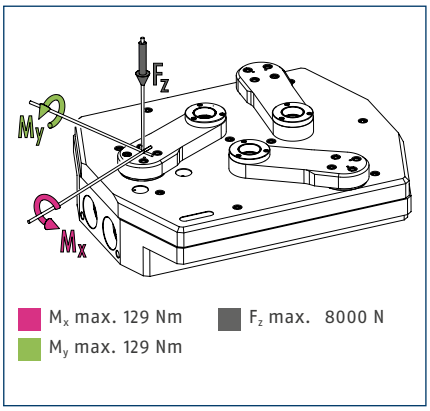

ⓘ The indicated moments and forces are statical values, apply for each base jaw and should not appear simultaneously. If the max. permitted finger weight is exceeded, it is impreative to throttle the air supply so that the jaw movement occurs without any hitting or bouncing. Service life may be reduced.

Technical data

Description		PZH-SF 350
ID		0300570
Closing- / opening force	[N]	1575/1515
Opening angle per jaw	[°]	59.7
Closing moment	[Nm]	182
Opening moment	[Nm]	175
Weight	[kg]	20
Recommended workpiece weight*	[kg]	8
Fluid consumption per double stroke	[cm³]	675
min. / max. operating pressure	[bar]	2.5/9
Nominal operating pressure	[bar]	6
Closing- / opening time	[s]	0.5/0.5
max. permitted finger length	[mm]	140
max. permitted weight per finger	[kg]	1.5
IP class		40
min. / max. ambient temperature	[°C]	5/90

*The recommended workpiece weight is calculated for a friction grip using a coefficient of friction of 0.1, a reasonable finger length of 116 mm, a workpiece dimension of 175 mm and a safety factor of 2 to prevent against workpiece slippage due to gravity. Considerably heavier workpiece weights are permitted when using form-fitted fingers.
The gripping force can be seen as a function of the base jaw position (BS1 / BS2), the gripped workpiece diameter and the finger length, L. The finger length is measured from the top of the gripper housing to the gripping force application point.

ⓘ The gripping force can be seen as a function of the base jaw position (BS1 / BS2), the gripped workpiece diameter and the finger length, L. The finger length is measured from the top of the gripper housing to the gripping force application point.

Main view

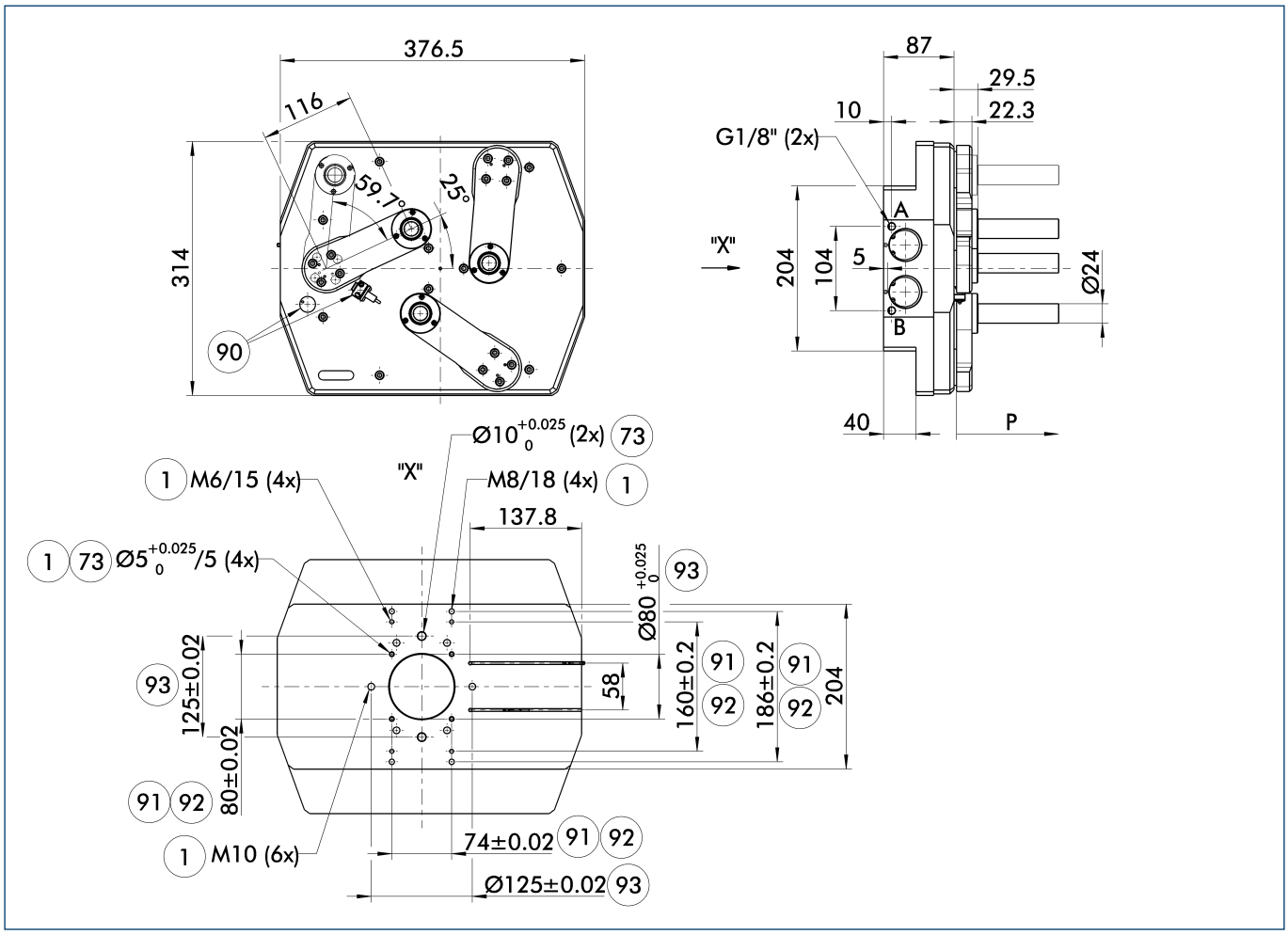

The drawing shows the basic version of the gripper without dimensional consideration of the options described below.

ⓘ The SDV-P pressure maintenance valve can be used as a gripping force maintenance device (see catalog section on "Accessories").

A, a Main / direct connection, gripper opening

B, b Main / direct connection, gripper closing

(1) Gripper connection

(73) Fit for centering pins

(90) Mounting for optional inductive sensors

(91) For direct mounting to an ISO 9409-1-A-125 flange

(92) For direct mounting to an ISO 9409-1-A-160 flange

(93) ISO 9409-1-125-6-M12

Position of base jaws

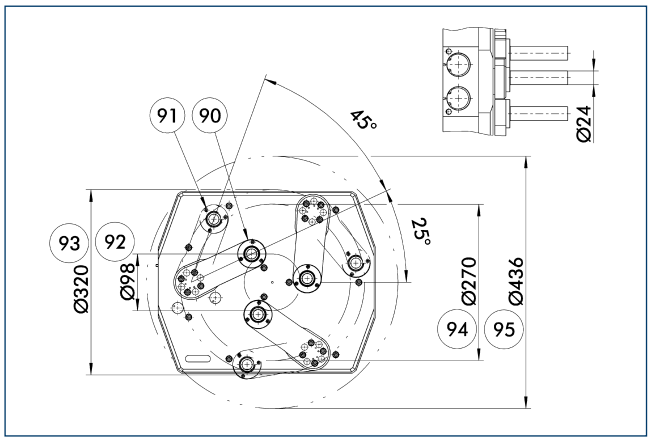

90 Jaw position BS1
91 Jaw position BS2
92 Minimal gripping diameter with jaw position BS1
93 Maximum gripping diameter with jaw position BS1
94 Minimum gripping diameter with jaw position BS2
95 Maximal gripping diameter with jaw position BS2

The base jaws can be indexed 45° with respect to the starting position. The specified diameters are valid for external gripping of workpieces. Internal gripping diameters can be determined accordingly. In addition, different base jaw lengths and finger diameters with respect to the required grip force and workpiece dimensions can be adapted. We can assist you with questions.

Finger design

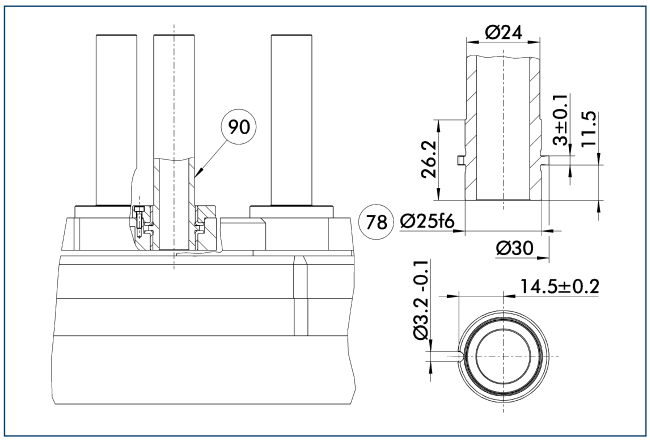

78 Fitting for centering
90 Interface for connecting customized fingers

The gripper comes delivered with the fingers as shown in the drawing. Custom specific fingers can be easily integrated or supplied. The finger interface should be designed as shown in the drawing. We can assist you with the finger design.

Adapter flange according to ISO-9409-1-125

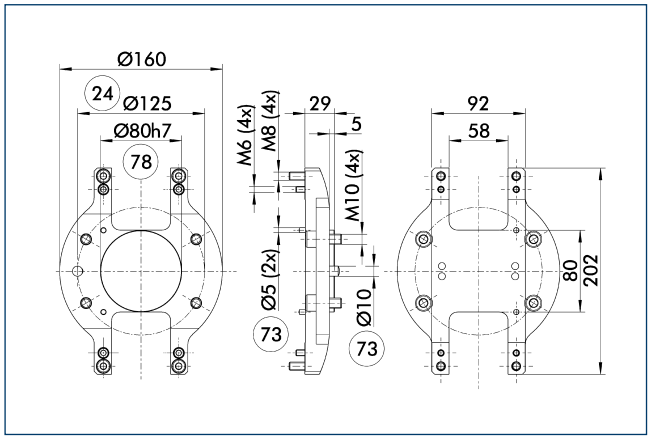

24 Bolt circle
73 Fit for centering pins
78 Fitting for centering

Description	ID	
ISO flanges		
ADF 125	0308093	

Adapter flange according to ISO-9409-1-160

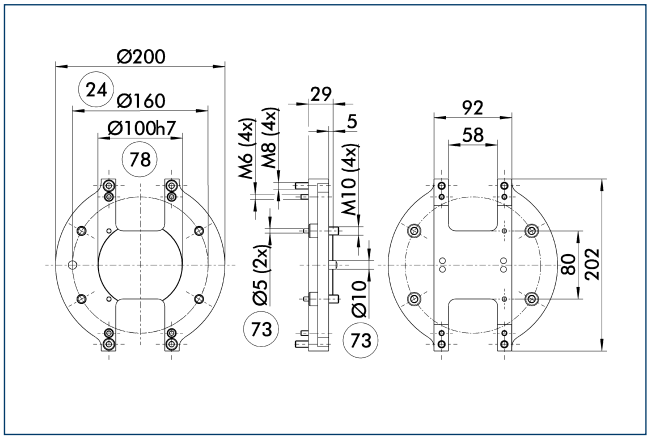

24 Bolt circle
73 Fit for centering pins
78 Fitting for centering

Description	ID	
ISO flanges		
ADF 160	0308094	

Adapter plate

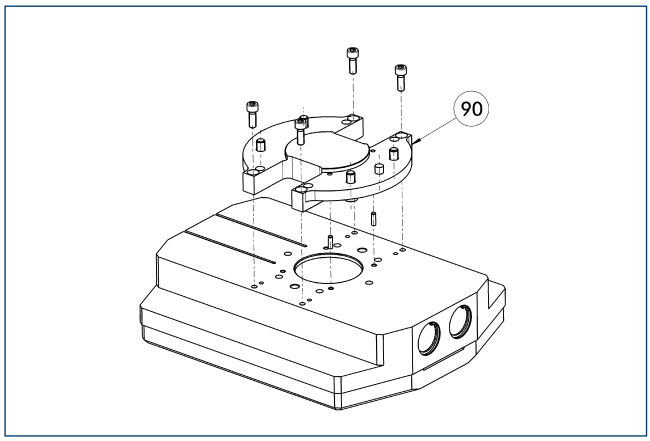

90 Adapter plate

Adapter plate for connecting further SCHUNK components or customized attachments.

Description	ID	
ISO flanges		
ADF 125	0308093	
ADF 160	0308094	

Mounting kit for IN 80 proximity switches

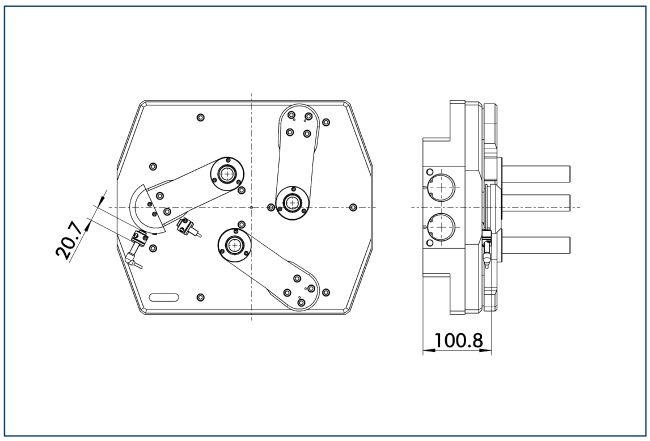

Limit position monitor can be mounted with mounting kit.

Description	ID	
Mounting kit for proximity switch		
AS-NHS-PZH-SF 350	0300576	

ⓘ This mounting kit needs to be ordered optionally as an accessory.

IN 80 inductive proximity switches

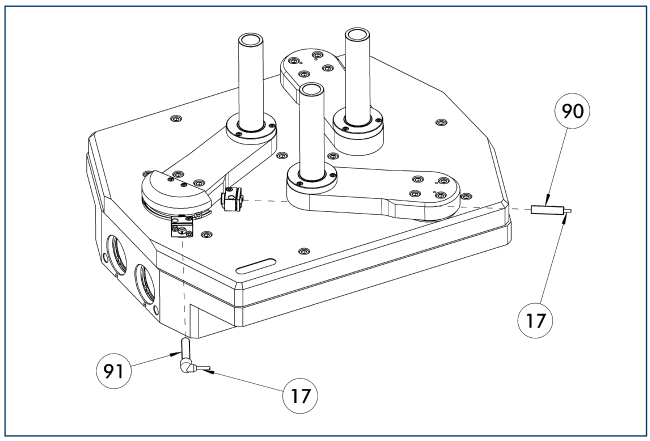

(17) Cable outlet
(91) IN ...-SA sensor
(90) IN ... sensor

Limit position monitor can be mounted with mounting kit.

Description	ID	Often combined
Mounting kit for proximity switch		
AS-NHS-PZH-SF 350	0300576	
Inductive proximity switches		
IN 80-S-M12	0301578	
IN 80-S-M8	0301478	●
IN-C 80-S-M8	0301475	
INK 80-S	0301550	
INK 80-SL	0301579	
Inductive proximity switches with lateral outlet		
IN 80-S-M12-SA	0301587	
IN 80-S-M8-SA	0301483	●
INK 80-S-SA	0301566	
Cable extensions		
KV BG12-SG12 3P-0030-PNP	0301999	
KV BG12-SG12 3P-0060-PNP	0301998	
KV BW08-SG08 3P-0030-PNP	0301495	
KV BW08-SG08 3P-0100-PNP	0301496	
KV BW08-SG08 3P-0200-PNP	0301497	●
KV BW12-SG12 3P-0030-PNP	0301595	
KV BW12-SG12 3P-0100-PNP	0301596	
KV BW12-SG12 3P-0200-PNP	0301597	
Clip for plug / socket		
CLI-M12	0301464	
CLI-M8	0301463	
Connection cables		
KA BG08-L 3P-0300-PNP	0301622	●
KA BG08-L 3P-0500-PNP	0301623	
KA BG12-L 3P-0500-PNP	30016369	
KA BW08-L 3P-0300-PNP	0301594	
KA BW08-L 3P-0500-PNP	0301502	
KA BW12-L 3P-0300-PNP	0301503	
KA BW12-L 3P-0500-PNP	0301507	
Sensor distributor		
V2-M8	0301775	●
V4-M8	0301746	
V8-M8	0301751	

ⓘ Two sensors (closer/S) are required for each unit, plus extension cables as an option. This mounting kit needs to be ordered optionally as an accessory. Please note the minimum permitted bending radii for the sensor cables, which are generally 35 mm.

MMS electronic magnetic switches

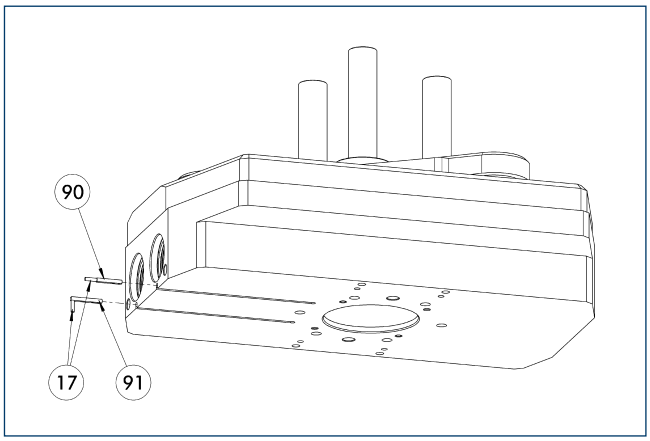

(17) Cable outlet
(91) MMS 22...-SA sensor
(90) MMS 22... sensor

End position monitoring for mounting in the C-slot.

Description	ID	Often combined
MMS electronic magnetic switches		
MMS 22-S-M8-PNP	0301032	●
MMSK 22-S-PNP	0301034	
MMS electronic magnetic switches with lateral cable outlet		
MMS 22-S-M8-PNP-SA	0301042	●
MMSK 22-S-PNP-SA	0301044	
Cable extensions		
KV BW08-SG08 3P-0030-PNP	0301495	
KV BW08-SG08 3P-0100-PNP	0301496	
KV BW08-SG08 3P-0200-PNP	0301497	●
Clip for plug / socket		
CLI-M8	0301463	
Connection cables		
KA BG08-L 3P-0300-PNP	0301622	●
KA BG08-L 3P-0500-PNP	0301623	
KA BW08-L 3P-0300-PNP	0301594	
KA BW08-L 3P-0500-PNP	0301502	
Sensor distributor		
V2-M8	0301775	●
V4-M8	0301746	
V8-M8	0301751	

ⓘ Two sensors (closer/S) are required for each unit, plus extension cables as an option. Please note the minimum permitted bending radii for the sensor cables, which are generally 35 mm.

MMS PI1 programmable magnetic switches

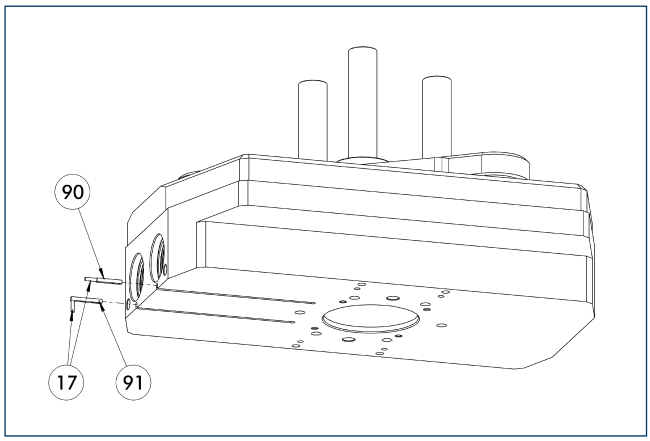

17 Cable outlet
91 MMS 22...-PI1-...-SA sensor
90 MMS 22...-PI1-... sensor

Position query with one programmable position per sensor and electronics integrated in sensor. Programmable via MT magnet teaching tool (included in the scope of delivery) or ST plug teaching tool (optional). Limit position query mounted in C-groove. If the ST plug teaching tools are listed in the table, teaching can only take place with the ST plug teaching tools.

Description	ID	Often combined
MMS PI1 programmable magnetic switches		
MMS 22-PI1-S-M8-PNP	0301160	●
MMSK 22-PI1-S-PNP	0301162	
MMS PI1-HD programmable magnetic switches with stainless steel housing		
MMS 22-PI1-S-M8-PNP-HD	0301110	●
MMSK 22-PI1-S-PNP-HD	0301112	
MMS PI1 programmable magnetic switches with lateral cable outlet		
MMS 22-PI1-S-M8-PNP-SA	0301166	●
MMSK 22-PI1-S-PNP-SA	0301168	

ⓘ Two sensors (closer/S) are required for each unit, plus extension cables as an option. Please note the minimum permitted bending radii for the sensor cables, which are generally 35 mm. Connection cable, cable extensions, and sensor distributors can be found in the table for the MMS 22.

Unique Precision due to patented Multi-tooth Guidance. The SCHUNK Centric Gripper with Four Gripper Fingers is ideal for the Requirements of Palletizing Operations.

Multi-finger Centric Gripper pneumatic

PZV Centric Gripper

Series	Sizes	Page
PZV		1090
PZV	64	1094
PZV	100	1102
PZV	125	1112
PZV	160	1122
PZV	200	1132

Loadable. Precise. Reliable.

PZV Centric Gripper

The multi-finger gripper for applications in which two or three fingers are insufficient.

Field of Application

4-finger centric grippers have advantages over the usual centric grippers, for example when cylindrical workpieces are being magazined in tablets. The PZV handles the workpieces in a controlled, process reliable manner despite the interfering contours.

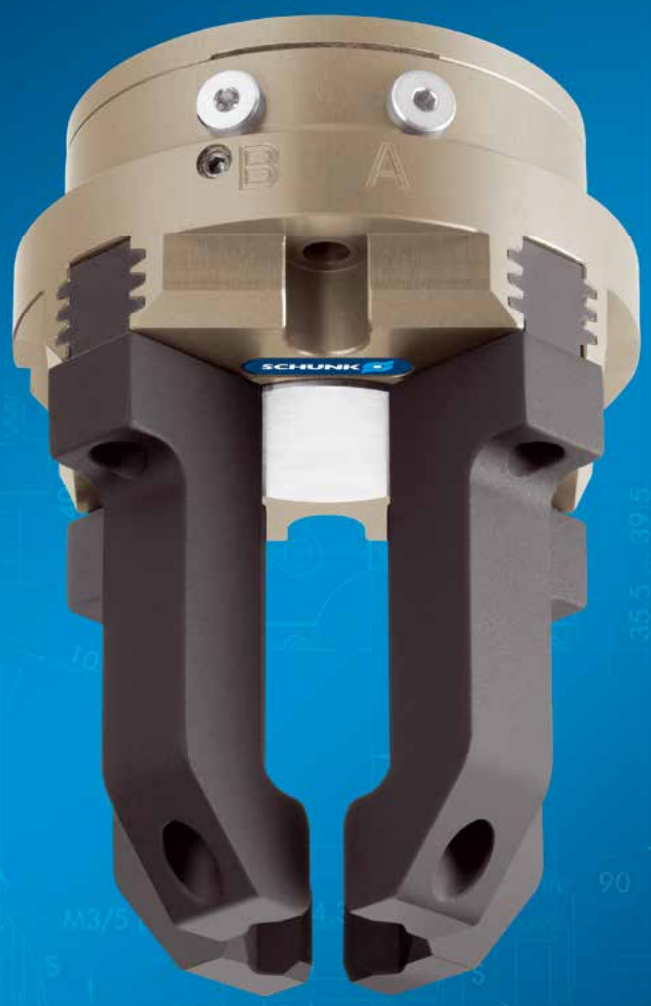

Advantages – Your benefit

Robust multi-tooth guidance for precise handling

Wedge-hook design for high power transmission and synchronized gripping

Air supply via hose-free direct connection or screw connections for flexible pressure supply in all automated systems

Comprehensive sensor accessory program for versatile interrogation possibilities and control of stroke position

Sizes	Weight	Gripping force	Stroke per jaw	Workpiece weight
Quantity: 5	0.5 .. 10 kg	570 .. 6900 N	4 .. 16 mm	2.8 .. 34.5 kg

Functional Description

The piston is moved up and down by compressed air.
The angled active surfaces of the wedge-hook produce a synchronized, centric jaw movement.

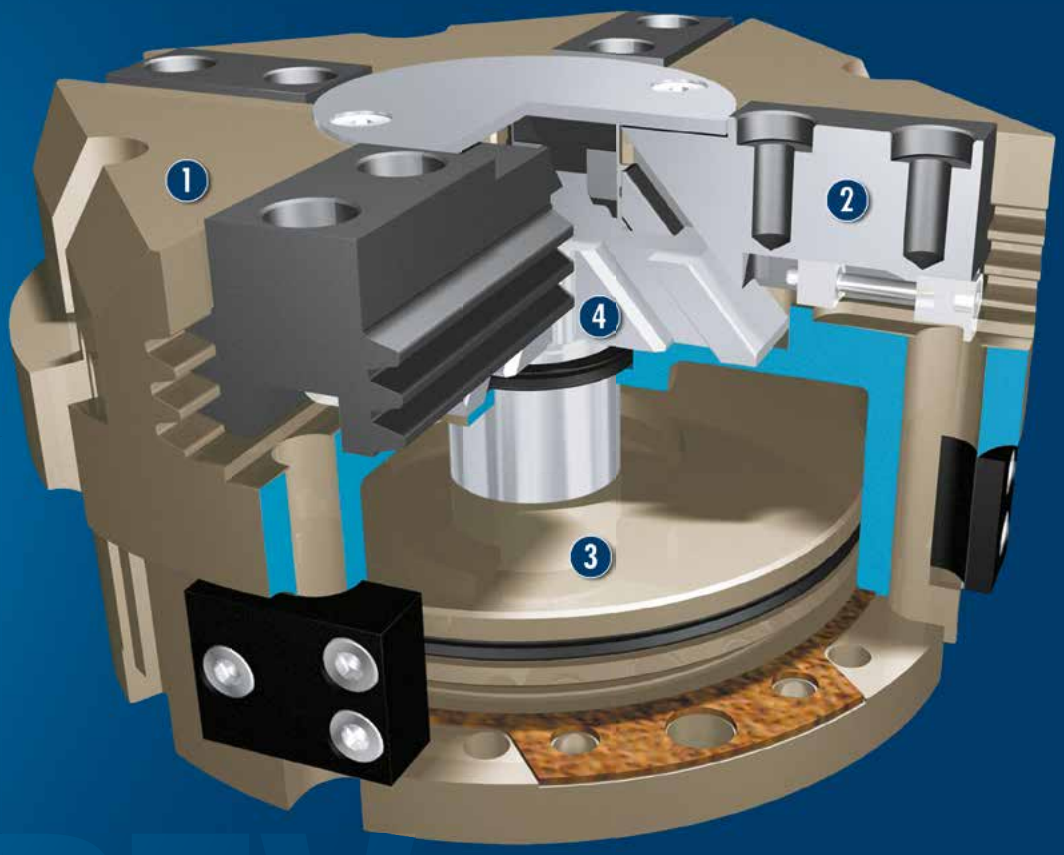

① **Housing**
Weight-optimized through application of high-strength aluminum alloy

② **Multiple-tooth guidance**
for mounting high loads onto the base jaw

③ **Drive**
through pneumatic double piston system

④ **Wedge-hook design**
for high power transmission and centric gripping

CAD data, operating manuals and other current product documents are available at **www.schunk.com**

General Notes about the Series

Operating principle: Wedge-hook kinematics

Housing material: Aluminum alloy, anodized

Base jaw material: Steel

Actuation: pneumatic, with filtered compressed air as per DIN ISO 8573-1: 7 4 4

Warranty: 36 months (for details, GTCs, and operating manuals, visit www.schunk.com)

Scope of delivery: Mount for proximity switch, centering sleeves, O-rings for direct connection, assembly and operating manual with declaration of incorporation.

Gripping force: is the arithmetic total of the gripping force applied to each gripper jaw at distance P (see illustration).

Finger length: is measured from the upper edge of the gripper housing in the direction of the main axis. The breach of the max. permitted finger length can bring higher abrasion. The maximum permissible finger length applies up to the nominal operating pressure. With higher pressures, the finger length must be reduced proportionally to the nominal operating pressure.

Repeat accuracy: is defined as the spread of the limit position after 100 consecutive strokes.

Workpiece weight: is calculated for a force-fit connection with a coefficient of friction of 0.1 and a safety factor of 2 against slippage of the workpiece on acceleration due to gravity g. Considerably heavier workpiece weights are permitted with form-fit gripping.

Closing and opening times: are purely the times that the base jaws or fingers are in motion. Valve switching times, hose filling times or PLC reaction times are not included in the above times and must be taken into consideration when determining cycle times.

Application example

Centering and rotating unit for the precise picking up, orientation and subsequent joining of square materials

1. PZV Multi-finger Gripper
2. OPS Collision Sensor
3. SRU-plus Rotary Actuator

SCHUNK offers more ...

The following components make the product PZV even more productive – the suitable addition for the highest functionality, flexibility, reliability, and controlled production.

Centering Sleeves

Fittings

Magnetic Switches

Inductive Proximity Switches

Sensor Distributor

Gripper Pads

Sensor Cables

Jaw Quick-change System

SDV-P Pressure Maintenance Valve

Finger Blanks

Force Measuring Jaws

Flexible Position Sensor

ⓘ Further information regarding the products can be found on the following product pages or at www.schunk.com. Please contact us for further information: SCHUNK technical hotline +49-7133-103-2696

Options and special Information

Intermediate sizes are available on request. Please note that the four-finger grip is an umbrella term, and may constitute a two or three-finger grip in certain cases.
Pressure reduction by using two fingers: The pressure must be reduced to a maximum of 5 bar for use of the PZV as a double 2-finger-parallel-gripper.

PZV 64

SCHUNK Grippers pneumatic | Multi-finger Centric Grippers | 4-Finger Centric Gripper

Gripping force, O.D. gripping

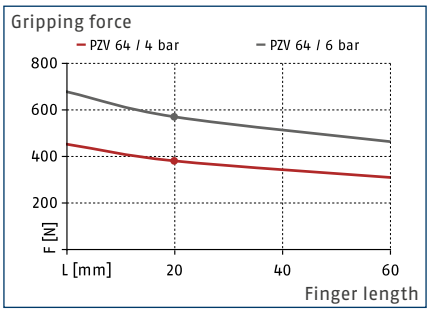

Gripping force, I.D. gripping

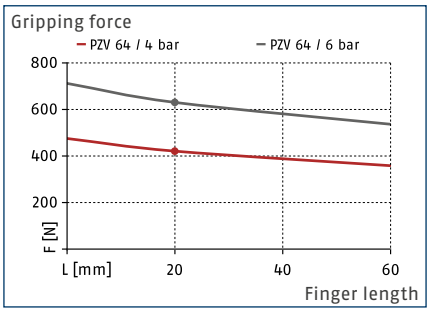

Finger load

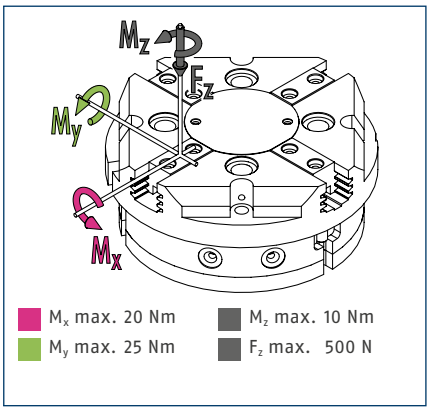

ⓘ The indicated moments and forces are static values, apply per base jaw and may occur simultaneously. M_y may arise in addition to the moment generated by the gripping force itself. If the max. permitted finger weight is exceeded, it is impreative to throttle the air supply so that the jaw movement occurs without any hitting or bouncing. Service life may be reduced.

Technical data

Description		PZV 64
ID		0304000
Stroke per jaw	[mm]	4
Closing- / opening force	[N]	570/630
Weight	[kg]	0.5
Recommended workpiece weight	[kg]	2.8
Fluid consumption per double stroke	[cm³]	25
min. / max. operating pressure	[bar]	2/8
Nominal operating pressure	[bar]	6
Closing- / opening time	[s]	0.02/0.02
max. permitted finger length	[mm]	64
max. permitted weight per finger	[kg]	0.18
IP class		40
min. / max. ambient temperature	[°C]	5/90
Repeat accuracy	[mm]	0.01

ⓘ The pressure must be reduced to a maximum of 5 bar for use of the PZV as a double 2-finger-parallel-gripper.

Main view

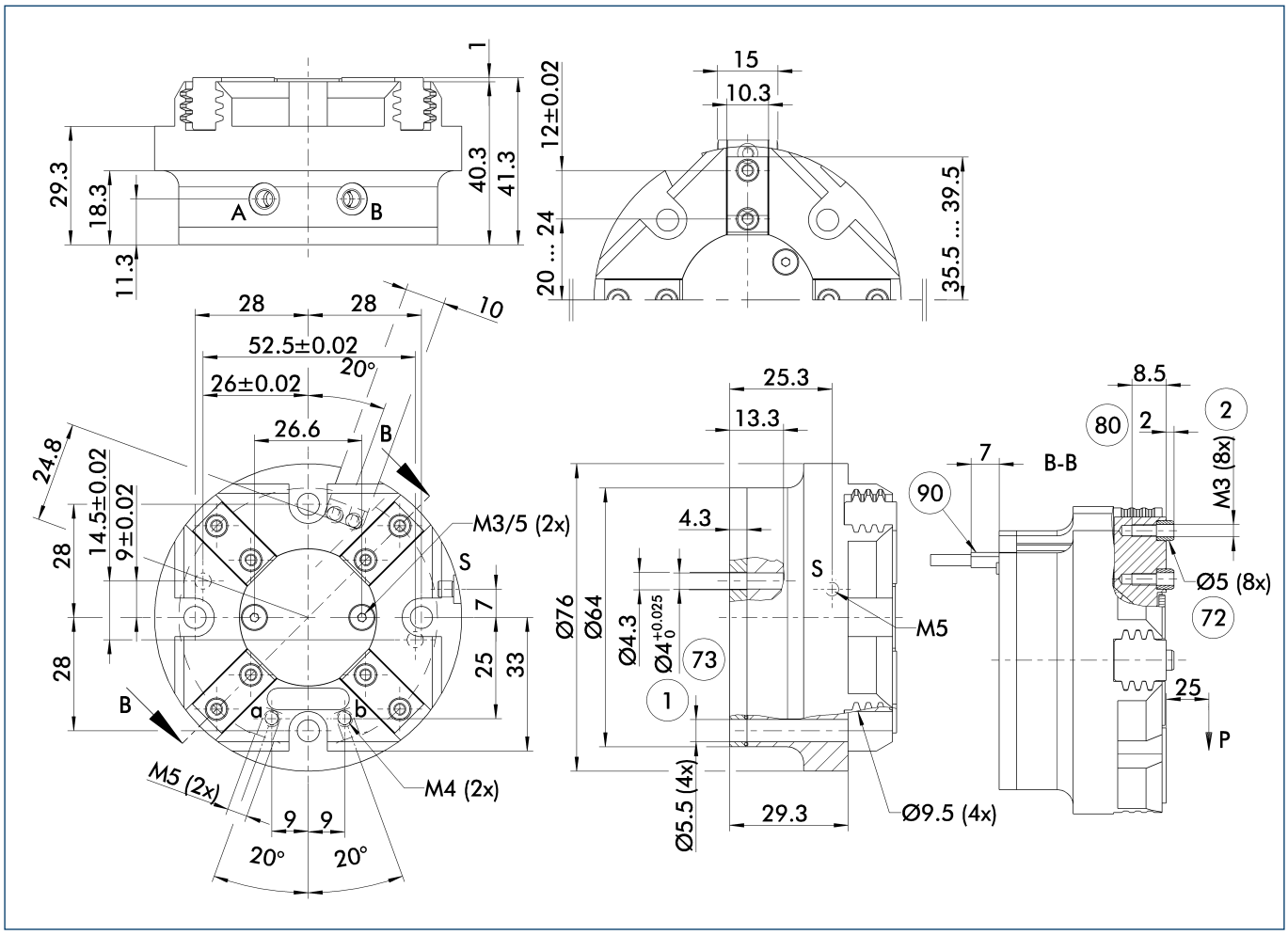

The drawing shows the gripper in the basic version with closed jaws, without dimensional consideration of the options described below.

ⓘ The SDV-P pressure maintenance valve can be used as a gripping force maintenance device (see catalog section on "Accessories").

A, a Main / direct connection, gripper opening

B, b Main / direct connection, gripper closing

S Air purge connection (0.5 ... 1 bar)

(1) Gripper connection

(2) Finger connection

(72) Fit for centering sleeves

(73) Fit for centering pins

(80) Depth of the centering sleeve hole in the mating part

(90) MMS 22... sensor

Hose-free direct connection M4

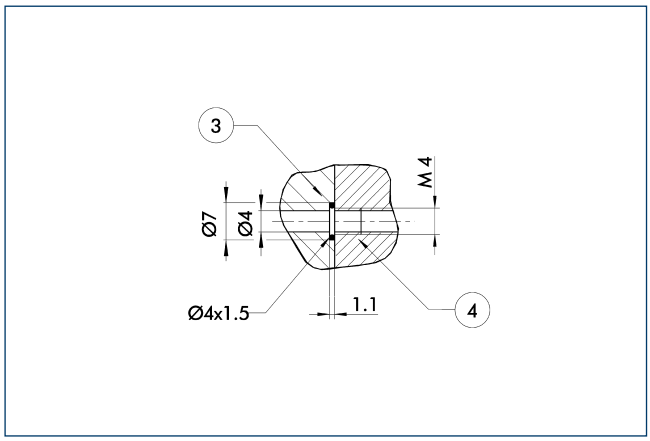

3 Adapter

4 Gripper

The direct connection is used for supplying compressed air without hoses. Instead, the pressure medium is fed through bore-holes in the mounting plate.

BSWS jaw quick-change systems

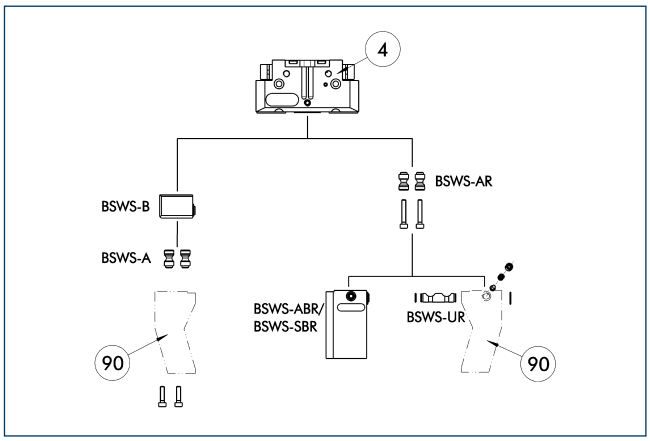

4 Gripper

90 Customized gripper fingers

There are various jaw quick-change systems available for the grippers. For detailed information, refer to the appropriate product.

Description	ID	
Jaw quick-change system adapter		
BSWS-AR 50	0300091	
BSWS-A 50	0303020	
Jaw quick-change system base		
BSWS-B 50	0303021	
Finger blanks with jaw quick-change system		
BSWS-ABR-PGZN-plus 50	0300071	
BSWS-SBR-PGZN-plus 50	0300081	
Jaw quick-change system reversed		
BSWS-UR 50	0302990	

ⓘ Only the systems listed in the table can be used.

ZBA L-plus 50 intermediate jaws

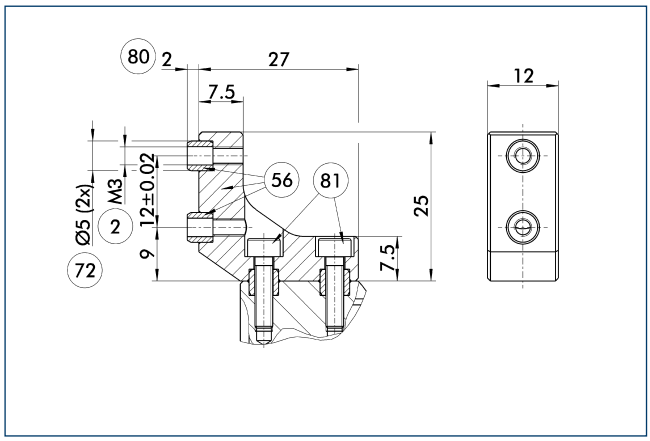

- 2 Finger connection
- 56 Included in delivery
- 72 Fit for centering sleeves
- 80 Depth of the centering sleeve hole in the mating part
- 81 Not included in the scope of delivery

Optionally intermediate jaws can be used, enabling direct connection and alignment of top jaws and various standard accessories in Z-direction.

Description	ID	Material	Scope of delivery
Intermediate jaws			
ZBA-L-plus 50	0311712	Aluminum	1

UZB 50 universal intermediate jaw

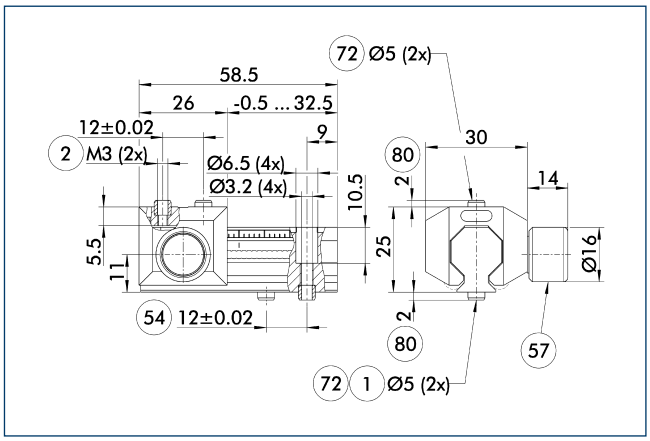

- 1 Gripper connection
- 2 Finger connection
- 54 Optional right or left connection
- 57 Locking
- 72 Fit for centering sleeves
- 80 Depth of the centering sleeve hole in the mating part

The universal intermediate jaw allows fast tool-free and reliable plugging and shifting of top jaws at the gripper.

Description	ID	Grid dimension [mm]
Universal intermediate jaw		
UZB 50	0300041	1.5
Finger blanks		
ABR-PGZN-plus 50	0300009	
SBR-PGZN-plus 50	0300019	

FMS-ZBA / ZBP 50 force-measuring jaws

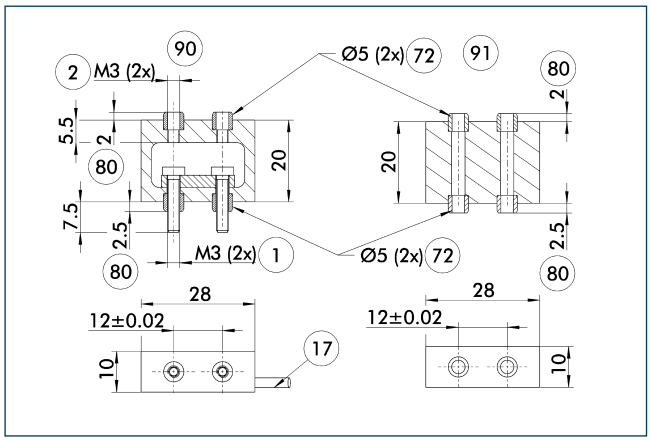

1 Gripper connection
2 Finger connection
17 Cable outlet
72 Fit for centering sleeves
80 Depth of the centering sleeve hole in the mating part
90 Active intermediate jaws
91 Passive intermediate jaws

Force measuring jaws measure gripping forces, but can also determine workpiece weights or dimensional deviations. There are active and passive intermediate jaws (FMS-ZBA or FMS-ZBP). At least one active force measuring jaw is required per gripper, the rest can be passive. For each active jaw, a FMS-A control unit and a FMS-AK connection cable are required.

Description	ID	Often combined
Active intermediate jaws		
FMS-ZBA 50	0301830	
Passive intermediate jaws		
FMS-ZBP 50	0301831	
Connection cables		
FMS-AK0200	0301820	●
FMS-AK0500	0301821	
FMS-AK1000	0301822	
FMS-AK2000	0301823	
Electronic processor		
FMS-A1	0301810	

ABR- / SBR-PGZN-plus 50 finger blanks

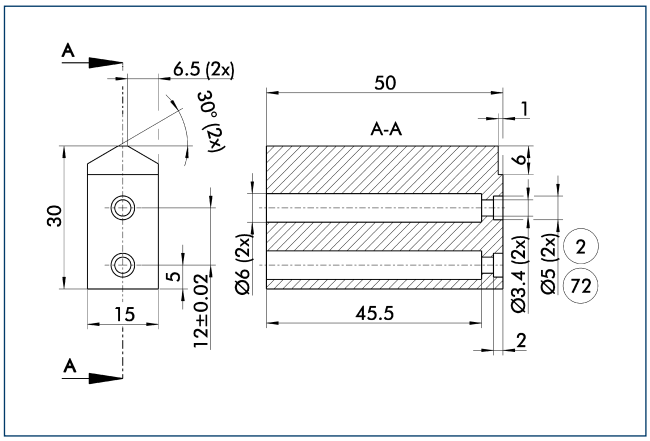

2 Finger connection
72 Fit for centering sleeves

Finger blanks for customized subsequent machining.

Description	ID	Material	Scope of delivery
Finger blanks			
ABR-PGZN-plus 50	0300009	Aluminum	1
SBR-PGZN-plus 50	0300019	16MnCr5	1

MMS electronic magnetic switches

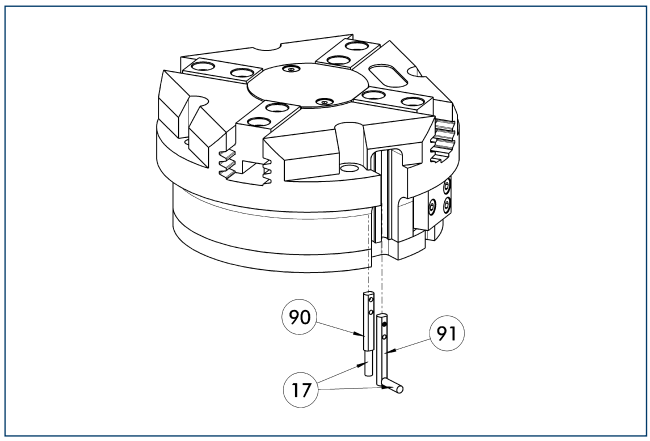

17 Cable outlet
91 MMS 22...-SA sensor
90 MMS 22... sensor

End position monitoring for mounting in the C-slot.

Description	ID	Often combined
MMS electronic magnetic switches		
MMS 22-S-M8-PNP	0301032	●
MMSK 22-S-PNP	0301034	
MMS electronic magnetic switches with lateral cable outlet		
MMS 22-S-M8-PNP-SA	0301042	●
MMSK 22-S-PNP-SA	0301044	
Cable extensions		
KV BW08-SG08 3P-0030-PNP	0301495	
KV BW08-SG08 3P-0100-PNP	0301496	
KV BW08-SG08 3P-0200-PNP	0301497	●
Clip for plug / socket		
CLI-M8	0301463	
Connection cables		
KA BG08-L 3P-0300-PNP	0301622	●
KA BG08-L 3P-0500-PNP	0301623	
KA BW08-L 3P-0300-PNP	0301594	
KA BW08-L 3P-0500-PNP	0301502	
Sensor distributor		
V2-M8	0301775	●
V4-M8	0301746	
V8-M8	0301751	

ⓘ Two sensors (closer/S) are required for each unit, plus extension cables as an option. Please note the minimum permitted bending radii for the sensor cables, which are generally 35 mm.

MMS PI1 programmable magnetic switches

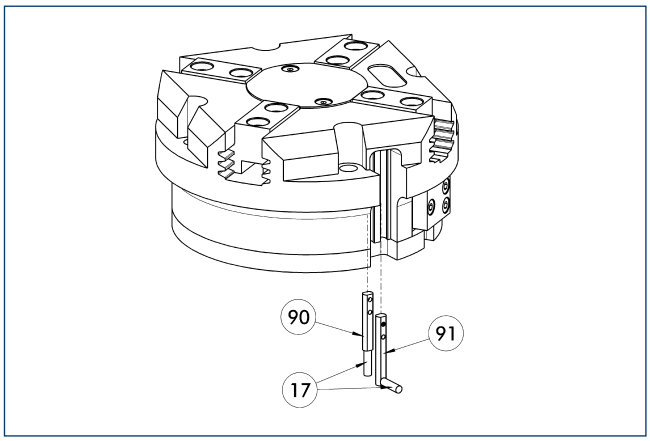

17 Cable outlet
91 MMS 22...-PI1-...-SA sensor
90 MMS 22...-PI1-... sensor

Position query with one programmable position per sensor and electronics integrated in sensor. Programmable via MT magnet teaching tool (included in the scope of delivery) or ST plug teaching tool (optional). Limit position query mounted in C-groove. If the ST plug teaching tools are listed in the table, teaching can only take place with the ST plug teaching tools.

Description	ID	Often combined
MMS PI1 programmable magnetic switches		
MMS 22-PI1-S-M8-PNP	0301160	●
MMSK 22-PI1-S-PNP	0301162	
MMS PI1-HD programmable magnetic switches with stainless steel housing		
MMS 22-PI1-S-M8-PNP-HD	0301110	●
MMSK 22-PI1-S-PNP-HD	0301112	
MMS PI1 programmable magnetic switches with lateral cable outlet		
MMS 22-PI1-S-M8-PNP-SA	0301166	●
MMSK 22-PI1-S-PNP-SA	0301168	

ⓘ Two sensors (closer/S) are required for each unit, plus extension cables as an option. Please note the minimum permitted bending radii for the sensor cables, which are generally 35 mm. Connection cable, cable extensions, and sensor distributors can be found in the table for the MMS 22.

MMS PI2 programmable magnetic switches

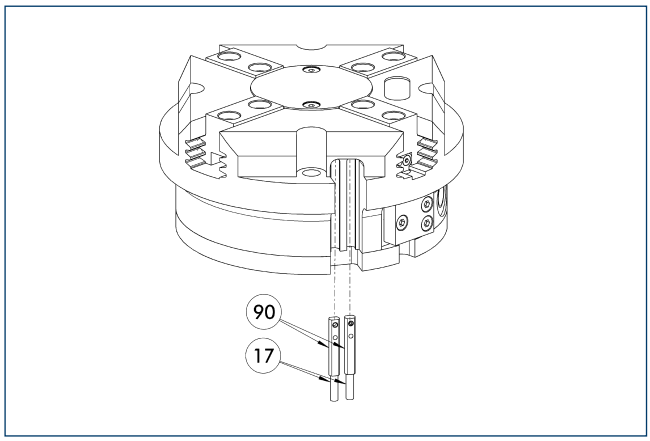

(17) Cable outlet (90) MMS 22...-PI2-... sensor

Position query with two programmable positions per sensor and electronics integrated in sensor. Programmable via MT magnet teaching tool (included in the scope of delivery) or ST plug teaching tool (optional). Limit position query mounted in C-groove. If the ST plug teaching tools are listed in the table, teaching can only take place with the ST plug teaching tools.

Description	ID	Often combined
MMS PI2 programmable magnetic switches		
MMS 22-PI2-S-M8-PNP	0301180	●
MMSK 22-PI2-S-PNP	0301182	
MMS PI2-HD programmable magnetic switches with stainless steel housing		
MMS 22-PI2-S-M8-PNP-HD	0301130	●
MMSK 22-PI2-S-PNP-HD	0301132	

ⓘ Per unit one sensor (closer/S) is required, optionally a cable extension. Please note the minimum permitted bending radii for the sensor cables, which are generally 35 mm. Connection cable, cable extensions, and sensor distributors can be found in the table for the MMS-P 22.

MMS-P programmable magnetic switches

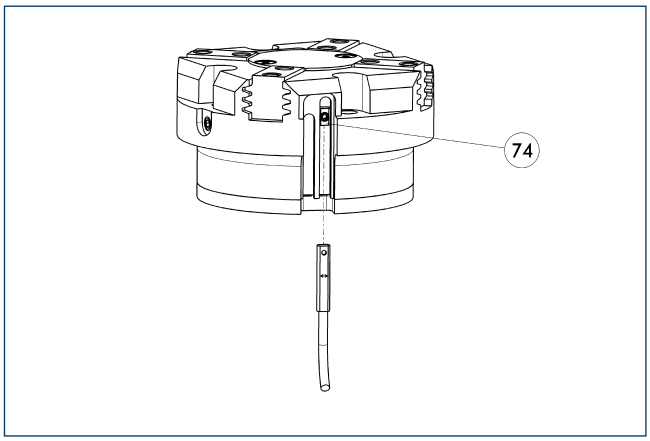

(74) Stop for MMS-P

Position monitoring with two programmable positions per sensor. The end position monitoring is mounted in the C-slot.

Description	ID	Often combined
MMS-P programmable magnetic switches		
MMSK-P 22-S-PNP	0301371	
MMS-P 22-S-M8-PNP	0301370	●
Clip for plug / socket		
CLI-M8	0301463	
Connection cables		
KA BG08-L 4P-0500	0307767	●
KA BG08-L 4P-1000	0307768	
KA BW08-L 4P-0500	0307765	
KA BW08-L 4P-1000	0307766	
Sensor distributor		
V2-M8-4P-2XM8-3P	0301380	

ⓘ Per unit one sensor (closer/S) is required, optionally a cable extension. Please note the minimum permitted bending radii for the sensor cables, which are generally 35 mm.

PZV 100

SCHUNK Grippers pneumatic | Multi-finger Centric Grippers | 4-Finger Centric Gripper

Gripping force, O.D. gripping

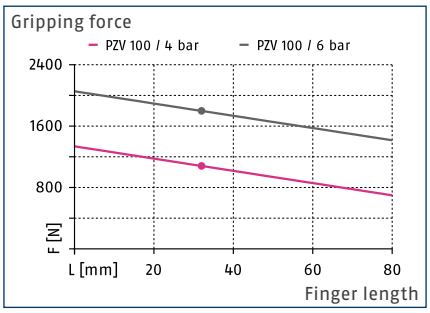

Gripping force, I.D. gripping

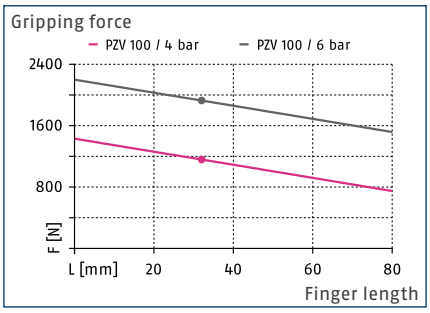

Finger load

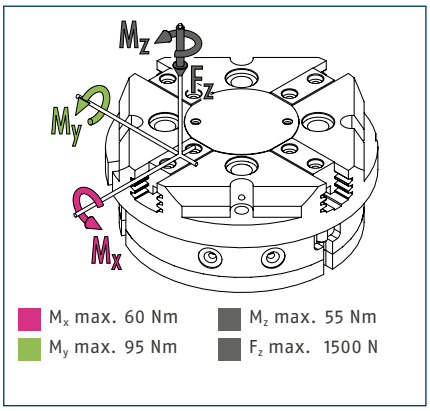

ⓘ The indicated moments and forces are static values, apply per base jaw and may occur simultaneously. M_y may arise in addition to the moment generated by the gripping force itself. If the max. permitted finger weight is exceeded, it is impreative to throttle the air supply so that the jaw movement occurs without any hitting or bouncing. Service life may be reduced.

Technical data

Description		PZV 100
ID		0304002
Stroke per jaw	[mm]	8
Closing- / opening force	[N]	1800/1900
Weight	[kg]	1.6
Recommended workpiece weight	[kg]	9
Fluid consumption per double stroke	[cm³]	120
min. / max. operating pressure	[bar]	2/8
Nominal operating pressure	[bar]	6
Closing- / opening time	[s]	0.04/0.04
max. permitted finger length	[mm]	80
max. permitted weight per finger	[kg]	0.6
IP class		40
min. / max. ambient temperature	[°C]	5/90
Repeat accuracy	[mm]	0.01

ⓘ The pressure must be reduced to a maximum of 5 bar for use of the PZV as a double 2-finger-parallel-gripper.

Main view

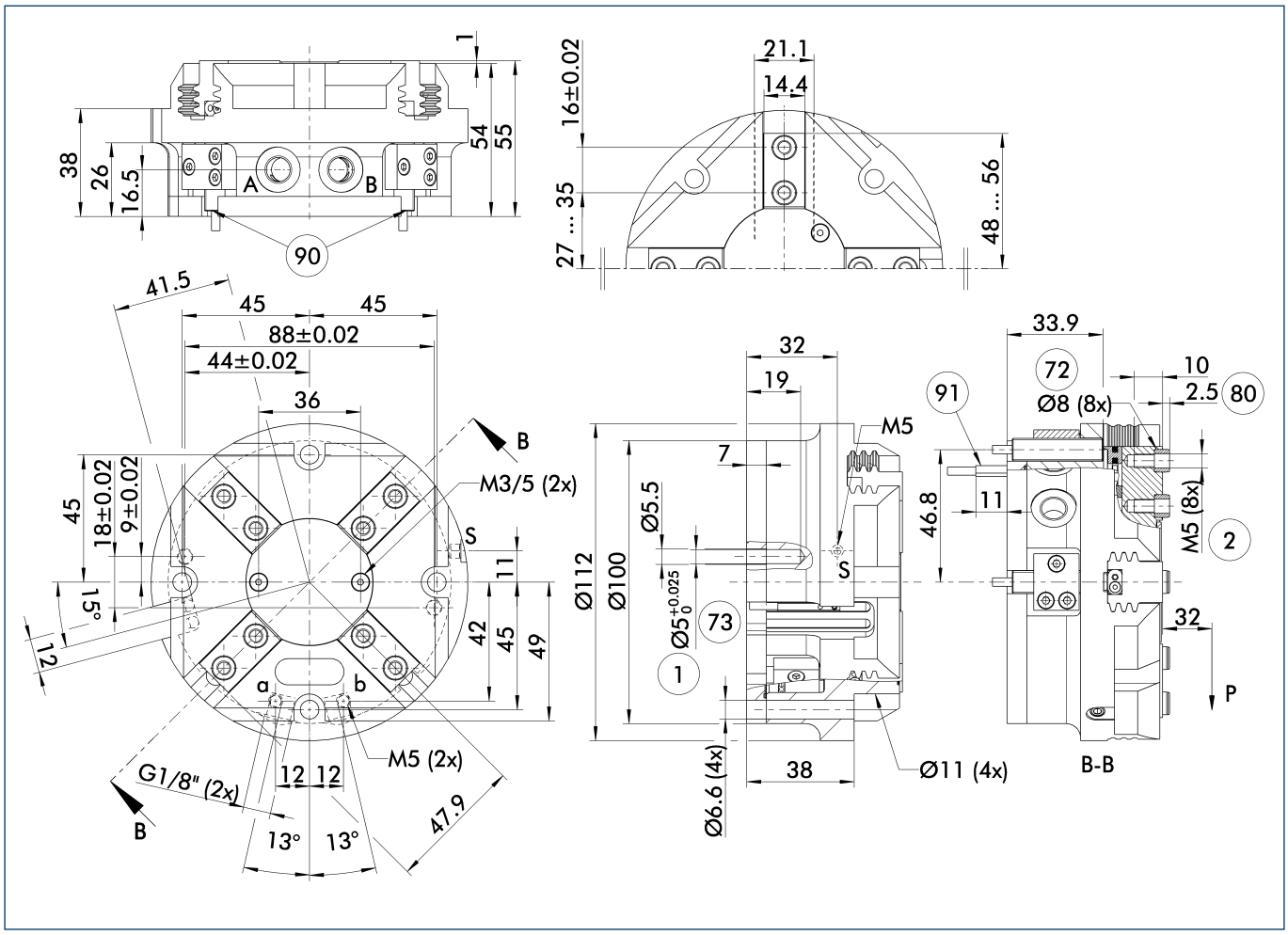

The drawing shows the gripper in the basic version with closed jaws, without dimensional consideration of the options described below.

ⓘ The SDV-P pressure maintenance valve can be used as a gripping force maintenance device (see catalog section on "Accessories").

A, a Main / direct connection, gripper opening

B, b Main / direct connection, gripper closing

S Air purge connection (0.5 ... 1 bar)

(1) Gripper connection

(2) Finger connection

(72) Fit for centering sleeves

(73) Fit for centering pins

(80) Depth of the centering sleeve hole in the mating part

(90) IN ... sensor

(91) MMS 22... sensor

Hose-free direct connection M5

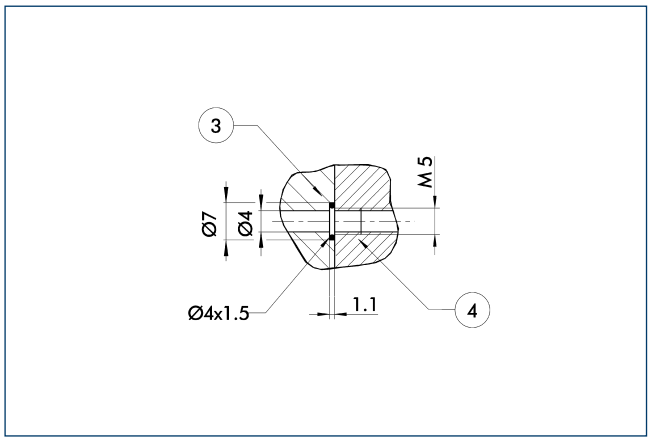

3 Adapter

4 Gripper

The direct connection is used for supplying compressed air without hoses. Instead, the pressure medium is fed through bore-holes in the mounting plate.

BSWS jaw quick-change systems

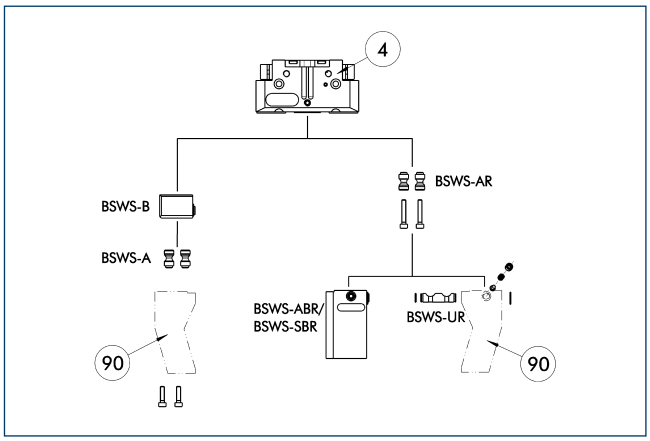

4 Gripper

90 Customized gripper fingers

There are various jaw quick-change systems available for the grippers. For detailed information, refer to the appropriate product.

Description	ID	
Jaw quick-change system adapter		
BSWS-AR 80	0300093	
BSWS-A 80	0303024	
Jaw quick-change system base		
BSWS-B 80	0303025	
Finger blanks with jaw quick-change system		
BSWS-ABR-PGZN-plus 80	0300073	
BSWS-SBR-PGZN-plus 80	0300083	
Jaw quick-change system reversed		
BSWS-UR 80	0302992	

ⓘ Only the systems listed in the table can be used.

ZBA L-plus 80 intermediate jaws

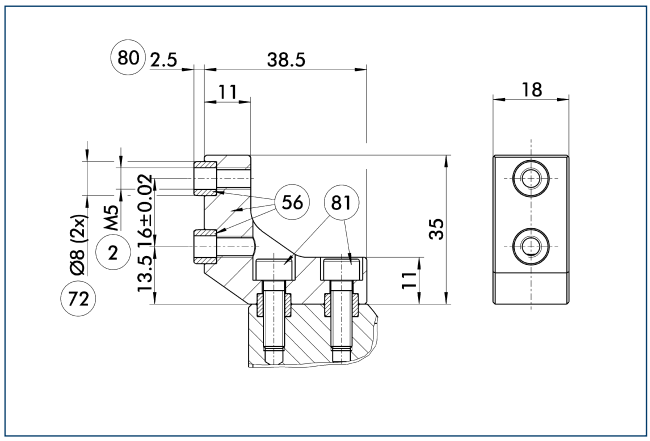

- (2) Finger connection
- (56) Included in delivery
- (72) Fit for centering sleeves
- (80) Depth of the centering sleeve hole in the mating part
- (81) Not included in the scope of delivery

Optionally intermediate jaws can be used, enabling direct connection and alignment of top jaws and various standard accessories in Z-direction.

Description	ID	Material	Scope of delivery
Intermediate jaws			
ZBA-L-plus 80	0311732	Aluminum	1

UZB 80 universal intermediate jaw

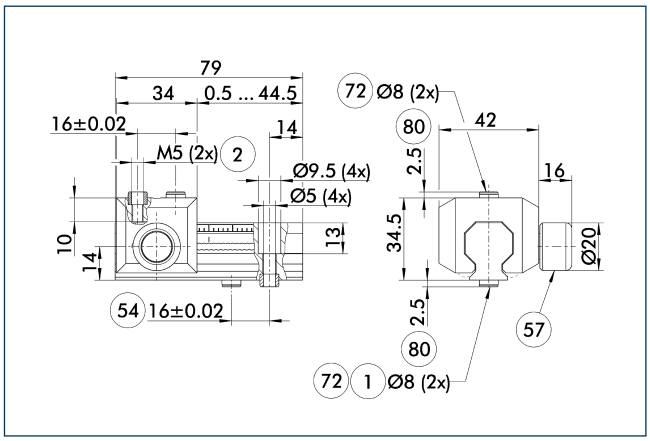

- (1) Gripper connection
- (2) Finger connection
- (54) Optional right or left connection
- (57) Locking
- (72) Fit for centering sleeves
- (80) Depth of the centering sleeve hole in the mating part

The universal intermediate jaw allows fast tool-free and reliable plugging and shifting of top jaws at the gripper.

Description	ID	Grid dimension [mm]
Universal intermediate jaw		
UZB 80	0300043	2
UZB-S 80	5518271	2
Finger blanks		
ABR-PGZN-plus 80	0300011	
SBR-PGZN-plus 80	0300021	

FMS-ZBA / ZBP 80 force-measuring jaws

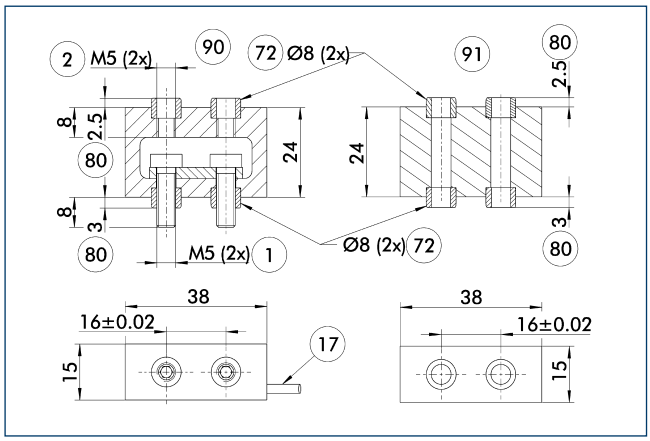

1 Gripper connection
2 Finger connection
17 Cable outlet
72 Fit for centering sleeves
80 Depth of the centering sleeve hole in the mating part
90 Active intermediate jaws
91 Passive intermediate jaws

Force measuring jaws measure gripping forces, but can also determine workpiece weights or dimensional deviations. There are active and passive intermediate jaws (FMS-ZBA or FMS-ZBP). At least one active force measuring jaw is required per gripper, the rest can be passive. For each active jaw, a FMS-A control unit and a FMS-AK connection cable are required.

Description	ID	Often combined
Active intermediate jaws		
FMS-ZBA 80	0301834	
Passive intermediate jaws		
FMS-ZBP 80	0301835	
Connection cables		
FMS-AK0200	0301820	●
FMS-AK0500	0301821	
FMS-AK1000	0301822	
FMS-AK2000	0301823	
Electronic processor		
FMS-A1	0301810	

ABR- / SBR-PGZN-plus 80 finger blanks

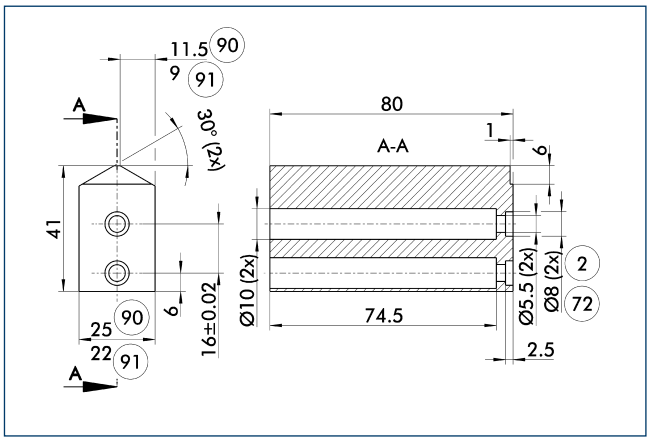

2 Finger connection
72 Fit for centering sleeves
90 ABR-PGZN-plus
91 SBR-PGZN-plus

Finger blanks for customized subsequent machining.

Description	ID	Material	Scope of delivery
Finger blanks			
ABR-PGZN-plus 80	0300011	Aluminum	1
SBR-PGZN-plus 80	0300021	16MnCr5	1

Inductive proximity switches

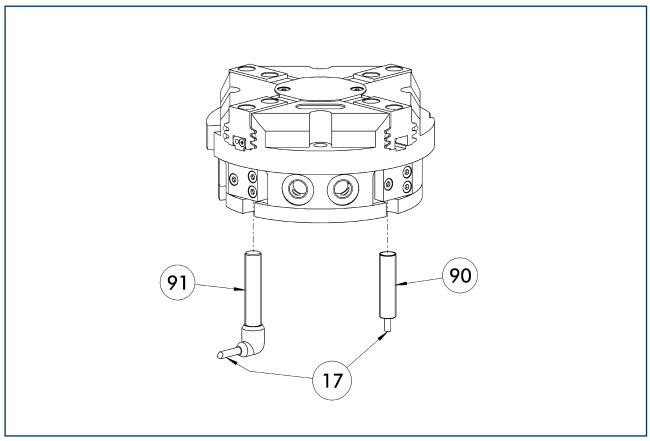

(17) Cable outlet
(91) IN ...-SA sensor
(90) IN ... sensor

Directly mounted limit position monitor.

Description	ID	Often combined
Inductive proximity switches		
IN 80-S-M12	0301578	
IN 80-S-M8	0301478	●
IN-C 80-S-M8	0301475	
INK 80-S	0301550	
Inductive proximity switches with lateral outlet		
IN 80-S-M12-SA	0301587	
IN 80-S-M8-SA	0301483	●
INK 80-S-SA	0301566	
Cable extensions		
KV BG12-SG12 3P-0030-PNP	0301999	
KV BG12-SG12 3P-0060-PNP	0301998	
KV BW08-SG08 3P-0030-PNP	0301495	
KV BW08-SG08 3P-0100-PNP	0301496	
KV BW08-SG08 3P-0200-PNP	0301497	●
KV BW12-SG12 3P-0030-PNP	0301595	
KV BW12-SG12 3P-0100-PNP	0301596	
KV BW12-SG12 3P-0200-PNP	0301597	
Clip for plug / socket		
CLI-M12	0301464	
CLI-M8	0301463	
Connection cables		
KA BG08-L 3P-0300-PNP	0301622	●
KA BG08-L 3P-0500-PNP	0301623	
KA BG12-L 3P-0500-PNP	30016369	
KA BW08-L 3P-0300-PNP	0301594	
KA BW08-L 3P-0500-PNP	0301502	
KA BW12-L 3P-0300-PNP	0301503	
KA BW12-L 3P-0500-PNP	0301507	
Sensor distributor		
V2-M8	0301775	●
V2-M12	0301776	●
V4-M12	0301747	

ⓘ Two sensors (closer/S) are required for each unit, plus extension cables as an option. Please note the minimum permitted bending radii for the sensor cables, which are generally 35 mm.

Flexible position sensor

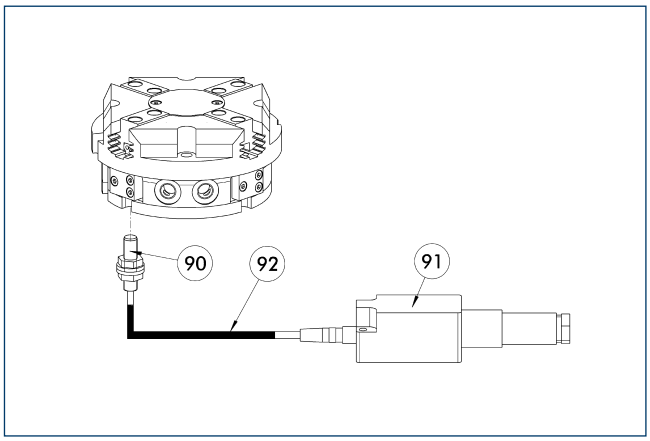

(90) FPS-S sensor
(92) Cable extensions
(91) FPS-F5 / -F5 T electronic processor

Flexible position monitoring of up to five positions.

Description	ID	Often combined
Mounting kit for FPS		
AS-FPS-PGZN-plus 80-1/PZB 80/PZB 100	0301632	
Electronic processor		
FPS-F5	0301805	●
FPS-F5 T	0301807	
Sensor		
FPS-S M8	0301704	
Clip for plug / socket		
CLI-M8	0301463	

ⓘ When using a FPS system, a FPS sensor (FPS-S) and a control unit (FPS-F5 / F5 T) are required for each gripper as well as a mounting kit (AS), if listed. Cable extensions (KV) are available as options in the "Accessories" catalog section.

MMS electronic magnetic switches

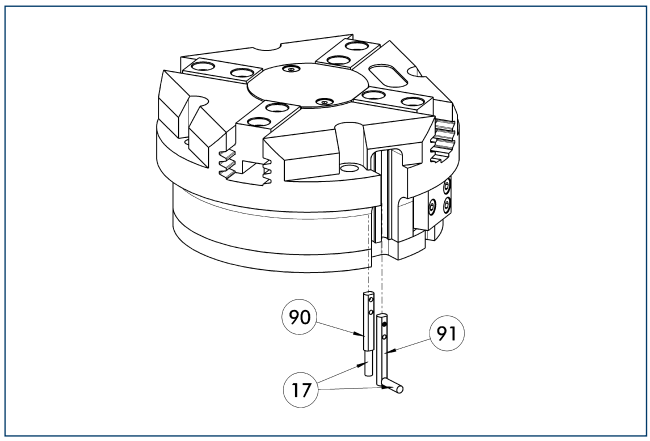

(17) Cable outlet
(91) MMS 22...-SA sensor
(90) MMS 22... sensor

End position monitoring for mounting in the C-slot.

Description	ID	Often combined
MMS electronic magnetic switches		
MMS 22-S-M8-PNP	0301032	●
MMSK 22-S-PNP	0301034	
MMS electronic magnetic switches with lateral cable outlet		
MMS 22-S-M8-PNP-SA	0301042	●
MMSK 22-S-PNP-SA	0301044	
Reed switches		
RMS 22-S-M8	0377720	●
Cable extensions		
KV BW08-SG08 3P-0030-PNP	0301495	
KV BW08-SG08 3P-0100-PNP	0301496	
KV BW08-SG08 3P-0200-PNP	0301497	●
Clip for plug / socket		
CLI-M8	0301463	
Connection cables		
KA BG08-L 3P-0300-PNP	0301622	●
KA BG08-L 3P-0500-PNP	0301623	
KA BW08-L 3P-0300-PNP	0301594	
KA BW08-L 3P-0500-PNP	0301502	
RSS radio sensor system		
RSS-T2	0377710	
Sensor distributor		
V2-M8	0301775	●
V4-M8	0301746	
V8-M8	0301751	

ⓘ Two sensors (closer/S) are required for each unit, plus extension cables as an option. Please note the minimum permitted bending radii for the sensor cables, which are generally 35 mm.

MMS PI1 programmable magnetic switches

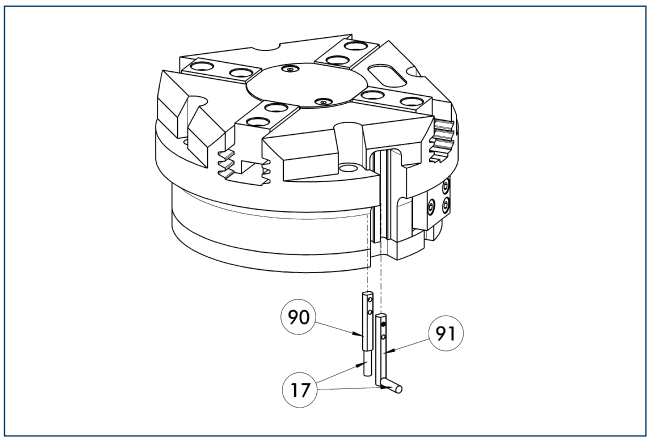

(17) Cable outlet
(91) MMS 22...-PI1-...-SA sensor
(90) MMS 22...-PI1-... sensor

Position query with one programmable position per sensor and electronics integrated in sensor. Programmable via MT magnet teaching tool (included in the scope of delivery) or ST plug teaching tool (optional). Limit position query mounted in C-groove. If the ST plug teaching tools are listed in the table, teaching can only take place with the ST plug teaching tools.

Description	ID	Often combined
MMS PI1 programmable magnetic switches		
MMS 22-PI1-S-M8-PNP	0301160	●
MMSK 22-PI1-S-PNP	0301162	
MMS PI1-HD programmable magnetic switches with stainless steel housing		
MMS 22-PI1-S-M8-PNP-HD	0301110	●
MMSK 22-PI1-S-PNP-HD	0301112	
MMS PI1 programmable magnetic switches with lateral cable outlet		
MMS 22-PI1-S-M8-PNP-SA	0301166	●
MMSK 22-PI1-S-PNP-SA	0301168	

ⓘ Two sensors (closer/S) are required for each unit, plus extension cables as an option. Please note the minimum permitted bending radii for the sensor cables, which are generally 35 mm. Connection cable, cable extensions, and sensor distributors can be found in the table for the MMS 22.

MMS PI2 programmable magnetic switches

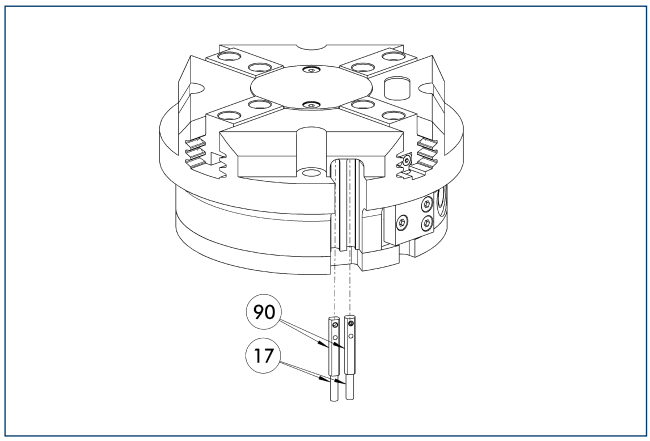

(17) Cable outlet (90) MMS 22...-PI2-... sensor

Position query with two programmable positions per sensor and electronics integrated in sensor. Programmable via MT magnet teaching tool (included in the scope of delivery) or ST plug teaching tool (optional). Limit position query mounted in C-groove. If the ST plug teaching tools are listed in the table, teaching can only take place with the ST plug teaching tools.

Description	ID	Often combined
MMS PI2 programmable magnetic switches		
MMS 22-PI2-S-M8-PNP	0301180	●
MMSK 22-PI2-S-PNP	0301182	
MMS PI2-HD programmable magnetic switches with stainless steel housing		
MMS 22-PI2-S-M8-PNP-HD	0301130	●
MMSK 22-PI2-S-PNP-HD	0301132	

ⓘ Per unit one sensor (closer/S) is required, optionally a cable extension. Please note the minimum permitted bending radii for the sensor cables, which are generally 35 mm. Connection cable, cable extensions, and sensor distributors can be found in the table for the MMS-P 22.

MMS-P programmable magnetic switches

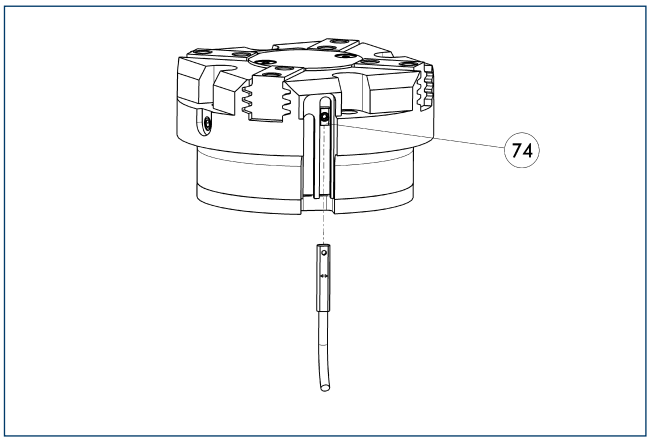

(74) Stop for MMS-P

Position monitoring with two programmable positions per sensor. The end position monitoring is mounted in the C-slot.

Description	ID	Often combined
MMS-P programmable magnetic switches		
MMSK-P 22-S-PNP	0301371	
MMS-P 22-S-M8-PNP	0301370	●
Clip for plug / socket		
CLI-M8	0301463	
Connection cables		
KA BG08-L 4P-0500	0307767	●
KA BG08-L 4P-1000	0307768	
KA BW08-L 4P-0500	0307765	
KA BW08-L 4P-1000	0307766	
Sensor distributor		
V2-M8-4P-2XM8-3P	0301380	

ⓘ Per unit one sensor (closer/S) is required, optionally a cable extension. Please note the minimum permitted bending radii for the sensor cables, which are generally 35 mm.

APS-Z80 analog position sensor

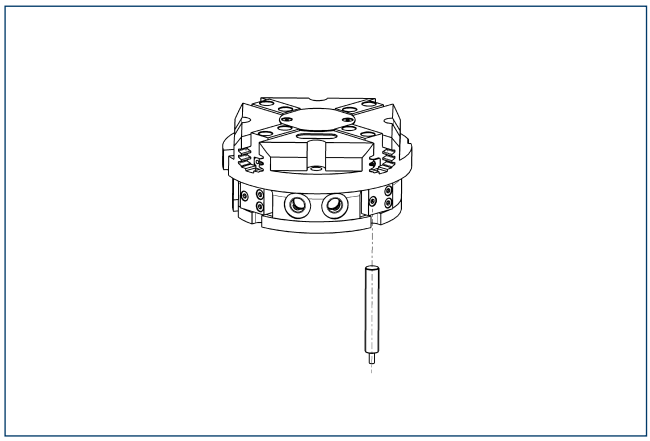

Contactlessly measuring, analog multi-position monitoring for any number of positions.

Description	ID	Often combined
Mounting kit for APS-Z80		
AS-APS-Z80-PGZN-plus 80-1	0302107	
Sensor		
APS-Z80-K	0302072	
APS-Z80-M8	0302070	●

ⓘ When using an APS system, one mounting kit (AS-APS-Z80) and one APS-Z80 sensor is required per gripper.

APS-M1 analog position sensor

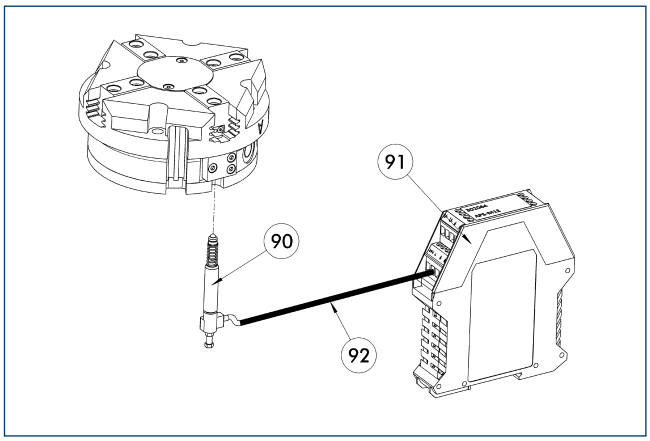

90 APS-M1S sensor
91 APS-M1E electronic processor
92 APS-K extension cable

Analog multi position monitoring for any desired positions.

Description	ID	Often combined
Mounting kit for APS-M1		
AS-APS-M1-PGZN-plus 80-1	0302077	
Connection cables		
APS-K0200	0302066	●
APS-K0700	0302068	
Electronic processor		
APS-M1E	0302064	
Sensor		
APS-M1S	0302062	

ⓘ When using an APS system, for each gripper a mounting kit (AS-APS-M1), an APS-M1S sensor (incl. 3 m cable) as well as an electronics (APS-M1e) are required. An extension cable (APS-K) can be connected between the sensor and the electronics as an option. The max. cable length between the sensor and the electronics is 10 m, between the electronics and their control unit (PLC) it is max. 1 m.

Cylindrical reed switches

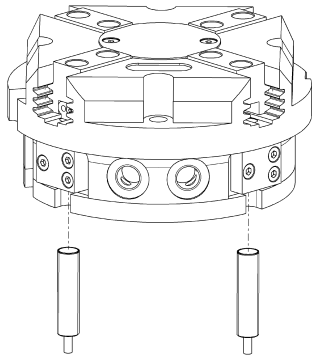

Limit position monitor can be mounted with mounting kit.

Description	ID	
Mounting kit for proximity switch		
AS-RMS 80 PGN/PZN-plus 64/80	0377725	
Reed switches		
RMS 80-S-M8	0377721	

ⓘ Two sensors (closer/S) are required for each unit, plus extension cables as an option. This mounting kit needs to be ordered optionally as an accessory. Two mounting kits are required per gripper. Please note the minimum permitted bending radii for the sensor cables, which are generally 35 mm.

PZV 125

SCHUNK Grippers pneumatic | Multi-finger Centric Grippers | 4-Finger Centric Gripper

Gripping force, O.D. gripping

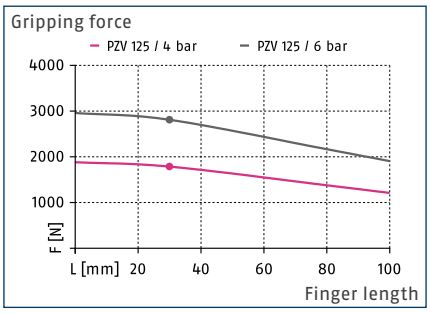

Gripping force, I.D. gripping

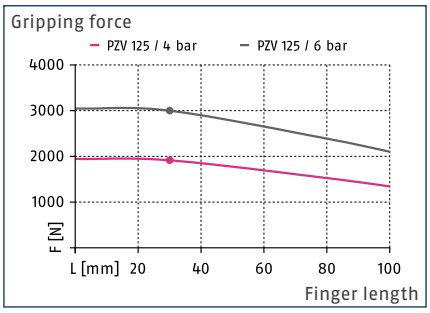

Finger load

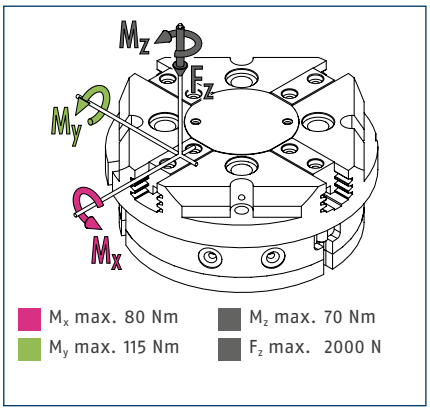

ⓘ The indicated moments and forces are static values, apply per base jaw and may occur simultaneously. M_y may arise in addition to the moment generated by the gripping force itself. If the max. permitted finger weight is exceeded, it is impreative to throttle the air supply so that the jaw movement occurs without any hitting or bouncing. Service life may be reduced.

Technical data

Description		PZV 125
ID		0304003
Stroke per jaw	[mm]	10
Closing- / opening force	[N]	3000/3230
Weight	[kg]	2.3
Recommended workpiece weight	[kg]	15
Fluid consumption per double stroke	[cm³]	230
min. / max. operating pressure	[bar]	2/8
Nominal operating pressure	[bar]	6
Closing- / opening time	[s]	0.1/0.1
max. permitted finger length	[mm]	100
max. permitted weight per finger	[kg]	1.1
IP class		40
min. / max. ambient temperature	[°C]	5/90
Repeat accuracy	[mm]	0.01

ⓘ The pressure must be reduced to a maximum of 5 bar for use of the PZV as a double 2-finger-parallel-gripper.

Main view

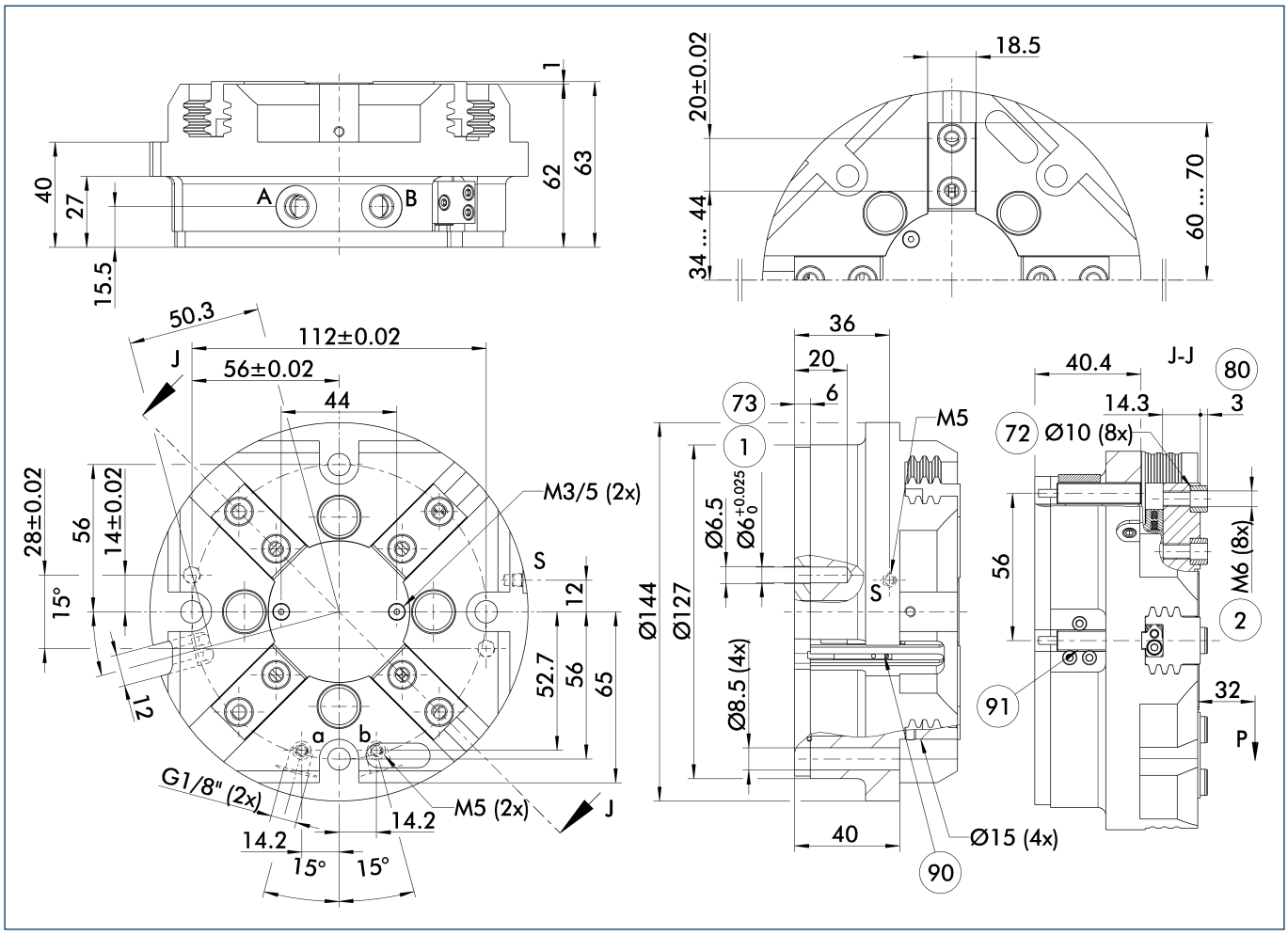

The drawing shows the gripper in the basic version with closed jaws, without dimensional consideration of the options described below.

ⓘ The SDV-P pressure maintenance valve can be used as a gripping force maintenance device (see catalog section on "Accessories").

A, a Main / direct connection, gripper opening

B, b Main / direct connection, gripper closing

S Air purge connection (0.5 ... 1 bar)

(1) Gripper connection

(2) Finger connection

(72) Fit for centering sleeves

(73) Fit for centering pins

(80) Depth of the centering sleeve hole in the mating part

(90) MMS 22... sensor

(91) IN ... sensor

Hose-free direct connection M5

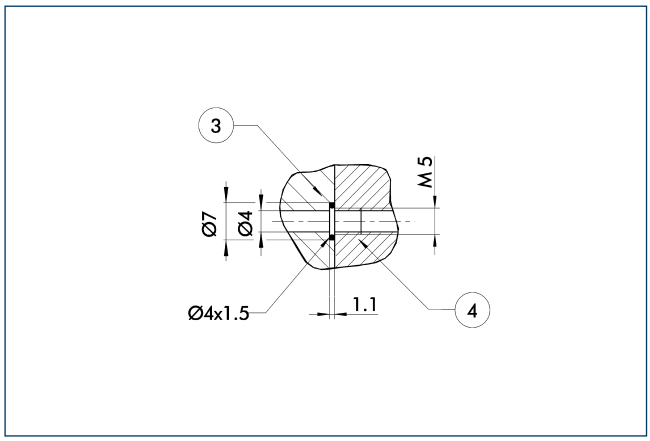

(3) Adapter (4) Gripper

The direct connection is used for supplying compressed air without hoses. Instead, the pressure medium is fed through bore-holes in the mounting plate.

Spring-loaded pressure piece

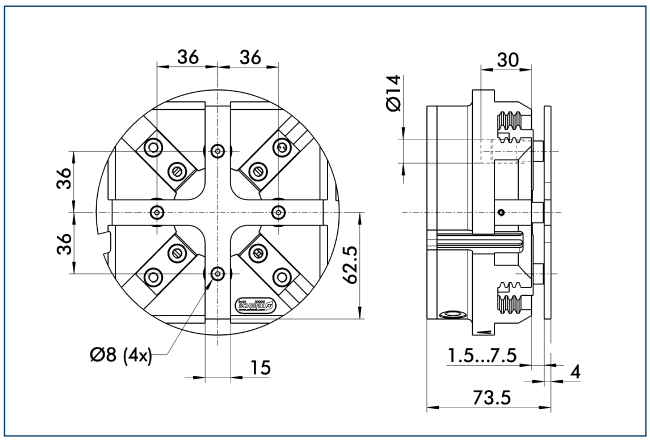

For spring-supported positioning of the workpiece against a stop after the gripper has opened. Especially developed for loading machines.

Description	ID	Stroke [mm]	Min. force [N]
Spring-loaded pressure piece			
A-PZV 125	0304013	6	173

ⓘ The pressure piece cannot be combined with the dust-tight option. Please ask for details about a special pressure piece.

BSWS jaw quick-change systems

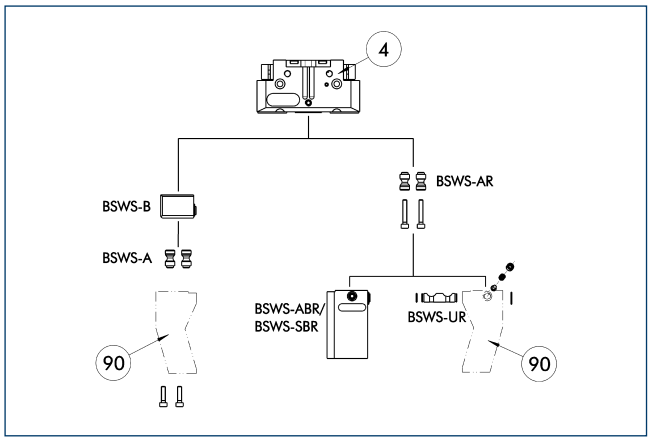

(4) Gripper (90) Customized gripper fingers

Different jaw quick-change systems are available for this gripper. For more detailed information please see the relevant product chapters in the catalog.

Description	ID	
Jaw quick-change system adapter		
BSWS-AR 100	0300094	
BSWS-A 100	0303026	
Jaw quick-change system base		
BSWS-B 100	0303027	
Finger blanks with jaw quick-change system		
BSWS-ABR-PGZN-plus 100	0300074	
BSWS-SBR-PGZN-plus 100	0300084	
Jaw quick-change system reversed		
BSWS-UR 100	0302993	

ⓘ Only the systems listed in the table can be used.

ZBA L-plus 100 intermediate jaws

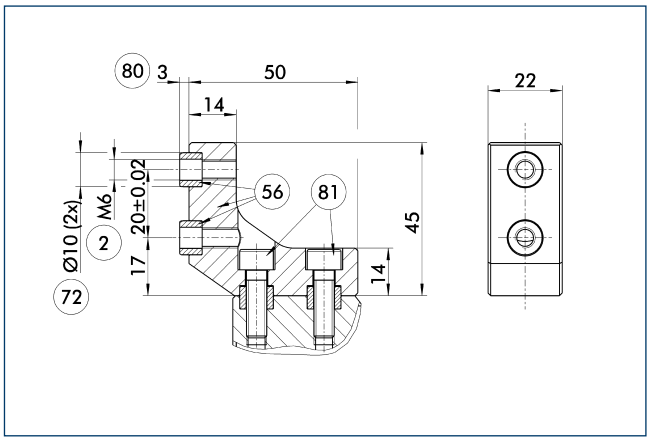

(2) Finger connection
(56) Included in delivery
(72) Fit for centering sleeves
(80) Depth of the centering sleeve hole in the mating part
(81) Not included in the scope of delivery

Optionally intermediate jaws can be used, enabling direct connection and alignment of top jaws and various standard accessories in Z-direction.

Description	ID	Material	Scope of delivery
Intermediate jaws			
ZBA-L-plus 100	0311742	Aluminum	1

UZB 100 universal intermediate jaw

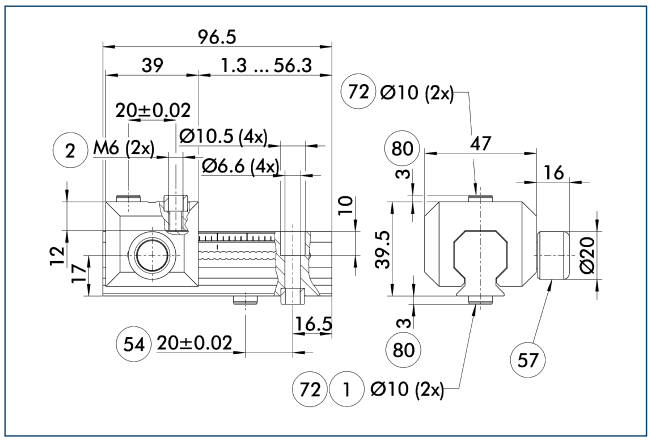

1 Gripper connection
2 Finger connection
54 Optional right or left connection
57 Locking
72 Fit for centering sleeves
80 Depth of the centering sleeve hole in the mating part

The universal intermediate jaw allows fast tool-free and reliable plugging and shifting of top jaws at the gripper.

Description	ID	Grid dimension [mm]
Universal intermediate jaw		
UZB 100	0300044	2.5
UZB-S 100	5518272	2.5
Finger blanks		
ABR-PGZN-plus 100	0300012	
SBR-PGZN-plus 100	0300022	

FMS-ZBA / ZBP 100 force-measuring jaws

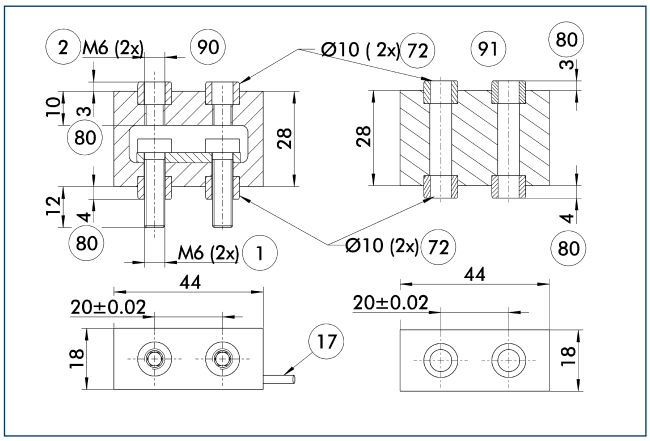

1 Gripper connection
2 Finger connection
17 Cable outlet
72 Fit for centering sleeves
80 Depth of the centering sleeve hole in the mating part
90 Active intermediate jaws
91 Passive intermediate jaws

Force measuring jaws measure gripping forces, but can also determine workpiece weights or dimensional deviations. There are active and passive intermediate jaws (FMS-ZBA or FMS-ZBP). At least one active force measuring jaw is required per gripper, the rest can be passive. For each active jaw, a FMS-A control unit and a FMS-AK connection cable are required.

Description	ID	Often combined
Active intermediate jaws		
FMS-ZBA 100	0301836	
Passive intermediate jaws		
FMS-ZBP 100	0301837	
Connection cables		
FMS-AK0200	0301820	●
FMS-AK0500	0301821	
FMS-AK1000	0301822	
FMS-AK2000	0301823	
Electronic processor		
FMS-A1	0301810	

ABR- / SBR-PGZN-plus 100 finger blanks

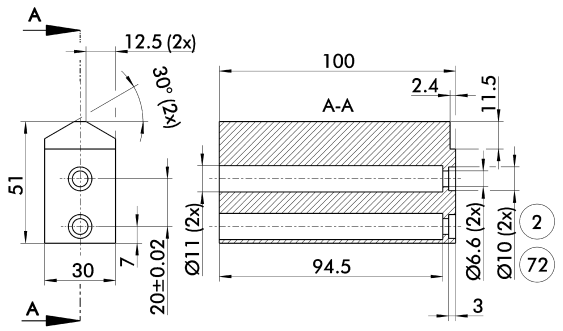

(2) Finger connection (72) Fit for centering sleeves

Finger blanks for customized subsequent machining.

Description	ID	Material	Scope of delivery
Finger blanks			
ABR-PGZN-plus 100	0300012	Aluminum	1
SBR-PGZN-plus 100	0300022	16MnCr5	1

Inductive proximity switches

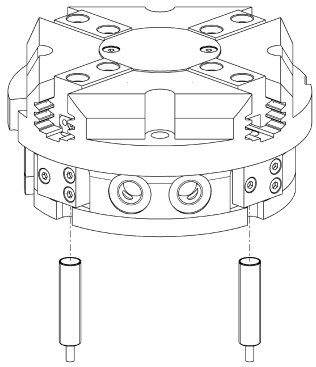

Directly mounted limit position monitor.

Description	ID	Often combined
Inductive proximity switches		
IN 80-S-M12	0301578	
IN 80-S-M8	0301478	●
IN-C 80-S-M8	0301475	
INK 80-S	0301550	
Cable extensions		
KV BG12-SG12 3P-0030-PNP	0301999	
KV BG12-SG12 3P-0060-PNP	0301998	
KV BW08-SG08 3P-0030-PNP	0301495	
KV BW08-SG08 3P-0100-PNP	0301496	
KV BW08-SG08 3P-0200-PNP	0301497	●
KV BW12-SG12 3P-0030-PNP	0301595	
KV BW12-SG12 3P-0100-PNP	0301596	
KV BW12-SG12 3P-0200-PNP	0301597	
Clip for plug / socket		
CLI-M12	0301464	
CLI-M8	0301463	
Connection cables		
KA BG08-L 3P-0300-PNP	0301622	●
KA BG08-L 3P-0500-PNP	0301623	
KA BG12-L 3P-0500-PNP	30016369	
KA BW08-L 3P-0300-PNP	0301594	
KA BW08-L 3P-0500-PNP	0301502	
KA BW12-L 3P-0300-PNP	0301503	
KA BW12-L 3P-0500-PNP	0301507	
Sensor distributor		
V2-M8	0301775	●
V2-M12	0301776	●
V4-M12	0301747	
V4-M8	0301746	
V8-M12	0301752	
V8-M8	0301751	

ⓘ Two sensors (closer/S) are required for each unit, plus extension cables as an option. Please note the minimum permitted bending radii for the sensor cables, which are generally 35 mm.

Flexible position sensor

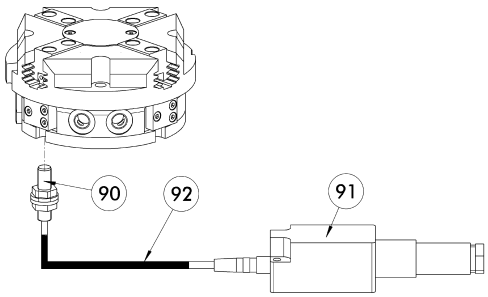

(90) FPS-S sensor
(91) FPS-F5 / -F5 T electronic processor
(92) Cable extensions

Flexible position monitoring of up to five positions.

Description	ID	Often combined
Mounting kit for FPS		
AS-FPS-PGZN-plus 100-1	0301634	
Electronic processor		
FPS-F5	0301805	●
FPS-F5 T	0301807	
Sensor		
FPS-S M8	0301704	
Clip for plug / socket		
CLI-M8	0301463	

ⓘ When using a FPS system, a FPS sensor (FPS-S) and a control unit (FPS-F5 / F5 T) are required for each gripper as well as a mounting kit (AS), if listed. Cable extensions (KV) are available as options in the "Accessories" catalog section.

MMS electronic magnetic switches

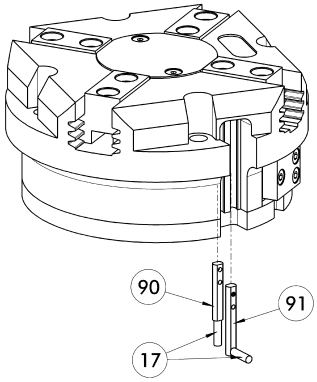

(17) Cable outlet
(90) MMS 22... sensor
(91) MMS 22...-SA sensor

End position monitoring for mounting in the C-slot.

Description	ID	Often combined
MMS electronic magnetic switches		
MMS 22-S-M8-PNP	0301032	●
MMSK 22-S-PNP	0301034	
MMS electronic magnetic switches with lateral cable outlet		
MMS 22-S-M8-PNP-SA	0301042	●
MMSK 22-S-PNP-SA	0301044	
Reed switches		
RMS 22-S-M8	0377720	●
Cable extensions		
KV BW08-SG08 3P-0030-PNP	0301495	
KV BW08-SG08 3P-0100-PNP	0301496	
KV BW08-SG08 3P-0200-PNP	0301497	●
Clip for plug / socket		
CLI-M8	0301463	
Connection cables		
KA BG08-L 3P-0300-PNP	0301622	●
KA BG08-L 3P-0500-PNP	0301623	
KA BW08-L 3P-0300-PNP	0301594	
KA BW08-L 3P-0500-PNP	0301502	
RSS radio sensor system		
RSS-T2	0377710	
Sensor distributor		
V2-M8	0301775	●
V4-M8	0301746	
V8-M8	0301751	

ⓘ Two sensors (closer/S) are required for each unit, plus extension cables as an option. Please note the minimum permitted bending radii for the sensor cables, which are generally 35 mm.

MMS PI1 programmable magnetic switches

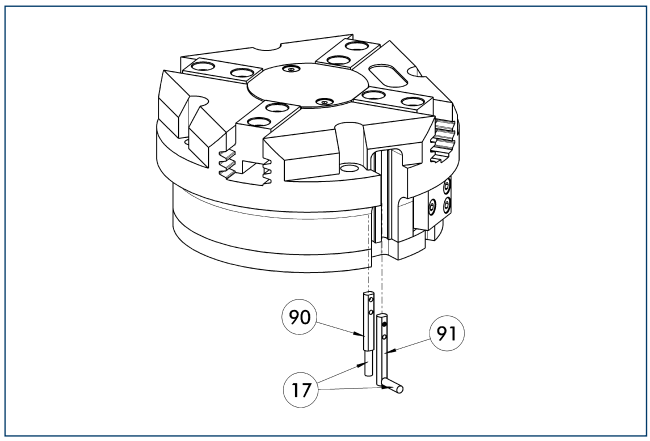

(17) Cable outlet
(91) MMS 22...-PI1-...-SA sensor
(90) MMS 22...-PI1-... sensor

Position query with one programmable position per sensor and electronics integrated in sensor. Programmable via MT magnet teaching tool (included in the scope of delivery) or ST plug teaching tool (optional). Limit position query mounted in C-groove. If the ST plug teaching tools are listed in the table, teaching can only take place with the ST plug teaching tools.

Description	ID	Often combined
Plug teaching tool		
ST-MMS 22-PI1-PNP	0301025	
MMS PI1 programmable magnetic switches		
MMS 22-PI1-S-M8-PNP	0301160	●
MMSK 22-PI1-S-PNP	0301162	
MMS PI1-HD programmable magnetic switches with stainless steel housing		
MMS 22-PI1-S-M8-PNP-HD	0301110	●
MMSK 22-PI1-S-PNP-HD	0301112	
MMS PI1 programmable magnetic switches with lateral cable outlet		
MMS 22-PI1-S-M8-PNP-SA	0301166	●
MMSK 22-PI1-S-PNP-SA	0301168	

ⓘ Two sensors (closer/S) are required for each unit, plus extension cables as an option. Please note the minimum permitted bending radii for the sensor cables, which are generally 35 mm. Connection cable, cable extensions, and sensor distributors can be found in the table for the MMS 22.

MMS PI2 programmable magnetic switches

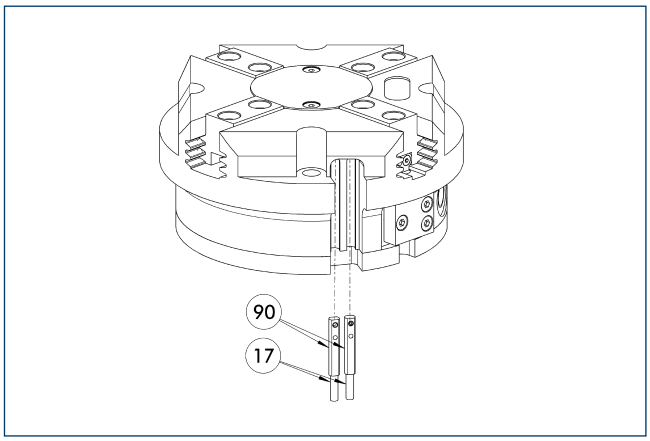

(17) Cable outlet
(90) MMS 22...-PI2-... sensor

Position query with two programmable positions per sensor and electronics integrated in sensor. Programmable via MT magnet teaching tool (included in the scope of delivery) or ST plug teaching tool (optional). Limit position query mounted in C-groove. If the ST plug teaching tools are listed in the table, teaching can only take place with the ST plug teaching tools.

Description	ID	Often combined
Plug teaching tool		
ST-MMS 22-PI2-PNP	0301026	
MMS PI2 programmable magnetic switches		
MMS 22-PI2-S-M8-PNP	0301180	●
MMSK 22-PI2-S-PNP	0301182	
MMS PI2-HD programmable magnetic switches with stainless steel housing		
MMS 22-PI2-S-M8-PNP-HD	0301130	●
MMSK 22-PI2-S-PNP-HD	0301132	

ⓘ Per unit one sensor (closer/S) is required, optionally a cable extension. Please note the minimum permitted bending radii for the sensor cables, which are generally 35 mm. Connection cable, cable extensions, and sensor distributors can be found in the table for the MMS-P 22.

MMS-P programmable magnetic switches

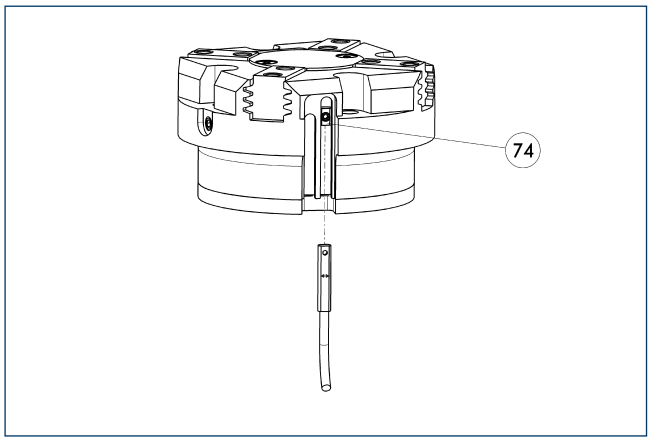

74 Stop for MMS-P

Position monitoring with two programmable positions per sensor. The end position monitoring is mounted in the C-slot.

Description	ID	Often combined
MMS-P programmable magnetic switches		
MMSK-P 22-S-PNP	0301371	
MMS-P 22-S-M8-PNP	0301370	●
Clip for plug / socket		
CLI-M8	0301463	
Connection cables		
KA BG08-L 4P-0500	0307767	●
KA BG08-L 4P-1000	0307768	
KA BW08-L 4P-0500	0307765	
KA BW08-L 4P-1000	0307766	
Sensor distributor		
V2-M8-4P-2XM8-3P	0301380	

ⓘ Per unit one sensor (closer/S) is required, optionally a cable extension. Please note the minimum permitted bending radii for the sensor cables, which are generally 35 mm.

APS-Z80 analog position sensor

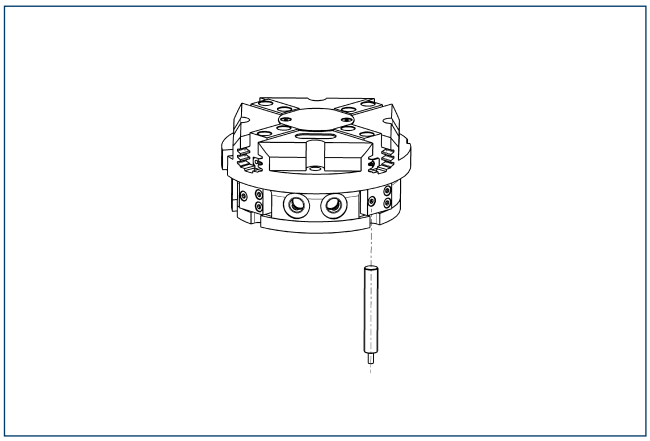

Contactlessly measuring, analog multi-position monitoring for any number of positions.

Description	ID	Often combined
Mounting kit for APS-Z80		
AS-APS-Z80-PGZN-plus 100-1	0302109	
Sensor		
APS-Z80-K	0302072	
APS-Z80-M8	0302070	●

ⓘ When using an APS system, one mounting kit (AS-APS-Z80) and one APS-Z80 sensor is required per gripper.

APS-M1 analog position sensor

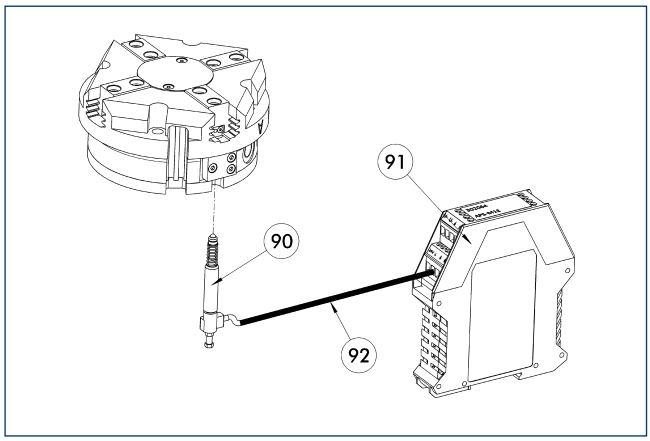

90 APS-M1S sensor
91 APS-M1E electronic processor
92 APS-K extension cable

Analog multi position monitoring for any desired positions.

Description	ID	Often combined
Mounting kit for APS-M1		
AS-APS-M1-PGZN-plus 100-1	0302079	
Connection cables		
APS-K0200	0302066	●
APS-K0700	0302068	
Electronic processor		
APS-M1E	0302064	
Sensor		
APS-M1S	0302062	

ⓘ When using an APS system, for each gripper a mounting kit (AS-APS-M1), an APS-M1S sensor (incl. 3 m cable) as well as an electronics (APS-M1e) are required. An extension cable (APS-K) can be connected between the sensor and the electronics as an option. The max. cable length between the sensor and the electronics is 10 m, between the electronics and their control unit (PLC) it is max. 1 m.

Cylindrical reed switches

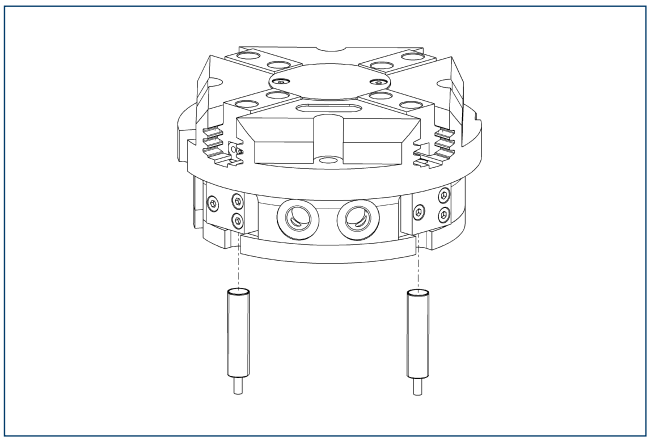

Limit position monitor can be mounted with mounting kit.

Description	ID	
Mounting kit for proximity switch		
AS-RMS 80 PGN/PZN-plus 100/125	0377726	
Reed switches		
RMS 80-S-M8	0377721	

ⓘ Two sensors (closer/S) are required for each unit, plus extension cables as an option. This mounting kit needs to be ordered optionally as an accessory. Two mounting kits are required per gripper. Please note the minimum permitted bending radii for the sensor cables, which are generally 35 mm.

PZV 160

SCHUNK Grippers pneumatic | Multi-finger Centric Grippers | 4-Finger Centric Gripper

Gripping force, O.D. gripping

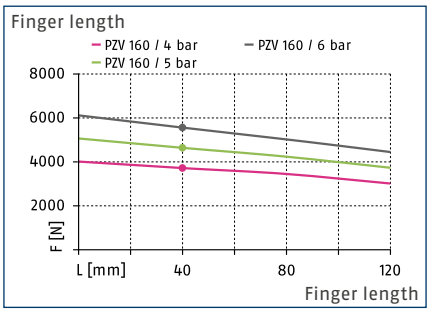

Gripping force, I.D. gripping

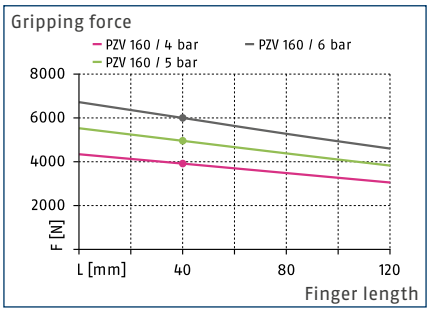

Finger load

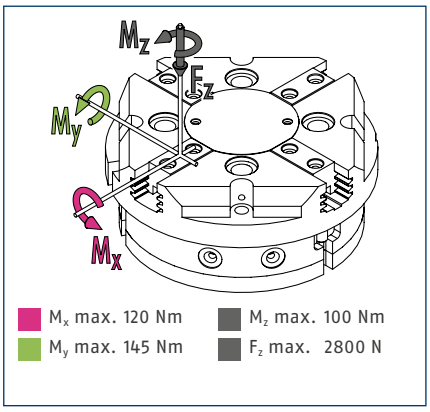

ⓘ The indicated moments and forces are static values, apply per base jaw and may occur simultaneously. M_y may arise in addition to the moment generated by the gripping force itself. If the max. permitted finger weight is exceeded, it is impreative to throttle the air supply so that the jaw movement occurs without any hitting or bouncing. Service life may be reduced.

Technical data

Description		PZV 160
ID		0304004
Stroke per jaw	[mm]	13
Closing- / opening force	[N]	5200/5600
Weight	[kg]	5.5
Recommended workpiece weight	[kg]	26
Fluid consumption per double stroke	[cm³]	520
min. / max. operating pressure	[bar]	2/6
Nominal operating pressure	[bar]	6
Closing- / opening time	[s]	0.1/0.1
max. permitted finger length	[mm]	120
max. permitted weight per finger	[kg]	2.1
IP class		40
min. / max. ambient temperature	[°C]	5/90
Repeat accuracy	[mm]	0.01

ⓘ The pressure must be reduced to a maximum of 5 bar for use of the PZV as a double 2-finger-parallel-gripper.

Main view

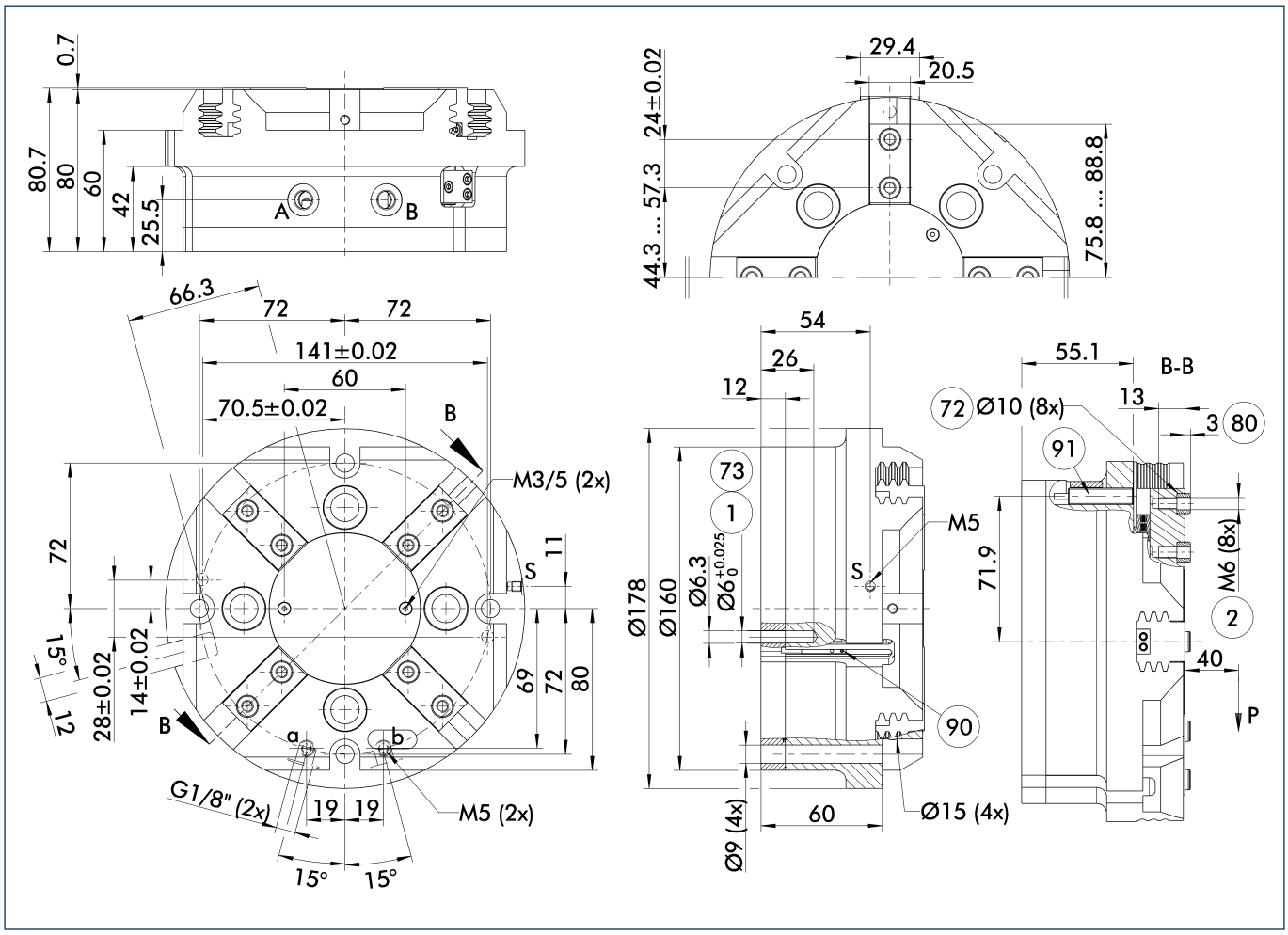

The drawing shows the gripper in the basic version with closed jaws, without dimensional consideration of the options described below.

ⓘ The SDV-P pressure maintenance valve can be used as a gripping force maintenance device (see catalog section on "Accessories").

A, a Main / direct connection, gripper opening

B, b Main / direct connection, gripper closing

S Air purge connection (0.5 ... 1 bar)

(1) Gripper connection

(2) Finger connection

(72) Fit for centering sleeves

(73) Fit for centering pins

(80) Depth of the centering sleeve hole in the mating part

(90) MMS 22... sensor

(91) IN ... sensor

Hose-free direct connection M5

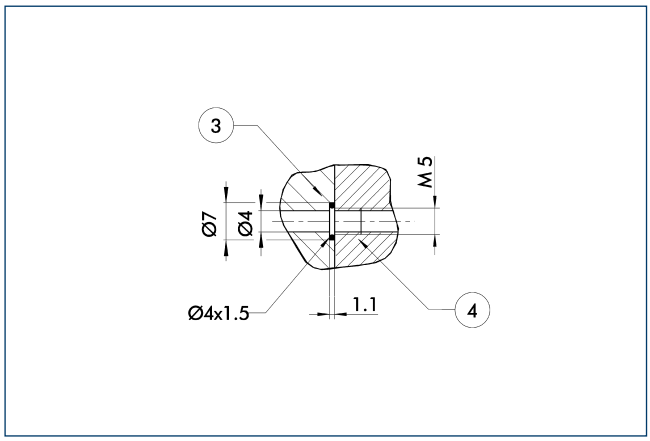

(3) Adapter (4) Gripper

The direct connection is used for supplying compressed air without hoses. Instead, the pressure medium is fed through bore-holes in the mounting plate.

Spring-loaded pressure piece

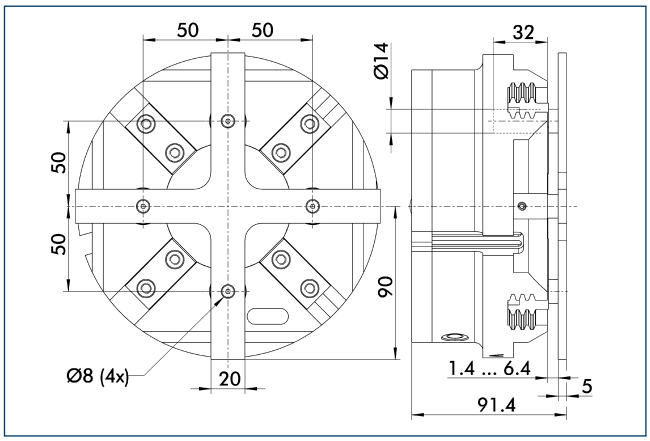

For spring-supported positioning of the workpiece against a stop after the gripper has opened. Especially developed for loading machines.

Description	ID	Stroke [mm]	Min. force [N]
Spring-loaded pressure piece			
A-PZV 160	0304014	5	272

ⓘ The pressure piece cannot be combined with the dust-tight option. Please ask for details about a special pressure piece.

BSWS jaw quick-change systems

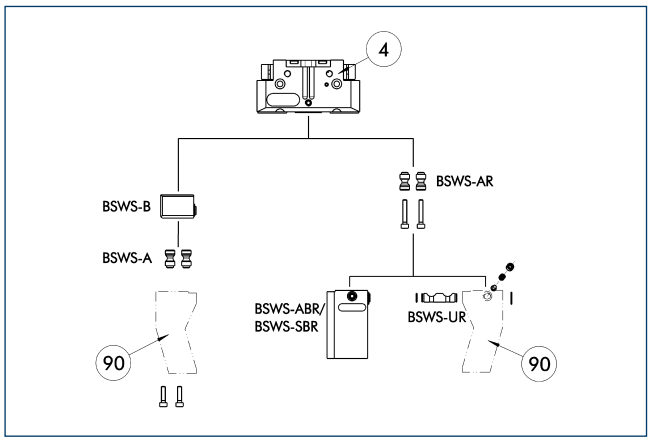

(4) Gripper (90) Customized gripper fingers

There are various jaw quick-change systems available for the grippers. For detailed information, refer to the appropriate product.

Description	ID	
Jaw quick-change system adapter		
BSWS-AR 125	0300095	
BSWS-A 125	0303028	
Jaw quick-change system base		
BSWS-B 125	0303029	
Finger blanks with jaw quick-change system		
BSWS-ABR-PGZN-plus 125	0300075	
BSWS-SBR-PGZN-plus 125	0300085	
Jaw quick-change system reversed		
BSWS-UR 125	0302994	

ⓘ Only the systems listed in the table can be used.

ZBA L-plus 125 intermediate jaws

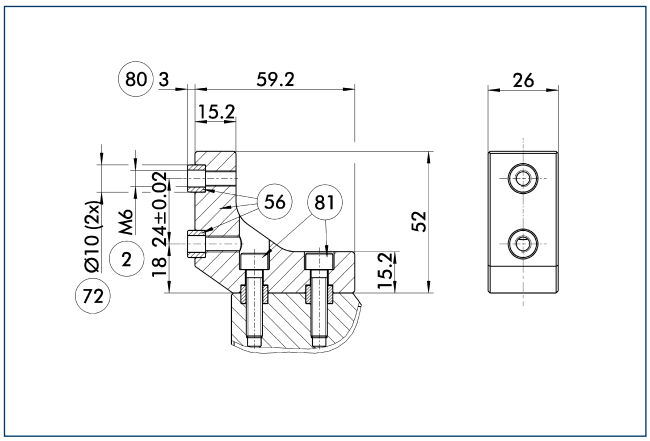

(2) Finger connection
(56) Included in delivery
(72) Fit for centering sleeves
(80) Depth of the centering sleeve hole in the mating part
(81) Not included in the scope of delivery

Optionally intermediate jaws can be used, enabling direct connection and alignment of top jaws and various standard accessories in Z-direction.

Description	ID	Material	Scope of delivery
Intermediate jaws			
ZBA-L-plus 125	0311752	Aluminum	1

UZB 125 universal intermediate jaw

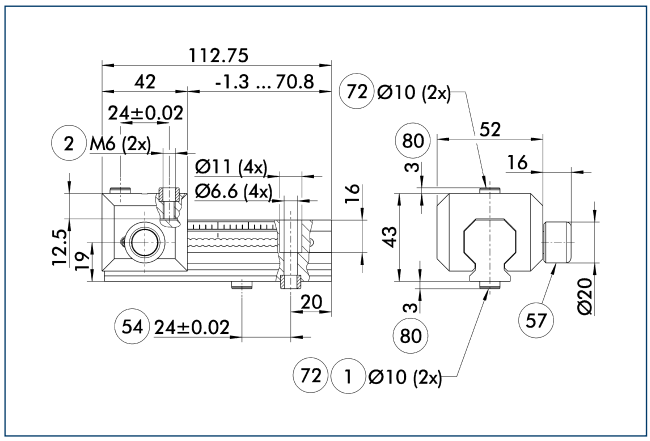

1 Gripper connection
2 Finger connection
54 Optional right or left connection
57 Locking
72 Fit for centering sleeves
80 Depth of the centering sleeve hole in the mating part

The universal intermediate jaw allows fast tool-free and reliable plugging and shifting of top jaws at the gripper.

Description	ID	Grid dimension [mm]
Universal intermediate jaw		
UZB 125	0300045	3
UZB-S 125	5518273	3
Finger blanks		
ABR-PGZN-plus 125	0300013	
SBR-PGZN-plus 125	0300023	

FMS-ZBA / ZBP 125 force-measuring jaws

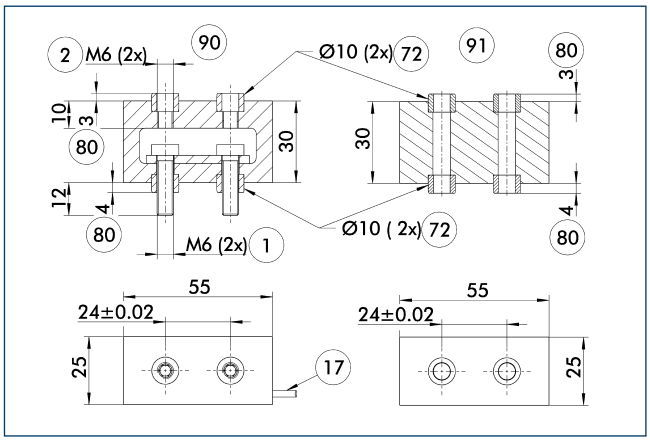

1 Gripper connection
2 Finger connection
17 Cable outlet
72 Fit for centering sleeves
80 Depth of the centering sleeve hole in the mating part
90 Active intermediate jaws
91 Passive intermediate jaws

Force measuring jaws measure gripping forces, but can also determine workpiece weights or dimensional deviations. There are active and passive intermediate jaws (FMS-ZBA or FMS-ZBP). At least one active force measuring jaw is required per gripper, the rest can be passive. For each active jaw, a FMS-A control unit and a FMS-AK connection cable are required.

Description	ID	Often combined
Active intermediate jaws		
FMS-ZBA 125	0301838	
Passive intermediate jaws		
FMS-ZBP 125	0301839	
Connection cables		
FMS-AK0200	0301820	●
FMS-AK0500	0301821	
FMS-AK1000	0301822	
FMS-AK2000	0301823	
Electronic processor		
FMS-A1	0301810	

ABR- / SBR-PGZN-plus 125 finger blanks

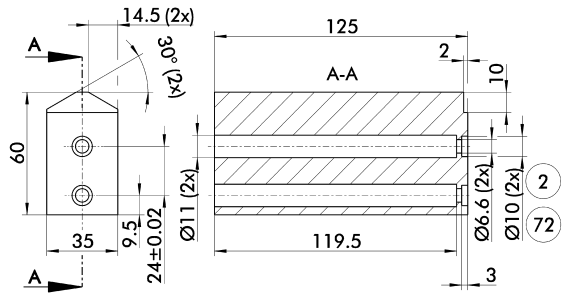

(2) Finger connection (72) Fit for centering sleeves

Finger blanks for customized subsequent machining.

Description	ID	Material	Scope of delivery
Finger blanks			
ABR-PGZN-plus 125	0300013	Aluminum	1
SBR-PGZN-plus 125	0300023	16MnCr5	1

Inductive proximity switches

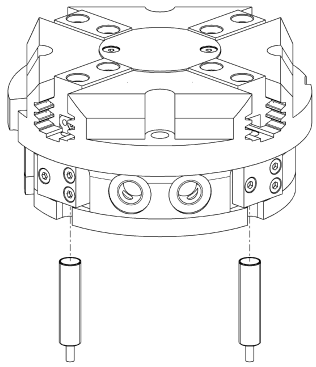

Directly mounted limit position monitor.

Description	ID	Often combined
Inductive proximity switches		
IN 80-S-M12	0301578	
IN 80-S-M8	0301478	●
IN-C 80-S-M8	0301475	
INK 80-S	0301550	
Cable extensions		
KV BG12-SG12 3P-0030-PNP	0301999	
KV BG12-SG12 3P-0060-PNP	0301998	
KV BW08-SG08 3P-0030-PNP	0301495	
KV BW08-SG08 3P-0100-PNP	0301496	
KV BW08-SG08 3P-0200-PNP	0301497	●
KV BW12-SG12 3P-0030-PNP	0301595	
KV BW12-SG12 3P-0100-PNP	0301596	
KV BW12-SG12 3P-0200-PNP	0301597	
Clip for plug / socket		
CLI-M12	0301464	
CLI-M8	0301463	
Connection cables		
KA BG08-L 3P-0300-PNP	0301622	●
KA BG08-L 3P-0500-PNP	0301623	
KA BG12-L 3P-0500-PNP	30016369	
KA BW08-L 3P-0300-PNP	0301594	
KA BW08-L 3P-0500-PNP	0301502	
KA BW12-L 3P-0300-PNP	0301503	
KA BW12-L 3P-0500-PNP	0301507	
Sensor distributor		
V2-M8	0301775	●
V2-M12	0301776	●
V4-M12	0301747	
V4-M8	0301746	
V8-M12	0301752	
V8-M8	0301751	

ⓘ Two sensors (closer/S) are required for each unit, plus extension cables as an option. Please note the minimum permitted bending radii for the sensor cables, which are generally 35 mm.

Flexible position sensor

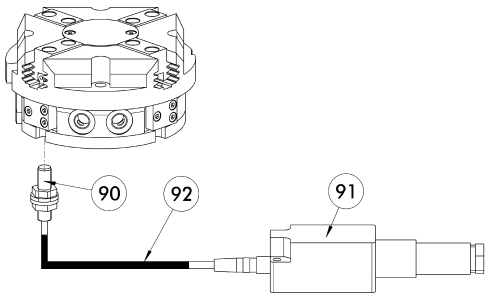

(90) FPS-S sensor
(91) FPS-F5 / -F5 T electronic processor
(92) Cable extensions

Flexible position monitoring of up to five positions.

Description	ID	Often combined
Mounting kit for FPS		
AS-FPS-PGZN-plus 125-1/PZB 160	0301636	
Electronic processor		
FPS-F5	0301805	●
FPS-F5 T	0301807	
Sensor		
FPS-S M8	0301704	
Clip for plug / socket		
CLI-M8	0301463	

ⓘ When using a FPS system, a FPS sensor (FPS-S) and a control unit (FPS-F5 / F5 T) are required for each gripper as well as a mounting kit (AS), if listed. Cable extensions (KV) are available as options in the "Accessories" catalog section.

MMS electronic magnetic switches

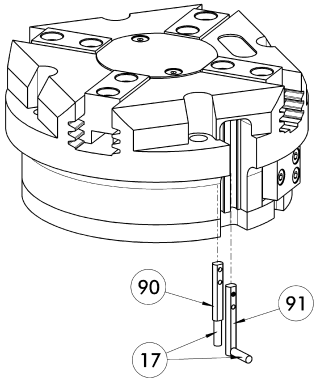

(17) Cable outlet
(90) MMS 22... sensor
(91) MMS 22...-SA sensor

End position monitoring for mounting in the C-slot.

Description	ID	Often combined
MMS electronic magnetic switches		
MMS 22-S-M8-PNP	0301032	●
MMSK 22-S-PNP	0301034	
MMS electronic magnetic switches with lateral cable outlet		
MMS 22-S-M8-PNP-SA	0301042	●
MMSK 22-S-PNP-SA	0301044	
Reed switches		
RMS 22-S-M8	0377720	●
Cable extensions		
KV BW08-SG08 3P-0030-PNP	0301495	
KV BW08-SG08 3P-0100-PNP	0301496	
KV BW08-SG08 3P-0200-PNP	0301497	●
Clip for plug / socket		
CLI-M8	0301463	
Connection cables		
KA BG08-L 3P-0300-PNP	0301622	●
KA BG08-L 3P-0500-PNP	0301623	
KA BW08-L 3P-0300-PNP	0301594	
KA BW08-L 3P-0500-PNP	0301502	
RSS radio sensor system		
RSS-T2	0377710	
Sensor distributor		
V2-M8	0301775	●
V4-M8	0301746	
V8-M8	0301751	

ⓘ Two sensors (closer/S) are required for each unit, plus extension cables as an option. Please note the minimum permitted bending radii for the sensor cables, which are generally 35 mm.

MMS PI1 programmable magnetic switches

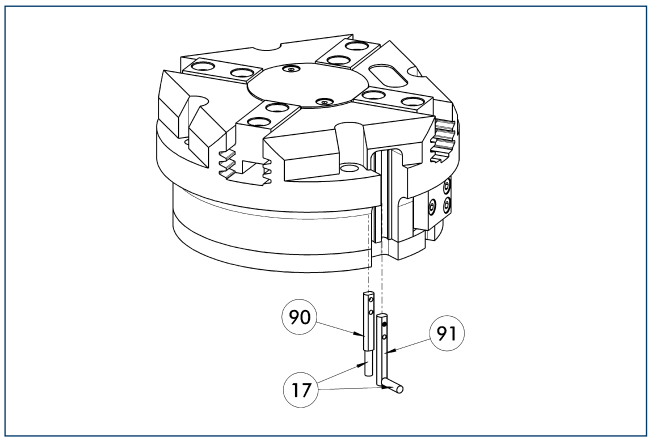

(17) Cable outlet
(91) MMS 22...-PI1-...-SA sensor
(90) MMS 22...-PI1-... sensor

Position query with one programmable position per sensor and electronics integrated in sensor. Programmable via MT magnet teaching tool (included in the scope of delivery) or ST plug teaching tool (optional). Limit position query mounted in C-groove. If the ST plug teaching tools are listed in the table, teaching can only take place with the ST plug teaching tools.

Description	ID	Often combined
Plug teaching tool		
ST-MMS 22-PI1-PNP	0301025	
MMS PI1 programmable magnetic switches		
MMS 22-PI1-S-M8-PNP	0301160	●
MMSK 22-PI1-S-PNP	0301162	
MMS PI1-HD programmable magnetic switches with stainless steel housing		
MMS 22-PI1-S-M8-PNP-HD	0301110	●
MMSK 22-PI1-S-PNP-HD	0301112	
MMS PI1 programmable magnetic switches with lateral cable outlet		
MMS 22-PI1-S-M8-PNP-SA	0301166	●
MMSK 22-PI1-S-PNP-SA	0301168	

ⓘ Two sensors (closer/S) are required for each unit, plus extension cables as an option. Please note the minimum permitted bending radii for the sensor cables, which are generally 35 mm. Connection cable, cable extensions, and sensor distributors can be found in the table for the MMS 22.

MMS PI2 programmable magnetic switches

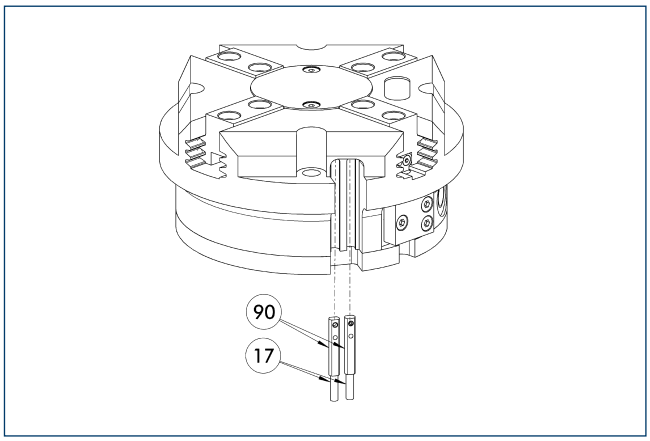

(17) Cable outlet
(90) MMS 22...-PI2-... sensor

Position query with two programmable positions per sensor and electronics integrated in sensor. Programmable via MT magnet teaching tool (included in the scope of delivery) or ST plug teaching tool (optional). Limit position query mounted in C-groove. If the ST plug teaching tools are listed in the table, teaching can only take place with the ST plug teaching tools.

Description	ID	Often combined
Plug teaching tool		
ST-MMS 22-PI2-PNP	0301026	
MMS PI2 programmable magnetic switches		
MMS 22-PI2-S-M8-PNP	0301180	●
MMSK 22-PI2-S-PNP	0301182	
MMS PI2-HD programmable magnetic switches with stainless steel housing		
MMS 22-PI2-S-M8-PNP-HD	0301130	●
MMSK 22-PI2-S-PNP-HD	0301132	

ⓘ Per unit one sensor (closer/S) is required, optionally a cable extension. Please note the minimum permitted bending radii for the sensor cables, which are generally 35 mm. Connection cable, cable extensions, and sensor distributors can be found in the table for the MMS-P 22.

MMS-P programmable magnetic switches

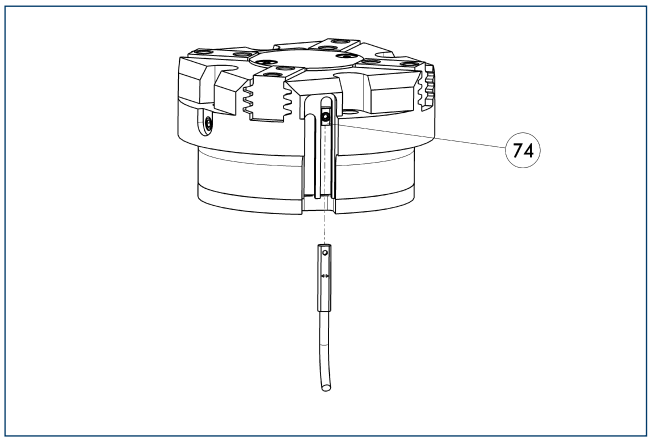

74 Stop for MMS-P

Position monitoring with two programmable positions per sensor. The end position monitoring is mounted in the C-slot.

Description	ID	Often combined
MMS-P programmable magnetic switches		
MMSK-P 22-S-PNP	0301371	
MMS-P 22-S-M8-PNP	0301370	●
Clip for plug / socket		
CLI-M8	0301463	
Connection cables		
KA BG08-L 4P-0500	0307767	●
KA BG08-L 4P-1000	0307768	
KA BW08-L 4P-0500	0307765	
KA BW08-L 4P-1000	0307766	
Sensor distributor		
V2-M8-4P-2XM8-3P	0301380	

ⓘ Per unit one sensor (closer/S) is required, optionally a cable extension. Please note the minimum permitted bending radii for the sensor cables, which are generally 35 mm.

APS-Z80 analog position sensor

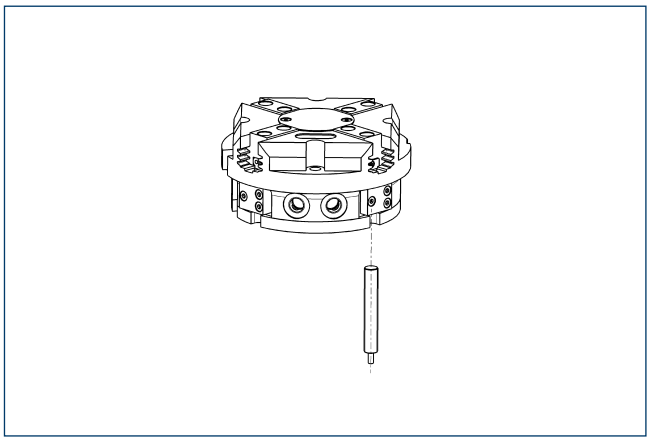

Contactlessly measuring, analog multi-position monitoring for any number of positions.

Description	ID	Often combined
Mounting kit for APS-Z80		
AS-APS-Z80-PGZN-plus 125-1	0302111	
Sensor		
APS-Z80-K	0302072	
APS-Z80-M8	0302070	●

ⓘ When using an APS system, one mounting kit (AS-APS-Z80) and one APS-Z80 sensor is required per gripper.

APS-M1 analog position sensor

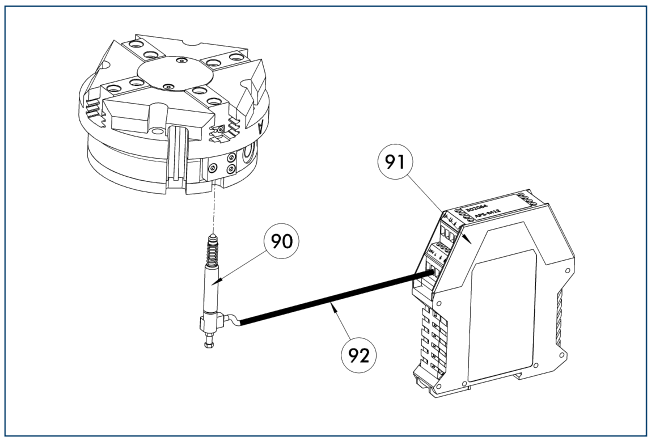

(90) APS-M1S sensor
(91) APS-M1E electronic processor
(92) APS-K extension cable

Analog multi position monitoring for any desired positions.

Description	ID	Often combined
Mounting kit for APS-M1		
AS-APS-M1-PGZN-plus 125-1	0302081	
Connection cables		
APS-K0200	0302066	●
APS-K0700	0302068	
Electronic processor		
APS-M1E	0302064	
Sensor		
APS-M1S	0302062	

ⓘ When using an APS system, for each gripper a mounting kit (AS-APS-M1), an APS-M1S sensor (incl. 3 m cable) as well as an electronics (APS-M1e) are required. An extension cable (APS-K) can be connected between the sensor and the electronics as an option. The max. cable length between the sensor and the electronics is 10 m, between the electronics and their control unit (PLC) it is max. 1 m.

Cylindrical reed switches

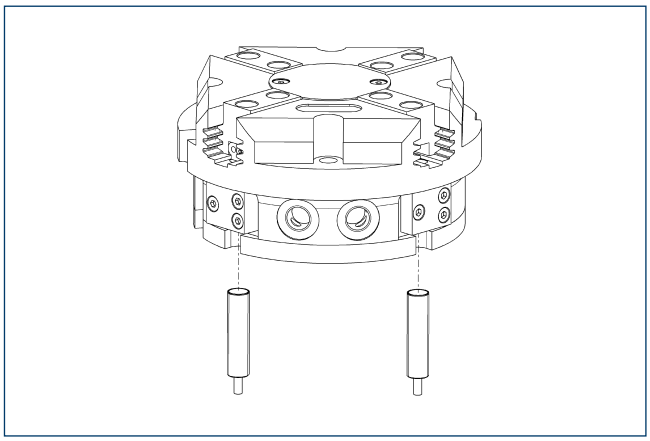

Limit position monitor can be mounted with mounting kit.

Description	ID	
Mounting kit for proximity switch		
AS-RMS 80 PGN/PZN-plus 100/125	0377726	
Reed switches		
RMS 80-S-M8	0377721	

ⓘ Two sensors (closer/S) are required for each unit, plus extension cables as an option. This mounting kit needs to be ordered optionally as an accessory. Two mounting kits are required per gripper. Please note the minimum permitted bending radii for the sensor cables, which are generally 35 mm.

PZV 200

SCHUNK Grippers pneumatic | Multi-finger Centric Grippers | 4-Finger Centric Gripper

Gripping force, I.D. gripping

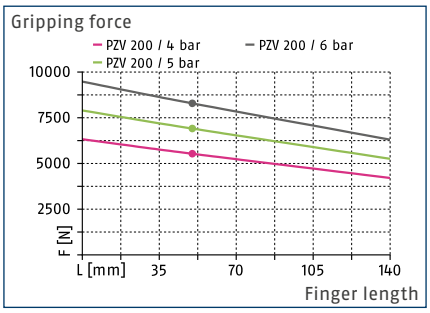

Gripping force, O.D. gripping

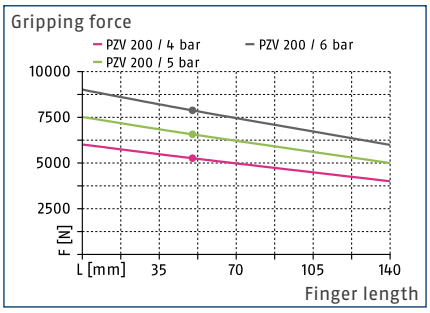

Finger load

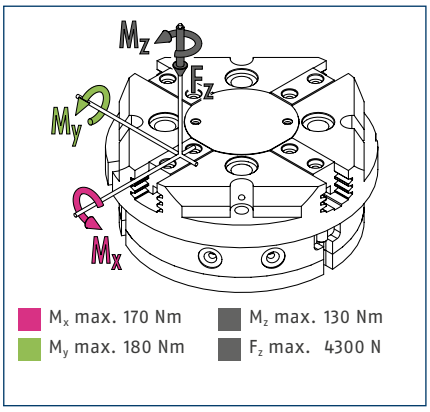

ⓘ The indicated moments and forces are static values, apply per base jaw and may occur simultaneously. M_y may arise in addition to the moment generated by the gripping force itself. If the max. permitted finger weight is exceeded, it is impreative to throttle the air supply so that the jaw movement occurs without any hitting or bouncing. Service life may be reduced.

Technical data

Description		PZV 200
ID		0304005
Stroke per jaw	[mm]	16
Closing- / opening force	[N]	6900/7300
Weight	[kg]	10
Recommended workpiece weight	[kg]	34.5
Fluid consumption per double stroke	[cm³]	1040
min. / max. operating pressure	[bar]	2/6
Nominal operating pressure	[bar]	6
Closing- / opening time	[s]	0.15/0.15
max. permitted finger length	[mm]	140
max. permitted weight per finger	[kg]	3.5
IP class		40
min. / max. ambient temperature	[°C]	5/90
Repeat accuracy	[mm]	0.02

ⓘ The pressure must be reduced to a maximum of 5 bar for use of the PZV as a double 2-finger-parallel-gripper.

Main view

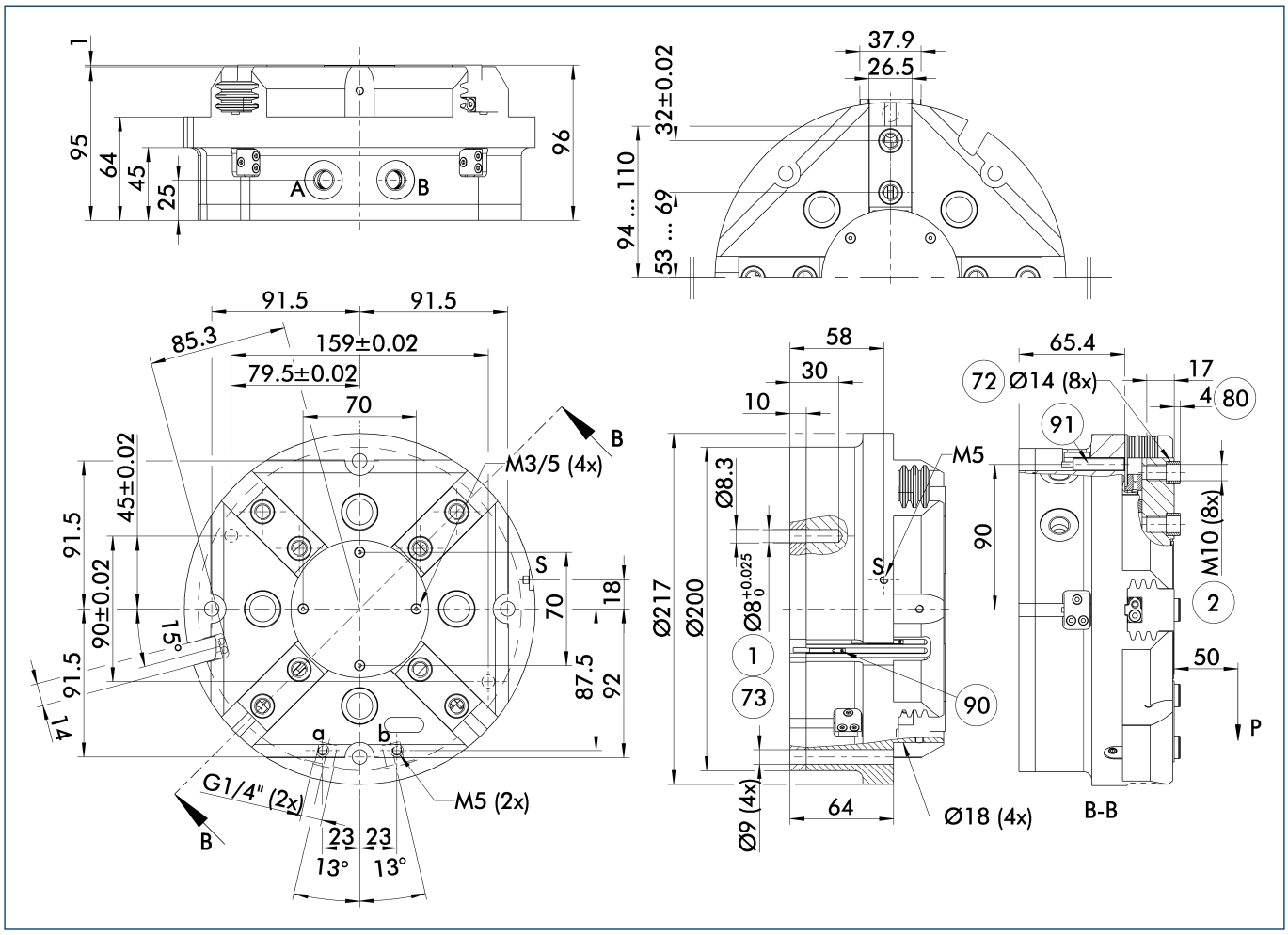

The drawing shows the gripper in the basic version with closed jaws, without dimensional consideration of the options described below.

ⓘ The SDV-P pressure maintenance valve can be used as a gripping force maintenance device (see catalog section on "Accessories").

A, a Main / direct connection, gripper opening

B, b Main / direct connection, gripper closing

S Air purge connection (0.5 ... 1 bar)

(1) Gripper connection

(2) Finger connection

(72) Fit for centering sleeves

(73) Fit for centering pins

(80) Depth of the centering sleeve hole in the mating part

(90) MMS 22... sensor

(91) IN ... sensor

Hose-free direct connection M5

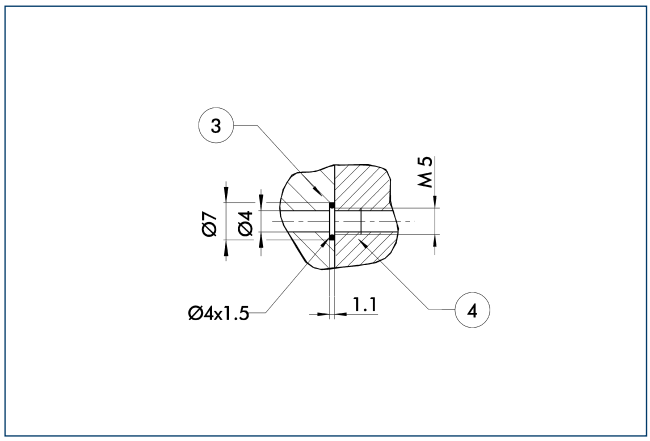

(3) Adapter (4) Gripper

The direct connection is used for supplying compressed air without hoses. Instead, the pressure medium is fed through bore-holes in the mounting plate.

Spring-loaded pressure piece

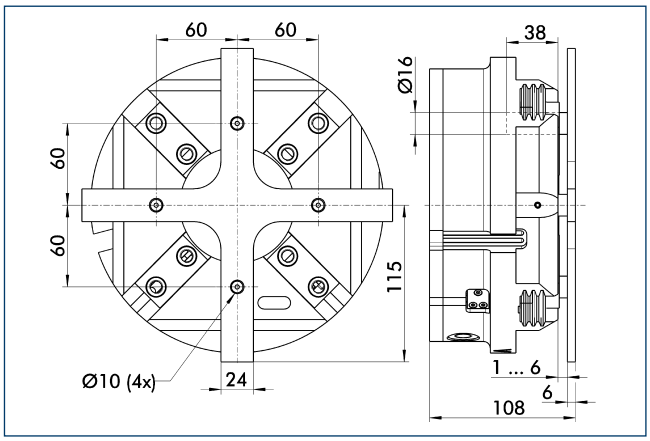

For spring-supported positioning of the workpiece against a stop after the gripper has opened. Especially developed for loading machines.

Description	ID	Stroke [mm]	Min. force [N]
Spring-loaded pressure piece			
A-PZV 200	0304015	5	328

ⓘ The pressure piece cannot be combined with the dust-tight option. Please ask for details about a special pressure piece.

BSWS jaw quick-change systems

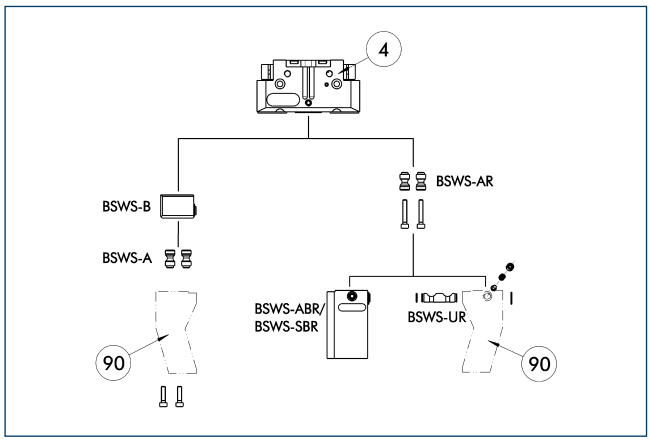

(4) Gripper (90) Customized gripper fingers

There are various jaw quick-change systems available for the grippers. For detailed information, refer to the appropriate product.

Description	ID	
Jaw quick-change system adapter		
BSWS-AR 160	0300096	
BSWS-A 160	0303030	
Jaw quick-change system base		
BSWS-B 160	0303031	
Finger blanks with jaw quick-change system		
BSWS-ABR-PGZN-plus 160	0300076	
BSWS-SBR-PGZN-plus 160	0300086	
Jaw quick-change system reversed		
BSWS-UR 160	0302995	

ⓘ Only the systems listed in the table can be used.

ZBA L-plus 160 intermdiate jaws

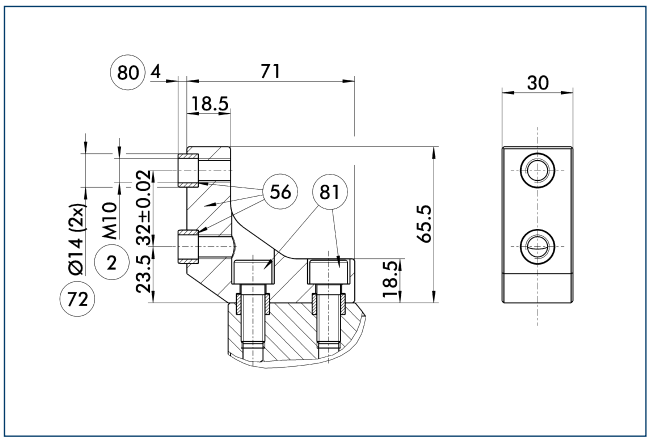

(2) Finger connection
(56) Included in delivery
(72) Fit for centering sleeves
(80) Depth of the centering sleeve hole in the mating part
(81) Not included in the scope of delivery

Optionally intermediate jaws can be used, enabling direct connection and alignment of top jaws and various standard accessories in Z-direction.

Description	ID	Material	Scope of delivery
Intermediate jaws			
ZBA-L-plus 160	0311762	Aluminum	1

UZB 160 universal intermediate jaw

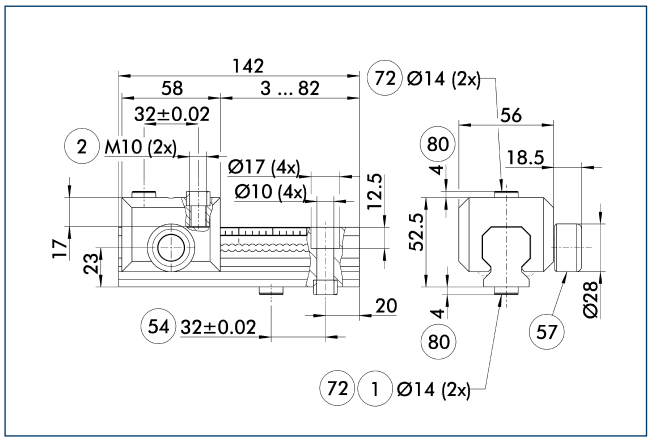

1 Gripper connection
2 Finger connection
54 Optional right or left connection
57 Locking
72 Fit for centering sleeves
80 Depth of the centering sleeve hole in the mating part

The universal intermediate jaw allows fast tool-free and reliable plugging and shifting of top jaws at the gripper.

Description	ID	Grid dimension [mm]
Universal intermediate jaw		
UZB 160	0300046	4
UZB-S 160	5518274	4
Finger blanks		
ABR-PGZN-plus 160	0300014	
SBR-PGZN-plus 160	0300024	

FMS-ZBA / ZBP 160 force-measuring jaws

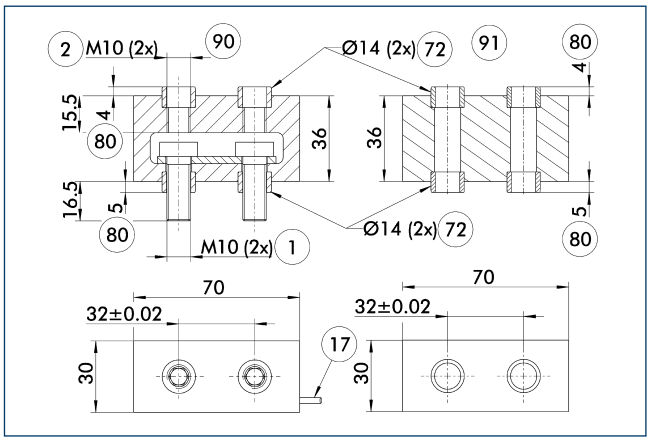

1 Gripper connection
2 Finger connection
17 Cable outlet
72 Fit for centering sleeves
80 Depth of the centering sleeve hole in the mating part
90 Active intermediate jaws
91 Passive intermediate jaws

Force measuring jaws measure gripping forces, but can also determine workpiece weights or dimensional deviations. There are active and passive intermediate jaws (FMS-ZBA or FMS-ZBP). At least one active force measuring jaw is required per gripper, the rest can be passive. For each active jaw, a FMS-A control unit and a FMS-AK connection cable are required.

Description	ID	Often combined
Active intermediate jaws		
FMS-ZBA 160	0301840	
Passive intermediate jaws		
FMS-ZBP 160	0301841	
Connection cables		
FMS-AK0200	0301820	●
FMS-AK0500	0301821	
FMS-AK1000	0301822	
FMS-AK2000	0301823	
Electronic processor		
FMS-A2	0301811	

ABR- / SBR-PGZN-plus 160 finger blanks

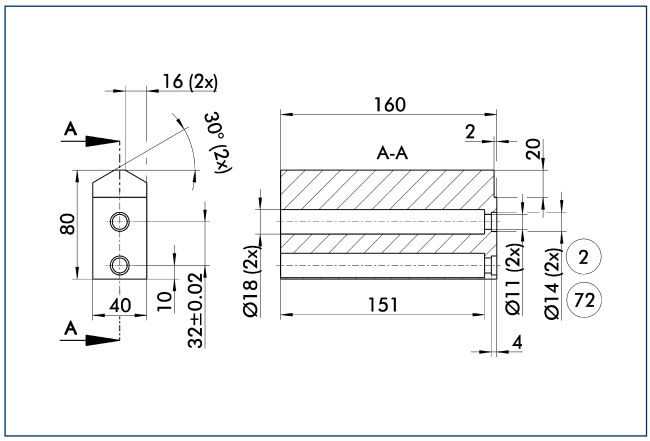

(2) Finger connection (72) Fit for centering sleeves

Finger blanks for customized subsequent machining.

Description	ID	Material	Scope of delivery
Finger blanks			
ABR-PGZN-plus 160	0300014	Aluminum	1
SBR-PGZN-plus 160	0300024	16MnCr5	1

Inductive proximity switches

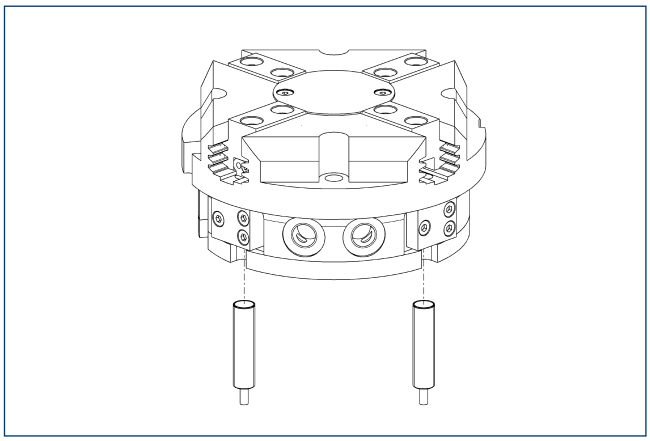

Directly mounted limit position monitor.

Description	ID	Often combined
Inductive proximity switches		
IN 80-S-M12	0301578	
IN 80-S-M8	0301478	●
IN-C 80-S-M8	0301475	
INK 80-S	0301550	
Cable extensions		
KV BG12-SG12 3P-0030-PNP	0301999	
KV BG12-SG12 3P-0060-PNP	0301998	
KV BW08-SG08 3P-0030-PNP	0301495	
KV BW08-SG08 3P-0100-PNP	0301496	
KV BW08-SG08 3P-0200-PNP	0301497	●
KV BW12-SG12 3P-0030-PNP	0301595	
KV BW12-SG12 3P-0100-PNP	0301596	
KV BW12-SG12 3P-0200-PNP	0301597	
Clip for plug / socket		
CLI-M12	0301464	
CLI-M8	0301463	
Connection cables		
KA BG08-L 3P-0300-PNP	0301622	●
KA BG08-L 3P-0500-PNP	0301623	
KA BG12-L 3P-0500-PNP	30016369	
KA BW08-L 3P-0300-PNP	0301594	
KA BW08-L 3P-0500-PNP	0301502	
KA BW12-L 3P-0300-PNP	0301503	
KA BW12-L 3P-0500-PNP	0301507	
Sensor distributor		
V2-M8	0301775	●
V2-M12	0301776	●
V4-M12	0301747	
V4-M8	0301746	
V8-M12	0301752	
V8-M8	0301751	

ⓘ Two sensors (closer/S) are required for each unit, plus extension cables as an option. Please note the minimum permitted bending radii for the sensor cables, which are generally 35 mm.

Flexible position sensor

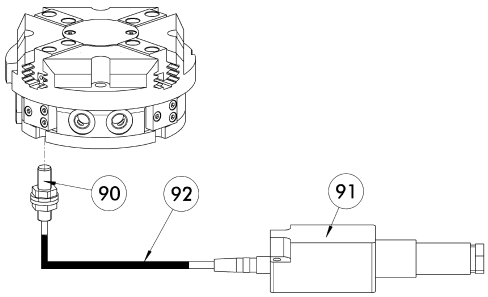

(90) FPS-S sensor
(91) FPS-F5 / -F5 T electronic processor
(92) Cable extensions

Flexible position monitoring of up to five positions.

Description	ID	Often combined
Mounting kit for FPS		
AS-FPS-PGZN-plus 160-1	0301638	
Electronic processor		
FPS-F5	0301805	●
FPS-F5 T	0301807	
Sensor		
FPS-S M8	0301704	
Clip for plug / socket		
CLI-M8	0301463	

ⓘ When using a FPS system, a FPS sensor (FPS-S) and a control unit (FPS-F5 / F5 T) are required for each gripper as well as a mounting kit (AS), if listed. Cable extensions (KV) are available as options in the "Accessories" catalog section.

MMS electronic magnetic switches

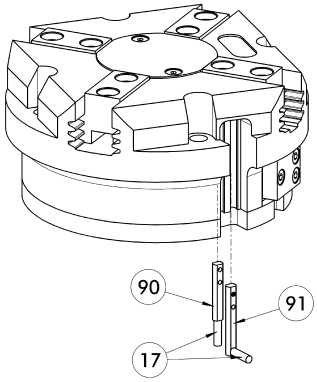

(17) Cable outlet
(90) MMS 22... sensor
(91) MMS 22...-SA sensor

End position monitoring for mounting in the C-slot.

Description	ID	Often combined
MMS electronic magnetic switches		
MMS 22-S-M8-PNP	0301032	●
MMSK 22-S-PNP	0301034	
MMS electronic magnetic switches with lateral cable outlet		
MMS 22-S-M8-PNP-SA	0301042	●
MMSK 22-S-PNP-SA	0301044	
Reed switches		
RMS 22-S-M8	0377720	●
Cable extensions		
KV BW08-SG08 3P-0030-PNP	0301495	
KV BW08-SG08 3P-0100-PNP	0301496	
KV BW08-SG08 3P-0200-PNP	0301497	●
Clip for plug / socket		
CLI-M8	0301463	
Connection cables		
KA BG08-L 3P-0300-PNP	0301622	●
KA BG08-L 3P-0500-PNP	0301623	
KA BW08-L 3P-0300-PNP	0301594	
KA BW08-L 3P-0500-PNP	0301502	
RSS radio sensor system		
RSS-T2	0377710	
Sensor distributor		
V2-M8	0301775	●
V4-M8	0301746	
V8-M8	0301751	

ⓘ Two sensors (closer/S) are required for each unit, plus extension cables as an option. Please note the minimum permitted bending radii for the sensor cables, which are generally 35 mm.

MMS PI1 programmable magnetic switches

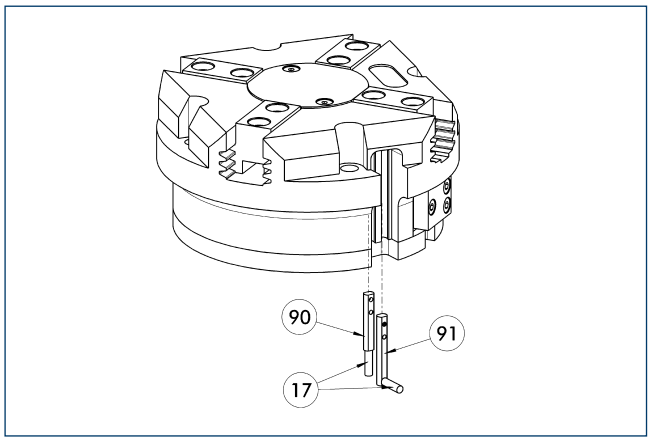

(17) Cable outlet
(91) MMS 22...-PI1-...-SA sensor
(90) MMS 22...-PI1-... sensor

Position query with one programmable position per sensor and electronics integrated in sensor. Programmable via MT magnet teaching tool (included in the scope of delivery) or ST plug teaching tool (optional). Limit position query mounted in C-groove. If the ST plug teaching tools are listed in the table, teaching can only take place with the ST plug teaching tools.

Description	ID	Often combined
MMS PI1 programmable magnetic switches		
MMS 22-PI1-S-M8-PNP	0301160	●
MMSK 22-PI1-S-PNP	0301162	
MMS PI1-HD programmable magnetic switches with stainless steel housing		
MMS 22-PI1-S-M8-PNP-HD	0301110	●
MMSK 22-PI1-S-PNP-HD	0301112	
MMS PI1 programmable magnetic switches with lateral cable outlet		
MMS 22-PI1-S-M8-PNP-SA	0301166	●
MMSK 22-PI1-S-PNP-SA	0301168	

ⓘ Two sensors (closer/S) are required for each unit, plus extension cables as an option. Please note the minimum permitted bending radii for the sensor cables, which are generally 35 mm. Connection cable, cable extensions, and sensor distributors can be found in the table for the MMS 22.

MMS PI2 programmable magnetic switches

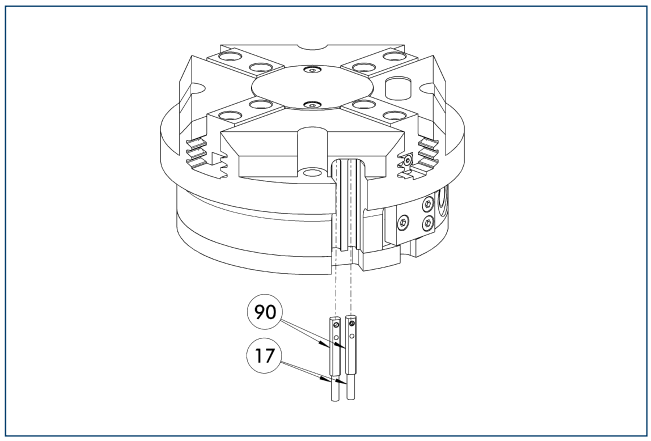

(17) Cable outlet
(90) MMS 22...-PI2-... sensor

Position query with two programmable positions per sensor and electronics integrated in sensor. Programmable via MT magnet teaching tool (included in the scope of delivery) or ST plug teaching tool (optional). Limit position query mounted in C-groove. If the ST plug teaching tools are listed in the table, teaching can only take place with the ST plug teaching tools.

Description	ID	Often combined
MMS PI2 programmable magnetic switches		
MMS 22-PI2-S-M8-PNP	0301180	●
MMSK 22-PI2-S-PNP	0301182	
MMS PI2-HD programmable magnetic switches with stainless steel housing		
MMS 22-PI2-S-M8-PNP-HD	0301130	●
MMSK 22-PI2-S-PNP-HD	0301132	

ⓘ Per unit one sensor (closer/S) is required, optionally a cable extension. Please note the minimum permitted bending radii for the sensor cables, which are generally 35 mm. Connection cable, cable extensions, and sensor distributors can be found in the table for the MMS-P 22.

MMS-P programmable magnetic switches

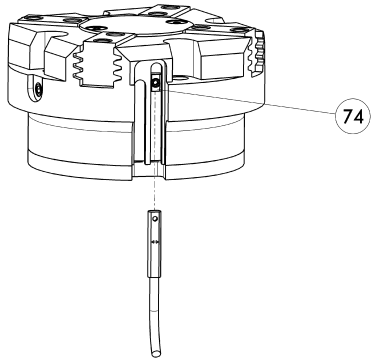

74 Stop for MMS-P

Position monitoring with two programmable positions per sensor. The end position monitoring is mounted in the C-slot.

Description	ID	Often combined
MMS-P programmable magnetic switches		
MMSK-P 22-S-PNP	0301371	
MMS-P 22-S-M8-PNP	0301370	●
Clip for plug / socket		
CLI-M8	0301463	
Connection cables		
KA BG08-L 4P-0500	0307767	●
KA BG08-L 4P-1000	0307768	
KA BW08-L 4P-0500	0307765	
KA BW08-L 4P-1000	0307766	
Sensor distributor		
V2-M8-4P-2XM8-3P	0301380	

ⓘ Per unit one sensor (closer/S) is required, optionally a cable extension. Please note the minimum permitted bending radii for the sensor cables, which are generally 35 mm.

APS-Z80 analog position sensor

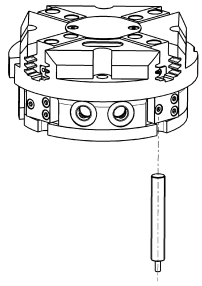

Contactlessly measuring, analog multi-position monitoring for any number of positions.

Description	ID	Often combined
Mounting kit for APS-Z80		
AS-APS-Z80-PGZN-plus 160-1/200-2/240-2	0302113	
Sensor		
APS-Z80-K	0302072	
APS-Z80-M8	0302070	●

ⓘ When using an APS system, one mounting kit (AS-APS-Z80) and one APS-Z80 sensor is required per gripper.

APS-M1 analog position sensor

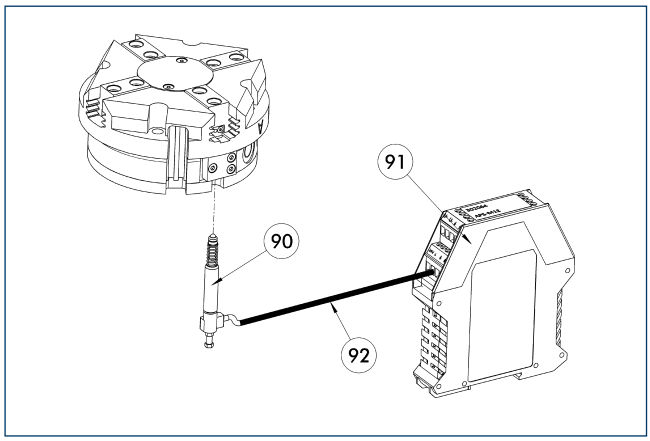

(90) APS-M1S sensor
(91) APS-M1E electronic processor
(92) APS-K extension cable

Analog multi position monitoring for any desired positions.

Description	ID	Often combined
Mounting kit for APS-M1		
AS-APS-M1-PGZN-plus 160-1/240-2	0302083	
Connection cables		
APS-K0200	0302066	●
APS-K0700	0302068	
Electronic processor		
APS-M1E	0302064	
Sensor		
APS-M1S	0302062	

ⓘ When using an APS system, for each gripper a mounting kit (AS-APS-M1), an APS-M1S sensor (incl. 3 m cable) as well as an electronics (APS-M1e) are required. An extension cable (APS-K) can be connected between the sensor and the electronics as an option. The max. cable length between the sensor and the electronics is 10 m, between the electronics and their control unit (PLC) it is max. 1 m.

Cylindrical reed switches

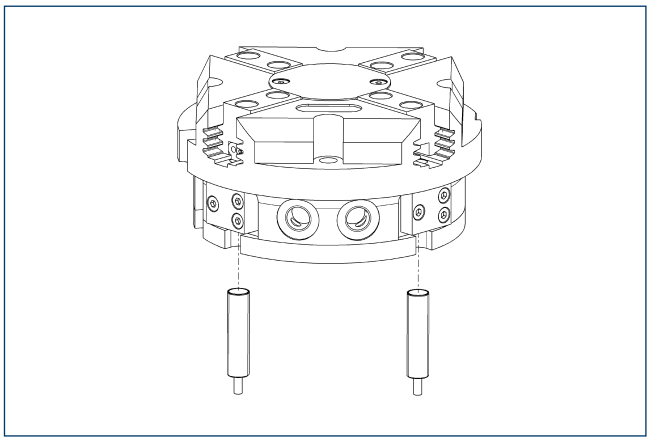

Limit position monitor can be mounted with mounting kit.

Description	ID	
Mounting kit for proximity switch		
AS-RMS 80 PGN/PZN-plus 160-380	0377727	
Reed switches		
RMS 80-S-M8	0377721	

ⓘ Two sensors (closer/S) are required for each unit, plus extension cables as an option. This mounting kit needs to be ordered optionally as an accessory. Two mounting kits are required per gripper. Please note the minimum permitted bending radii for the sensor cables, which are generally 35 mm.

Compact Powerhouses with Oval Piston Drive and high-strength Aluminum Housing.

2-Finger Angular Grippers pneumatic

SGB Small Components Gripper

Series	Sizes
SGB	
SGB	32

Series	Sizes
SGB	40
SGB	50

For more informationen on this product please visit **www.schunk.com**.

SWG Small Components Gripper

Series	Sizes	Page
SWG		1144
SWG	10	1148
SWG	12	1152
SWG	16	1156
SWG	20	1162

Series	Sizes	Page
SWG	25	1168
SWG	32	1174
SWG	40	1180
SWG	50	1186

PWG-plus Universal Gripper

Series	Sizes	Page
PWG-plus		1192
PWG-plus	50	1198
PWG-plus	64	1208
PWG-plus	80	1220
PWG-plus	100	1230

Series	Sizes	Page
PWG-plus	125	1242
PWG-plus	160	1252
PWG-plus	200	1262
PWG-plus	240	1272

Slim. Reliable. Fast.

SWG Small Components Gripper

Narrow double-acting 2-finger angular gripper.

Field of Application

For universal use in clean and slightly dirty environments. Suitable for applications requiring space-saving gripper assemblies.

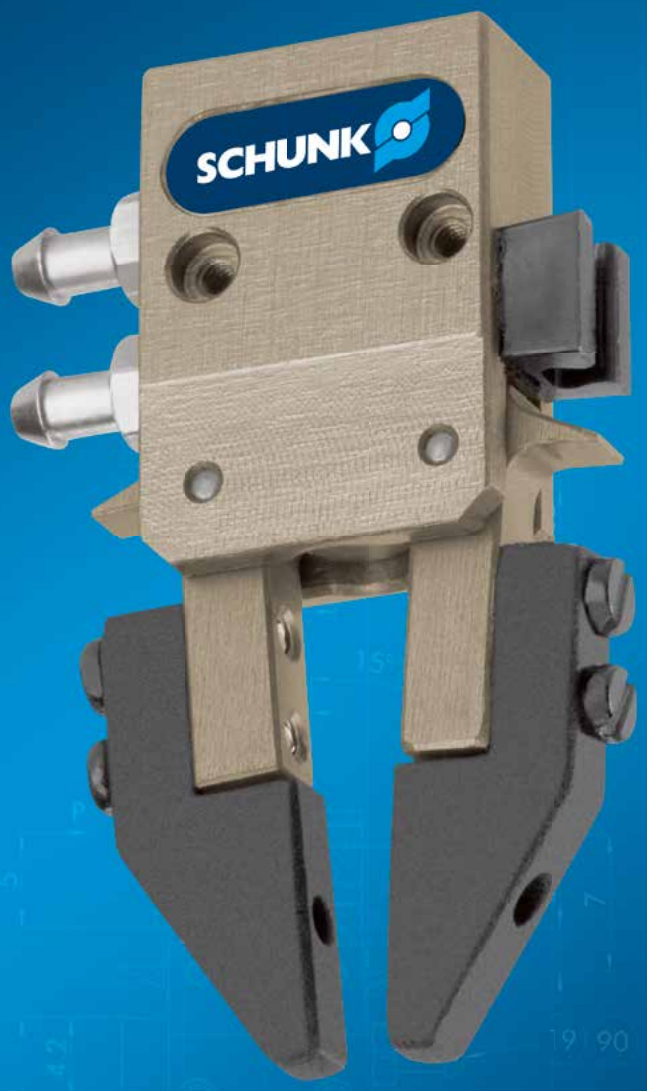

Advantages – Your benefit

Slim design allowing the grippers to be arranged in a row

Spring-assisted gripping force maintenance holds the workpiece even in case of a loss of pressure

Wedge-hook design for high power transmission and synchronized gripping

Light, compact design for space-saving handling without interfering contours

Monitoring via electronic magnetic switches a space-saving feature in a slot in the housing

Sizes	Weight	Gripping moment	Angle per jaw	Workpiece weight
Quantity: 8	0.0025 .. 0.213 kg	0.01 .. 2.8 Nm	15°	0.007 .. 0.46 kg

Functional Description

The piston is moved up and down by compressed air. The kinematics transforms this vertical motion into a synchronous and rotatory gripping motion of the base jaws.

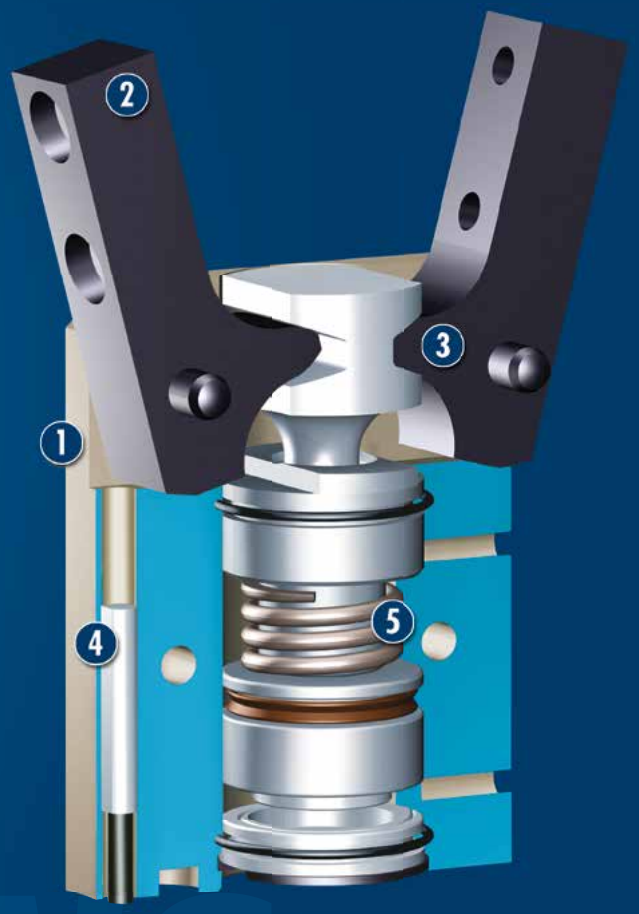

① **Housing**
Weight-optimized through application of high-strength aluminum alloy

② **Base jaws**
for the connection of workpiece-specific gripper fingers

③ **Kinematics**
Precise gear for centric gripping

④ **Sensor system**
Electronic magnetic switch, space-saving integration in the groove of the housing

⑤ **Gripping force maintenance device**
Mechanic gripping force maintenance for O.D. gripping

CAD data, operating manuals and other current product documents are available at **www.schunk.com**

General Notes about the Series

Operating principle: double-acting, guided kinematics

Housing material: Aluminum alloy, anodized

Base jaw material: Aluminum alloy, anodized

Actuation: pneumatic, with filtered compressed air as per DIN ISO 8573-1: 7 4 4

Warranty: 24 months (details, general terms and conditions and operating manuals can be downloaded at www.schunk.com)

Scope of delivery: Swivel fittings, centering sleeves, assembly and operating manual with manufacturers declaration

Gripping force maintenance device: always integrated, also possible via SDV-P pressure maintenance valve

Gripping moment: gripping moment is the arithmetic total of gripping moments for each claw jaw.

Finger length: is measured from the upper edge of the gripper housing in direction to the main axis. If the max. admissible finger length is exceeded, the speed of jaw motions have to be reduced and / or the opening angle has to be diminished, as it is done with heavy fingers. The service life of the gripper can shorten.

Repeat accuracy: is defined as the spread of the limit position after 100 consecutive strokes.

Workpiece weight: is calculated for a force-fit connection with a coefficient of friction of 0.1 and a safety factor of 2 against slippage of the workpiece on acceleration due to gravity g. Considerably heavier workpiece weights are permitted with form-fit gripping.

Closing and opening times: are purely the times that the base jaws or fingers are in motion. Valve switching times, hose filling times or PLC reaction times are not included in the above times and must be taken into consideration when determining cycle times.

Application example

Triple transfer unit for packaging with small boxboards

1. SWG 2-Finger Angular Gripper
2. OPR Collision Sensor

SCHUNK offers more ...

The following components make the product SWG even more productive – the suitable addition for the highest functionality, flexibility, reliability, and controlled production.

Centering Sleeves

Fittings

SDV-P Pressure Maintenance Valve

Magnetic Switches

Sensor Distributor

Gripper Pads

Sensor Cables

Plastic Inserts

ⓘ Further information regarding the products can be found on the following product pages or at www.schunk.com. Please contact us for further information: SCHUNK technical hotline +49-7133-103-2696

Options and special Information

The angular gripper SWG can be directly mounted together in a row to reduce interfering contours.

SWG 10

SCHUNK Grippers pneumatic | 2-Finger Angular Grippers | Small Components Gripper

Gripping force, O.D. gripping

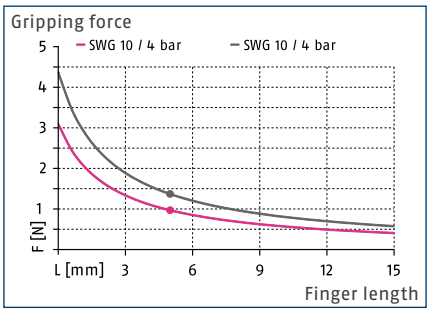

Closing torque curve**

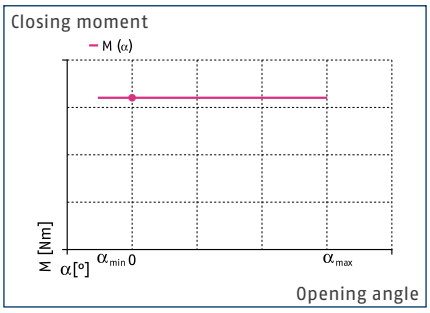

Finger load

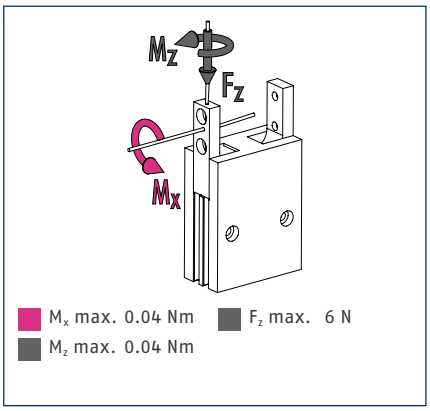

ⓘ The indicated moments and forces are statical values, apply for each base jaw and should not appear simultaneously. If the max. permitted finger weight is exceeded, it is impreative to throttle the air supply so that the jaw movement occurs without any hitting or bouncing. Service life may be reduced.

Technical data

Description		SWG 10
ID		0305116
Opening angle per jaw	[°]	15
Closed angle per jaw up to	[°]	7
Closing moment	[Nm]	0.01
Spring-actuated closing moment	[Nm]	0.0027
Weight	[kg]	0.0025
Recommended workpiece weight	[kg]	0.007
Fluid consumption per double stroke	[cm³]	0.055
min. / max. operating pressure	[bar]	4/6.5
Nominal operating pressure	[bar]	6
Closing- / opening time	[s]	0.015/0.02
max. permitted finger length	[mm]	10
max. permitted weight per finger	[kg]	0.003
IP class		30
min. / max. ambient temperature	[°C]	5/90
Repeat accuracy	[mm]	0.05

**The diagramm is valid for all opening angle variants.

Main view

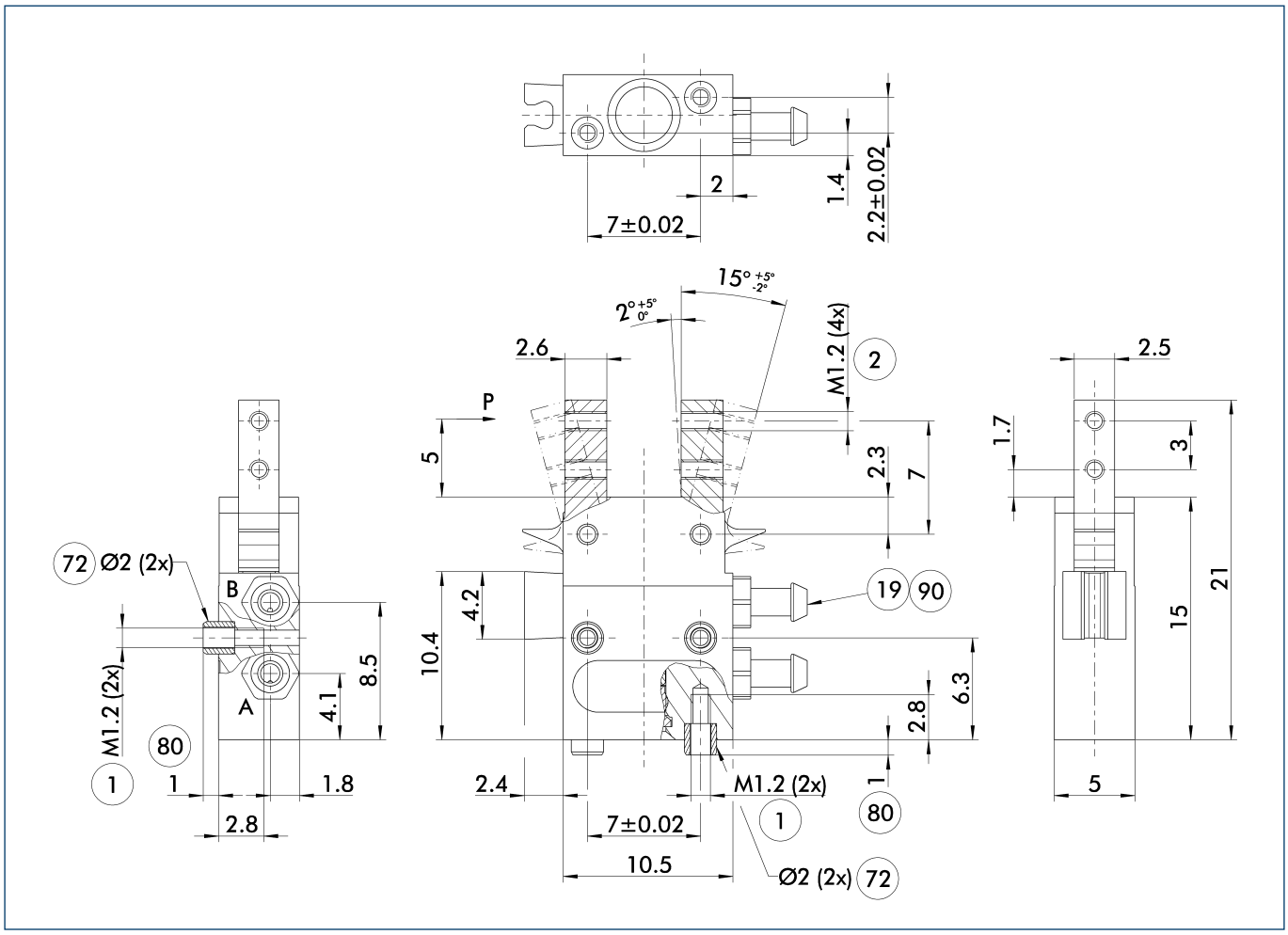

The drawing shows the gripper in the basic version with closed jaws, without dimensional consideration of the options described below.

ⓘ The SDV-P pressure maintenance valve can be used as a gripping force maintenance device (see catalog section on "Accessories").

A, a Main / direct connection, gripper opening

B, b Main / direct connection, gripper closing

(1) Gripper connection

(2) Finger connection

(19) Air connection

(72) Fit for centering sleeves

(80) Depth of the centering sleeve hole in the mating part

(90) Aventics compressed air hose, TU1-S (Ø 3.0 – 0.6) series, Order no.: 1820712066 (-67/-68/-69)

Maximum permitted finger projection

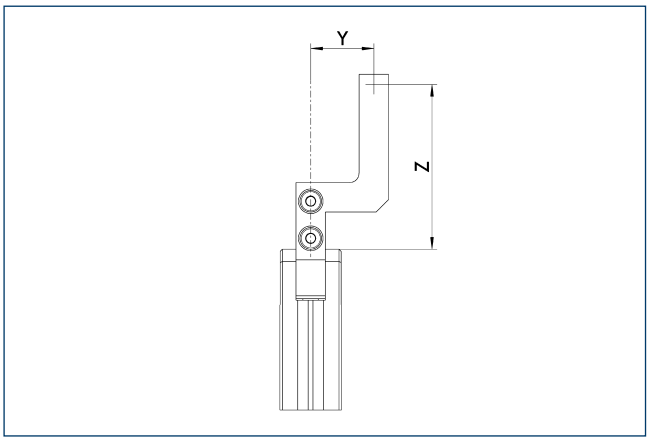

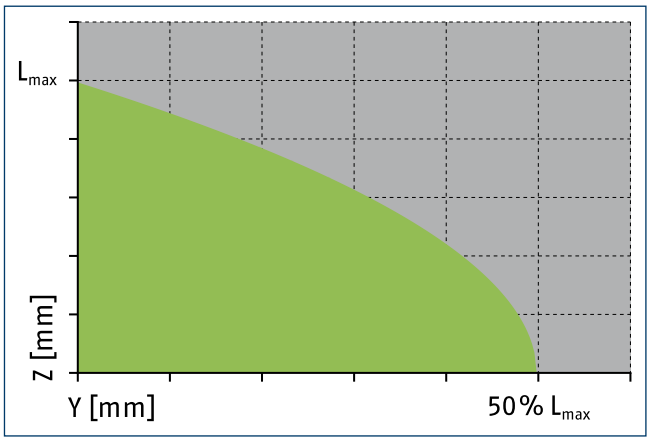

Permitted range Inadmissible range

L_{max} is equivalent to the maximum permitted finger length, see the chart of technical specifications.

SDV-P pressure maintenance valve

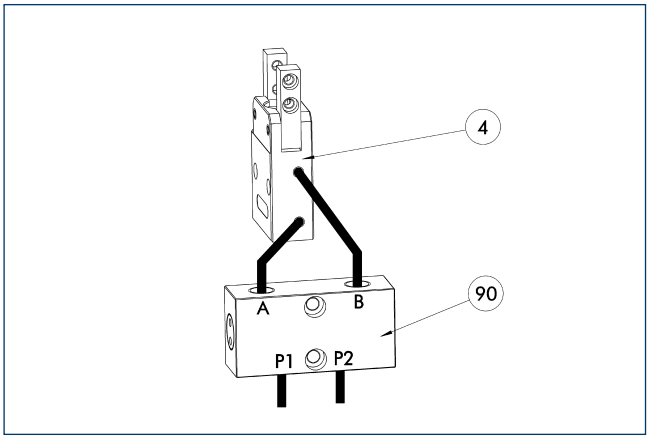

(4) Gripper (90) SDV-P pressure maintenance valve

The SDV-P pressure maintenance valves ensure that the pressure in the piston chamber of pneumatic gripping, rotary, linear, and quick-change modules is maintained temporarily during an emergency stop.

Description	ID	
Pressure maintenance valve		
SDV-P 04	0403130	

Optical proximity switch

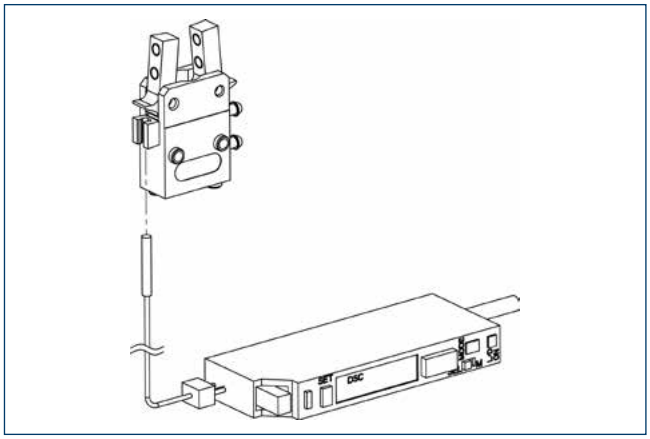

Description	ID	
Optical proximity switch		
ONS 01	0301390	
Optical wave guide		
ONS 01-LWL	0301391	

ⓘ Per each unit a sensor (ONS 01) as well as an optical wave guide (ONS 01-LWL) are required. Assembly of the optical sensors at the gripper is done with the supplied plastic clip.

SWG 12

SCHUNK Grippers pneumatic | 2-Finger Angular Grippers | Small Components Gripper

Gripping force, O.D. gripping

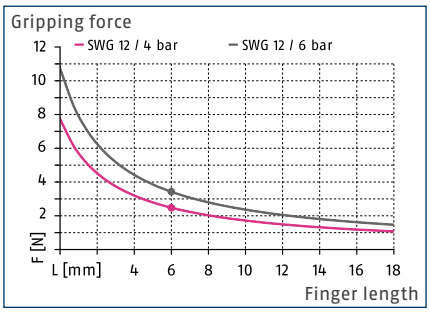

Closing torque curve**

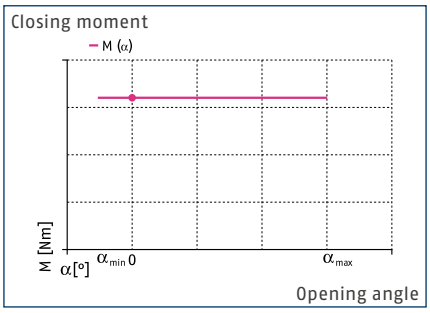

Finger load

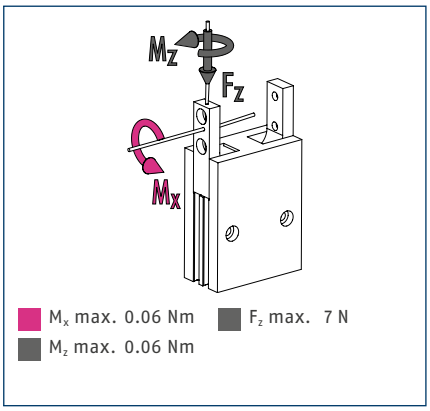

ⓘ The indicated moments and forces are statical values, apply for each base jaw and should not appear simultaneously. If the max. permitted finger weight is exceeded, it is impreative to throttle the air supply so that the jaw movement occurs without any hitting or bouncing. Service life may be reduced.

Technical data

Description		SWG 12
ID		0305115
Opening angle per jaw	[°]	15
Closed angle per jaw up to	[°]	7
Closing moment	[Nm]	0.03
Spring-actuated closing moment	[Nm]	0.009
Weight	[kg]	0.0048
Recommended workpiece weight	[kg]	0.017
Fluid consumption per double stroke	[cm³]	0.07
min. / max. operating pressure	[bar]	4/6.5
Nominal operating pressure	[bar]	6
Closing- / opening time	[s]	0.015/0.02
max. permitted finger length	[mm]	12
max. permitted weight per finger	[kg]	0.006
IP class		30
min. / max. ambient temperature	[°C]	5/90
Repeat accuracy	[mm]	0.05

**The diagramm is valid for all opening angle variants.

Main view

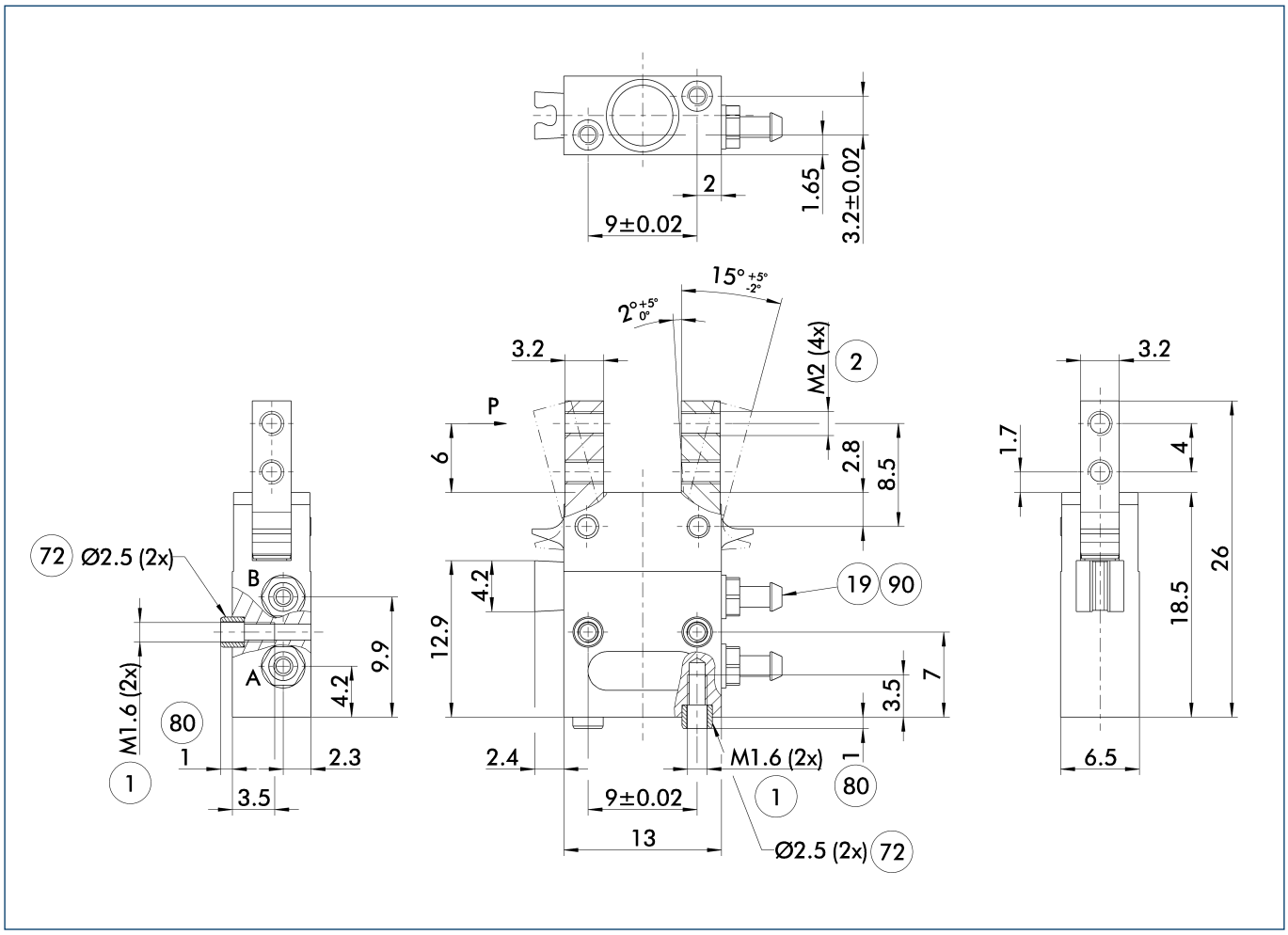

The drawing shows the gripper in the basic version with closed jaws, without dimensional consideration of the options described below.

ⓘ The SDV-P pressure maintenance valve can be used as a gripping force maintenance device (see catalog section on "Accessories").

A, a Main / direct connection, gripper opening

B, b Main / direct connection, gripper closing

(1) Gripper connection

(2) Finger connection

(19) Air connection

(72) Fit for centering sleeves

(80) Depth of the centering sleeve hole in the mating part

(90) Aventics compressed air hose, TU1-S (Ø 3.0 – 0.6) series, Order no.: 1820712066 (-67/-68/-69)

Maximum permitted finger projection

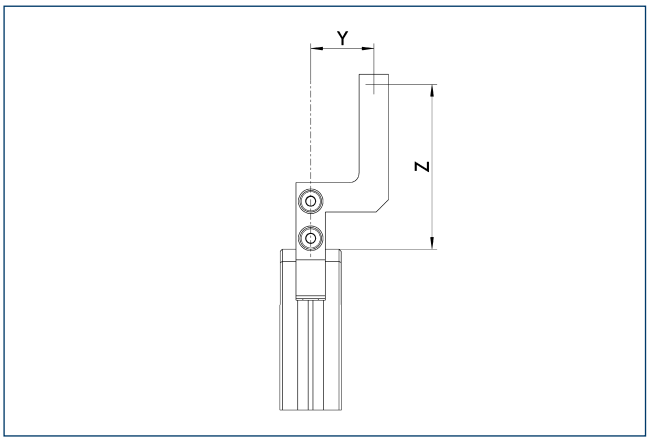

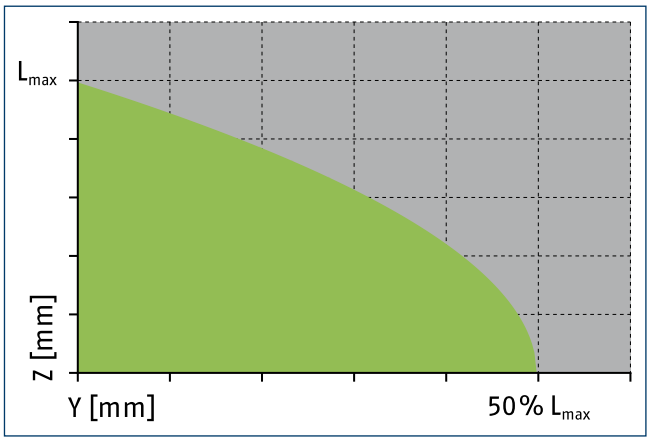

Permitted range

Inadmissible range

L_{max} is equivalent to the maximum permitted finger length, see the chart of technical specifications.

SDV-P pressure maintenance valve

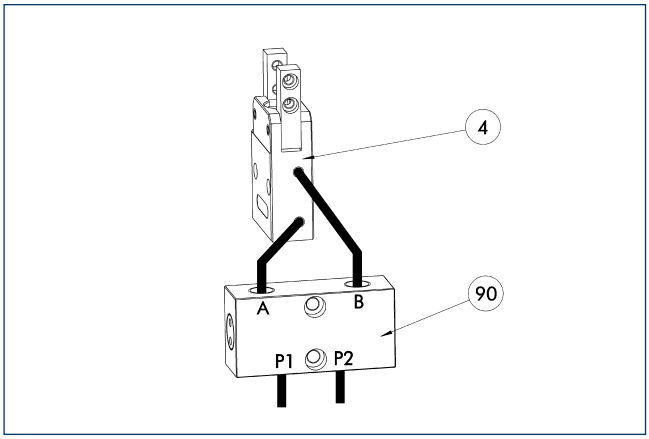

4 Gripper

90 SDV-P pressure maintenance valve

The SDV-P pressure maintenance valves ensure that the pressure in the piston chamber of pneumatic gripping, rotary, linear, and quick-change modules is maintained temporarily during an emergency stop.

Description	ID	
Pressure maintenance valve		
SDV-P 04	0403130	

Optical proximity switch

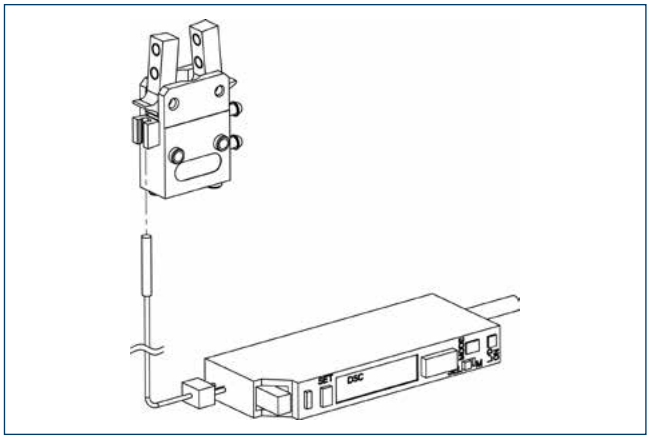

Description	ID	
Optical proximity switch		
ONS 01	0301390	
Optical wave guide		
ONS 01-LWL	0301391	

ⓘ Per each unit a sensor (ONS 01) as well as an optical wave guide (ONS 01-LWL) are required. Assembly of the optical sensors at the gripper is done with the supplied plastic clip.

SWG 16

SCHUNK Grippers pneumatic | 2-Finger Angular Grippers | Small Components Gripper

Gripping force, O.D. gripping

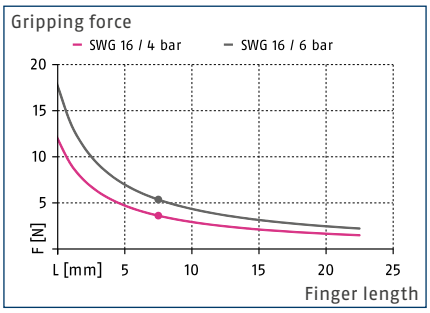

Closing torque curve**

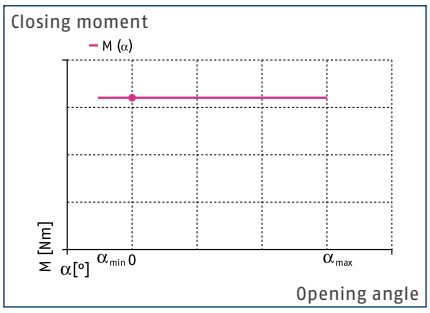

Finger load

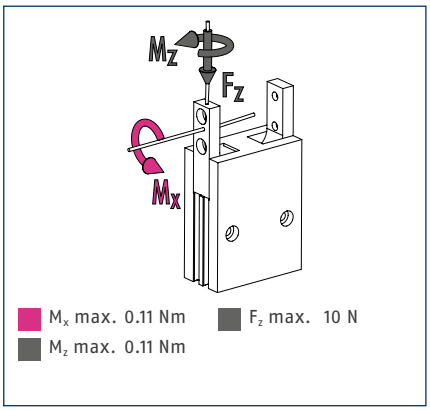

ⓘ The indicated moments and forces are statical values, apply for each base jaw and should not appear simultaneously. If the max. permitted finger weight is exceeded, it is impreative to throttle the air supply so that the jaw movement occurs without any hitting or bouncing. Service life may be reduced.

Technical data

Description		SWG 16
ID		0305104
Opening angle per jaw	[°]	15
Closed angle per jaw up to	[°]	7
Closing moment	[Nm]	0.058
Spring-actuated closing moment	[Nm]	0.017
Weight	[kg]	0.011
Recommended workpiece weight	[kg]	0.027
Fluid consumption per double stroke	[cm³]	0.12
min. / max. operating pressure	[bar]	4/6.5
Nominal operating pressure	[bar]	6
Closing- / opening time	[s]	0.015/0.02
max. permitted finger length	[mm]	15
max. permitted weight per finger	[kg]	0.012
IP class		30
min. / max. ambient temperature	[°C]	5/90
Repeat accuracy	[mm]	0.05

**The diagramm is valid for all opening angle variants.

Main view

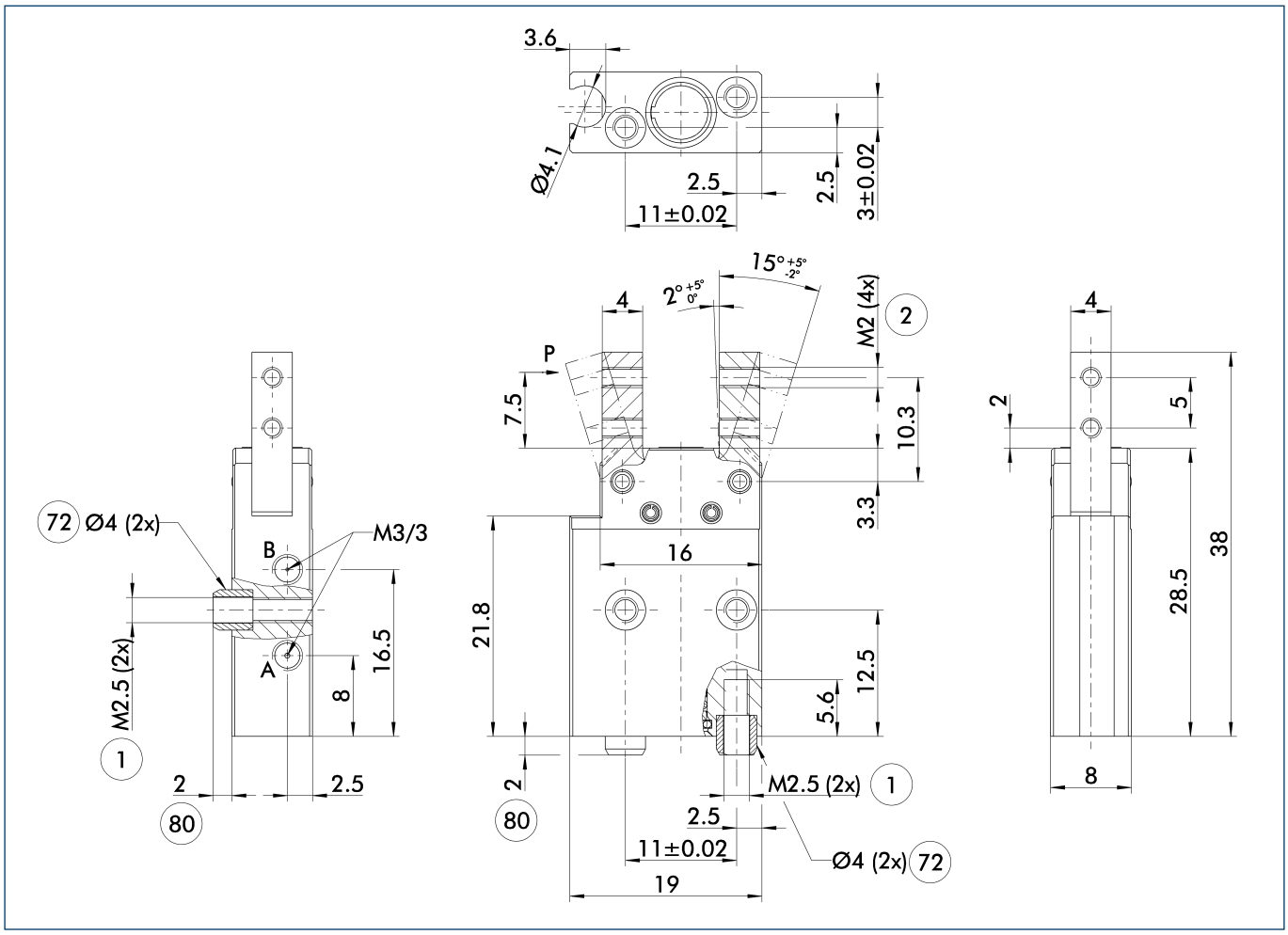

The drawing shows the gripper in the basic version with closed jaws, without dimensional consideration of the options described below.

ⓘ The SDV-P pressure maintenance valve can be used as a gripping force maintenance device (see catalog section on "Accessories").

A, a Main / direct connection, gripper opening

B, b Main / direct connection, gripper closing

(1) Gripper connection

(2) Finger connection

(72) Fit for centering sleeves

(80) Depth of the centering sleeve hole in the mating part

Monitoring for stacked arrangement

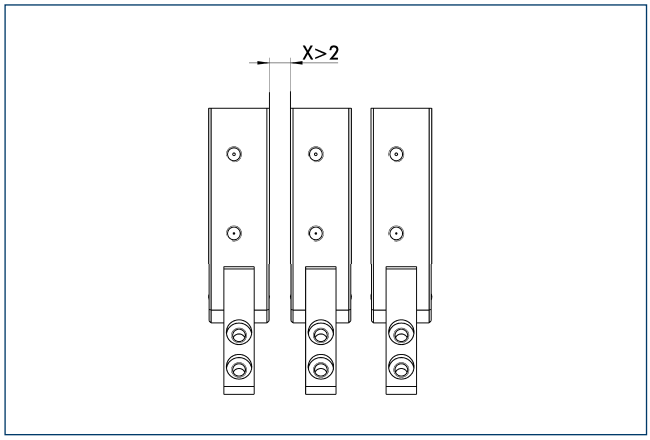

Caution: Monitoring is carried out by magnetic switches, and in case of side-by-side assembly of several units, a minimum distance of X mm between the units must be maintained.

Maximum permitted finger projection

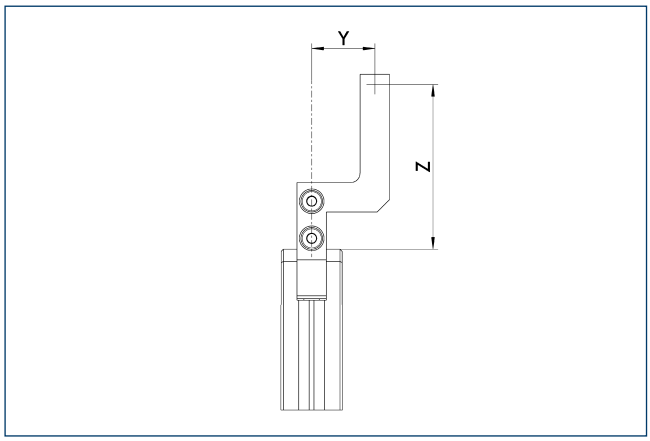

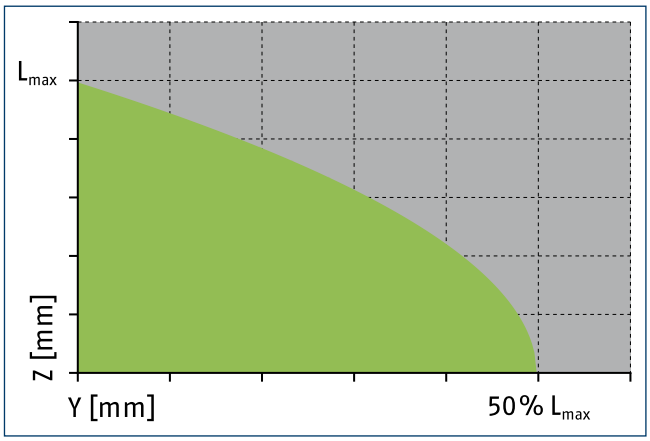

Permitted range Inadmissible range

L_{max} is equivalent to the maximum permitted finger length, see the chart of technical specifications.

SDV-P pressure maintenance valve

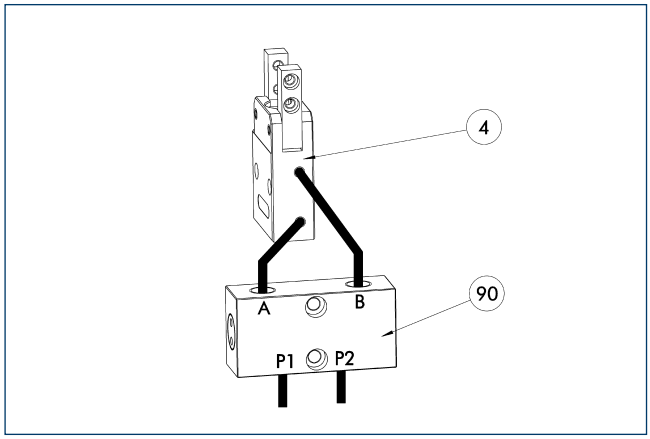

(4) Gripper
(90) SDV-P pressure maintenance valve

The SDV-P pressure maintenance valves ensure that the pressure in the piston chamber of pneumatic gripping, rotary, linear, and quick-change modules is maintained temporarily during an emergency stop.

Description	ID	
Pressure maintenance valve		
SDV-P 04	0403130	

Modular assembly automation

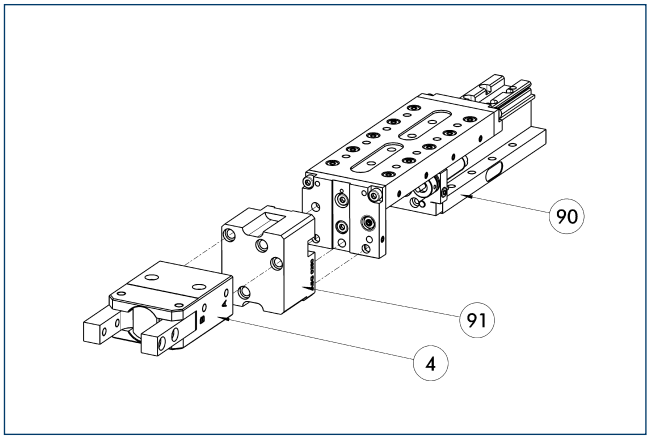

(4) Gripper
(91) ASG adapter plate
(90) CLM / KLM / LM / ELM / ELS / HLM linear module

Gripper and linear modules can be combined with standard adapters out of the modular assembly system. For more information see our catalog "Modular Assembly Automation".

MMS electronic magnetic switches

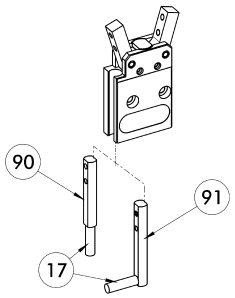

(17) Cable outlet
(91) MMS 22...-SA sensor
(90) MMS 22... sensor

End position monitoring for mounting in the C-slot.

Description	ID	Often combined
MMS electronic magnetic switches		
MMS 22-S-M8-PNP	0301032	●
MMSK 22-S-PNP	0301034	
MMS electronic magnetic switches with lateral cable outlet		
MMS 22-S-M8-PNP-SA	0301042	●
MMSK 22-S-PNP-SA	0301044	
Cable extensions		
KV BW08-SG08 3P-0030-PNP	0301495	
KV BW08-SG08 3P-0100-PNP	0301496	
KV BW08-SG08 3P-0200-PNP	0301497	●
Clip for plug / socket		
CLI-M8	0301463	
Connection cables		
KA BG08-L 3P-0300-PNP	0301622	●
KA BG08-L 3P-0500-PNP	0301623	
KA BW08-L 3P-0300-PNP	0301594	
KA BW08-L 3P-0500-PNP	0301502	
Sensor distributor		
V2-M8	0301775	●
V4-M8	0301746	
V8-M8	0301751	

ⓘ Two sensors (closer/S) are required for each unit, plus extension cables as an option. Please note the minimum permitted bending radii for the sensor cables, which are generally 35 mm.

MMS PI1 programmable magnetic switches

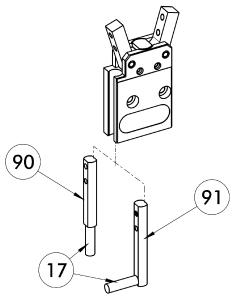

(17) Cable outlet
(91) MMS 22...-PI1-...-SA sensor
(90) MMS 22...-PI1-... sensor

Position query with one programmable position per sensor and electronics integrated in sensor. Programmable via MT magnet teaching tool (included in the scope of delivery) or ST plug teaching tool (optional). Limit position query mounted in C-groove. If the ST plug teaching tools are listed in the table, teaching can only take place with the ST plug teaching tools.

Description	ID	Often combined
MMS PI1 programmable magnetic switches		
MMS 22-PI1-S-M8-PNP	0301160	●
MMSK 22-PI1-S-PNP	0301162	
MMS PI1-HD programmable magnetic switches with stainless steel housing		
MMS 22-PI1-S-M8-PNP-HD	0301110	●
MMSK 22-PI1-S-PNP-HD	0301112	
MMS PI1 programmable magnetic switches with lateral cable outlet		
MMS 22-PI1-S-M8-PNP-SA	0301166	●
MMSK 22-PI1-S-PNP-SA	0301168	

ⓘ Two sensors (closer/S) are required for each unit, plus extension cables as an option. Please note the minimum permitted bending radii for the sensor cables, which are generally 35 mm. Connection cable, cable extensions, and sensor distributors can be found in the table for the MMS 22.

MMS PI2 programmable magnetic switches

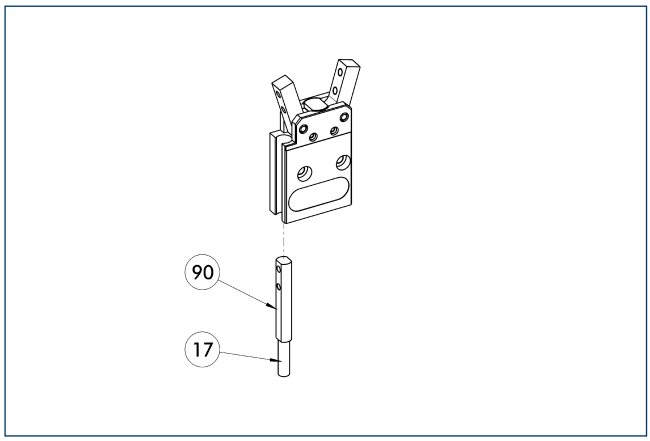

(17) Cable outlet (90) MMS 22...-PI2-... sensor

Position query with two programmable positions per sensor and electronics integrated in sensor. Programmable via MT magnet teaching tool (included in the scope of delivery) or ST plug teaching tool (optional). Limit position query mounted in C-groove. If the ST plug teaching tools are listed in the table, teaching can only take place with the ST plug teaching tools.

Description	ID	Often combined
MMS PI2 programmable magnetic switches		
MMS 22-PI2-S-M8-PNP	0301180	●
MMSK 22-PI2-S-PNP	0301182	
MMS PI2-HD programmable magnetic switches with stainless steel housing		
MMS 22-PI2-S-M8-PNP-HD	0301130	●
MMSK 22-PI2-S-PNP-HD	0301132	

ⓘ Per unit one sensor (closer/S) is required, optionally a cable extension. Please note the minimum permitted bending radii for the sensor cables, which are generally 35 mm. Connection cable, cable extensions, and sensor distributors can be found in the table for the MMS-P 22.

MMS-P programmable magnetic switches

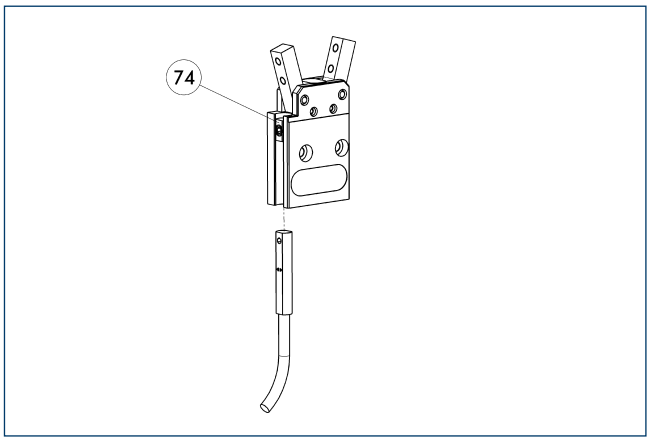

(74) Stop for MMS-P

Position monitoring with two programmable positions per sensor. The end position monitoring is mounted in the C-slot.

Description	ID	Often combined
MMS-P programmable magnetic switches		
MMSK-P 22-S-PNP	0301371	
MMS-P 22-S-M8-PNP	0301370	●
Clip for plug / socket		
CLI-M8	0301463	
Connection cables		
KA BG08-L 4P-0500	0307767	●
KA BG08-L 4P-1000	0307768	
KA BW08-L 4P-0500	0307765	
KA BW08-L 4P-1000	0307766	
Sensor distributor		
V2-M8-4P-2XM8-3P	0301380	

ⓘ Per unit one sensor (closer/S) is required, optionally a cable extension. Please note the minimum permitted bending radii for the sensor cables, which are generally 35 mm.

SWG 20

SCHUNK Grippers pneumatic | 2-Finger Angular Grippers | Small Components Gripper

Gripping force, O.D. gripping

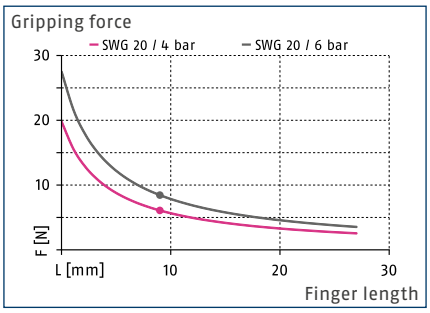

Closing torque curve**

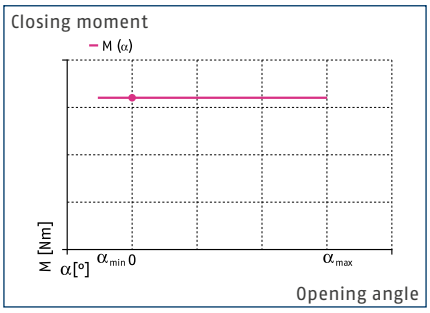

Finger load

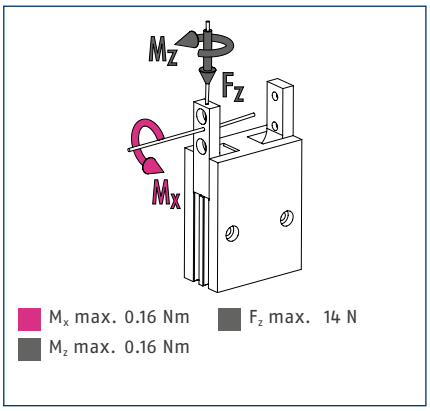

ⓘ The indicated moments and forces are statical values, apply for each base jaw and should not appear simultaneously. If the max. permitted finger weight is exceeded, it is impreative to throttle the air supply so that the jaw movement occurs without any hitting or bouncing. Service life may be reduced.

Technical data

Description		SWG 20
ID		0305105
Opening angle per jaw	[°]	15
Closed angle per jaw up to	[°]	7
Closing moment	[Nm]	0.11
Spring-actuated closing moment	[Nm]	0.033
Weight	[kg]	0.019
Recommended workpiece weight	[kg]	0.043
Fluid consumption per double stroke	[cm³]	0.25
min. / max. operating pressure	[bar]	4/6.5
Nominal operating pressure	[bar]	6
Closing- / opening time	[s]	0.015/0.02
max. permitted finger length	[mm]	18
max. permitted weight per finger	[kg]	0.02
IP class		30
min. / max. ambient temperature	[°C]	5/90
Repeat accuracy	[mm]	0.05

**The diagramm is valid for all opening angle variants.

Main view

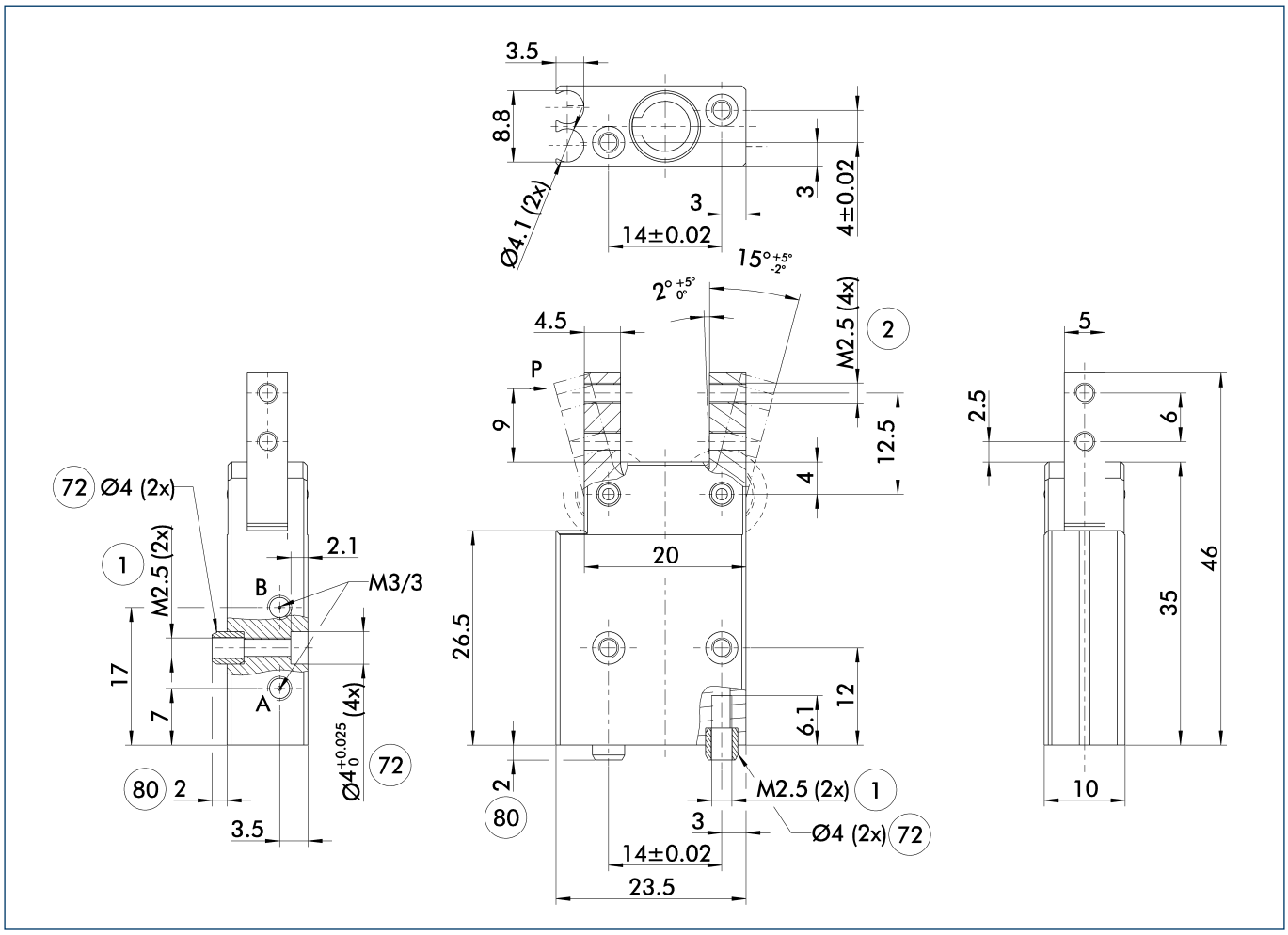

The drawing shows the gripper in the basic version with closed jaws, without dimensional consideration of the options described below.

ⓘ The SDV-P pressure maintenance valve can be used as a gripping force maintenance device (see catalog section on "Accessories").

A, a Main / direct connection, gripper opening

B, b Main / direct connection, gripper closing

(1) Gripper connection

(2) Finger connection

(72) Fit for centering sleeves

(80) Depth of the centering sleeve hole in the mating part

Monitoring for stacked arrangement

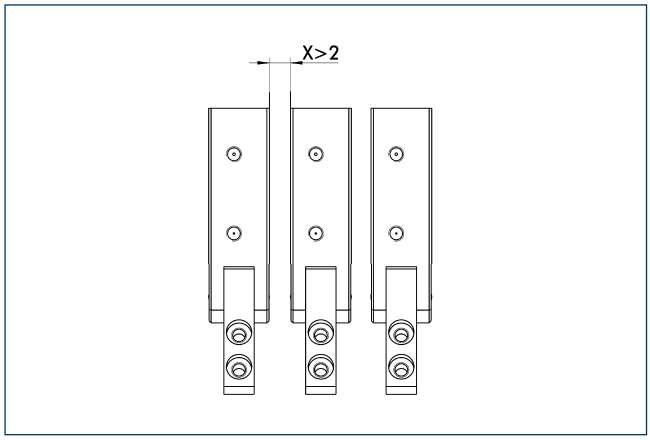

Caution: Monitoring is carried out by magnetic switches, and in case of side-by-side assembly of several units, a minimum distance of X mm between the units must be maintained.

Maximum permitted finger projection

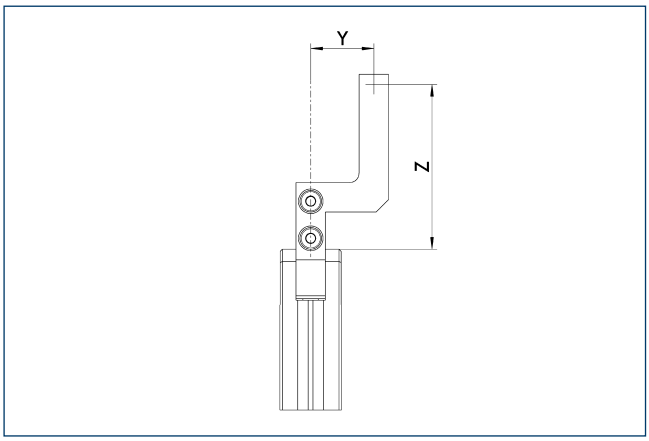

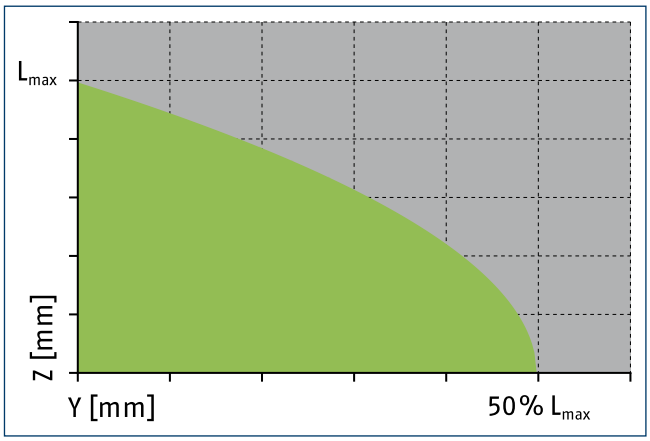

Permitted range Inadmissible range

L_{max} is equivalent to the maximum permitted finger length, see the chart of technical specifications.

SDV-P pressure maintenance valve

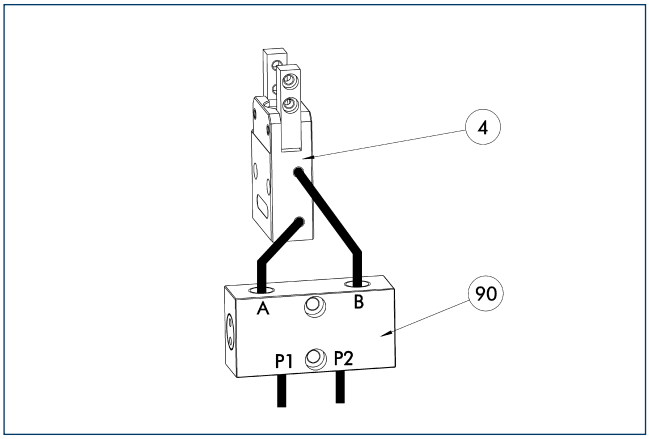

(4) Gripper
(90) SDV-P pressure maintenance valve

The SDV-P pressure maintenance valves ensure that the pressure in the piston chamber of pneumatic gripping, rotary, linear, and quick-change modules is maintained temporarily during an emergency stop.

Description	ID	
Pressure maintenance valve		
SDV-P 04	0403130	

Modular assembly automation

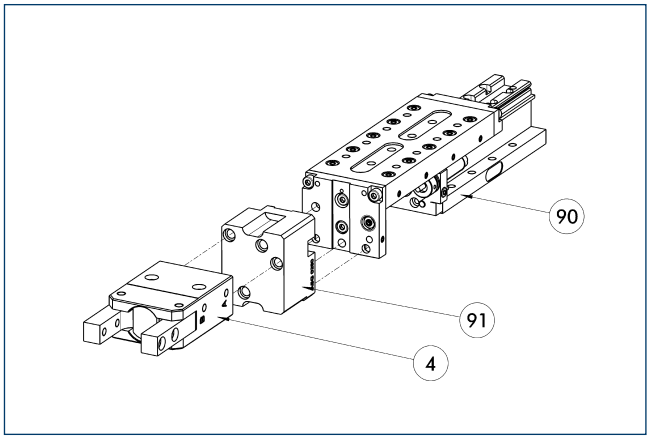

(4) Gripper
(91) ASG adapter plate
(90) CLM / KLM / LM / ELM / ELS / HLM linear module

Gripper and linear modules can be combined with standard adapters out of the modular assembly system. For more information see our catalog "Modular Assembly Automation".

MMS electronic magnetic switches

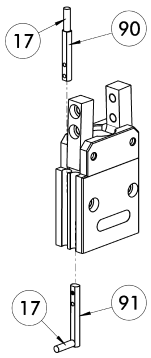

(17) Cable outlet
(90) MMS 22...-SA sensor
(91) MMS 22... sensor

End position monitoring for mounting in the C-slot.

Description	ID	Often combined
MMS electronic magnetic switches		
MMS 22-S-M8-PNP	0301032	●
MMSK 22-S-PNP	0301034	
MMS electronic magnetic switches with lateral cable outlet		
MMSK 22-S-PNP-SA	0301044	
Cable extensions		
KV BW08-SG08 3P-0030-PNP	0301495	
KV BW08-SG08 3P-0100-PNP	0301496	
KV BW08-SG08 3P-0200-PNP	0301497	●
Clip for plug / socket		
CLI-M8	0301463	
Connection cables		
KA BG08-L 3P-0300-PNP	0301622	●
KA BG08-L 3P-0500-PNP	0301623	
KA BW08-L 3P-0300-PNP	0301594	
KA BW08-L 3P-0500-PNP	0301502	
Sensor distributor		
V2-M8	0301775	●
V4-M8	0301746	
V8-M8	0301751	

ⓘ Two sensors (closer/S) are required for each unit, plus extension cables as an option. Please note the minimum permitted bending radii for the sensor cables, which are generally 35 mm.

MMS PI1 programmable magnetic switches

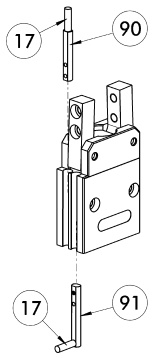

(17) Cable outlet
(90) MMS 22...-PI1-...-SA sensor
(91) MMS 22...-PI1-... sensor

Position query with one programmable position per sensor and electronics integrated in sensor. Programmable via MT magnet teaching tool (included in the scope of delivery) or ST plug teaching tool (optional). Limit position query mounted in C-groove. If the ST plug teaching tools are listed in the table, teaching can only take place with the ST plug teaching tools.

Description	ID	Often combined
MMS PI1 programmable magnetic switches		
MMS 22-PI1-S-M8-PNP	0301160	●
MMSK 22-PI1-S-PNP	0301162	
MMS PI1-HD programmable magnetic switches with stainless steel housing		
MMS 22-PI1-S-M8-PNP-HD	0301110	●
MMSK 22-PI1-S-PNP-HD	0301112	
MMS PI1 programmable magnetic switches with lateral cable outlet		
MMS 22-PI1-S-M8-PNP-SA	0301166	●
MMSK 22-PI1-S-PNP-SA	0301168	

ⓘ Two sensors (closer/S) are required for each unit, plus extension cables as an option. Please note the minimum permitted bending radii for the sensor cables, which are generally 35 mm. Connection cable, cable extensions, and sensor distributors can be found in the table for the MMS 22.

MMS PI2 programmable magnetic switches

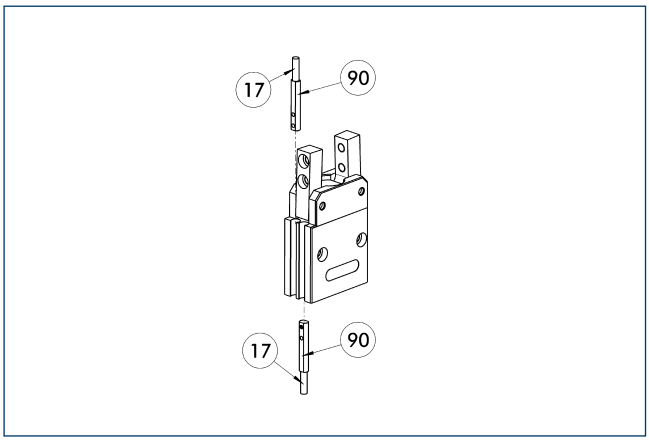

17 Cable outlet

90 MMS 22...-PI2-... sensor

Position query with two programmable positions per sensor and electronics integrated in sensor. Programmable via MT magnet teaching tool (included in the scope of delivery) or ST plug teaching tool (optional). Limit position query mounted in C-groove. If the ST plug teaching tools are listed in the table, teaching can only take place with the ST plug teaching tools.

Description	ID	Often combined
MMS PI2 programmable magnetic switches		
MMS 22-PI2-S-M8-PNP	0301180	●
MMSK 22-PI2-S-PNP	0301182	
MMS PI2-HD programmable magnetic switches with stainless steel housing		
MMS 22-PI2-S-M8-PNP-HD	0301130	●
MMSK 22-PI2-S-PNP-HD	0301132	

ⓘ Per unit one sensor (closer/S) is required, optionally a cable extension. Please note the minimum permitted bending radii for the sensor cables, which are generally 35 mm. Connection cable, cable extensions, and sensor distributors can be found in the table for the MMS-P 22.

MMS-P programmable magnetic switches

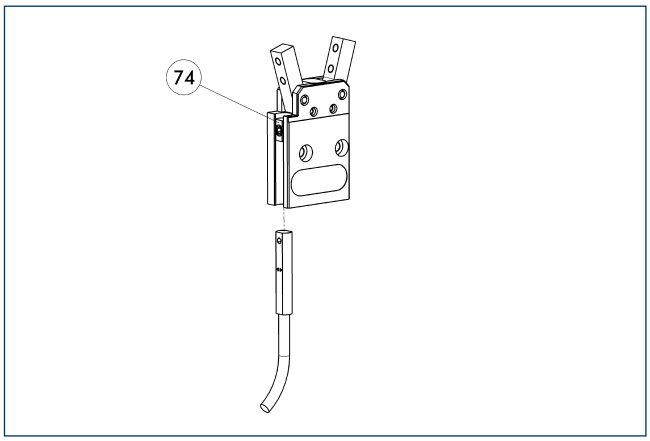

74 Stop for MMS-P

Position monitoring with two programmable positions per sensor. The end position monitoring is mounted in the C-slot.

Description	ID	Often combined
MMS-P programmable magnetic switches		
MMSK-P 22-S-PNP	0301371	
MMS-P 22-S-M8-PNP	0301370	●
Clip for plug / socket		
CLI-M8	0301463	
Connection cables		
KA BG08-L 4P-0500	0307767	●
KA BG08-L 4P-1000	0307768	
KA BW08-L 4P-0500	0307765	
KA BW08-L 4P-1000	0307766	
Sensor distributor		
V2-M8-4P-2XM8-3P	0301380	

ⓘ Per unit one sensor (closer/S) is required, optionally a cable extension. Please note the minimum permitted bending radii for the sensor cables, which are generally 35 mm.

SWG 25

SCHUNK Grippers pneumatic | 2-Finger Angular Grippers | Small Components Gripper

Gripping force, O.D. gripping

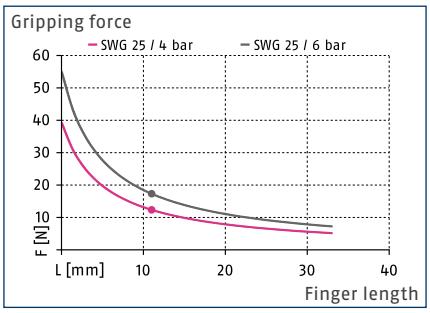

Closing torque curve**

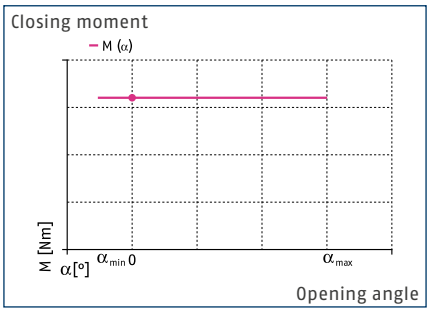

Finger load

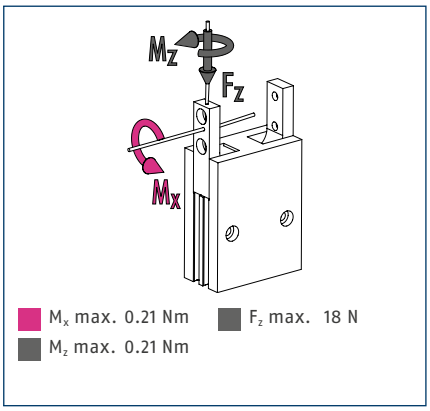

ⓘ The indicated moments and forces are statical values, apply for each base jaw and should not appear simultaneously. If the max. permitted finger weight is exceeded, it is impreative to throttle the air supply so that the jaw movement occurs without any hitting or bouncing. Service life may be reduced.

Technical data

Description		SWG 25
ID		0305106
Opening angle per jaw	[°]	15
Closed angle per jaw up to	[°]	7
Closing moment	[Nm]	0.28
Spring-actuated closing moment	[Nm]	0.08
Weight	[kg]	0.035
Recommended workpiece weight	[kg]	0.09
Fluid consumption per double stroke	[cm³]	0.4
min. / max. operating pressure	[bar]	4/6.5
Nominal operating pressure	[bar]	6
Closing- / opening time	[s]	0.015/0.02
max. permitted finger length	[mm]	22
max. permitted weight per finger	[kg]	0.028
IP class		30
min. / max. ambient temperature	[°C]	5/90
Repeat accuracy	[mm]	0.05

**The diagramm is valid for all opening angle variants.

Main view

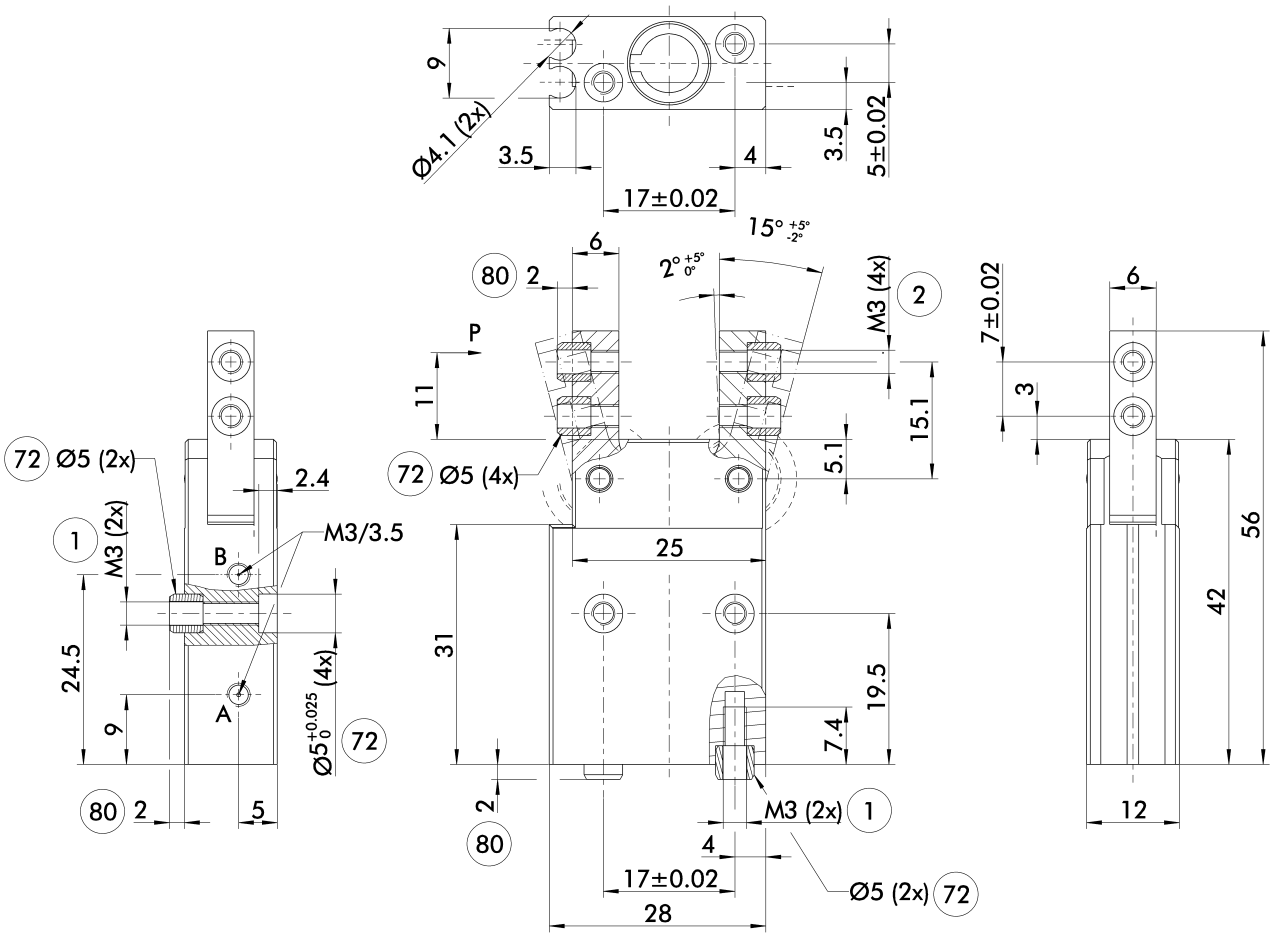

The drawing shows the gripper in the basic version with closed jaws, without dimensional consideration of the options described below.

ⓘ The SDV-P pressure maintenance valve can be used as a gripping force maintenance device (see catalog section on "Accessories").

A, a Main / direct connection, gripper opening

B, b Main / direct connection, gripper closing

(1) Gripper connection

(2) Finger connection

(72) Fit for centering sleeves

(80) Depth of the centering sleeve hole in the mating part

Monitoring for stacked arrangement

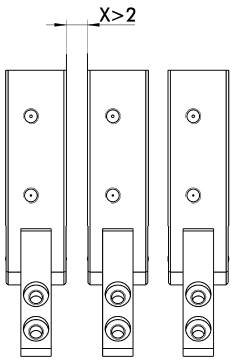

Caution: Monitoring is carried out by magnetic switches, and in case of side-by-side assembly of several units, a minimum distance of X mm between the units must be maintained.

Maximum permitted finger projection

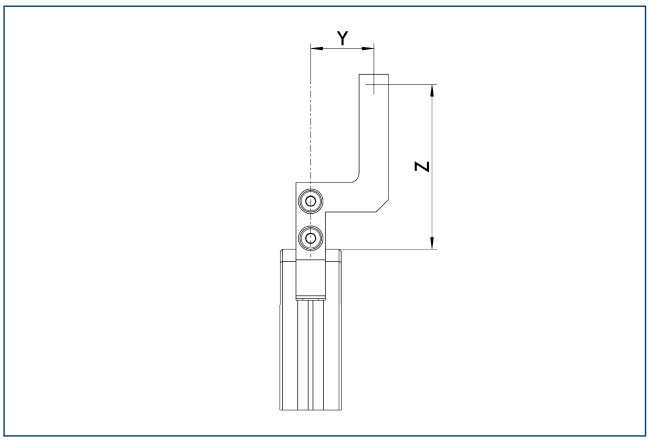

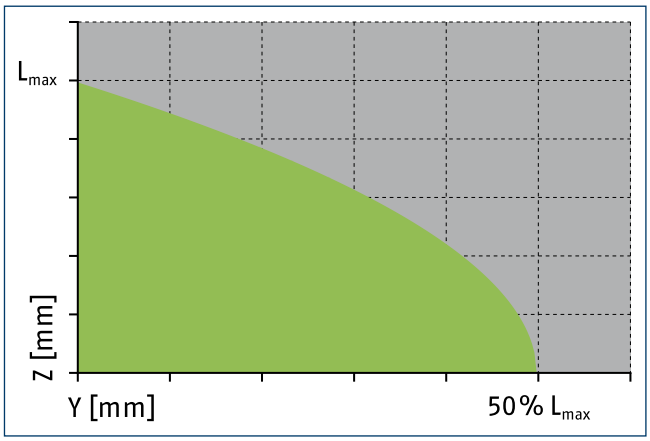

Permitted range Inadmissible range

L_{max} is equivalent to the maximum permitted finger length, see the chart of technical specifications.

SDV-P pressure maintenance valve

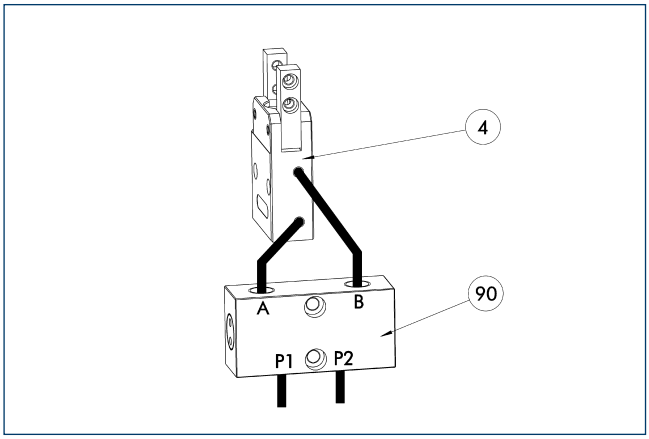

(4) Gripper

(90) SDV-P pressure maintenance valve

The SDV-P pressure maintenance valves ensure that the pressure in the piston chamber of pneumatic gripping, rotary, linear, and quick-change modules is maintained temporarily during an emergency stop.

Description	ID	
Pressure maintenance valve		
SDV-P 04	0403130	

Modular assembly automation

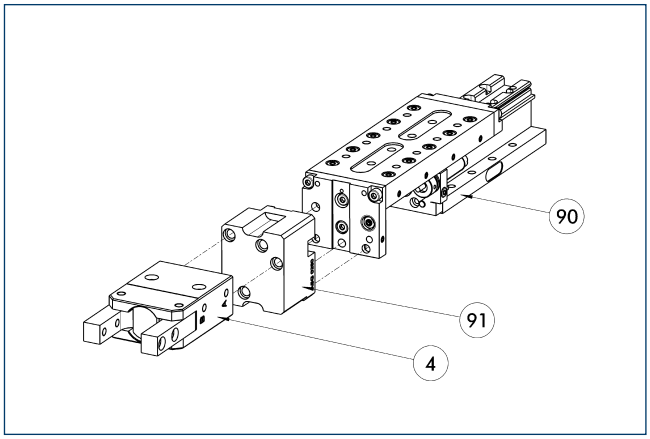

(4) Gripper

(91) ASG adapter plate

(90) CLM / KLM / LM / ELM / ELS / HLM linear module

Gripper and linear modules can be combined with standard adapters out of the modular assembly system. For more information see our catalog "Modular Assembly Automation".

MMS electronic magnetic switches

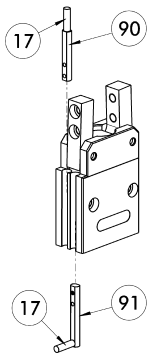

17 Cable outlet
90 MMS 22...-SA sensor
91 MMS 22... sensor

End position monitoring for mounting in the C-slot.

Description	ID	Often combined
MMS electronic magnetic switches		
MMS 22-S-M8-PNP	0301032	●
MMSK 22-S-PNP	0301034	
MMS electronic magnetic switches with lateral cable outlet		
MMS 22-S-M8-PNP-SA	0301042	●
MMSK 22-S-PNP-SA	0301044	
Cable extensions		
KV BW08-SG08 3P-0030-PNP	0301495	
KV BW08-SG08 3P-0100-PNP	0301496	
KV BW08-SG08 3P-0200-PNP	0301497	●
Clip for plug / socket		
CLI-M8	0301463	
Connection cables		
KA BG08-L 3P-0300-PNP	0301622	●
KA BG08-L 3P-0500-PNP	0301623	
KA BW08-L 3P-0300-PNP	0301594	
KA BW08-L 3P-0500-PNP	0301502	
Sensor distributor		
V2-M8	0301775	●
V4-M8	0301746	
V8-M8	0301751	

ⓘ Two sensors (closer/S) are required for each unit, plus extension cables as an option. Please note the minimum permitted bending radii for the sensor cables, which are generally 35 mm.

MMS PI1 programmable magnetic switches

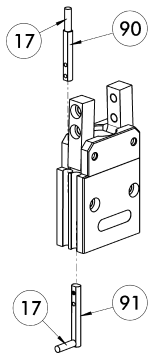

17 Cable outlet
90 MMS 22...-PI1-...-SA sensor
91 MMS 22...-PI1-... sensor

Position query with one programmable position per sensor and electronics integrated in sensor. Programmable via MT magnet teaching tool (included in the scope of delivery) or ST plug teaching tool (optional). Limit position query mounted in C-groove. If the ST plug teaching tools are listed in the table, teaching can only take place with the ST plug teaching tools.

Description	ID	Often combined
MMS PI1 programmable magnetic switches		
MMS 22-PI1-S-M8-PNP	0301160	●
MMSK 22-PI1-S-PNP	0301162	
MMS PI1-HD programmable magnetic switches with stainless steel housing		
MMS 22-PI1-S-M8-PNP-HD	0301110	●
MMSK 22-PI1-S-PNP-HD	0301112	
MMS PI1 programmable magnetic switches with lateral cable outlet		
MMS 22-PI1-S-M8-PNP-SA	0301166	●
MMSK 22-PI1-S-PNP-SA	0301168	

ⓘ Two sensors (closer/S) are required for each unit, plus extension cables as an option. Please note the minimum permitted bending radii for the sensor cables, which are generally 35 mm. Connection cable, cable extensions, and sensor distributors can be found in the table for the MMS 22.

MMS PI2 programmable magnetic switches

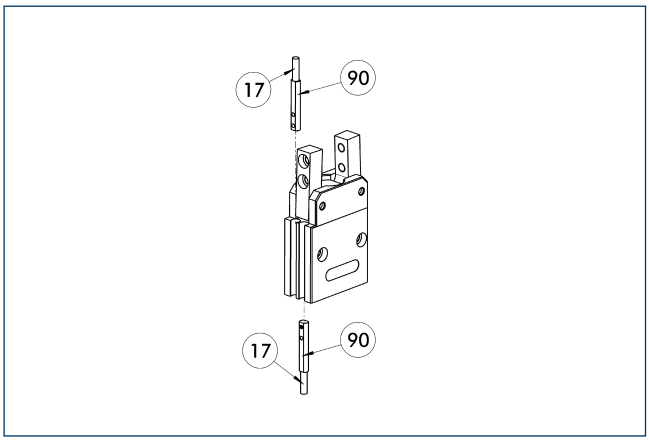

17 Cable outlet

90 MMS 22...-PI2-... sensor

Position query with two programmable positions per sensor and electronics integrated in sensor. Programmable via MT magnet teaching tool (included in the scope of delivery) or ST plug teaching tool (optional). Limit position query mounted in C-groove. If the ST plug teaching tools are listed in the table, teaching can only take place with the ST plug teaching tools.

Description	ID	Often combined
MMS PI2 programmable magnetic switches		
MMS 22-PI2-S-M8-PNP	0301180	●
MMSK 22-PI2-S-PNP	0301182	
MMS PI2-HD programmable magnetic switches with stainless steel housing		
MMS 22-PI2-S-M8-PNP-HD	0301130	●
MMSK 22-PI2-S-PNP-HD	0301132	

ⓘ Per unit one sensor (closer/S) is required, optionally a cable extension. Please note the minimum permitted bending radii for the sensor cables, which are generally 35 mm. Connection cable, cable extensions, and sensor distributors can be found in the table for the MMS-P 22.

MMS-P programmable magnetic switches

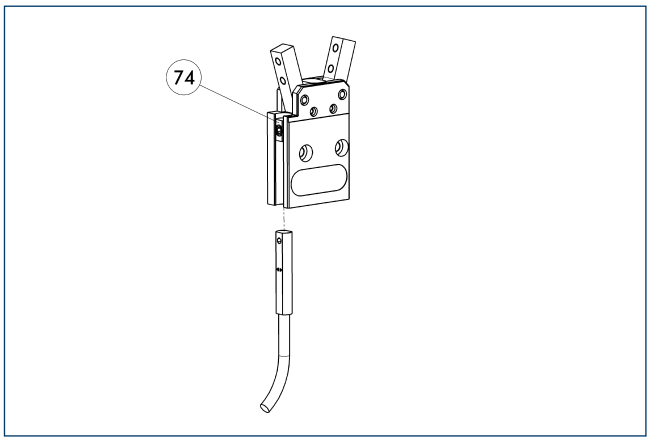

74 Stop for MMS-P

Position monitoring with two programmable positions per sensor. The end position monitoring is mounted in the C-slot.

Description	ID	Often combined
MMS-P programmable magnetic switches		
MMSK-P 22-S-PNP	0301371	
MMS-P 22-S-M8-PNP	0301370	●
Clip for plug / socket		
CLI-M8	0301463	
Connection cables		
KA BG08-L 4P-0500	0307767	●
KA BG08-L 4P-1000	0307768	
KA BW08-L 4P-0500	0307765	
KA BW08-L 4P-1000	0307766	
Sensor distributor		
V2-M8-4P-2XM8-3P	0301380	

ⓘ Per unit one sensor (closer/S) is required, optionally a cable extension. Please note the minimum permitted bending radii for the sensor cables, which are generally 35 mm.

SWG 32

SCHUNK Grippers pneumatic | 2-Finger Angular Grippers | Small Components Gripper

Gripping force, O.D. gripping

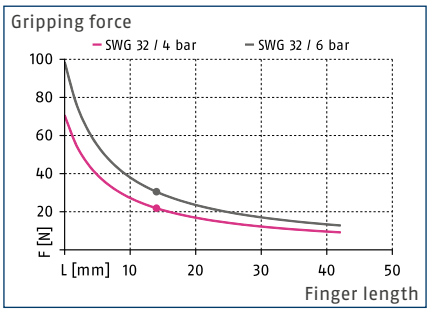

Closing torque curve**

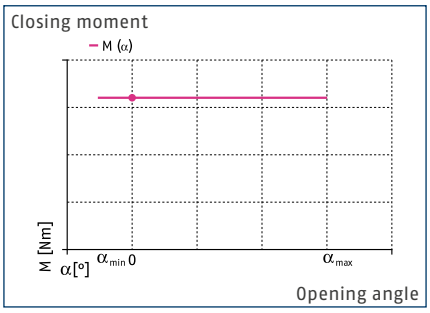

Finger load

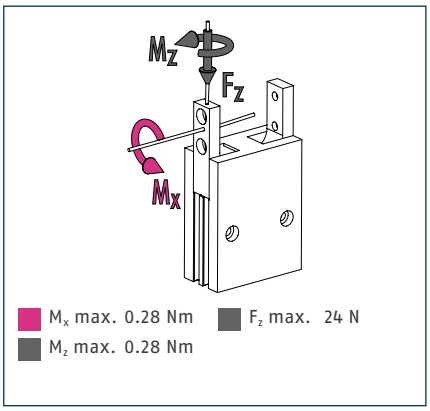

ⓘ The indicated moments and forces are statical values, apply for each base jaw and should not appear simultaneously. If the max. permitted finger weight is exceeded, it is impreative to throttle the air supply so that the jaw movement occurs without any hitting or bouncing. Service life may be reduced.

Technical data

Description		SWG 32
ID		0305107
Opening angle per jaw	[°]	15
Closed angle per jaw up to	[°]	7
Closing moment	[Nm]	0.62
Spring-actuated closing moment	[Nm]	0.18
Weight	[kg]	0.069
Recommended workpiece weight	[kg]	0.156
Fluid consumption per double stroke	[cm³]	0.85
min. / max. operating pressure	[bar]	4/6.5
Nominal operating pressure	[bar]	6
Closing- / opening time	[s]	0.02/0.025
max. permitted finger length	[mm]	28
max. permitted weight per finger	[kg]	0.036
IP class		30
min. / max. ambient temperature	[°C]	5/90
Repeat accuracy	[mm]	0.05

**The diagramm is valid for all opening angle variants.

Main view

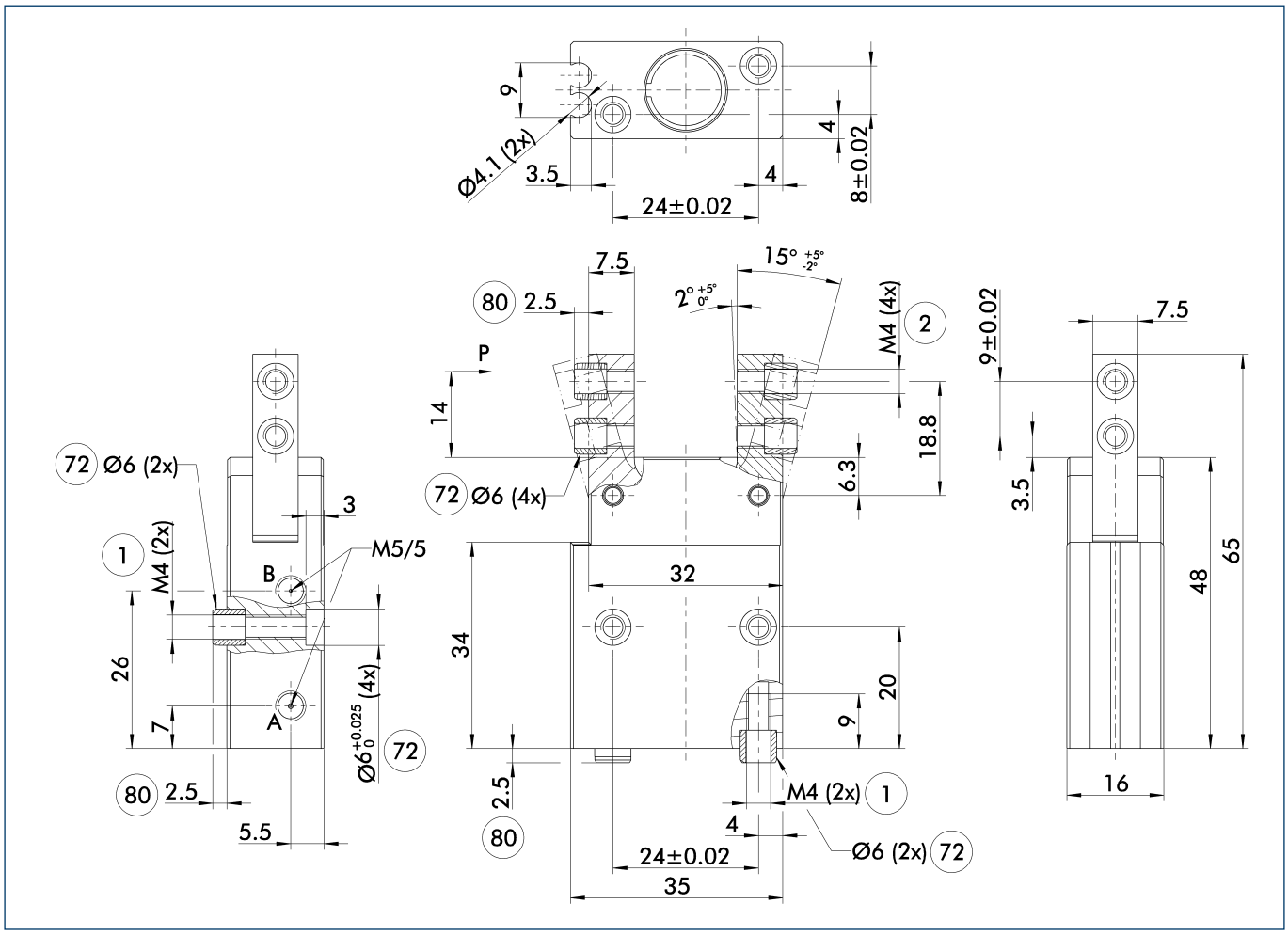

The drawing shows the gripper in the basic version with closed jaws, without dimensional consideration of the options described below.

ⓘ The SDV-P pressure maintenance valve can be used as a gripping force maintenance device (see catalog section on "Accessories").

A, a Main / direct connection, gripper opening

B, b Main / direct connection, gripper closing

(1) Gripper connection

(2) Finger connection

(72) Fit for centering sleeves

(80) Depth of the centering sleeve hole in the mating part

Monitoring for stacked arrangement

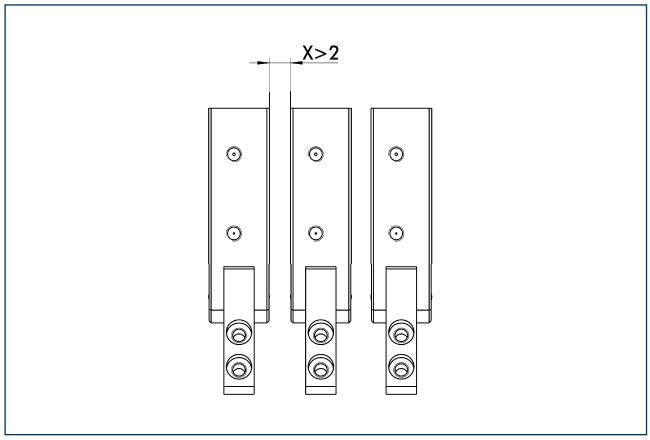

Caution: Monitoring is carried out by magnetic switches, and in case of side-by-side assembly of several units, a minimum distance of X mm between the units must be maintained.

Maximum permitted finger projection

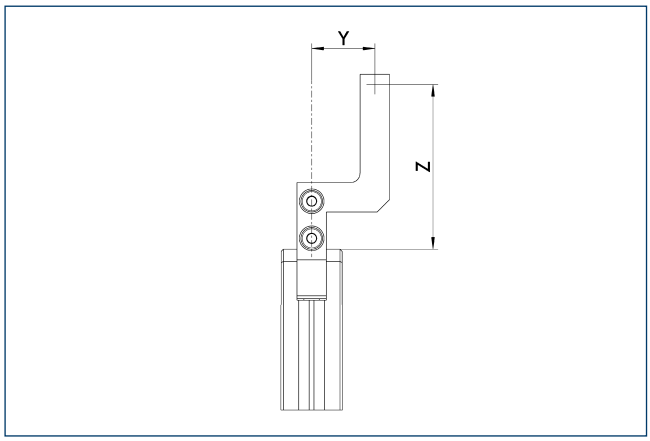

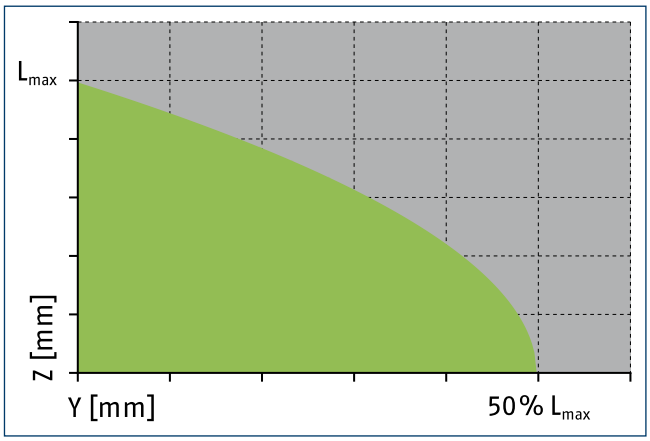

Permitted range

Inadmissible range

L_{max} is equivalent to the maximum permitted finger length, see the chart of technical specifications.

SDV-P pressure maintenance valve

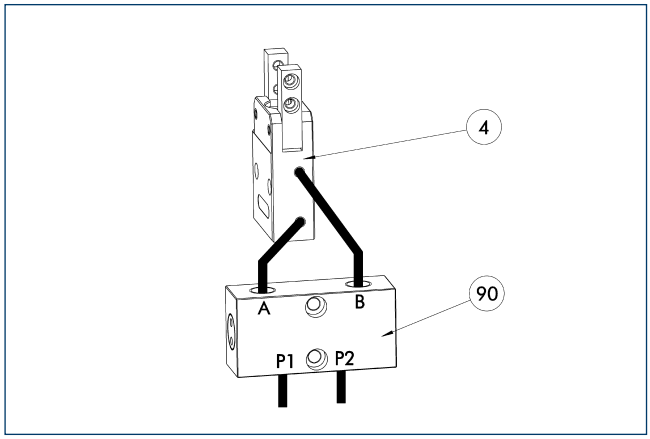

(4) Gripper

(90) SDV-P pressure maintenance valve

The SDV-P pressure maintenance valves ensure that the pressure in the piston chamber of pneumatic gripping, rotary, linear, and quick-change modules is maintained temporarily during an emergency stop.

Description	ID	
Pressure maintenance valve		
SDV-P 04	0403130	

Modular assembly automation

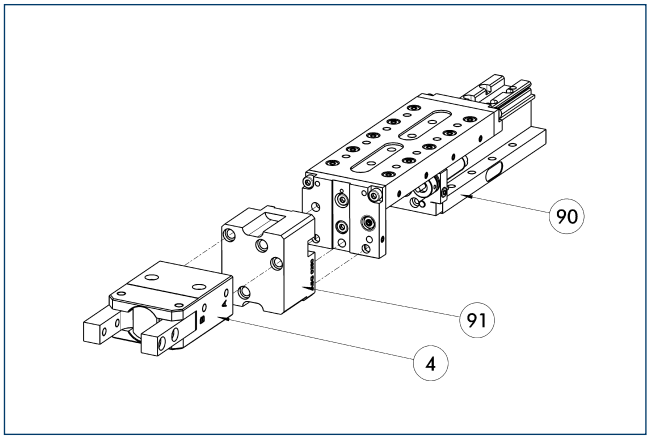

(4) Gripper

(91) ASG adapter plate

(90) CLM / KLM / LM / ELM / ELS / HLM linear module

Gripper and linear modules can be combined with standard adapters out of the modular assembly system. For more information see our catalog "Modular Assembly Automation".

MMS electronic magnetic switches

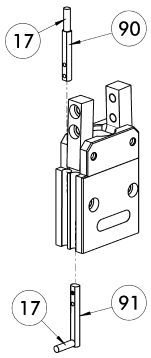

17 Cable outlet
90 MMS 22...-SA sensor
91 MMS 22... sensor

End position monitoring for mounting in the C-slot.

Description	ID	Often combined
MMS electronic magnetic switches		
MMS 22-S-M8-PNP	0301032	●
MMSK 22-S-PNP	0301034	
MMS electronic magnetic switches with lateral cable outlet		
MMS 22-S-M8-PNP-SA	0301042	●
MMSK 22-S-PNP-SA	0301044	
Cable extensions		
KV BW08-SG08 3P-0030-PNP	0301495	
KV BW08-SG08 3P-0100-PNP	0301496	
KV BW08-SG08 3P-0200-PNP	0301497	●
Clip for plug / socket		
CLI-M8	0301463	
Connection cables		
KA BG08-L 3P-0300-PNP	0301622	●
KA BG08-L 3P-0500-PNP	0301623	
KA BW08-L 3P-0300-PNP	0301594	
KA BW08-L 3P-0500-PNP	0301502	
Sensor distributor		
V2-M8	0301775	●
V4-M8	0301746	
V8-M8	0301751	

ⓘ Two sensors (closer/S) are required for each unit, plus extension cables as an option. Please note the minimum permitted bending radii for the sensor cables, which are generally 35 mm.

MMS PI1 programmable magnetic switches

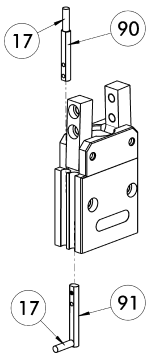

17 Cable outlet
90 MMS 22...-PI1-...-SA sensor
91 MMS 22...-PI1-... sensor

Position query with one programmable position per sensor and electronics integrated in sensor. Programmable via MT magnet teaching tool (included in the scope of delivery) or ST plug teaching tool (optional). Limit position query mounted in C-groove. If the ST plug teaching tools are listed in the table, teaching can only take place with the ST plug teaching tools.

Description	ID	Often combined
MMS PI1 programmable magnetic switches		
MMS 22-PI1-S-M8-PNP	0301160	●
MMSK 22-PI1-S-PNP	0301162	
MMS PI1-HD programmable magnetic switches with stainless steel housing		
MMS 22-PI1-S-M8-PNP-HD	0301110	●
MMSK 22-PI1-S-PNP-HD	0301112	
MMS PI1 programmable magnetic switches with lateral cable outlet		
MMS 22-PI1-S-M8-PNP-SA	0301166	●
MMSK 22-PI1-S-PNP-SA	0301168	

ⓘ Two sensors (closer/S) are required for each unit, plus extension cables as an option. Please note the minimum permitted bending radii for the sensor cables, which are generally 35 mm. Connection cable, cable extensions, and sensor distributors can be found in the table for the MMS 22.

MMS PI2 programmable magnetic switches

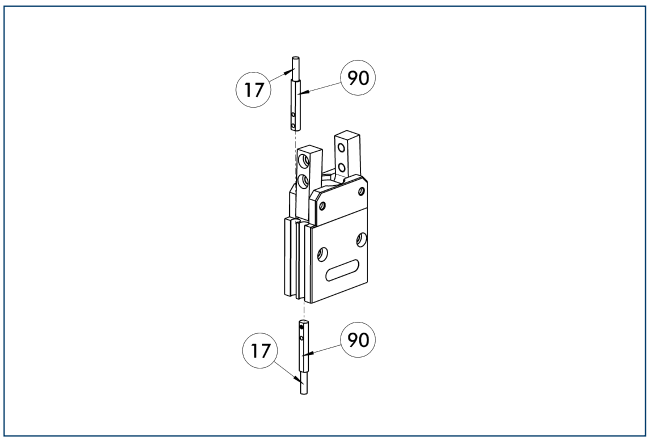

17 Cable outlet

90 MMS 22...-PI2-... sensor

Position query with two programmable positions per sensor and electronics integrated in sensor. Programmable via MT magnet teaching tool (included in the scope of delivery) or ST plug teaching tool (optional). Limit position query mounted in C-groove. If the ST plug teaching tools are listed in the table, teaching can only take place with the ST plug teaching tools.

Description	ID	Often combined
MMS PI2 programmable magnetic switches		
MMS 22-PI2-S-M8-PNP	0301180	●
MMSK 22-PI2-S-PNP	0301182	
MMS PI2-HD programmable magnetic switches with stainless steel housing		
MMS 22-PI2-S-M8-PNP-HD	0301130	●
MMSK 22-PI2-S-PNP-HD	0301132	

ⓘ Per unit one sensor (closer/S) is required, optionally a cable extension. Please note the minimum permitted bending radii for the sensor cables, which are generally 35 mm. Connection cable, cable extensions, and sensor distributors can be found in the table for the MMS-P 22.

MMS-P programmable magnetic switches

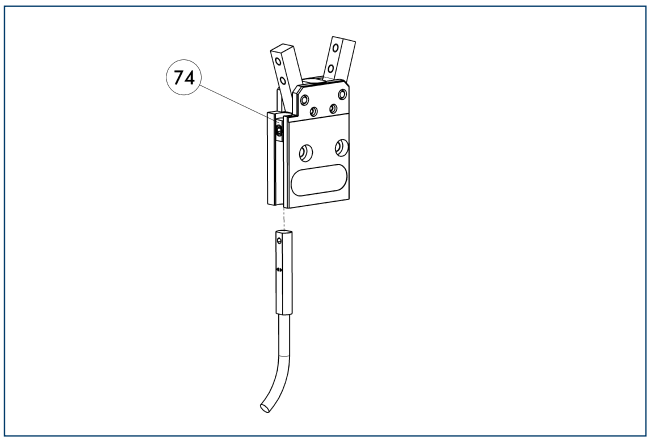

74 Stop for MMS-P

Position monitoring with two programmable positions per sensor. The end position monitoring is mounted in the C-slot.

Description	ID	Often combined
MMS-P programmable magnetic switches		
MMSK-P 22-S-PNP	0301371	
MMS-P 22-S-M8-PNP	0301370	●
Clip for plug / socket		
CLI-M8	0301463	
Connection cables		
KA BG08-L 4P-0500	0307767	●
KA BG08-L 4P-1000	0307768	
KA BW08-L 4P-0500	0307765	
KA BW08-L 4P-1000	0307766	
Sensor distributor		
V2-M8-4P-2XM8-3P	0301380	

ⓘ Per unit one sensor (closer/S) is required, optionally a cable extension. Please note the minimum permitted bending radii for the sensor cables, which are generally 35 mm.

SWG 40

SCHUNK Grippers pneumatic | 2-Finger Angular Grippers | Small Components Gripper

Gripping force, O.D. gripping

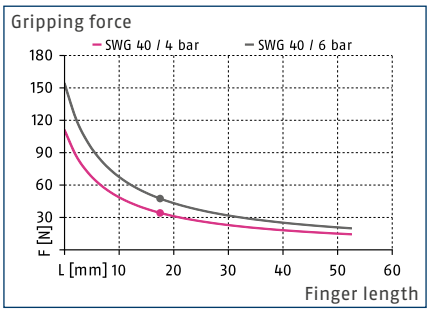

Closing torque curve**

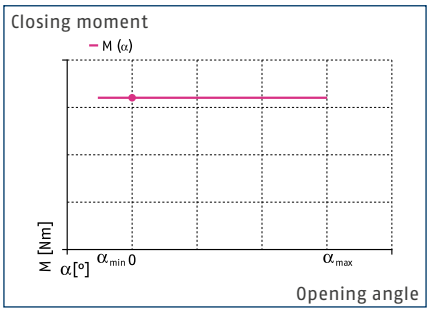

Finger load

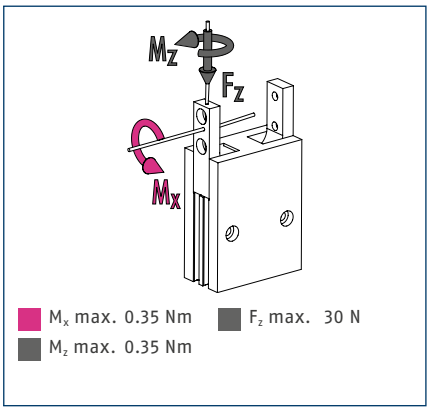

ⓘ The indicated moments and forces are statical values, apply for each base jaw and should not appear simultaneously. If the max. permitted finger weight is exceeded, it is impreative to throttle the air supply so that the jaw movement occurs without any hitting or bouncing. Service life may be reduced.

Technical data

Description		SWG 40
ID		0305108
Opening angle per jaw	[°]	15
Closed angle per jaw up to	[°]	7
Closing moment	[Nm]	1.2
Spring-actuated closing moment	[Nm]	0.36
Weight	[kg]	0.106
Recommended workpiece weight	[kg]	0.24
Fluid consumption per double stroke	[cm³]	1.6
min. / max. operating pressure	[bar]	4/6.5
Nominal operating pressure	[bar]	6
Closing- / opening time	[s]	0.025/0.03
max. permitted finger length	[mm]	35
max. permitted weight per finger	[kg]	0.05
IP class		30
min. / max. ambient temperature	[°C]	5/90
Repeat accuracy	[mm]	0.05

**The diagramm is valid for all opening angle variants.

Main view

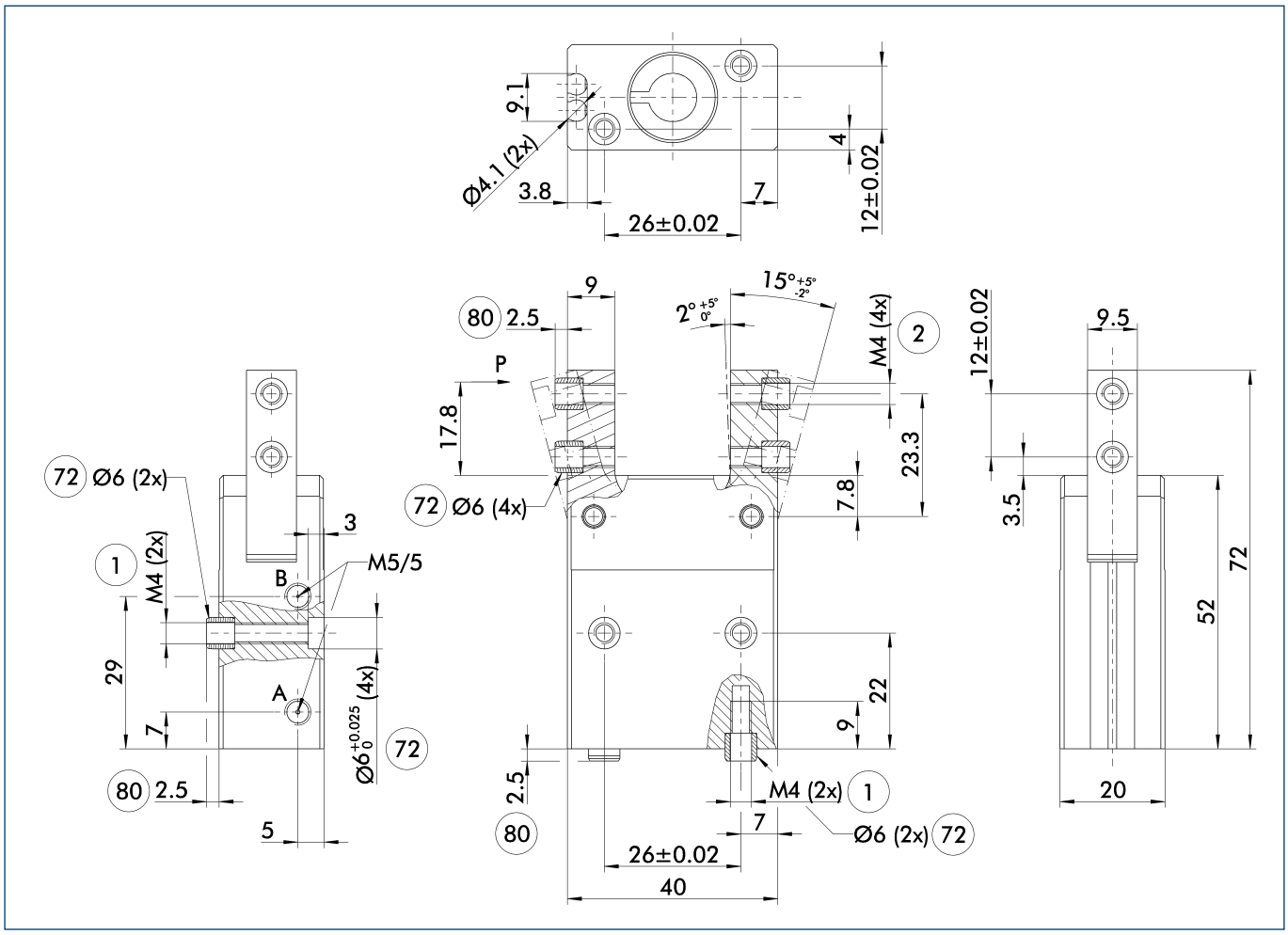

The drawing shows the gripper in the basic version with closed jaws, without dimensional consideration of the options described below.

ⓘ The SDV-P pressure maintenance valve can be used as a gripping force maintenance device (see catalog section on "Accessories").

A, a Main / direct connection, gripper opening

B, b Main / direct connection, gripper closing

(1) Gripper connection

(2) Finger connection

(72) Fit for centering sleeves

(80) Depth of the centering sleeve hole in the mating part

Monitoring for stacked arrangement

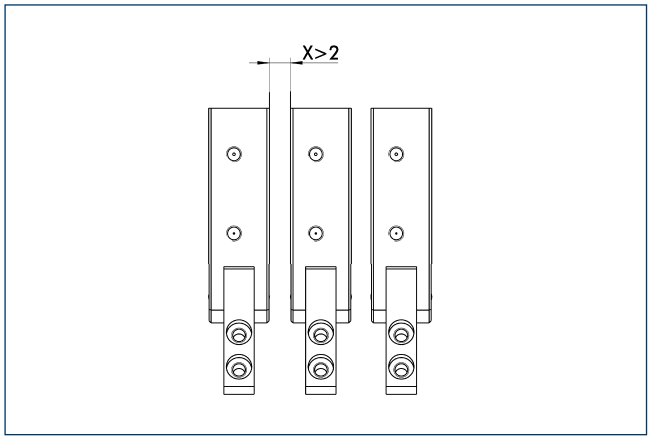

Caution: Monitoring is carried out by magnetic switches, and in case of side-by-side assembly of several units, a minimum distance of X mm between the units must be maintained.

Maximum permitted finger projection

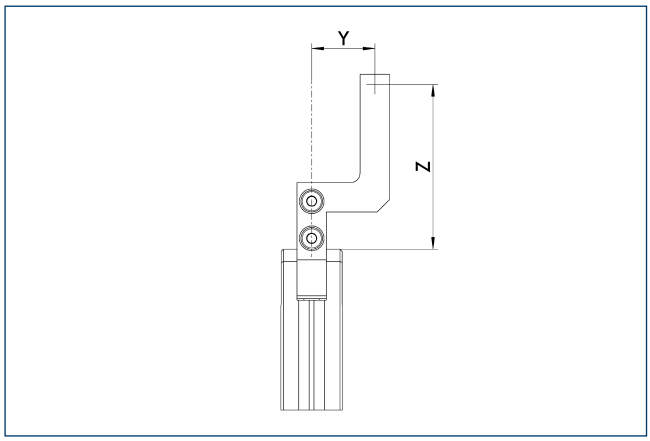

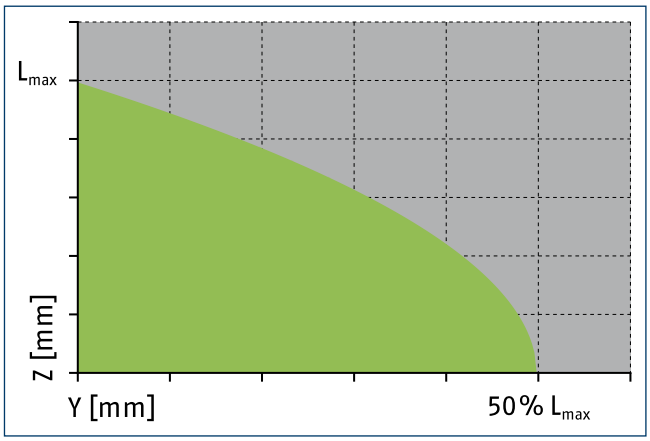

Permitted range Inadmissible range

L_{max} is equivalent to the maximum permitted finger length, see the chart of technical specifications.

SDV-P pressure maintenance valve

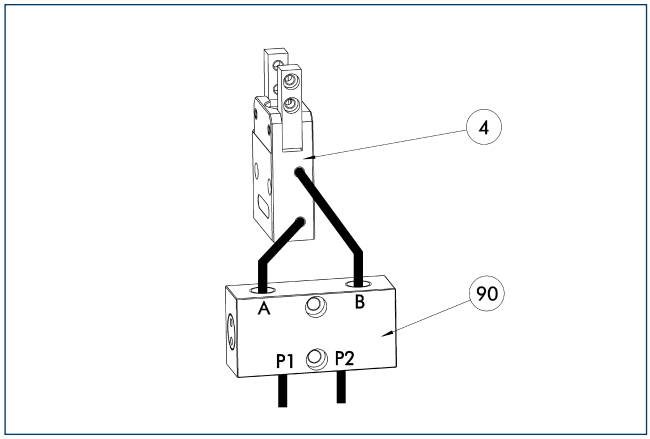

(4) Gripper

(90) SDV-P pressure maintenance valve

The SDV-P pressure maintenance valves ensure that the pressure in the piston chamber of pneumatic gripping, rotary, linear, and quick-change modules is maintained temporarily during an emergency stop.

Description	ID	
Pressure maintenance valve		
SDV-P 04	0403130	

Modular assembly automation

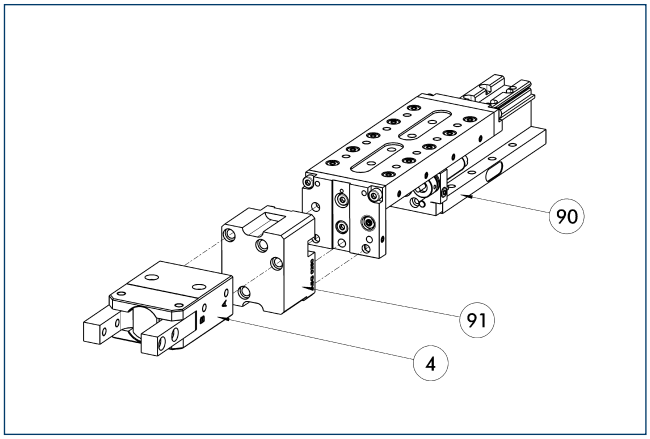

(4) Gripper

(91) ASG adapter plate

(90) CLM / KLM / LM / ELM / ELS / HLM linear module

Gripper and linear modules can be combined with standard adapters out of the modular assembly system. For more information see our catalog "Modular Assembly Automation".

MMS electronic magnetic switches

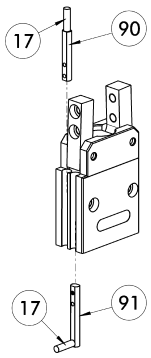

17 Cable outlet
90 MMS 22...-SA sensor
91 MMS 22... sensor

End position monitoring for mounting in the C-slot.

Description	ID	Often combined
MMS electronic magnetic switches		
MMS 22-S-M8-PNP	0301032	●
MMSK 22-S-PNP	0301034	
MMS electronic magnetic switches with lateral cable outlet		
MMS 22-S-M8-PNP-SA	0301042	●
MMSK 22-S-PNP-SA	0301044	
Cable extensions		
KV BW08-SG08 3P-0030-PNP	0301495	
KV BW08-SG08 3P-0100-PNP	0301496	
KV BW08-SG08 3P-0200-PNP	0301497	●
Clip for plug / socket		
CLI-M8	0301463	
Connection cables		
KA BG08-L 3P-0300-PNP	0301622	●
KA BG08-L 3P-0500-PNP	0301623	
KA BW08-L 3P-0300-PNP	0301594	
KA BW08-L 3P-0500-PNP	0301502	
Sensor distributor		
V2-M8	0301775	●
V4-M8	0301746	
V8-M8	0301751	

ⓘ Two sensors (closer/S) are required for each unit, plus extension cables as an option. Please note the minimum permitted bending radii for the sensor cables, which are generally 35 mm.

MMS PI1 programmable magnetic switches

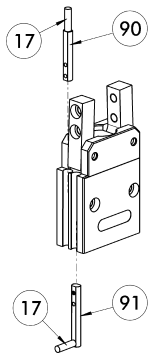

17 Cable outlet
90 MMS 22...-PI1-...-SA sensor
91 MMS 22...-PI1-... sensor

Position query with one programmable position per sensor and electronics integrated in sensor. Programmable via MT magnet teaching tool (included in the scope of delivery) or ST plug teaching tool (optional). Limit position query mounted in C-groove. If the ST plug teaching tools are listed in the table, teaching can only take place with the ST plug teaching tools.

Description	ID	Often combined
MMS PI1 programmable magnetic switches		
MMS 22-PI1-S-M8-PNP	0301160	●
MMSK 22-PI1-S-PNP	0301162	
MMS PI1-HD programmable magnetic switches with stainless steel housing		
MMS 22-PI1-S-M8-PNP-HD	0301110	●
MMSK 22-PI1-S-PNP-HD	0301112	
MMS PI1 programmable magnetic switches with lateral cable outlet		
MMS 22-PI1-S-M8-PNP-SA	0301166	●
MMSK 22-PI1-S-PNP-SA	0301168	

ⓘ Two sensors (closer/S) are required for each unit, plus extension cables as an option. Please note the minimum permitted bending radii for the sensor cables, which are generally 35 mm. Connection cable, cable extensions, and sensor distributors can be found in the table for the MMS 22.

MMS PI2 programmable magnetic switches

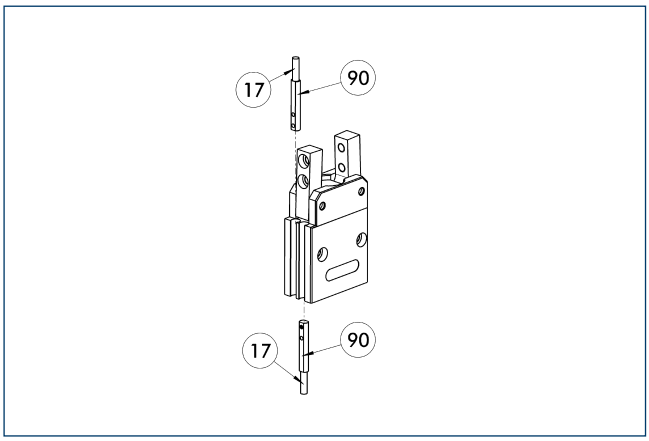

17 Cable outlet

90 MMS 22...-PI2-... sensor

Position query with two programmable positions per sensor and electronics integrated in sensor. Programmable via MT magnet teaching tool (included in the scope of delivery) or ST plug teaching tool (optional). Limit position query mounted in C-groove. If the ST plug teaching tools are listed in the table, teaching can only take place with the ST plug teaching tools.

Description	ID	Often combined
MMS PI2 programmable magnetic switches		
MMS 22-PI2-S-M8-PNP	0301180	●
MMSK 22-PI2-S-PNP	0301182	
MMS PI2-HD programmable magnetic switches with stainless steel housing		
MMS 22-PI2-S-M8-PNP-HD	0301130	●
MMSK 22-PI2-S-PNP-HD	0301132	

ⓘ Per unit one sensor (closer/S) is required, optionally a cable extension. Please note the minimum permitted bending radii for the sensor cables, which are generally 35 mm. Connection cable, cable extensions, and sensor distributors can be found in the table for the MMS-P 22.

MMS-P programmable magnetic switches

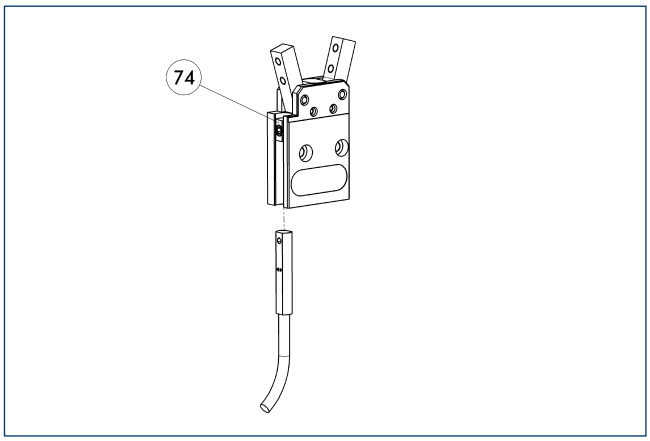

74 Stop for MMS-P

Position monitoring with two programmable positions per sensor. The end position monitoring is mounted in the C-slot.

Description	ID	Often combined
MMS-P programmable magnetic switches		
MMSK-P 22-S-PNP	0301371	
MMS-P 22-S-M8-PNP	0301370	●
Clip for plug / socket		
CLI-M8	0301463	
Connection cables		
KA BG08-L 4P-0500	0307767	●
KA BG08-L 4P-1000	0307768	
KA BW08-L 4P-0500	0307765	
KA BW08-L 4P-1000	0307766	
Sensor distributor		
V2-M8-4P-2XM8-3P	0301380	

ⓘ Per unit one sensor (closer/S) is required, optionally a cable extension. Please note the minimum permitted bending radii for the sensor cables, which are generally 35 mm.

SWG 50

SCHUNK Grippers pneumatic | 2-Finger Angular Grippers | Small Components Gripper

Gripping force, O.D. gripping

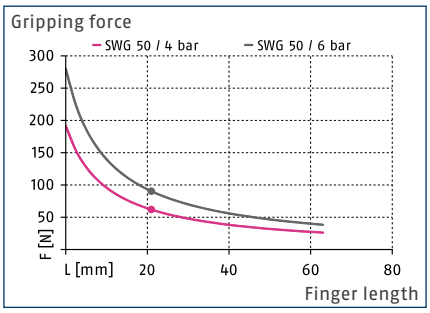

Closing torque curve**

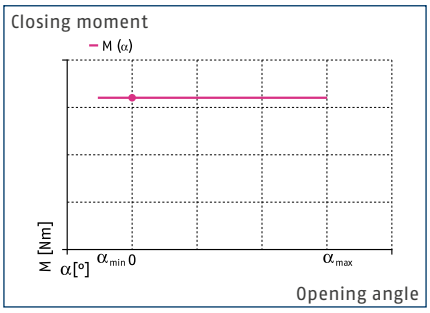

Finger load

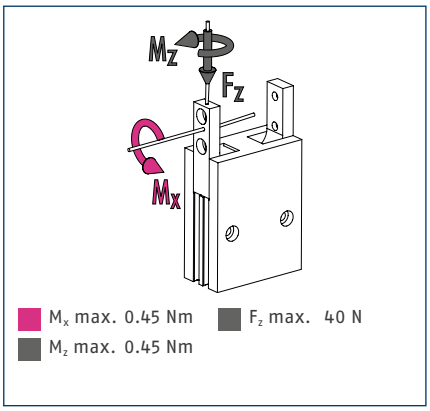

ⓘ The indicated moments and forces are statical values, apply for each base jaw and should not appear simultaneously. If the max. permitted finger weight is exceeded, it is impreative to throttle the air supply so that the jaw movement occurs without any hitting or bouncing. Service life may be reduced.

Technical data

Description		SWG 50
ID		0305109
Opening angle per jaw	[°]	15
Closed angle per jaw up to	[°]	7
Closing moment	[Nm]	2.8
Spring-actuated closing moment	[Nm]	0.6
Weight	[kg]	0.213
Recommended workpiece weight	[kg]	0.46
Fluid consumption per double stroke	[cm³]	3.8
min. / max. operating pressure	[bar]	4/6.5
Nominal operating pressure	[bar]	6
Closing- / opening time	[s]	0.03/0.06
max. permitted finger length	[mm]	42
max. permitted weight per finger	[kg]	0.08
IP class		30
min. / max. ambient temperature	[°C]	5/90
Repeat accuracy	[mm]	0.05

**The diagramm is valid for all opening angle variants.

Main view

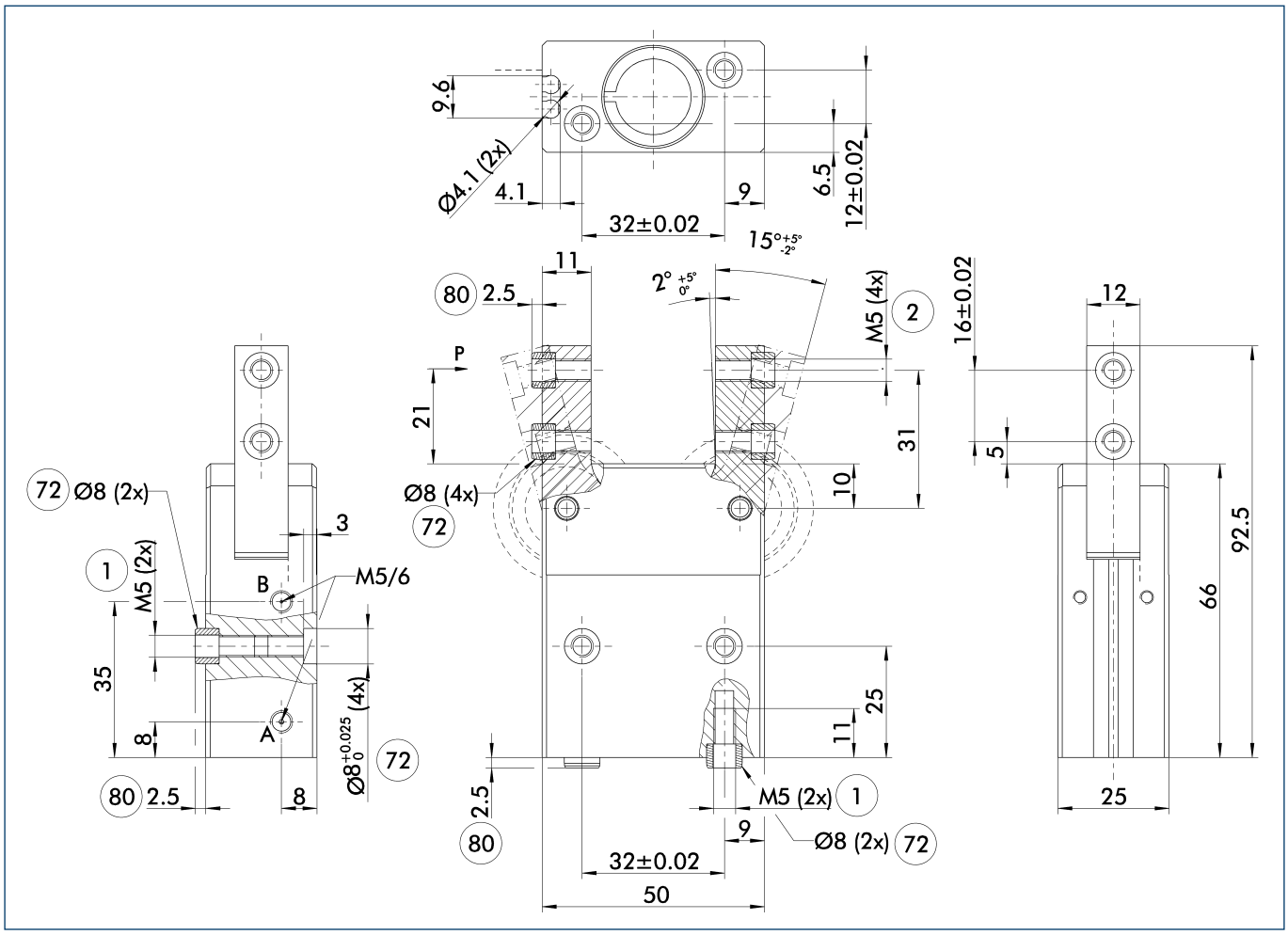

The drawing shows the gripper in the basic version with closed jaws, without dimensional consideration of the options described below.

ⓘ The SDV-P pressure maintenance valve can be used as a gripping force maintenance device (see catalog section on "Accessories").

A, a Main / direct connection, gripper opening

B, b Main / direct connection, gripper closing

(1) Gripper connection

(2) Finger connection

(72) Fit for centering sleeves

(80) Depth of the centering sleeve hole in the mating part

Monitoring for stacked arrangement

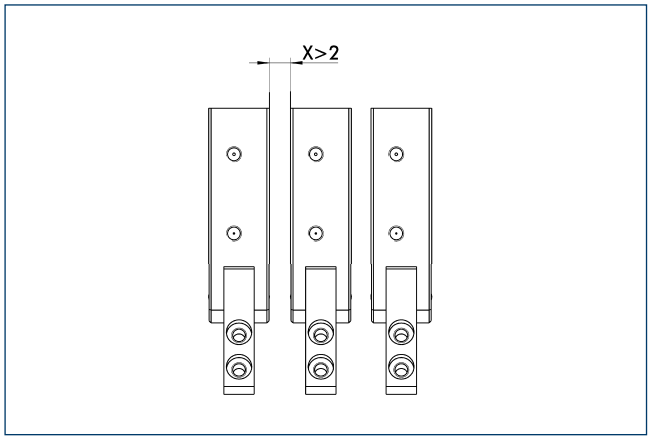

Caution: Monitoring is carried out by magnetic switches, and in case of side-by-side assembly of several units, a minimum distance of X mm between the units must be maintained.

Maximum permitted finger projection

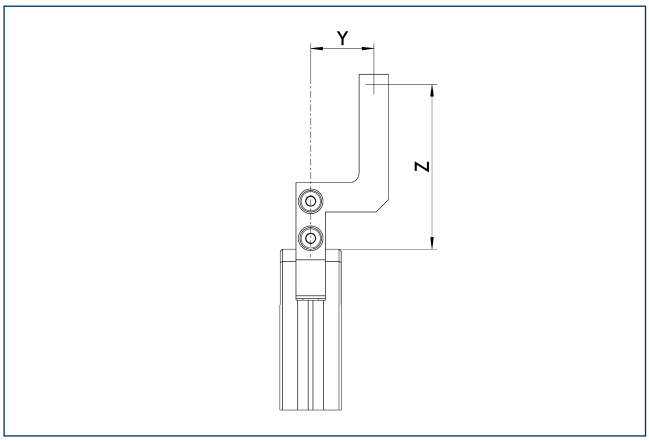

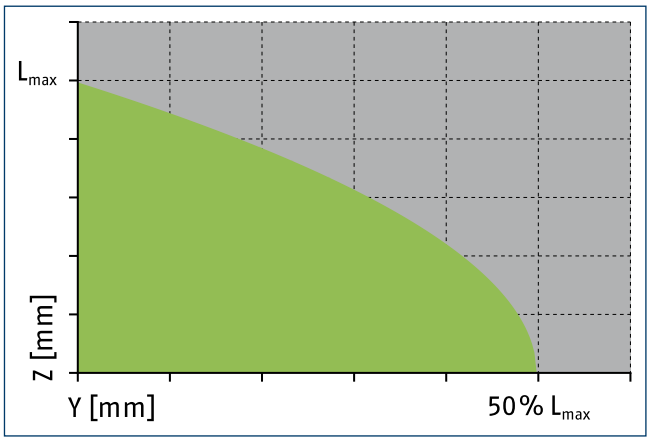

Permitted range Inadmissible range

L_{max} is equivalent to the maximum permitted finger length, see the chart of technical specifications.

SDV-P pressure maintenance valve

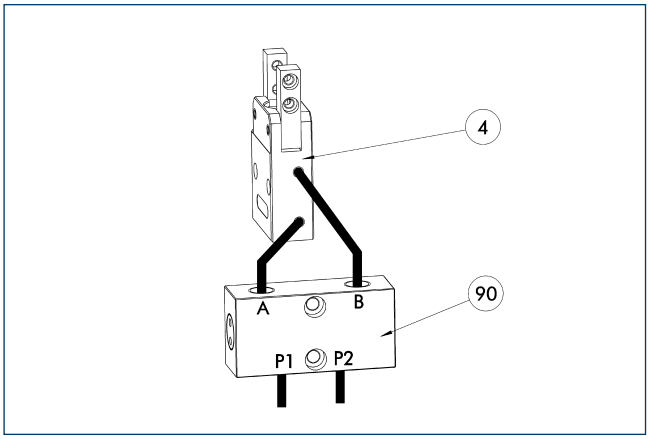

(4) Gripper
(90) SDV-P pressure maintenance valve

The SDV-P pressure maintenance valves ensure that the pressure in the piston chamber of pneumatic gripping, rotary, linear, and quick-change modules is maintained temporarily during an emergency stop.

Description	ID	
Pressure maintenance valve		
SDV-P 04	0403130	

Modular assembly automation

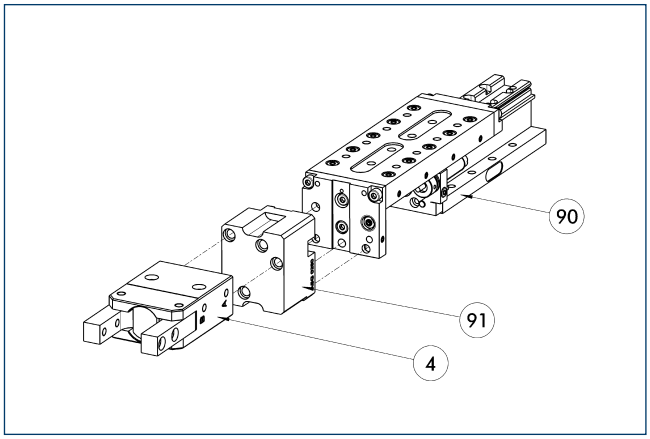

(4) Gripper
(91) ASG adapter plate
(90) CLM / KLM / LM / ELM / ELS / HLM linear module

Gripper and linear modules can be combined with standard adapters out of the modular assembly system. For more information see our catalog "Modular Assembly Automation".

MMS electronic magnetic switches

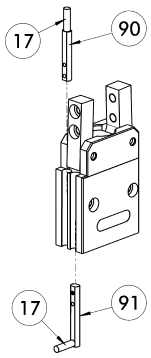

17 Cable outlet
90 MMS 22...-SA sensor
91 MMS 22... sensor

End position monitoring for mounting in the C-slot.

Description	ID	Often combined
MMS electronic magnetic switches		
MMS 22-S-M8-PNP	0301032	●
MMSK 22-S-PNP	0301034	
MMS electronic magnetic switches with lateral cable outlet		
MMS 22-S-M8-PNP-SA	0301042	●
MMSK 22-S-PNP-SA	0301044	
Cable extensions		
KV BW08-SG08 3P-0030-PNP	0301495	
KV BW08-SG08 3P-0100-PNP	0301496	
KV BW08-SG08 3P-0200-PNP	0301497	●
Clip for plug / socket		
CLI-M8	0301463	
Connection cables		
KA BG08-L 3P-0300-PNP	0301622	●
KA BG08-L 3P-0500-PNP	0301623	
KA BW08-L 3P-0300-PNP	0301594	
KA BW08-L 3P-0500-PNP	0301502	
Sensor distributor		
V2-M8	0301775	●
V4-M8	0301746	
V8-M8	0301751	

ⓘ Two sensors (closer/S) are required for each unit, plus extension cables as an option. Please note the minimum permitted bending radii for the sensor cables, which are generally 35 mm.

MMS PI1 programmable magnetic switches

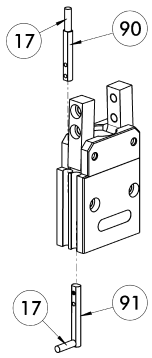

17 Cable outlet
90 MMS 22...-PI1-...-SA sensor
91 MMS 22...-PI1-... sensor

Position query with one programmable position per sensor and electronics integrated in sensor. Programmable via MT magnet teaching tool (included in the scope of delivery) or ST plug teaching tool (optional). Limit position query mounted in C-groove. If the ST plug teaching tools are listed in the table, teaching can only take place with the ST plug teaching tools.

Description	ID	Often combined
MMS PI1 programmable magnetic switches		
MMS 22-PI1-S-M8-PNP	0301160	●
MMSK 22-PI1-S-PNP	0301162	
MMS PI1-HD programmable magnetic switches with stainless steel housing		
MMS 22-PI1-S-M8-PNP-HD	0301110	●
MMSK 22-PI1-S-PNP-HD	0301112	
MMS PI1 programmable magnetic switches with lateral cable outlet		
MMS 22-PI1-S-M8-PNP-SA	0301166	●
MMSK 22-PI1-S-PNP-SA	0301168	

ⓘ Two sensors (closer/S) are required for each unit, plus extension cables as an option. Please note the minimum permitted bending radii for the sensor cables, which are generally 35 mm. Connection cable, cable extensions, and sensor distributors can be found in the table for the MMS 22.

MMS PI2 programmable magnetic switches

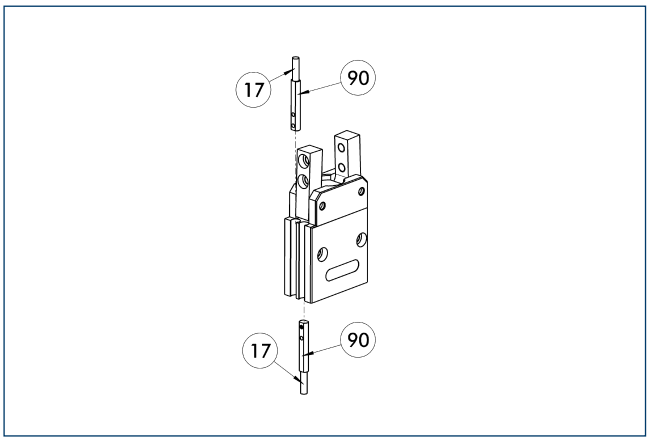

17 Cable outlet

90 MMS 22...-PI2-... sensor

Position query with two programmable positions per sensor and electronics integrated in sensor. Programmable via MT magnet teaching tool (included in the scope of delivery) or ST plug teaching tool (optional). Limit position query mounted in C-groove. If the ST plug teaching tools are listed in the table, teaching can only take place with the ST plug teaching tools.

Description	ID	Often combined
MMS PI2 programmable magnetic switches		
MMS 22-PI2-S-M8-PNP	0301180	●
MMSK 22-PI2-S-PNP	0301182	
MMS PI2-HD programmable magnetic switches with stainless steel housing		
MMS 22-PI2-S-M8-PNP-HD	0301130	●
MMSK 22-PI2-S-PNP-HD	0301132	

ⓘ Per unit one sensor (closer/S) is required, optionally a cable extension. Please note the minimum permitted bending radii for the sensor cables, which are generally 35 mm. Connection cable, cable extensions, and sensor distributors can be found in the table for the MMS-P 22.

MMS-P programmable magnetic switches

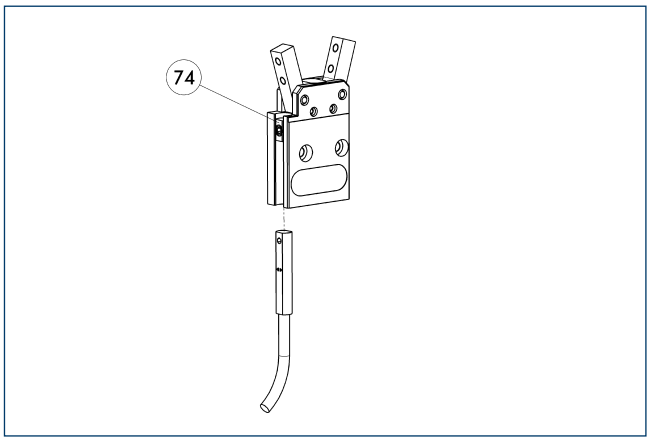

74 Stop for MMS-P

Position monitoring with two programmable positions per sensor. The end position monitoring is mounted in the C-slot.

Description	ID	Often combined
MMS-P programmable magnetic switches		
MMSK-P 22-S-PNP	0301371	
MMS-P 22-S-M8-PNP	0301370	●
Clip for plug / socket		
CLI-M8	0301463	
Connection cables		
KA BG08-L 4P-0500	0307767	●
KA BG08-L 4P-1000	0307768	
KA BW08-L 4P-0500	0307765	
KA BW08-L 4P-1000	0307766	
Sensor distributor		
V2-M8-4P-2XM8-3P	0301380	

ⓘ Per unit one sensor (closer/S) is required, optionally a cable extension. Please note the minimum permitted bending radii for the sensor cables, which are generally 35 mm.

Reliable. Robust. Compact.
PWG-plus Universal Gripper

Robust 2-finger angular gripper with oval piston and bone drive

Field of Application

For universal use in clean and slightly dirty environments.

Advantages – Your benefit

Variable top jaw design since grippers are available in jaw versions and finger versions via intermediate jaws

Gripping force maintenance device for a high process reliability

Stroke limitation on opening optional available for tight spaces and short cycle times

Can be used in tough environments due to the gripper's sturdy construction

Sizes	Weight	Gripping moment	Angle per jaw	Workpiece weight
Quantity: 8	0.13 .. 11.3 kg	3.32 .. 585 Nm	15°	0.4 .. 11.57 kg

Functional Description

The kinematics transforms this vertical motion into a synchronous and rotatory gripping motion of the base jaws.

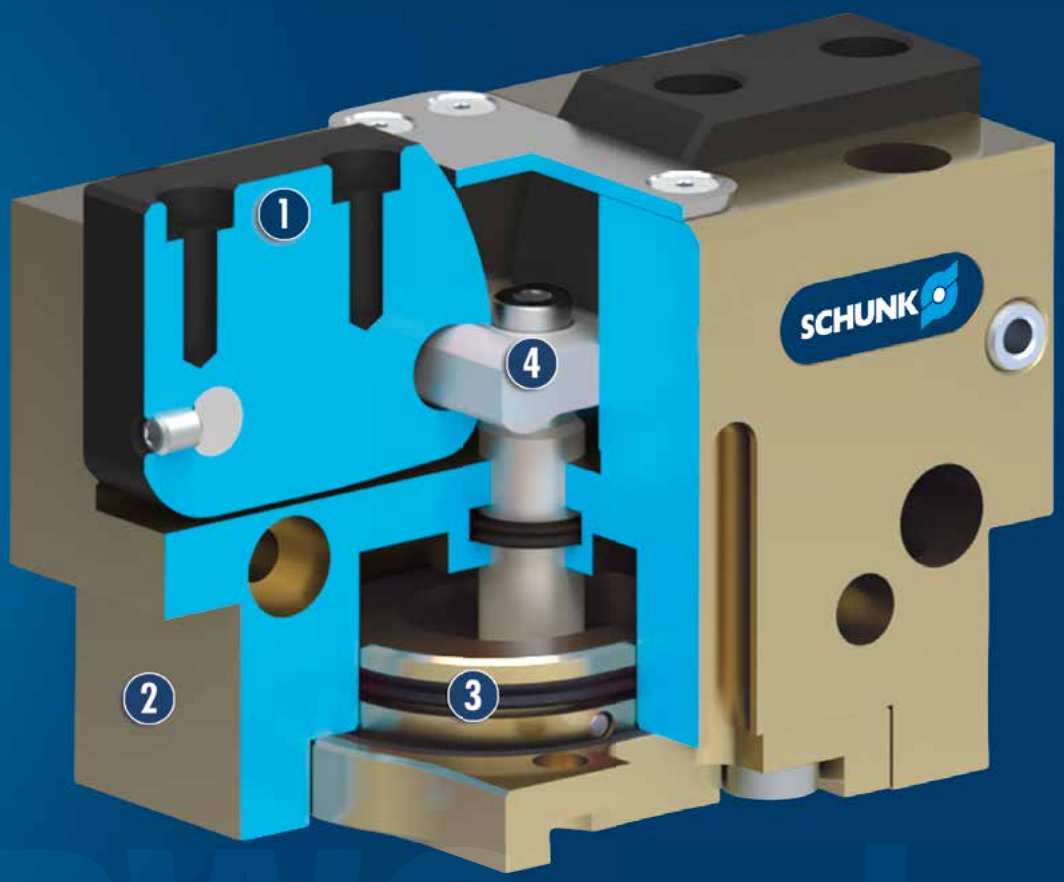

① **Base jaw**
for the connection of workpiece-specific gripper fingers

② **Housing**
Weight-optimized through application of high-strength aluminum alloy

③ **Drive**
Pneumatic oval piston for maximum driving force

④ **Lever mechanism**
for precise and synchronized gripping

CAD data, operating manuals and other current product documents are available at **www.schunk.com**

General Notes about the Series

Operating principle: positively guided lever gear

Housing material: Aluminum

Base jaw material: hard-anodized, high strength aluminum

Actuation: pneumatic, with filtered compressed air as per DIN ISO 8573-1: 7 4 4

Warranty: 24 months (details, general terms and conditions and operating manuals can be downloaded at www.schunk.com)

Scope of delivery: Centering sleeves, O-rings for direct connection, throttle restrictor (for size 50-200), assembly and operating manual with declaration of incorporation

Gripping moment: gripping moment is the arithmetic total of gripping moments for each claw jaw.

Finger length: is measured from the upper edge of the gripper housing in direction to the main axis. If the max. admissible finger length is exceeded, the speed of jaw motions have to be reduced and / or the opening angle has to be diminished, as it is done with heavy fingers. The service life of the gripper can shorten.

Repeat accuracy: is defined as the spread of the limit position after 100 consecutive strokes.

Workpiece weight: is calculated for a force-fit connection with a coefficient of friction of 0.1 and a safety factor of 2 against slippage of the workpiece on acceleration due to gravity g. Considerably heavier workpiece weights are permitted with form-fit gripping.

Closing and opening times: are purely the times that the base jaws or fingers are in motion. Valve switching times, hose filling times or PLC reaction times are not included in the above times and must be taken into consideration when determining cycle times.

Application example

Pick & place unit for light to medium-weight components

1. LPP Line Gantry pneumatic
2. PWG-plus 2-Finger Angular Gripper

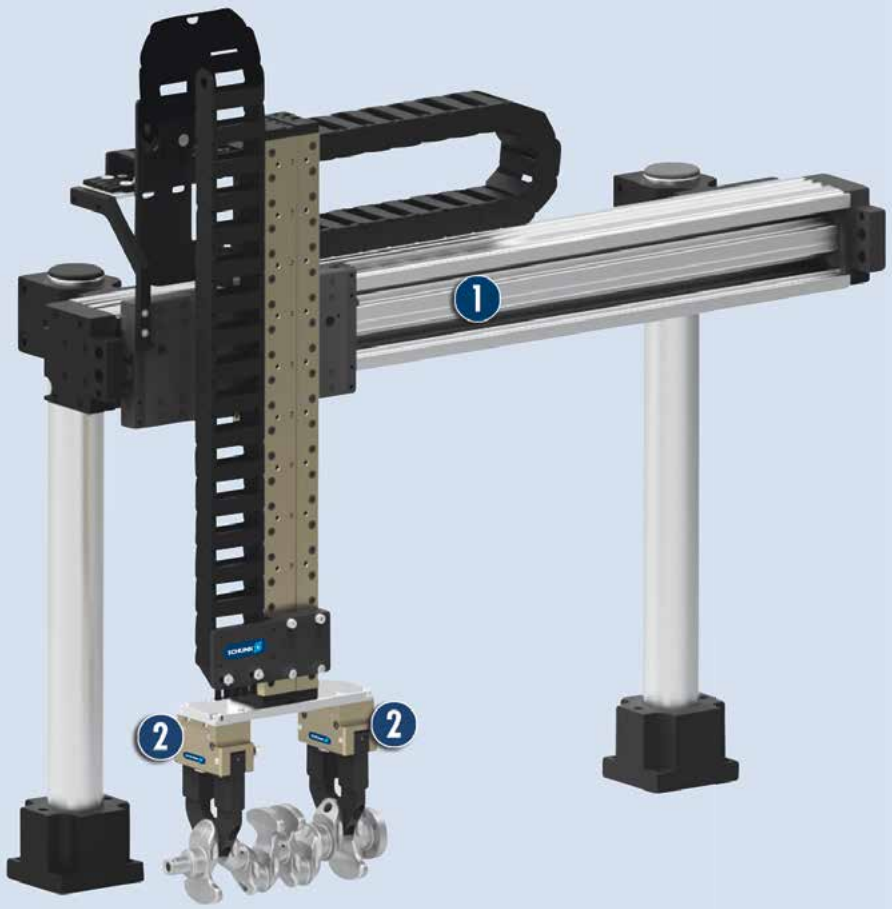

SCHUNK offers more ...

The following components make the product PWG-plus even more productive – the suitable addition for the highest functionality, flexibility, reliability, and controlled production.

Centering Sleeves

Fittings

Inductive Proximity Switches

Magnetic Switches

Sensor Distributor

Gripper Pads

Sensor Cables

Plastic Inserts

SDV-P Pressure Maintenance Valve

AGE-F Compensation Unit

CWS Compact Change System

TCU Tolerance Compensation Unit

ⓘ Further information regarding the products can be found on the following product pages or at www.schunk.com. Please contact us for further information: SCHUNK technical hotline +49-7133-103-2696

Options and special Information

Gripping force maintenance version AS / IS: The mechanical gripping force maintenance version ensures a minimum gripping force also in the case of a drop in pressure. In the AS / S version this has the effect of a closing force, in the IS version of an opening force.
High-temperature version V/HT: for use in hot environments
Force intensified version KVZ: if higher gripping forces are required
Additional versions: Various options can be combined. Numerous additional options are also available – just tell us what your task is!

SCHUNK PWG-plus grippers

Accessories at a glance

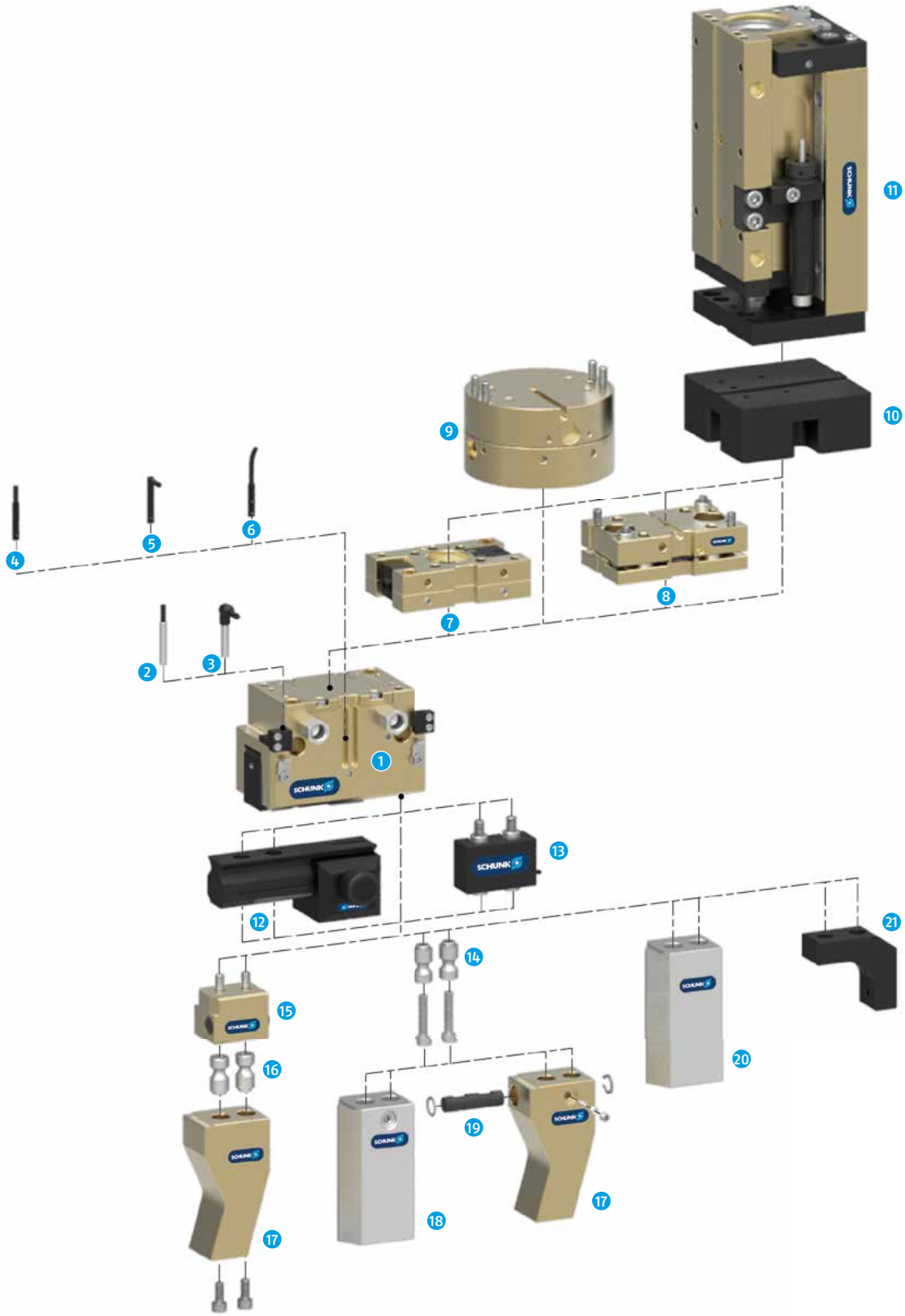

1 **PWG-plus**
Universal 2-finger angular gripper with high gripping force

2 **IN ...**
Inductive proximity switch with integrated cable and axial cable outlet

3 **IN ...-SA**
Inductive proximity switch with integrated cable and side cable outlet

4 **MMS 22**
Magnetic switch with axial cable outlet for monitoring one position

4 **MMS 22-PI1**
Magnetic switch with axial cable outlet for monitoring one freely programmable position

4 **MMS 22-PI2**
Magnetic switch with axial cable outlet for monitoring two freely programmable positions

5 **MMS 22-PI1-SA**
Magnetic switch with side cable outlet for monitoring one freely programmable position

5 **MMS 22-SA**
Magnetic switch with side cable outlet for monitoring one position

6 **MMS-P**
Magnetic switch with axial cable outlet for monitoring two freely programmable positions, with integrated teach function

7 **CWS**
Manual changing system with integrated air feed-through for easy changing of the handling components

8 **TCU**
Tolerance compensation unit for compensating smaller tolerances in the plane

9 **AGE**
Compensation unit for compensating larger tolerances in the X and Y axis

10 **ASG**
Adapter plate for combining many different automation components in a modular system

11 **CLM**
Linear module with pneumatic drive and pre-loaded junction rollers with zero play

12 **UZB**
The universal intermediate jaw allow fast and safe adjustment of top jaws on the gripper, without the use of tools

13 **FMS**
Power measurement jaws for measuring gripping forces, workpiece weights or dimensional deviations

14 **BSWS-AR**
Adapter coupling of the jaw quick-change system for fast, manual changing of top jaws

15 **BSWS-B**
Locking mechanism of the jaw quick-change system for fast, manual changing of top jaws

16 **BSWS-A**
Adapter coupling of the jaw quick-change system for adaptation to the customized finger

17 **Customized finger**

18 **BSWS-ABR**
Aluminum finger blank with interface of the jaw quick-change system

18 **BSWS-SBR**
Steel finger blank with interface of the jaw quick-change system

19 **BSWS-UR**
Locking mechanism for integration of the jaw quick-change system in customized fingers

20 **ABR / SBR**
Steel or aluminum finger blanks with standardized screw connection pattern

21 **ZBA**
Intermediate jaws for reorientation of the bolt-on surface

PWG-plus 50

SCHUNK Grippers pneumatic | 2-Finger Angular Grippers | Universal Gripper

Gripping force, O.D. gripping

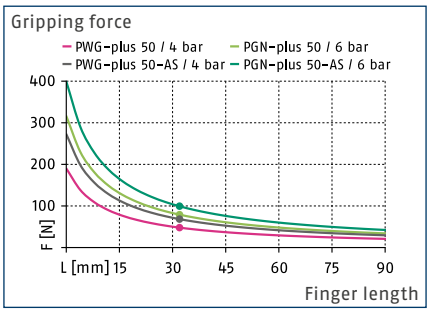

Closing moment curve

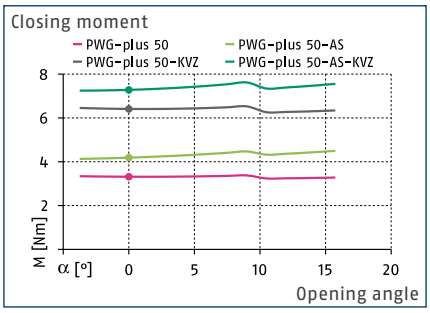

Forces and moments

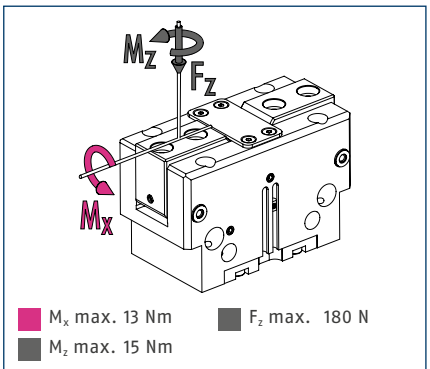

ⓘ The indicated moments and forces are statical values, apply for each base jaw and should not appear simultaneously. If the max. permitted finger weight is exceeded, it is impreative to throttle the air supply so that the jaw movement occurs without any hitting or bouncing. Service life may be reduced.

Technical data

Description		PWG-plus 50	PWG-plus 50-AS
ID		0311610	0311611
Opening angle per jaw	[°]	15	15
Closed angle per jaw up to	[°]	3	3
Closing moment	[Nm]	3.32	4.19
Spring-actuated closing moment	[Nm]		0.87
Weight	[kg]	0.13	0.17
Recommended workpiece weight	[kg]	0.4	0.4
Fluid consumption per double stroke	[cm³]	5.5	9
min. / max. operating pressure	[bar]	2/8	4/6.5
Nominal operating pressure	[bar]	6	6
Closing- / opening time	[s]	0.06/0.06	0.06/0.1
max. permitted finger length	[mm]	64	64
max. mass moment of inertia per jaw*	[kgcm²]	5.3	5.3
IP class		30	30
min. / max. ambient temperature	[°C]	5/90	5/90
Repeat accuracy	[mm]	0.02	0.02
Options and their characteristics			
High-temperature version		39311610	39311611
min. / max. ambient temperature	[°C]	5/130	5/130
Force intensified version		0311615	0311616
Closing moment	[Nm]	6.41	7.28
Spring-actuated closing moment			0.87
Weight	[kg]	0.17	0.22
Maximum pressure	[bar]	6	6
max. permitted finger length	[mm]	64	64

*The unit can be actuated without an external customized throttling at the given value of max. mass moment of inertia per jaw. In case of higher mass moments of inertia, an additional throttling is possible.
The full gripping force according to the data table is only realised after around 100 gripping cycles.

Main view

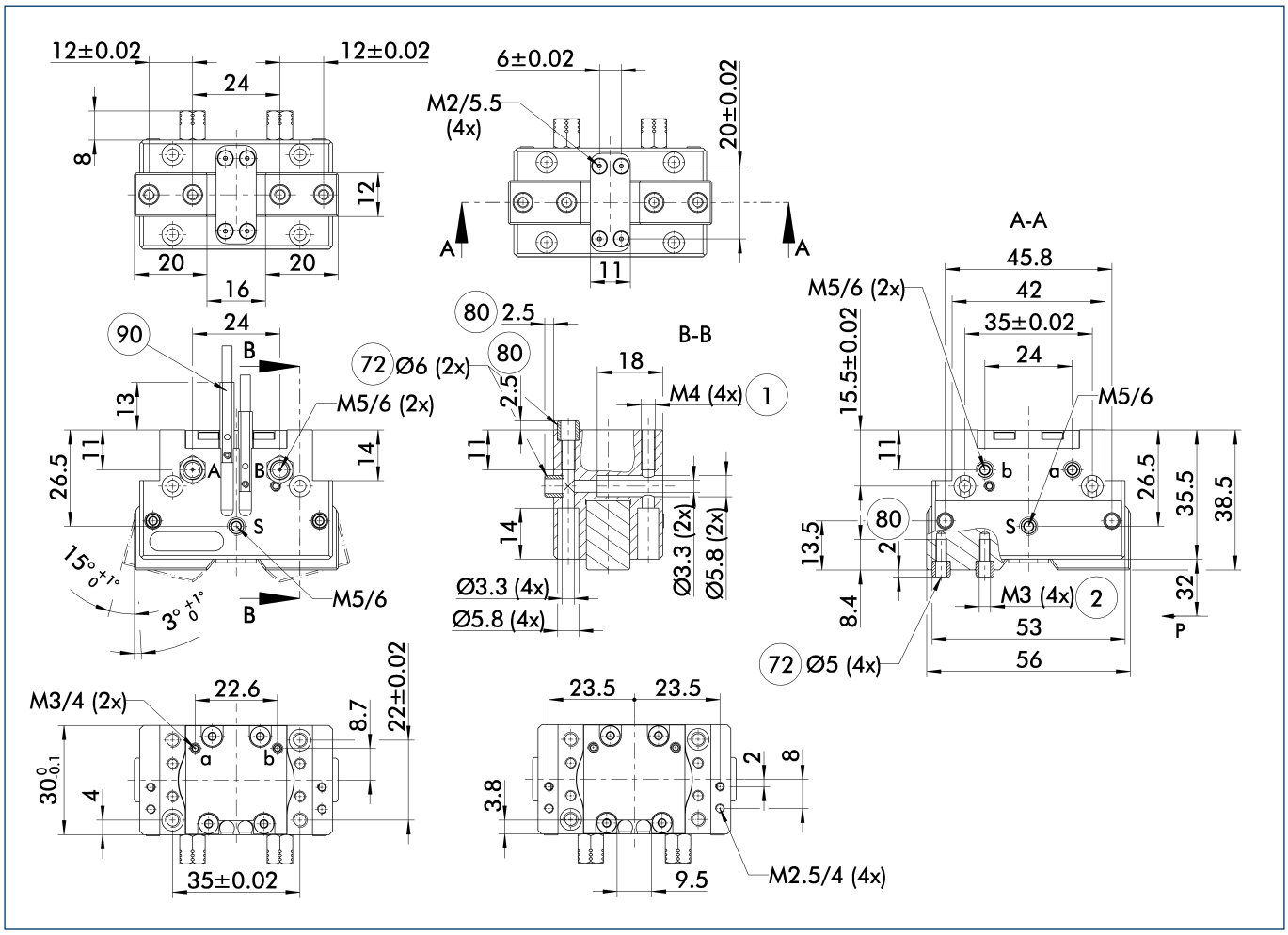

The drawing shows the gripper in the basic version with closed jaws, without dimensional consideration of the options described below.

ⓘ The SDV-P pressure maintenance valve can also be used for I.D. or O.D. gripping alternatively or in addition to the spring-loaded, mechanical gripping force maintenance device (see catalog section on "Accessories").

A, a Main / direct connection, gripper opening

B, b Main / direct connection, gripper closing

S Air purge connection (0.5 ... 1 bar)

1 Gripper connection

2 Finger connection

72 Fit for centering sleeves

80 Depth of the centering sleeve hole in the mating part

90 MMS 22... sensor

Maximum permitted finger projection

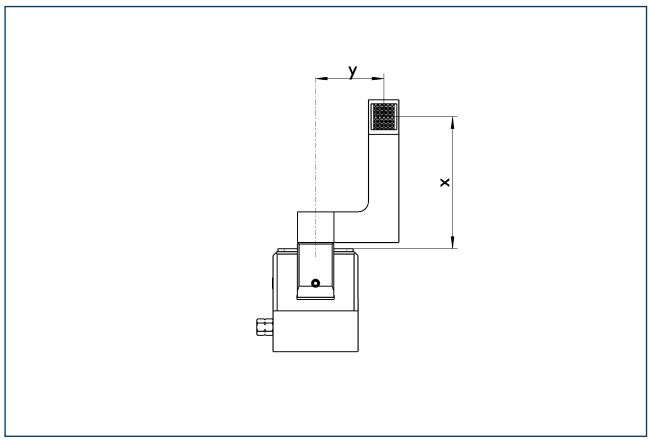

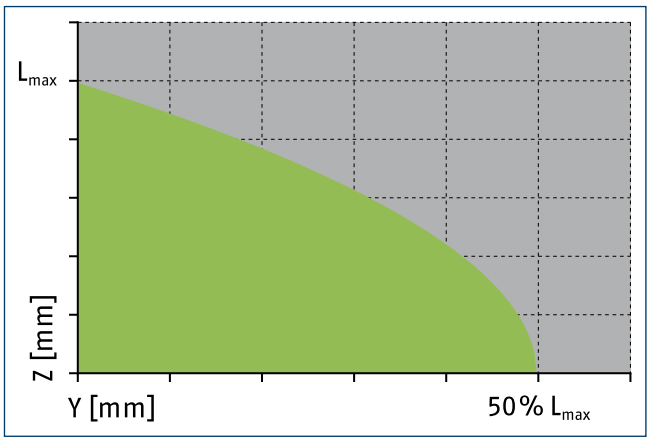

Permitted range

Inadmissible range

L_{max} is equivalent to the maximum permitted finger length, see the chart of technical specifications.

Hose-free direct connection M3

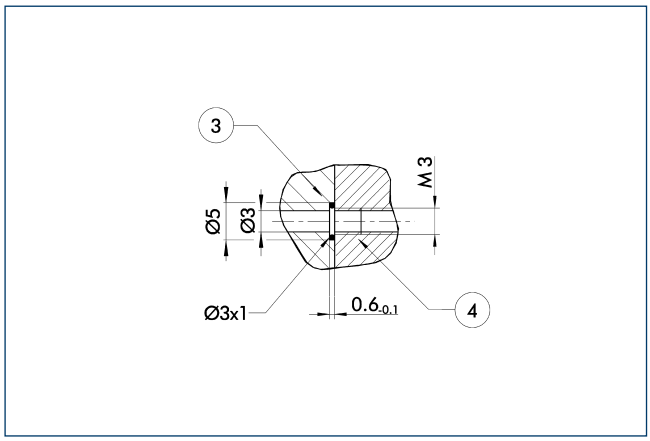

(3) Adapter (4) Gripper

The direct connection is used for supplying compressed air without hoses. Instead, the pressure medium is fed through bore-holes in the mounting plate.

Gripping force maintenance device

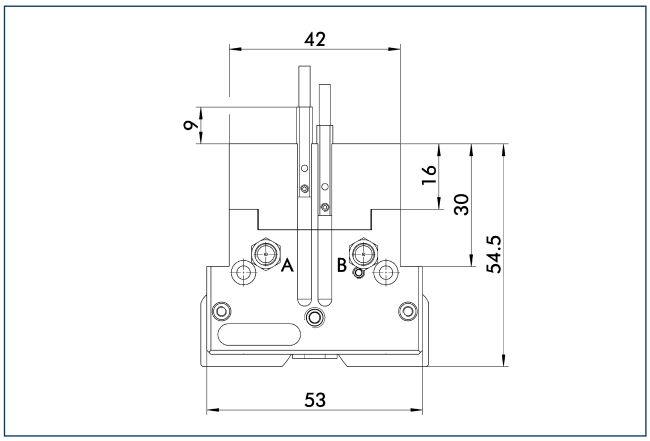

The mechanical gripping force maintenance device ensures a minimum gripping force even in case of pressure drop. This acts as closing force in the AS version. In addition, the gripping force maintenance device can also be used for increasing the gripping force or for single-acting gripping.

Shaft support

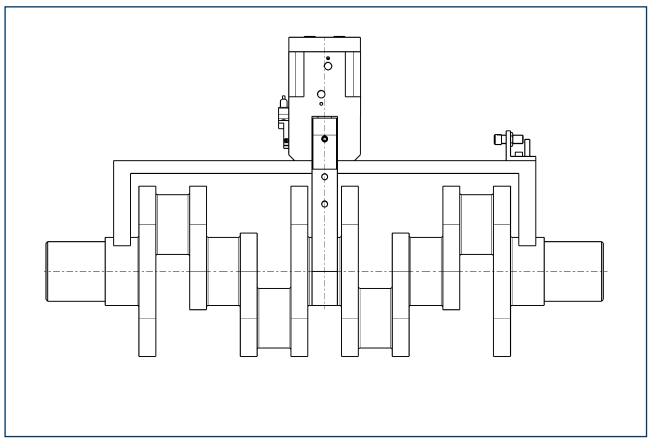

The complete assembly group for handling of crank or cam shaft can be supplied on request.

Force intensified version

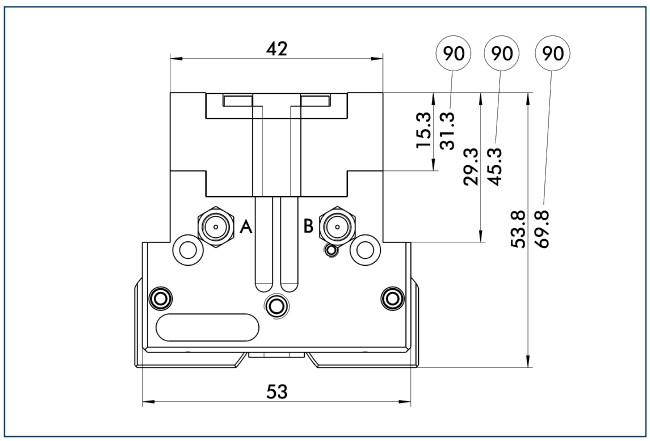

(90) For AS version

The KVZ power booster cylinder increases gripping forces for opening and closing. A second piston connected in a series increases the force on the diagonal pull for this purpose. If applicable, observe the additional installation height for combination with an element for maintenance of gripping force.

Mounting kit for opening angle limitation

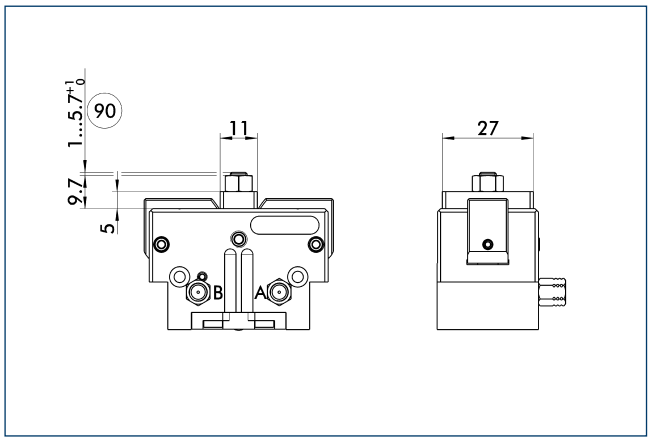

(90) Max. adjustment

Stepless adjustment of the opening angle is possible with a mounting kit.

Description	ID	
Stroke adjustment		
HVE-PWG-plus 50	0311713	

BSWS jaw quick-change systems

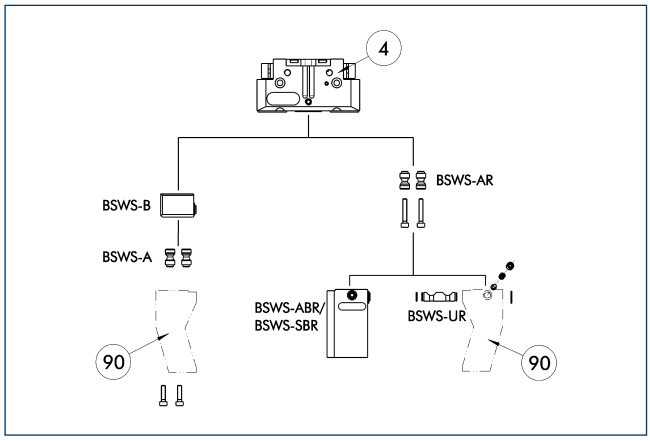

(4) Gripper

(90) Customized gripper fingers

There are various jaw quick-change systems available for the grippers. For detailed information, refer to the appropriate product.

Description	ID	
Jaw quick-change system adapter		
BSWS-AR 50	0300091	
BSWS-A 50	0303020	
Jaw quick-change system base		
BSWS-B 50	0303021	
Finger blanks with jaw quick-change system		
BSWS-ABR-PGZN-plus 50	0300071	
BSWS-SBR-PGZN-plus 50	0300081	
Jaw quick-change system reversed		
BSWS-UR 50	0302990	

ⓘ Only the systems listed in the table can be used.

SDV-P pressure maintenance valve

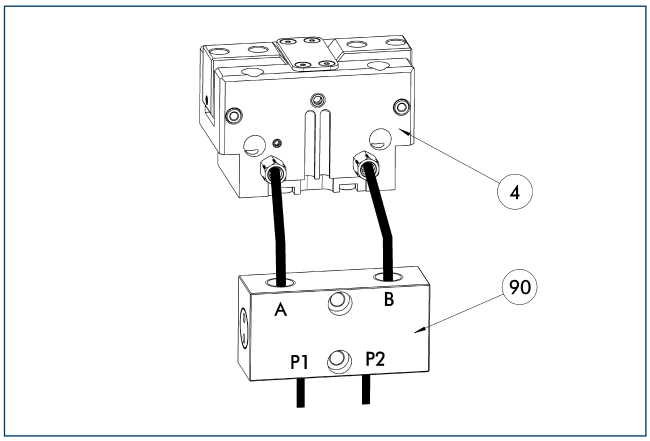

(4) Gripper

(90) SDV-P pressure maintenance valve

The SDV-P pressure maintenance valves ensure that the pressure in the piston chamber of pneumatic gripping, rotary, linear, and quick-change modules is maintained temporarily during an emergency stop.

Description	ID	
Pressure maintenance valve		
SDV-P 04	0403130	

ZBA L-plus 50 intermediate jaws

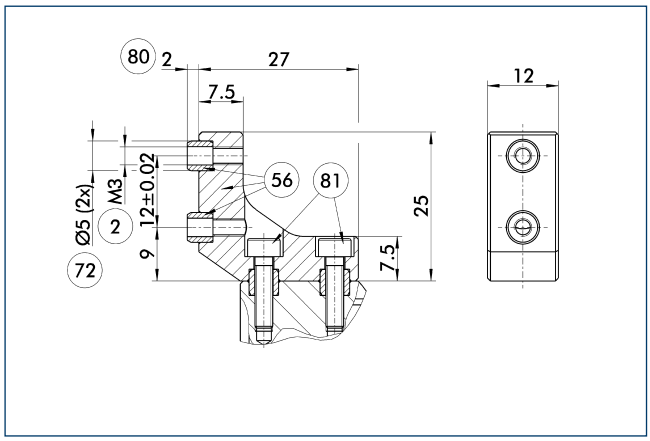

(2) Finger connection
(56) Included in delivery
(72) Fit for centering sleeves
(80) Depth of the centering sleeve hole in the mating part
(81) Not included in the scope of delivery

Optionally intermediate jaws can be used, enabling direct connection and alignment of top jaws and various standard accessories in Z-direction.

Description	ID	Material	Scope of delivery
Intermediate jaws			
ZBA-L-plus 50	0311712	Aluminum	1

FMS-ZBA / ZBP 50 force-measuring jaws

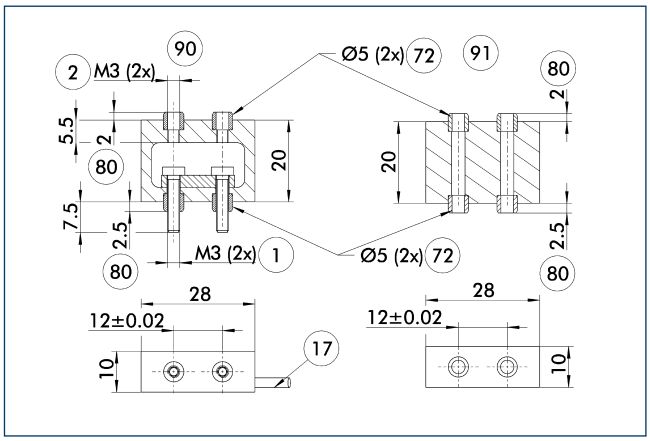

(1) Gripper connection
(2) Finger connection
(17) Cable outlet
(72) Fit for centering sleeves
(80) Depth of the centering sleeve hole in the mating part
(90) Active intermediate jaws
(91) Passive intermediate jaws

Force measuring jaws measure gripping forces, but can also determine workpiece weights or dimensional deviations. There are active and passive intermediate jaws (FMS-ZBA or FMS-ZBP). At least one active force measuring jaw is required per gripper, the rest can be passive. For each active jaw, a FMS-A control unit and a FMS-AK connection cable are required.

Description	ID	Often combined
Active intermediate jaws		
FMS-ZBA 50	0301830	
Passive intermediate jaws		
FMS-ZBP 50	0301831	
Connection cables		
FMS-AK0200	0301820	●
FMS-AK0500	0301821	
FMS-AK1000	0301822	
FMS-AK2000	0301823	
Electronic processor		
FMS-A1	0301810	

ABR- / SBR-PGZN-plus 50 finger blanks

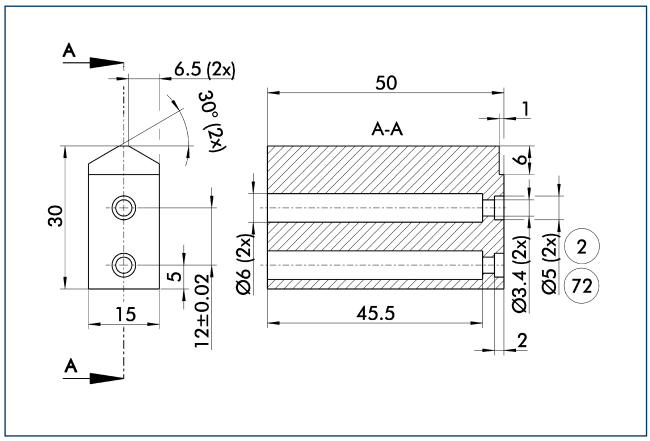

(2) Finger connection
(72) Fit for centering sleeves

Finger blanks for customized subsequent machining.

Description	ID	Material	Scope of delivery
Finger blanks			
ABR-PGZN-plus 50	0300009	Aluminum	1
SBR-PGZN-plus 50	0300019	16MnCr5	1

Attachment valves

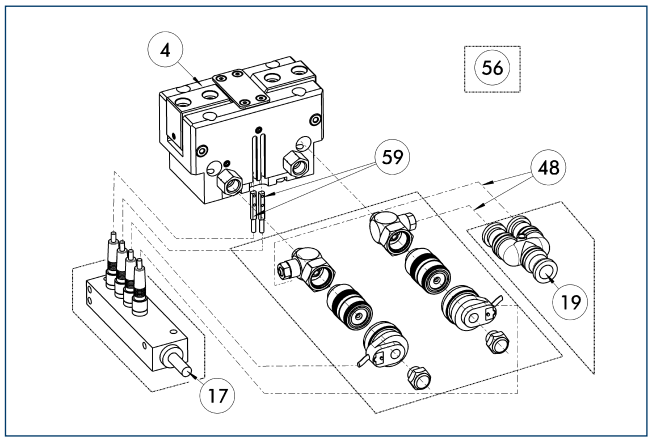

(4) Gripper
(48) Hose
(17) Cable outlet
(56) Included in delivery
(19) Air connection
(59) Monitoring gripping

For each unit one attachment valve ABV is required, optional with distributor for sensors and valves. Attachment valves increase the efficiency, reduce the installation work and air consumption and simplify air supply. For details please refer to the "Accessories" catalog section.

Description	ID	Often combined
Attachment valves		
ABV-MV15-M5	0303323	
ABV-MV15-M5-V2-M8	0303386	
ABV-MV15-M5-V4-M8	0303356	●
ABV-MV15-M5-V8-M8	0303357	

Modular assembly automation

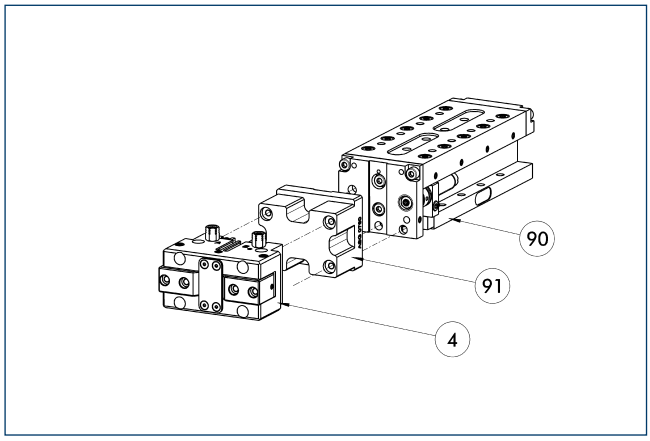

(4) Gripper
(91) ASG adapter plate
(90) CLM / KLM / LM / ELM / ELS / HLM linear module

Gripper and linear modules can be combined with standard adapters out of the modular assembly system. For more information see our catalog "Modular Assembly Automation".

Mounting kit for IN 40 proximity switches

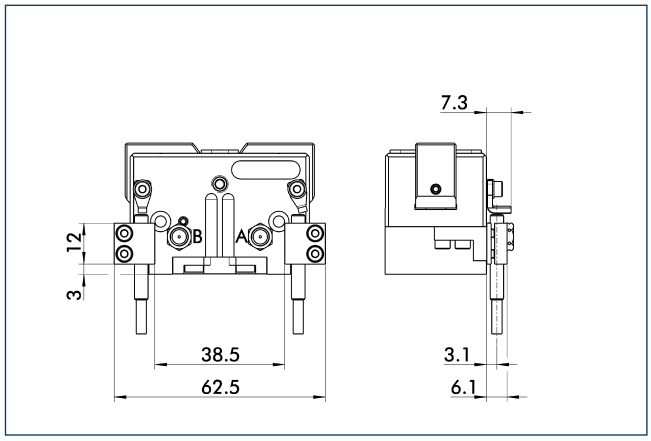

Limit position monitor can be mounted with mounting kit.

Description	ID	
Mounting kit for proximity switch		
AS-IN40-PWG-plus 50	0311710	

ⓘ This mounting kit needs to be ordered optionally as an accessory.

IN 40 inductive proximity switches

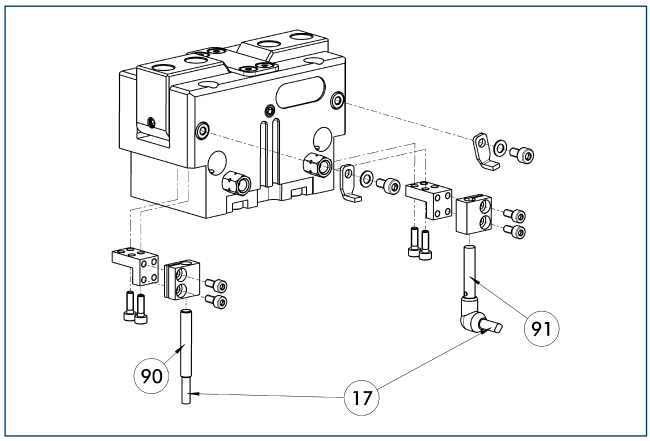

(17) Cable outlet
(91) IN ...-SA sensor
(90) IN ... sensor

Limit position monitor can be mounted with mounting kit.

Description	ID	Often combined
Mounting kit for proximity switch		
AS-IN40-PWG-plus 50	0311710	
Inductive proximity switches		
IN 40-S-M12	0301574	
IN 40-S-M8	0301474	●
INK 40-S	0301555	
Inductive proximity switches with lateral outlet		
IN 40-S-M12-SA	0301577	
IN 40-S-M8-SA	0301473	●
INK 40-S-SA	0301565	
Cable extensions		
KV BG12-SG12 3P-0030-PNP	0301999	
KV BG12-SG12 3P-0060-PNP	0301998	
KV BW08-SG08 3P-0030-PNP	0301495	
KV BW08-SG08 3P-0100-PNP	0301496	
KV BW08-SG08 3P-0200-PNP	0301497	●
KV BW12-SG12 3P-0030-PNP	0301595	
KV BW12-SG12 3P-0100-PNP	0301596	
KV BW12-SG12 3P-0200-PNP	0301597	
Clip for plug / socket		
CLI-M12	0301464	
CLI-M8	0301463	
Connection cables		
KA BG08-L 3P-0300-PNP	0301622	●
KA BG08-L 3P-0500-PNP	0301623	
KA BG12-L 3P-0500-PNP	30016369	
KA BW08-L 3P-0300-PNP	0301594	
KA BW08-L 3P-0500-PNP	0301502	
KA BW12-L 3P-0300-PNP	0301503	
KA BW12-L 3P-0500-PNP	0301507	
Sensor distributor		
V2-M8	0301775	●
V2-M12	0301776	●

ⓘ Two sensors (closer/S) are required for each unit, plus extension cables as an option. This mounting kit needs to be ordered optionally as an accessory. Please note the minimum permitted bending radii for the sensor cables, which are generally 35 mm.

Mounting kit for IN 80 proximity switches

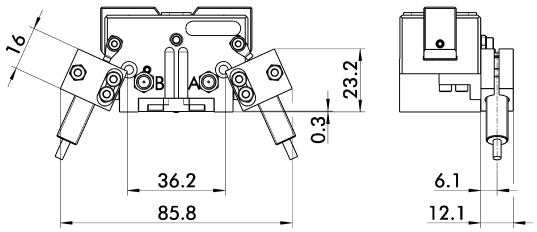

Limit position monitor can be mounted with mounting kit.

Description	ID	
Mounting kit for proximity switch		
AS-IN80-PWG-plus 50	0311711	

ⓘ This mounting kit needs to be ordered optionally as an accessory.

IN 80 inductive proximity switches

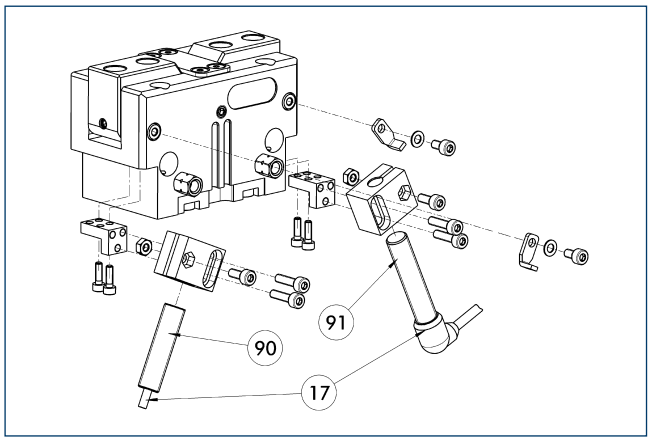

(17) Cable outlet
(91) IN ...-SA sensor
(90) IN ... sensor

Limit position monitor can be mounted with mounting kit.

Description	ID	Often combined
Mounting kit for proximity switch		
AS-IN80-PWG-plus 50	0311711	
Inductive proximity switches		
IN 80-S-M12	0301578	
IN 80-S-M8	0301478	●
IN-C 80-S-M8	0301475	
INK 80-S	0301550	
INK 80-SL	0301579	
Inductive proximity switches with lateral outlet		
IN 80-S-M12-SA	0301587	
IN 80-S-M8-SA	0301483	●
INK 80-S-SA	0301566	
Cable extensions		
KV BG12-SG12 3P-0030-PNP	0301999	
KV BG12-SG12 3P-0060-PNP	0301998	
KV BW08-SG08 3P-0030-PNP	0301495	
KV BW08-SG08 3P-0100-PNP	0301496	
KV BW08-SG08 3P-0200-PNP	0301497	●
KV BW12-SG12 3P-0030-PNP	0301595	
KV BW12-SG12 3P-0100-PNP	0301596	
KV BW12-SG12 3P-0200-PNP	0301597	
Clip for plug / socket		
CLI-M12	0301464	
CLI-M8	0301463	
Connection cables		
KA BG08-L 3P-0300-PNP	0301622	●
KA BG08-L 3P-0500-PNP	0301623	
KA BG12-L 3P-0500-PNP	30016369	
KA BW08-L 3P-0300-PNP	0301594	
KA BW08-L 3P-0500-PNP	0301502	
KA BW12-L 3P-0300-PNP	0301503	
KA BW12-L 3P-0500-PNP	0301507	
Sensor distributor		
V2-M12	0301776	●
V2-M8	0301775	●

ⓘ Two sensors (closer/S) are required for each unit, plus extension cables as an option. This mounting kit needs to be ordered optionally as an accessory. Please note the minimum permitted bending radii for the sensor cables, which are generally 35 mm.

MMS electronic magnetic switches

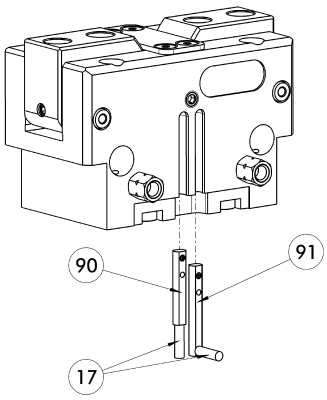

(17) Cable outlet
(91) MMS 22...-SA sensor
(90) MMS 22... sensor

End position monitoring for mounting in the C-slot.

Description	ID	Often combined
MMS electronic magnetic switches		
MMS 22-S-M8-PNP	0301032	●
MMSK 22-S-PNP	0301034	
MMS electronic magnetic switches with lateral cable outlet		
MMS 22-S-M8-PNP-SA	0301042	●
MMSK 22-S-PNP-SA	0301044	
Cable extensions		
KV BW08-SG08 3P-0030-PNP	0301495	
KV BW08-SG08 3P-0100-PNP	0301496	
KV BW08-SG08 3P-0200-PNP	0301497	●
Clip for plug / socket		
CLI-M8	0301463	
Connection cables		
KA BG08-L 3P-0300-PNP	0301622	●
KA BG08-L 3P-0500-PNP	0301623	
KA BW08-L 3P-0300-PNP	0301594	
KA BW08-L 3P-0500-PNP	0301502	
Sensor distributor		
V2-M8	0301775	●
V4-M8	0301746	
V8-M8	0301751	

ⓘ Two sensors (closer/S) are required for each unit, plus extension cables as an option. Please note the minimum permitted bending radii for the sensor cables, which are generally 35 mm.

MMS PI1 programmable magnetic switches

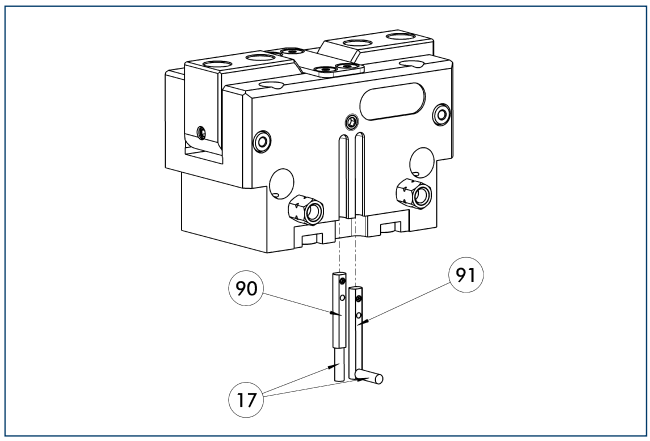

(17) Cable outlet
(91) MMS 22...-PI1-...-SA sensor
(90) MMS 22...-PI1-... sensor

Position query with one programmable position per sensor and electronics integrated in sensor. Programmable via MT magnet teaching tool (included in the scope of delivery) or ST plug teaching tool (optional). Limit position query mounted in C-groove. If the ST plug teaching tools are listed in the table, teaching can only take place with the ST plug teaching tools.

Description	ID	Often combined
MMS PI1 programmable magnetic switches		
MMS 22-PI1-S-M8-PNP	0301160	●
MMSK 22-PI1-S-PNP	0301162	
MMS PI1-HD programmable magnetic switches with stainless steel housing		
MMS 22-PI1-S-M8-PNP-HD	0301110	●
MMSK 22-PI1-S-PNP-HD	0301112	
MMS PI1 programmable magnetic switches with lateral cable outlet		
MMS 22-PI1-S-M8-PNP-SA	0301166	●
MMSK 22-PI1-S-PNP-SA	0301168	

ⓘ Two sensors (closer/S) are required for each unit, plus extension cables as an option. Please note the minimum permitted bending radii for the sensor cables, which are generally 35 mm. Connection cable, cable extensions, and sensor distributors can be found in the table for the MMS 22.

MMS PI2 programmable magnetic switches

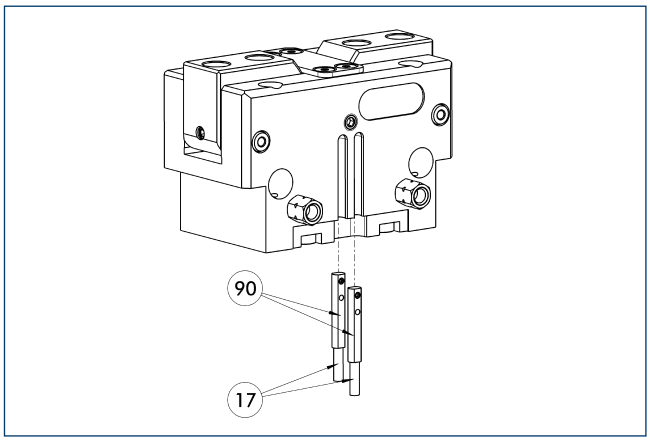

(17) Cable outlet
(90) MMS 22...-PI2-... sensor

Position query with two programmable positions per sensor and electronics integrated in sensor. Programmable via MT magnet teaching tool (included in the scope of delivery) or ST plug teaching tool (optional). Limit position query mounted in C-groove. If the ST plug teaching tools are listed in the table, teaching can only take place with the ST plug teaching tools.

Description	ID	Often combined
MMS PI2 programmable magnetic switches		
MMS 22-PI2-S-M8-PNP	0301180	●
MMSK 22-PI2-S-PNP	0301182	
MMS PI2-HD programmable magnetic switches with stainless steel housing		
MMS 22-PI2-S-M8-PNP-HD	0301130	●
MMSK 22-PI2-S-PNP-HD	0301132	

ⓘ Per unit one sensor (closer/S) is required, optionally a cable extension. Please note the minimum permitted bending radii for the sensor cables, which are generally 35 mm. Connection cable, cable extensions, and sensor distributors can be found in the table for the MMS-P 22.

MMS-P programmable magnetic switches

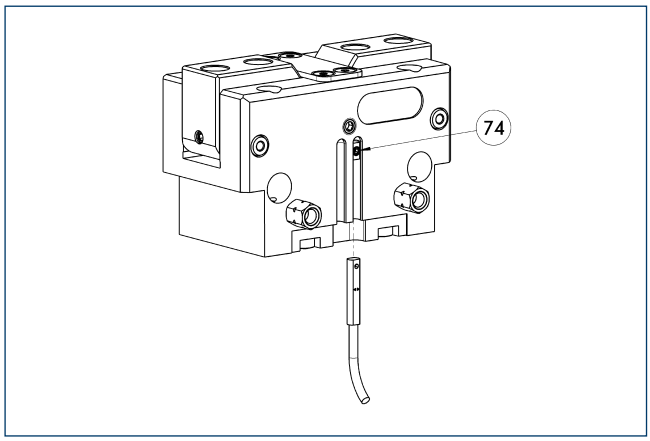

74 Stop for MMS-P

Position monitoring with two programmable positions per sensor. The end position monitoring is mounted in the C-slot.

Description	ID	Often combined
MMS-P programmable magnetic switches		
MMSK-P 22-S-PNP	0301371	
MMS-P 22-S-M8-PNP	0301370	●
Clip for plug / socket		
CLI-M8	0301463	
Connection cables		
KA BG08-L 4P-0500	0307767	●
KA BG08-L 4P-1000	0307768	
KA BW08-L 4P-0500	0307765	
KA BW08-L 4P-1000	0307766	
Sensor distributor		
V2-M8-4P-2XM8-3P	0301380	

ⓘ Per unit one sensor (closer/S) is required, optionally a cable extension. Please note the minimum permitted bending radii for the sensor cables, which are generally 35 mm.

PWG-plus 64

SCHUNK Grippers pneumatic | 2-Finger Angular Grippers | Universal Gripper

Gripping force, O.D. gripping

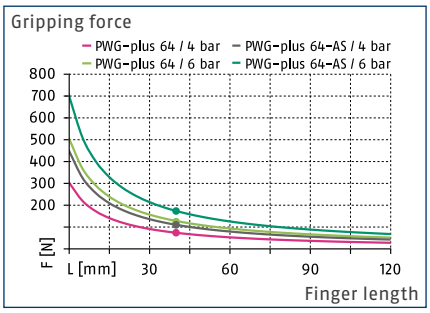

Closing moment curve

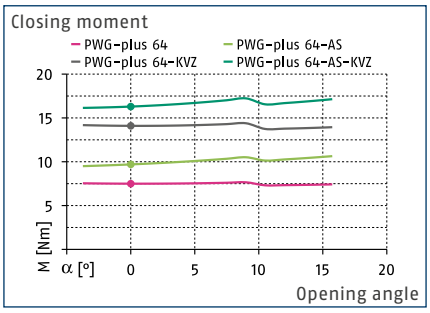

Forces and moments

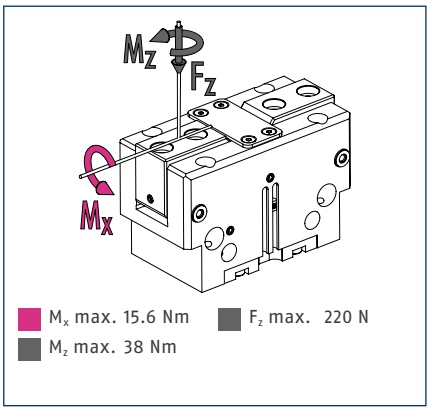

ⓘ The indicated moments and forces are statical values, apply for each base jaw and should not appear simultaneously. If the max. permitted finger weight is exceeded, it is impreative to throttle the air supply so that the jaw movement occurs without any hitting or bouncing. Service life may be reduced.

Technical data

Description		PWG-plus 64	PWG-plus 64-AS
ID		0311620	0311621
Opening angle per jaw	[°]	15	15
Closed angle per jaw up to	[°]	3	3
Closing moment	[Nm]	6.8	9.4
Spring-actuated closing moment	[Nm]		2.6
Weight	[kg]	0.24	0.33
Recommended workpiece weight	[kg]	0.65	0.65
Fluid consumption per double stroke	[cm³]	10	17
min. / max. operating pressure	[bar]	2/8	4/6.5
Nominal operating pressure	[bar]	6	6
Closing- / opening time	[s]	0.07/0.07	0.07/0.13
max. permitted finger length	[mm]	80	80
max. mass moment of inertia per jaw*	[kgcm²]	15	15
IP class		30	30
min. / max. ambient temperature	[°C]	5/90	5/90
Repeat accuracy	[mm]	0.02	0.02
Options and their characteristics			
High-temperature version		39311620	39311621
min. / max. ambient temperature	[°C]	5/130	5/130
Force intensified version		0311625	0311626
Closing moment	[Nm]	13.5	16.1
Spring-actuated closing moment			2.6
Weight	[kg]	0.31	0.39
Maximum pressure	[bar]	6	6
max. permitted finger length	[mm]	80	80

*The unit can be actuated without an external customized throttling at the given value of max. mass moment of inertia per jaw. In case of higher mass moments of inertia, an additional throttling is possible.
The full gripping force according to the data table is only realised after around 100 gripping cycles.

Main view

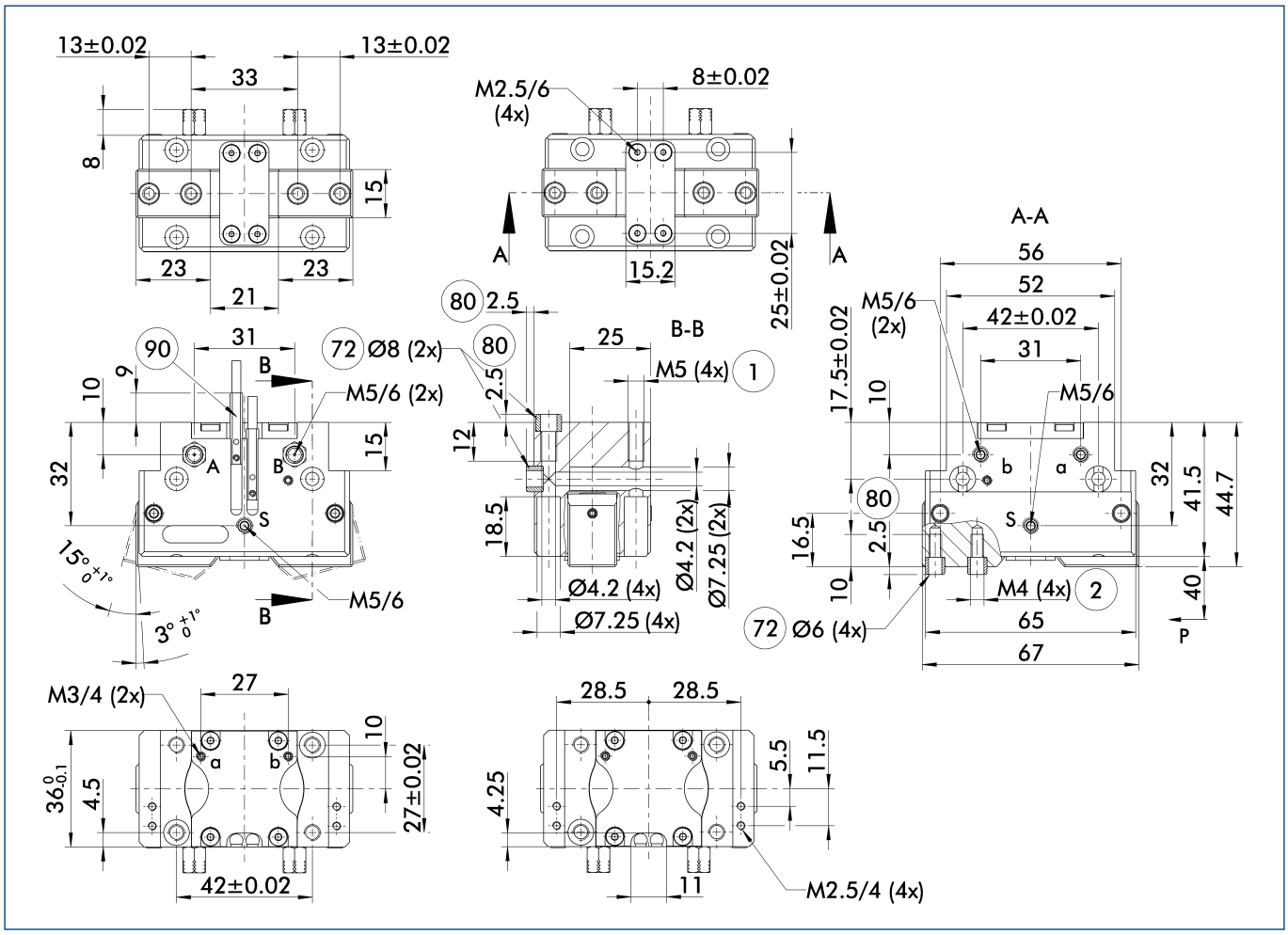

The drawing shows the gripper in the basic version with closed jaws, without dimensional consideration of the options described below.

ⓘ The SDV-P pressure maintenance valve can also be used for I.D. or O.D. gripping alternatively or in addition to the spring-loaded, mechanical gripping force maintenance device (see catalog section on "Accessories").

A, a Main / direct connection, gripper opening

B, b Main / direct connection, gripper closing

S Air purge connection (0.5 ... 1 bar)

1 Gripper connection

2 Finger connection

72 Fit for centering sleeves

80 Depth of the centering sleeve hole in the mating part

90 MMS 22... sensor

Maximum permitted finger projection

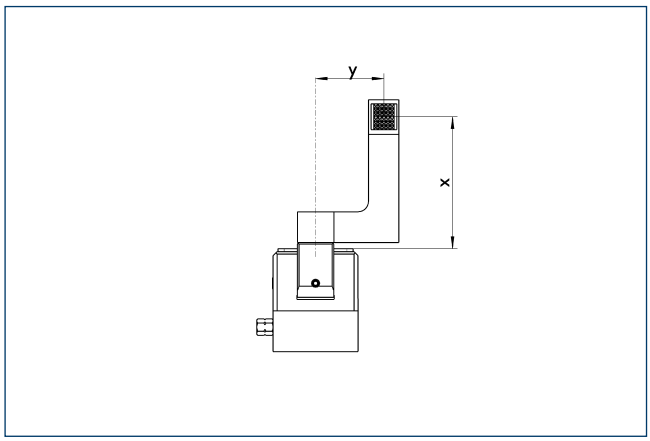

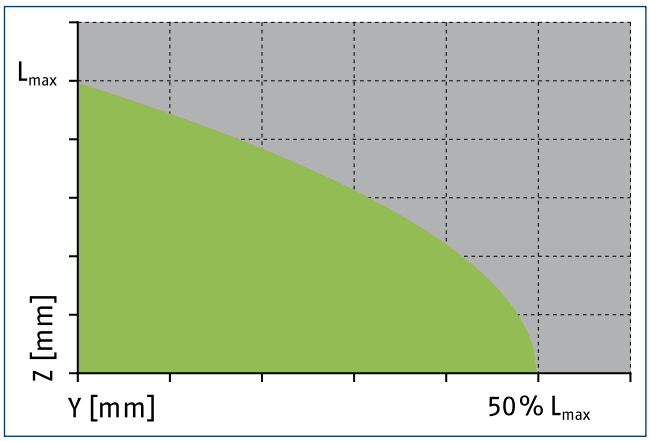

Permitted range

Inadmissible range

L_{max} is equivalent to the maximum permitted finger length, see the chart of technical specifications.

Hose-free direct connection M3

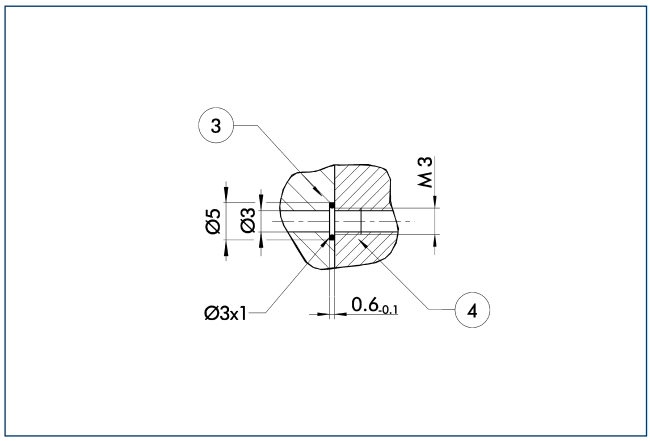

3 Adapter 4 Gripper

The direct connection is used for supplying compressed air without hoses. Instead, the pressure medium is fed through bore-holes in the mounting plate.

Gripping force maintenance device

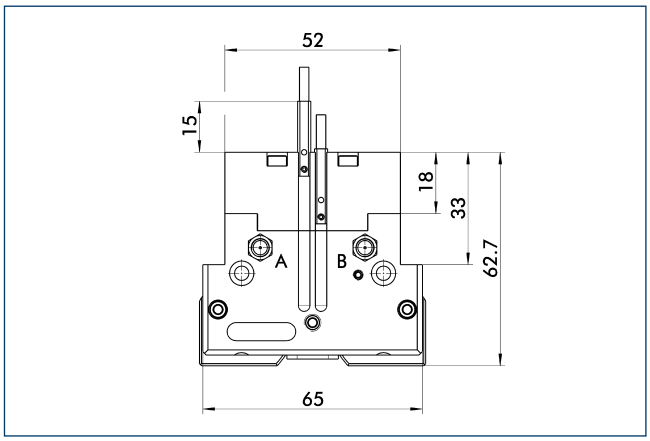

The mechanical gripping force maintenance device ensures a minimum gripping force even in case of pressure drop. This acts as closing force in the AS version. In addition, the gripping force maintenance device can also be used for increasing the gripping force or for single-acting gripping.

Shaft support

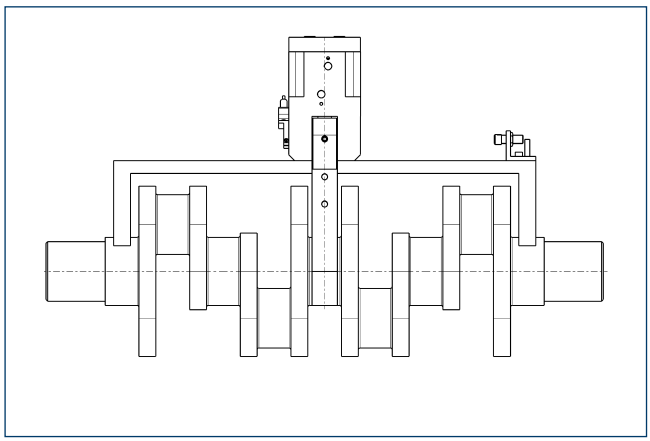

The complete assembly group for handling of crank or cam shaft can be supplied on request.

Force intensified version

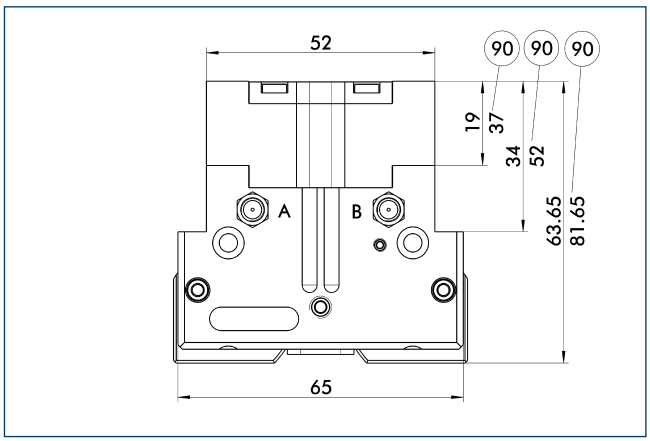

90 For AS version

The KVZ power booster cylinder increases gripping forces for opening and closing. A second piston connected in a series increases the force on the diagonal pull for this purpose. If applicable, observe the additional installation height for combination with an element for maintenance of gripping force.

Mounting kit for opening angle limitation

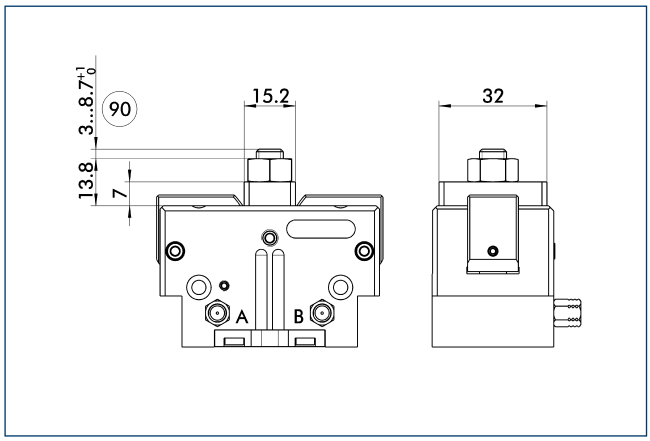

(90) Max. adjustment

Stepless adjustment of the opening angle is possible with a mounting kit.

Description	ID	
Stroke adjustment		
HVE-PWG-plus 64	0311723	

BSWS jaw quick-change systems

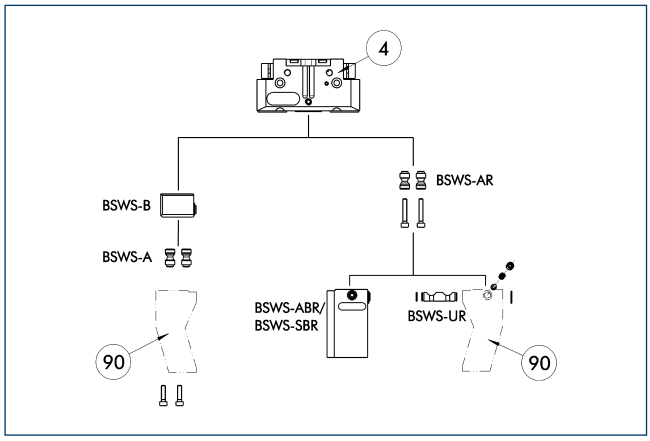

(4) Gripper

(90) Customized gripper fingers

There are various jaw quick-change systems available for the grippers. For detailed information, refer to the appropriate product.

Description	ID	
Jaw quick-change system adapter		
BSWS-AR 64	0300092	
BSWS-A 64	0303022	
Jaw quick-change system base		
BSWS-B 64	0303023	
Finger blanks with jaw quick-change system		
BSWS-ABR-PGZN-plus 64	0300072	
BSWS-SBR-PGZN-plus 64	0300082	
Jaw quick-change system reversed		
BSWS-UR 64	0302991	

ⓘ Only the systems listed in the table can be used.

SDV-P pressure maintenance valve

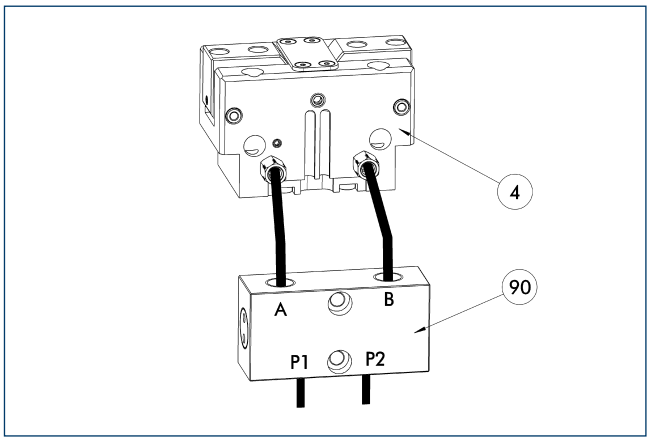

(4) Gripper

(90) SDV-P pressure maintenance valve

The SDV-P pressure maintenance valves ensure that the pressure in the piston chamber of pneumatic gripping, rotary, linear, and quick-change modules is maintained temporarily during an emergency stop.

Description	ID	
Pressure maintenance valve		
SDV-P 04	0403130	

ZBA L-plus 64 intermediate jaws

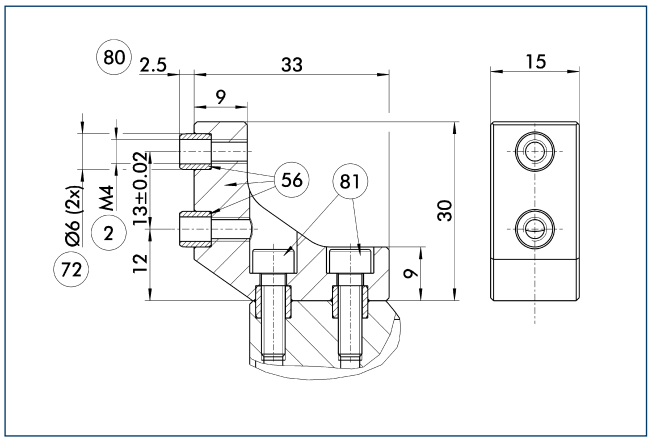

(2) Finger connection
(56) Included in delivery
(72) Fit for centering sleeves
(80) Depth of the centering sleeve hole in the mating part
(81) Not included in the scope of delivery

Optionally intermediate jaws can be used, enabling direct connection and alignment of top jaws and various standard accessories in Z-direction.

Description	ID	Material	Scope of delivery
Intermediate jaws			
ZBA-L-plus 64	0311722	Aluminum	1

FMS-ZBA / ZBP 64 force-measuring jaws

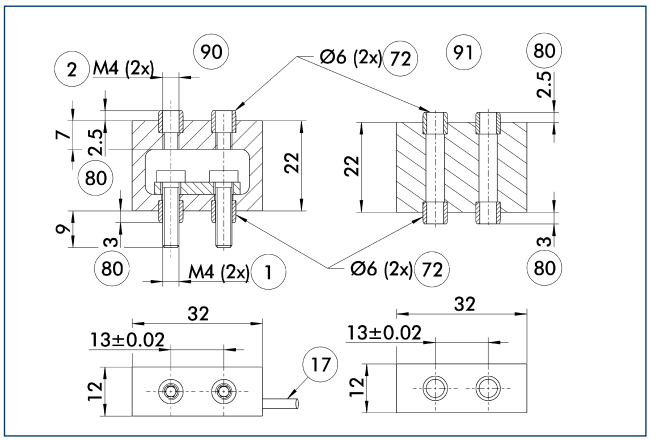

(1) Gripper connection
(2) Finger connection
(17) Cable outlet
(72) Fit for centering sleeves
(80) Depth of the centering sleeve hole in the mating part
(90) Active intermediate jaws
(91) Passive intermediate jaws

Force measuring jaws measure gripping forces, but can also determine workpiece weights or dimensional deviations. There are active and passive intermediate jaws (FMS-ZBA or FMS-ZBP). At least one active force measuring jaw is required per gripper, the rest can be passive. For each active jaw, a FMS-A control unit and a FMS-AK connection cable are required.

Description	ID	Often combined
Active intermediate jaws		
FMS-ZBA 64	0301832	
Passive intermediate jaws		
FMS-ZBP 64	0301833	
Connection cables		
FMS-AK0200	0301820	●
FMS-AK0500	0301821	
FMS-AK1000	0301822	
FMS-AK2000	0301823	
Electronic processor		
FMS-A1	0301810	

ABR- / SBR-PGZN-plus 64 finger blanks

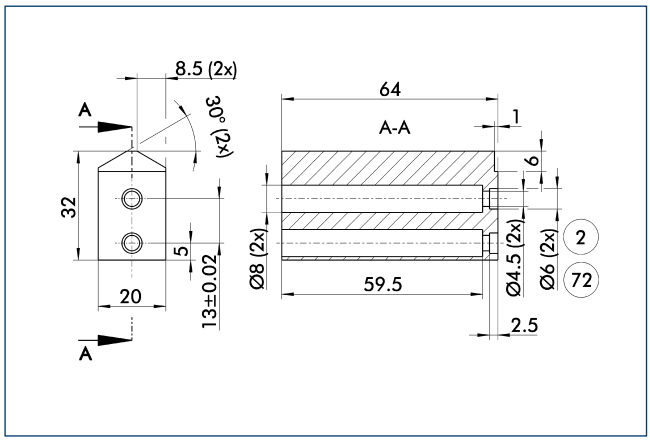

(2) Finger connection
(72) Fit for centering sleeves

Finger blanks for customized subsequent machining.

Description	ID	Material	Scope of delivery
Finger blanks			
ABR-PGZN-plus 64	0300010	Aluminum	1
SBR-PGZN-plus 64	0300020	16MnCr5	1

Attachment valves

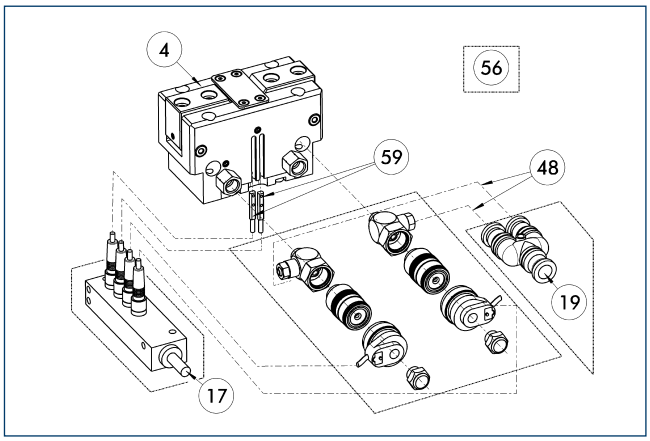

(4) Gripper
(17) Cable outlet
(19) Air connection
(48) Hose
(56) Included in delivery
(59) Monitoring gripping

For each unit one attachment valve ABV is required, optional with distributor for sensors and valves. Attachment valves increase the efficiency, reduce the installation work and air consumption and simplify air supply. For details please refer to the "Accessories" catalog section.

Description	ID	Often combined
Attachment valves		
ABV-MV15-M5	0303323	
ABV-MV15-M5-V2-M8	0303386	
ABV-MV15-M5-V4-M8	0303356	●
ABV-MV15-M5-V8-M8	0303357	

Modular assembly automation

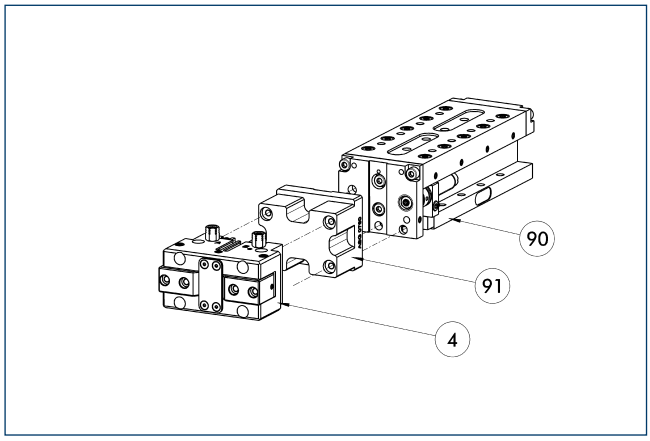

(4) Gripper
(90) CLM / KLM / LM / ELM / ELS / HLM linear module
(91) ASG adapter plate

Gripper and linear modules can be combined with standard adapters out of the modular assembly system. For more information see our catalog "Modular Assembly Automation".

VB-PGN-plus valve box

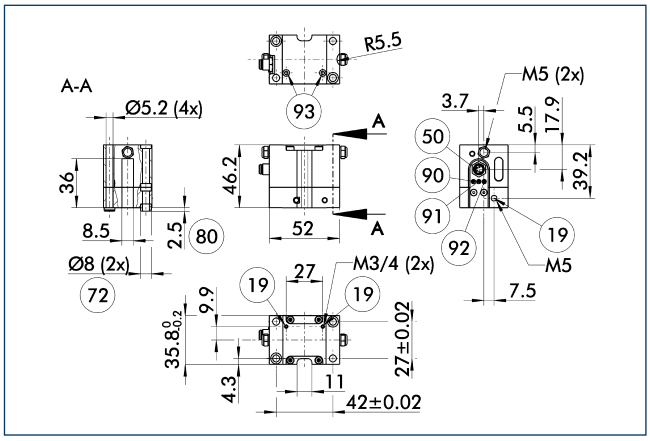

(19) Air connection
(50) Electrical connection
(72) Fit for centering sleeves
(80) Depth of the centering sleeve hole in the mating part
(90) Voltage status indicator
(91) Valve switched b for gripper opened
(92) Valve switched a for gripper opened
(93) Valve connection a and b

Description	ID	
Valve box		
VB-PGN-plus 64	0310092	

Valve box

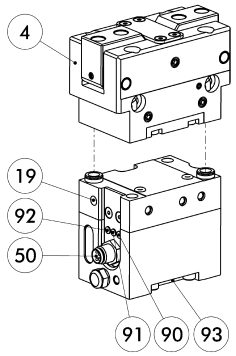

4 Gripper
19 Air connection
50 Electrical connection
90 Power supply
91 Valve switched b for gripper opened
92 Valve switched a for gripper opened
93 Direct connection for hose-free compressed air supply

Ready to install, local control solution! Valves are attached directly to the handling component. As a result, cycle times are significantly reduced and the number of hoses, commissioning times, and air consumption are minimised while maximum process safety is assured.

Description	ID	Often combined
Valve box		
VB-PGN-plus 64	0310092	
Connection cables		
KA BG08-L 4P-0500	0307767	●
KA BG08-L 4P-1000	0307768	
KA BW08-L 4P-0500	0307765	
KA BW08-L 4P-1000	0307766	
KA BG08-L 3P-0300-PNP	0301622	●
KA BG08-L 3P-0500-PNP	0301623	
KA BW08-L 3P-0300-NPN	0301602	
KA BW08-L 3P-0300-PNP	0301594	
KA BW08-L 3P-0500-NPN	9641116	
KA BW08-L 3P-0500-PNP	0301502	
Sensor distributor		
V2-M8-4P-2XM8-3P	0301380	
Cable extensions		
KV BW08-SG08 3P-0030-PNP	0301495	
KV BW08-SG08 3P-0100-PNP	0301496	
KV BW08-SG08 3P-0200-PNP	0301497	●
Clip for plug / socket		
CLI-M8	0301463	

ⓘ Valve and sensor signals of the unit can be merged on a bus distributor so that the electrical as well as the pneumatic connections can be decentralized.

Mounting kit for IN 40 proximity switches

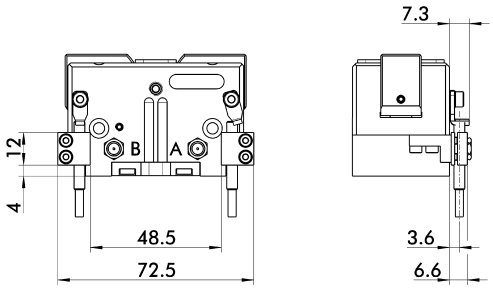

Limit position monitor can be mounted with mounting kit.

Description	ID	
Mounting kit for proximity switch		
AS-IN40-PWG-plus 64	0311720	

ⓘ This mounting kit needs to be ordered optionally as an accessory.

IN 40 inductive proximity switches

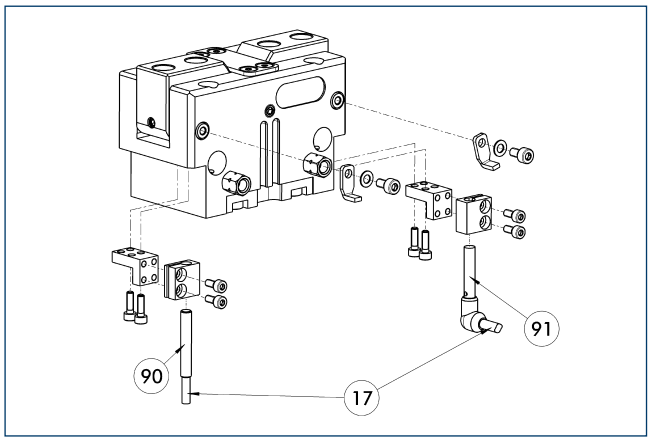

(17) Cable outlet
(90) IN ... sensor
(91) IN ...-SA sensor

Limit position monitor can be mounted with mounting kit.

Description	ID	Often combined
Mounting kit for proximity switch		
AS-IN40-PWG-plus 64	0311720	
Inductive proximity switches		
IN 40-S-M12	0301574	
IN 40-S-M8	0301474	●
INK 40-S	0301555	
Inductive proximity switches with lateral outlet		
IN 40-S-M12-SA	0301577	
IN 40-S-M8-SA	0301473	●
INK 40-S-SA	0301565	
Cable extensions		
KV BG12-SG12 3P-0030-PNP	0301999	
KV BG12-SG12 3P-0060-PNP	0301998	
KV BW08-SG08 3P-0030-PNP	0301495	
KV BW08-SG08 3P-0100-PNP	0301496	
KV BW08-SG08 3P-0200-PNP	0301497	●
KV BW12-SG12 3P-0030-PNP	0301595	
KV BW12-SG12 3P-0100-PNP	0301596	
KV BW12-SG12 3P-0200-PNP	0301597	
Clip for plug / socket		
CLI-M12	0301464	
CLI-M8	0301463	
Connection cables		
KA BG08-L 3P-0300-PNP	0301622	●
KA BG08-L 3P-0500-PNP	0301623	
KA BG12-L 3P-0500-PNP	30016369	
KA BW08-L 3P-0300-PNP	0301594	
KA BW08-L 3P-0500-PNP	0301502	
KA BW12-L 3P-0300-PNP	0301503	
KA BW12-L 3P-0500-PNP	0301507	
Sensor distributor		
V2-M8	0301775	●
V2-M12	0301776	●

ⓘ Two sensors (closer/S) are required for each unit, plus extension cables as an option. This mounting kit needs to be ordered optionally as an accessory. Please note the minimum permitted bending radii for the sensor cables, which are generally 35 mm.

Mounting kit for IN 80 proximity switches

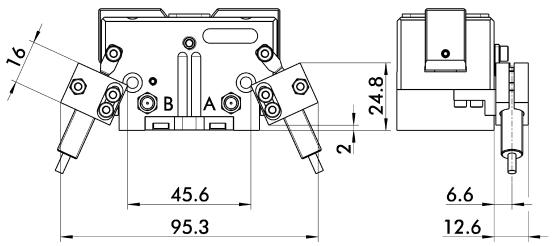

Limit position monitor can be mounted with mounting kit.

Description	ID	
Mounting kit for proximity switch		
AS-IN80-PWG-plus 64	0311721	

ⓘ This mounting kit needs to be ordered optionally as an accessory.

IN 80 inductive proximity switches

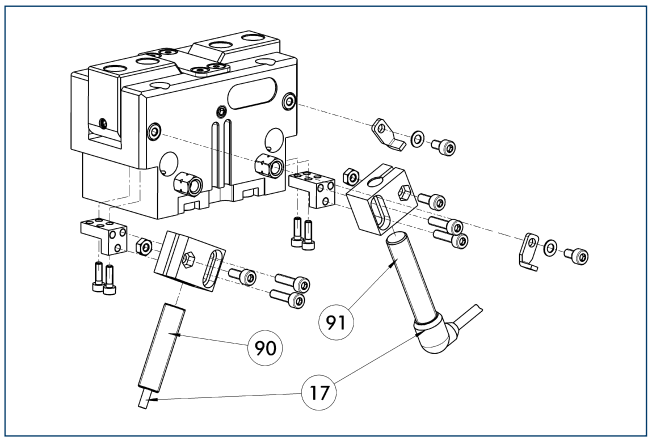

(17) Cable outlet
(91) IN ...-SA sensor
(90) IN ... sensor

Limit position monitor can be mounted with mounting kit.

Description	ID	Often combined
Mounting kit for proximity switch		
AS-IN80-PWG-plus 64	0311721	
Inductive proximity switches		
IN 80-S-M12	0301578	
IN 80-S-M8	0301478	●
IN-C 80-S-M8	0301475	
INK 80-S	0301550	
INK 80-SL	0301579	
Inductive proximity switches with lateral outlet		
IN 80-S-M12-SA	0301587	
IN 80-S-M8-SA	0301483	●
INK 80-S-SA	0301566	
Cable extensions		
KV BG12-SG12 3P-0030-PNP	0301999	
KV BG12-SG12 3P-0060-PNP	0301998	
KV BW08-SG08 3P-0030-PNP	0301495	
KV BW08-SG08 3P-0100-PNP	0301496	
KV BW08-SG08 3P-0200-PNP	0301497	●
KV BW12-SG12 3P-0030-PNP	0301595	
KV BW12-SG12 3P-0100-PNP	0301596	
KV BW12-SG12 3P-0200-PNP	0301597	
Clip for plug / socket		
CLI-M12	0301464	
CLI-M8	0301463	
Connection cables		
KA BG08-L 3P-0300-PNP	0301622	●
KA BG08-L 3P-0500-PNP	0301623	
KA BG12-L 3P-0500-PNP	30016369	
KA BW08-L 3P-0300-PNP	0301594	
KA BW08-L 3P-0500-PNP	0301502	
KA BW12-L 3P-0300-PNP	0301503	
KA BW12-L 3P-0500-PNP	0301507	
Sensor distributor		
V2-M12	0301776	●
V2-M8	0301775	●

ⓘ Two sensors (closer/S) are required for each unit, plus extension cables as an option. This mounting kit needs to be ordered optionally as an accessory. Please note the minimum permitted bending radii for the sensor cables, which are generally 35 mm.

MMS electronic magnetic switches

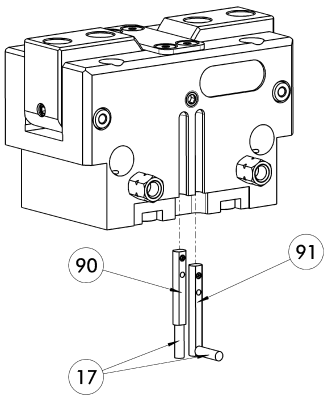

(17) Cable outlet
(91) MMS 22...-SA sensor
(90) MMS 22... sensor

End position monitoring for mounting in the C-slot.

Description	ID	Often combined
MMS electronic magnetic switches		
MMS 22-S-M8-PNP	0301032	●
MMSK 22-S-PNP	0301034	
MMS electronic magnetic switches with lateral cable outlet		
MMS 22-S-M8-PNP-SA	0301042	●
MMSK 22-S-PNP-SA	0301044	
Cable extensions		
KV BW08-SG08 3P-0030-PNP	0301495	
KV BW08-SG08 3P-0100-PNP	0301496	
KV BW08-SG08 3P-0200-PNP	0301497	●
Clip for plug / socket		
CLI-M8	0301463	
Connection cables		
KA BG08-L 3P-0300-PNP	0301622	●
KA BG08-L 3P-0500-PNP	0301623	
KA BW08-L 3P-0300-PNP	0301594	
KA BW08-L 3P-0500-PNP	0301502	
Sensor distributor		
V2-M8	0301775	●
V4-M8	0301746	
V8-M8	0301751	

ⓘ Two sensors (closer/S) are required for each unit, plus extension cables as an option. Please note the minimum permitted bending radii for the sensor cables, which are generally 35 mm.

MMS PI1 programmable magnetic switches

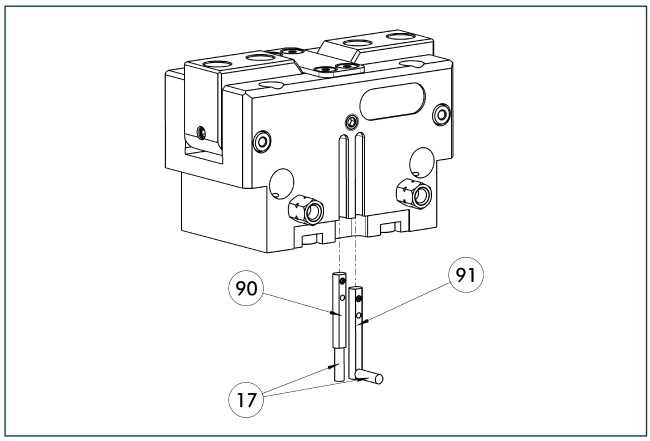

(17) Cable outlet
(91) MMS 22...-PI1-...-SA sensor
(90) MMS 22...-PI1-... sensor

Position query with one programmable position per sensor and electronics integrated in sensor. Programmable via MT magnet teaching tool (included in the scope of delivery) or ST plug teaching tool (optional). Limit position query mounted in C-groove. If the ST plug teaching tools are listed in the table, teaching can only take place with the ST plug teaching tools.

Description	ID	Often combined
MMS PI1 programmable magnetic switches		
MMS 22-PI1-S-M8-PNP	0301160	●
MMSK 22-PI1-S-PNP	0301162	
MMS PI1-HD programmable magnetic switches with stainless steel housing		
MMS 22-PI1-S-M8-PNP-HD	0301110	●
MMSK 22-PI1-S-PNP-HD	0301112	
MMS PI1 programmable magnetic switches with lateral cable outlet		
MMS 22-PI1-S-M8-PNP-SA	0301166	●
MMSK 22-PI1-S-PNP-SA	0301168	

ⓘ Two sensors (closer/S) are required for each unit, plus extension cables as an option. Please note the minimum permitted bending radii for the sensor cables, which are generally 35 mm. Connection cable, cable extensions, and sensor distributors can be found in the table for the MMS 22.

MMS PI2 programmable magnetic switches

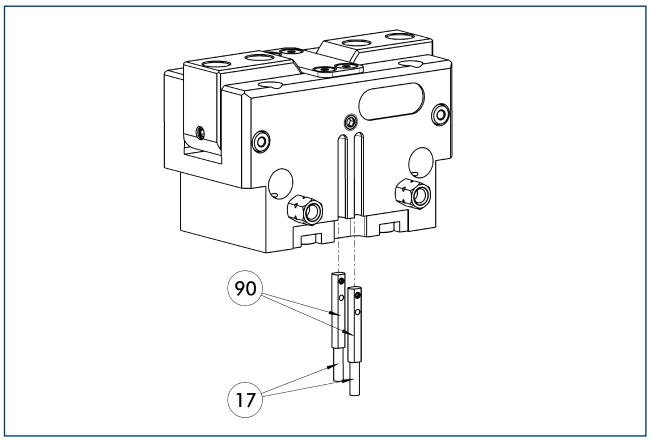

(17) Cable outlet
(90) MMS 22...-PI2-... sensor

Position query with two programmable positions per sensor and electronics integrated in sensor. Programmable via MT magnet teaching tool (included in the scope of delivery) or ST plug teaching tool (optional). Limit position query mounted in C-groove. If the ST plug teaching tools are listed in the table, teaching can only take place with the ST plug teaching tools.

Description	ID	Often combined
MMS PI2 programmable magnetic switches		
MMS 22-PI2-S-M8-PNP	0301180	●
MMSK 22-PI2-S-PNP	0301182	
MMS PI2-HD programmable magnetic switches with stainless steel housing		
MMS 22-PI2-S-M8-PNP-HD	0301130	●
MMSK 22-PI2-S-PNP-HD	0301132	

ⓘ Per unit one sensor (closer/S) is required, optionally a cable extension. Please note the minimum permitted bending radii for the sensor cables, which are generally 35 mm. Connection cable, cable extensions, and sensor distributors can be found in the table for the MMS-P 22.

MMS-P programmable magnetic switches

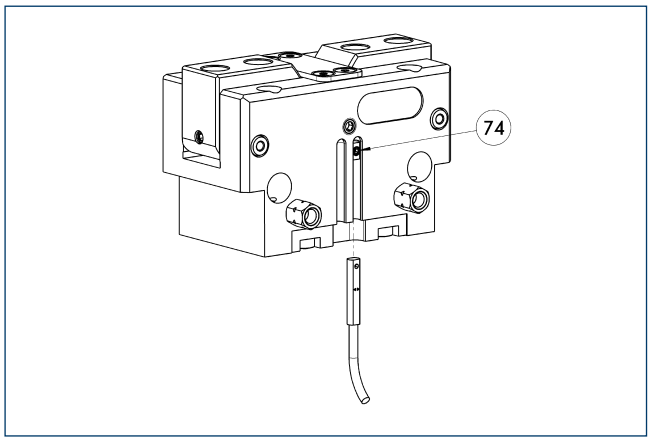

74 Stop for MMS-P

Position monitoring with two programmable positions per sensor. The end position monitoring is mounted in the C-slot.

Description	ID	Often combined
MMS-P programmable magnetic switches		
MMSK-P 22-S-PNP	0301371	
MMS-P 22-S-M8-PNP	0301370	●
Clip for plug / socket		
CLI-M8	0301463	
Connection cables		
KA BG08-L 4P-0500	0307767	●
KA BG08-L 4P-1000	0307768	
KA BW08-L 4P-0500	0307765	
KA BW08-L 4P-1000	0307766	
Sensor distributor		
V2-M8-4P-2XM8-3P	0301380	

ⓘ Per unit one sensor (closer/S) is required, optionally a cable extension. Please note the minimum permitted bending radii for the sensor cables, which are generally 35 mm.

PWG-plus 80

SCHUNK Grippers pneumatic | 2-Finger Angular Grippers | Universal Gripper

Gripping force, O.D. gripping

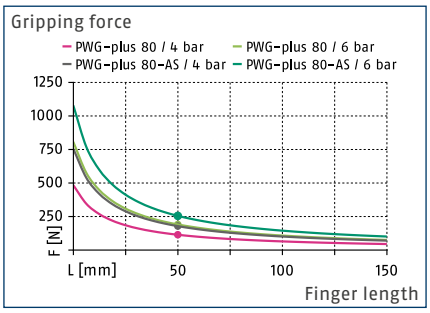

Closing moment curve

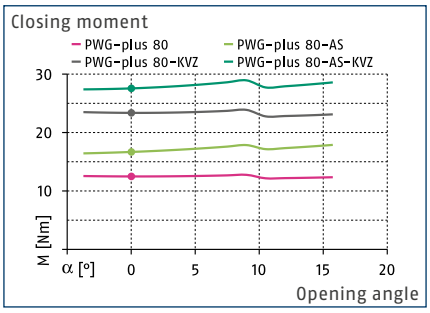

Forces and moments

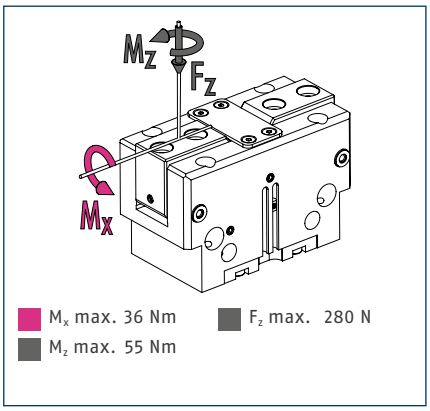

ⓘ The indicated moments and forces are statical values, apply for each base jaw and should not appear simultaneously. If the max. permitted finger weight is exceeded, it is impreative to throttle the air supply so that the jaw movement occurs without any hitting or bouncing. Service life may be reduced.

Technical data

Description		PWG-plus 80	PWG-plus 80-AS
ID		0311630	0311631
Opening angle per jaw	[°]	15	15
Closed angle per jaw up to	[°]	3	3
Closing moment	[Nm]	12.5	16.7
Spring-actuated closing moment	[Nm]		4.2
Weight	[kg]	0.39	0.49
Recommended workpiece weight	[kg]	0.97	0.97
Fluid consumption per double stroke	[cm³]	20	33.5
min. / max. operating pressure	[bar]	2/8	4/6.5
Nominal operating pressure	[bar]	6	6
Closing- / opening time	[s]	0.08/0.08	0.08/0.15
max. permitted finger length	[mm]	100	100
max. mass moment of inertia per jaw*	[kgcm²]	37.3	37.3
IP class		30	30
min. / max. ambient temperature	[°C]	5/90	5/90
Repeat accuracy	[mm]	0.02	0.02
Options and their characteristics			
High-temperature version		39311630	39311631
min. / max. ambient temperature	[°C]	5/130	5/130
Force intensified version		0311635	0311636
Closing moment	[Nm]	23.4	27.6
Spring-actuated closing moment			4.2
Weight	[kg]	0.54	0.64
Maximum pressure	[bar]	6	6
max. permitted finger length	[mm]	100	100

*The unit can be actuated without an external customized throttling at the given value of max. mass moment of inertia per jaw. In case of higher mass moments of inertia, an additional throttling is possible.
The full gripping force according to the data table is only realised after around 100 gripping cycles.

Main view

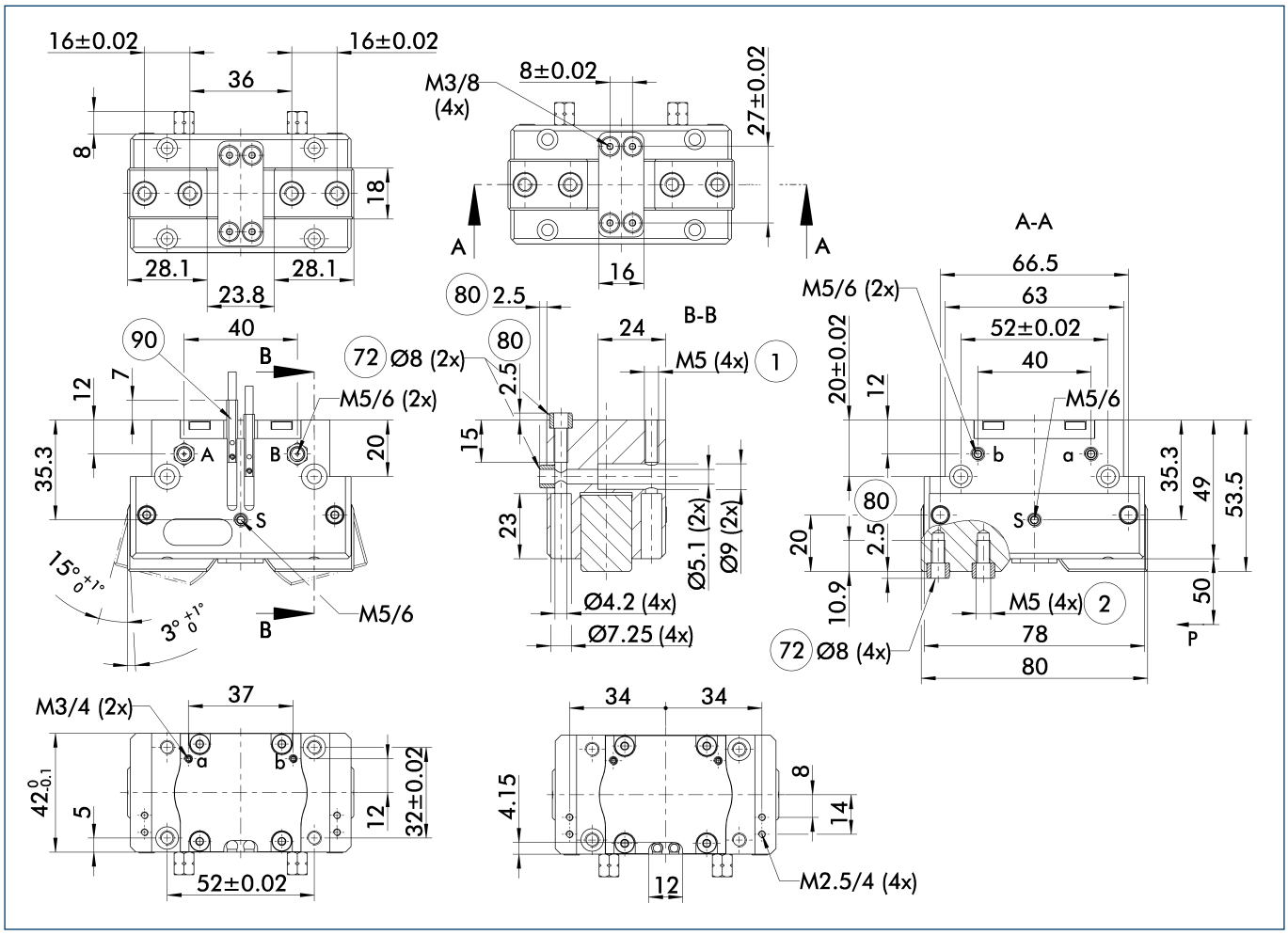

The drawing shows the gripper in the basic version with closed jaws, without dimensional consideration of the options described below.

ⓘ The SDV-P pressure maintenance valve can also be used for I.D. or O.D. gripping alternatively or in addition to the spring-loaded, mechanical gripping force maintenance device (see catalog section on "Accessories").

A, a Main / direct connection, gripper opening

B, b Main / direct connection, gripper closing

S Air purge connection (0.5 ... 1 bar)

(1) Gripper connection

(2) Finger connection

(72) Fit for centering sleeves

(80) Depth of the centering sleeve hole in the mating part

(90) MMS 22... sensor

Maximum permitted finger projection

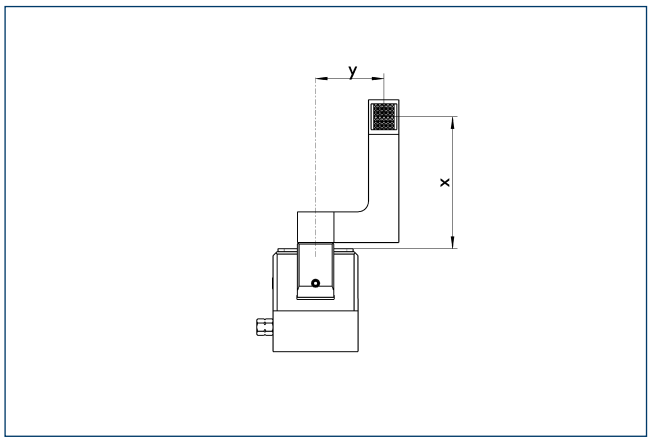

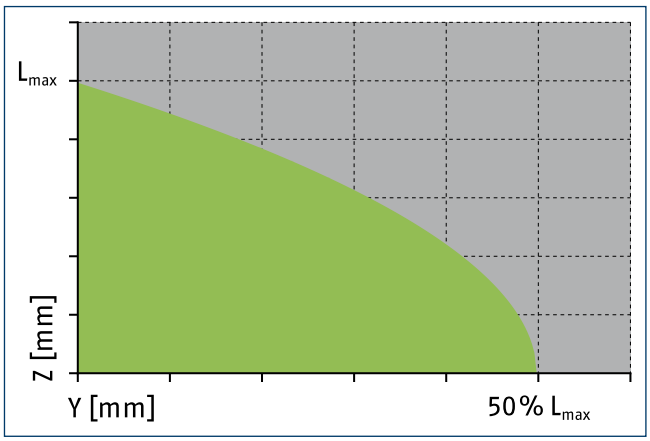

Permitted range

Inadmissible range

L_{max} is equivalent to the maximum permitted finger length, see the chart of technical specifications.

Hose-free direct connection M3

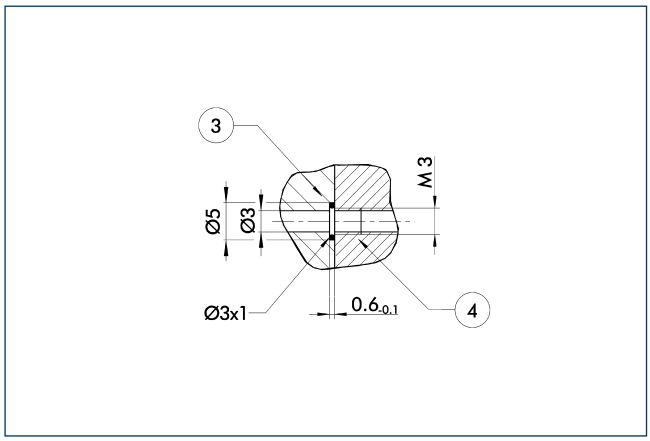

3 Adapter 4 Gripper

The direct connection is used for supplying compressed air without hoses. Instead, the pressure medium is fed through bore-holes in the mounting plate.

Gripping force maintenance device

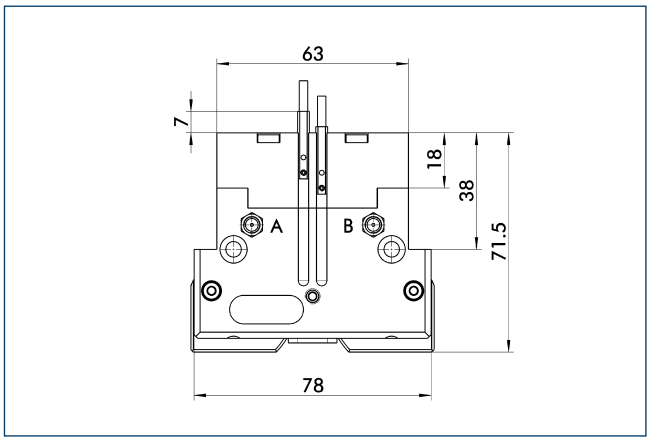

The mechanical gripping force maintenance device ensures a minimum gripping force even in case of pressure drop. This acts as closing force in the AS version. In addition, the gripping force maintenance device can also be used for increasing the gripping force or for single-acting gripping.

Shaft support

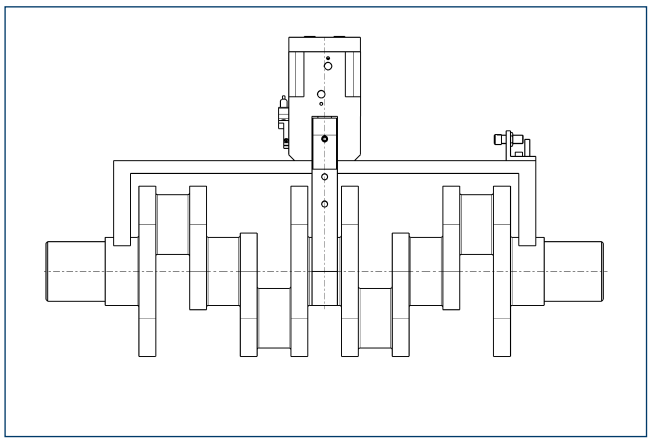

The complete assembly group for handling of crank or cam shaft can be supplied on request.

Force intensified version

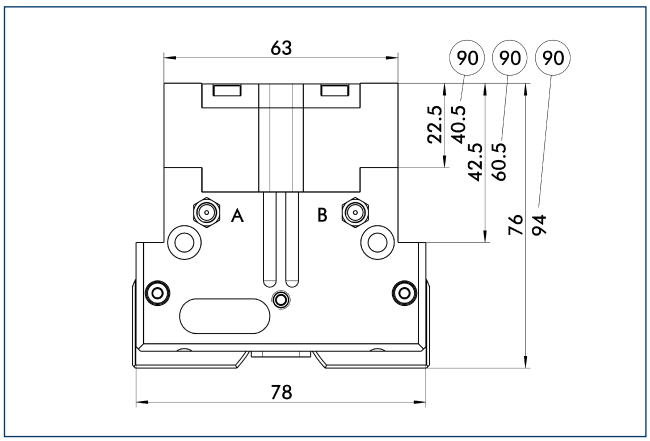

90 For AS version

The KVZ power booster cylinder increases gripping forces for opening and closing. A second piston connected in a series increases the force on the diagonal pull for this purpose. If applicable, observe the additional installation height for combination with an element for maintenance of gripping force.

Mounting kit for opening angle limitation

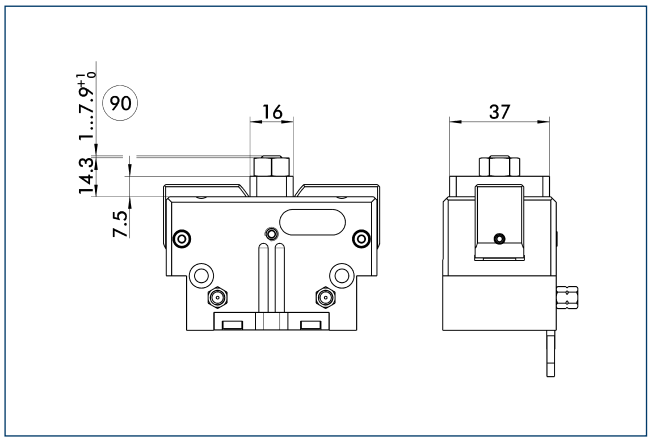

(90) Max. adjustment

Stepless adjustment of the opening angle is possible with a mounting kit.

Description	ID	
Stroke adjustment		
HVE-PWG-plus 80	0311733	

SDV-P pressure maintenance valve

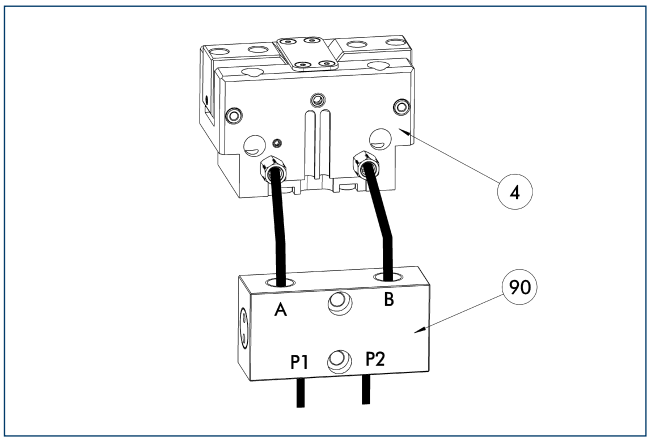

(4) Gripper

(90) SDV-P pressure maintenance valve

The SDV-P pressure maintenance valves ensure that the pressure in the piston chamber of pneumatic gripping, rotary, linear, and quick-change modules is maintained temporarily during an emergency stop.

Description	ID	
Pressure maintenance valve		
SDV-P 04	0403130	

BSWS jaw quick-change systems

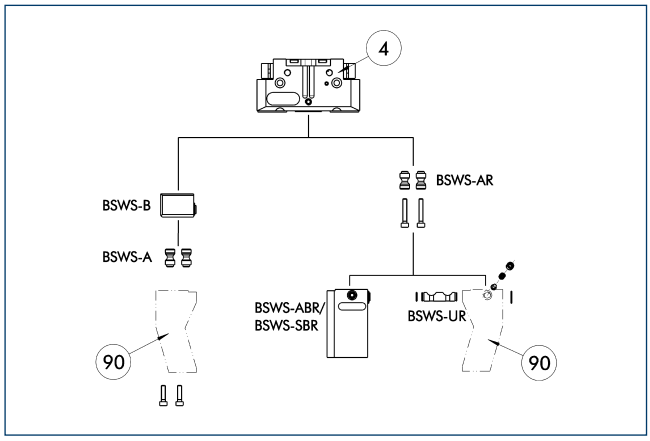

(4) Gripper

(90) Customized gripper fingers

There are various jaw quick-change systems available for the grippers. For detailed information, refer to the appropriate product.

Description	ID	
Jaw quick-change system adapter		
BSWS-AR 80	0300093	
BSWS-A 80	0303024	
Jaw quick-change system base		
BSWS-B 80	0303025	
Finger blanks with jaw quick-change system		
BSWS-ABR-PGZN-plus 80	0300073	
BSWS-SBR-PGZN-plus 80	0300083	
Jaw quick-change system reversed		
BSWS-UR 80	0302992	

ⓘ Only the systems listed in the table can be used.

ZBA L-plus 80 intermediate jaws

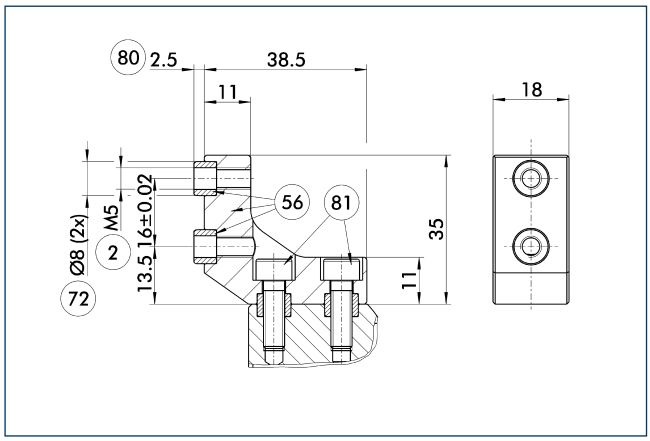

(2) Finger connection
(56) Included in delivery
(72) Fit for centering sleeves
(80) Depth of the centering sleeve hole in the mating part
(81) Not included in the scope of delivery

Optionally intermediate jaws can be used, enabling direct connection and alignment of top jaws and various standard accessories in Z-direction.

Description	ID	Material	Scope of delivery
Intermediate jaws			
ZBA-L-plus 80	0311732	Aluminum	1

FMS-ZBA / ZBP 80 force-measuring jaws

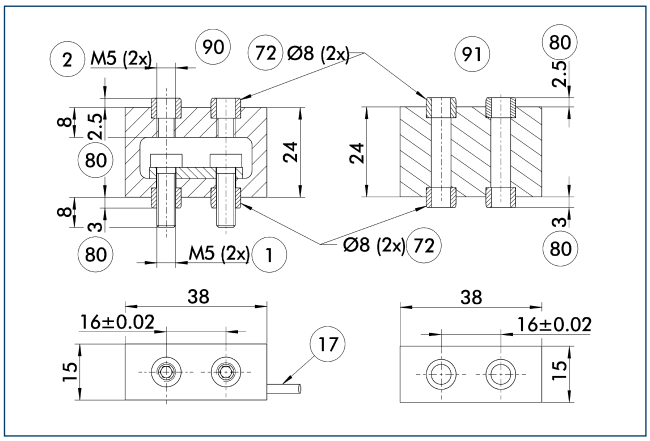

(1) Gripper connection
(2) Finger connection
(17) Cable outlet
(72) Fit for centering sleeves
(80) Depth of the centering sleeve hole in the mating part
(90) Active intermediate jaws
(91) Passive intermediate jaws

Force measuring jaws measure gripping forces, but can also determine workpiece weights or dimensional deviations. There are active and passive intermediate jaws (FMS-ZBA or FMS-ZBP). At least one active force measuring jaw is required per gripper, the rest can be passive. For each active jaw, a FMS-A control unit and a FMS-AK connection cable are required.

Description	ID	Often combined
Active intermediate jaws		
FMS-ZBA 80	0301834	
Passive intermediate jaws		
FMS-ZBP 80	0301835	
Connection cables		
FMS-AK0200	0301820	●
FMS-AK0500	0301821	
FMS-AK1000	0301822	
FMS-AK2000	0301823	
Electronic processor		
FMS-A1	0301810	

ABR- / SBR-PGZN-plus 80 finger blanks

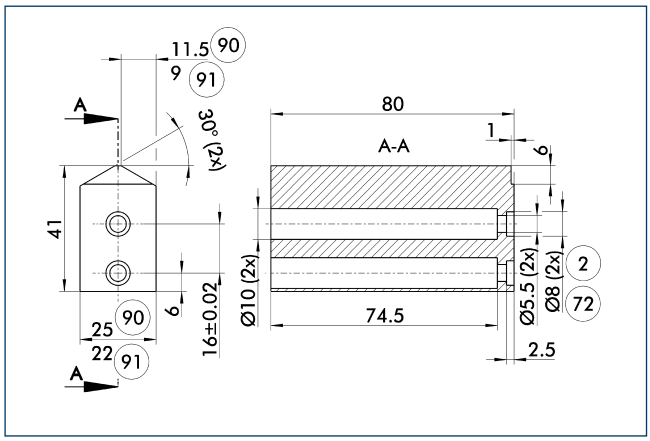

(2) Finger connection
(72) Fit for centering sleeves
(90) ABR-PGZN-plus
(91) SBR-PGZN-plus

Finger blanks for customized subsequent machining.

Description	ID	Material	Scope of delivery
Finger blanks			
ABR-PGZN-plus 80	0300011	Aluminum	1
SBR-PGZN-plus 80	0300021	16MnCr5	1

Attachment valves

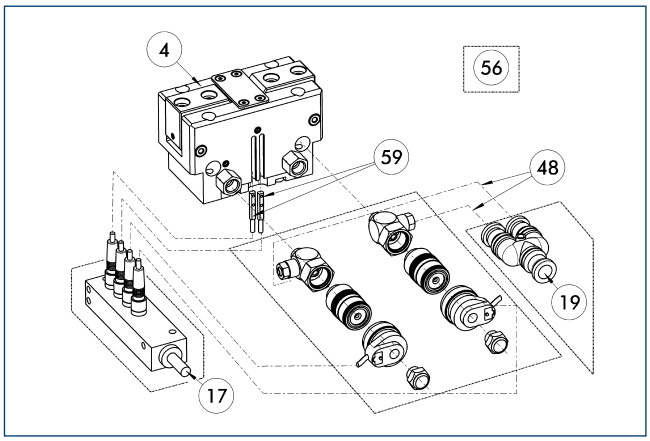

(4) Gripper
(17) Cable outlet
(19) Air connection
(48) Hose
(56) Included in delivery
(59) Monitoring gripping

For each unit one attachment valve ABV is required, optional with distributor for sensors and valves. Attachment valves increase the efficiency, reduce the installation work and air consumption and simplify air supply. For details please refer to the "Accessories" catalog section.

Description	ID	Often combined
Attachment valves		
ABV-MV25-M5	0303326	
ABV-MV25-M5-V2-M8	0303392	
ABV-MV25-M5-V4-M8	0303362	●
ABV-MV25-M5-V8-M8	0303363	

Modular assembly automation

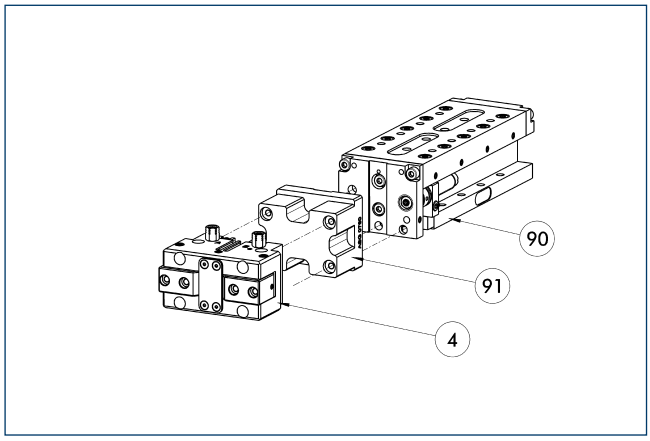

(4) Gripper
(90) CLM / KLM / LM / ELM / ELS / HLM linear module
(91) ASG adapter plate

Gripper and linear modules can be combined with standard adapters out of the modular assembly system. For more information see our catalog "Modular Assembly Automation".

Mounting kit for IN 40 proximity switches

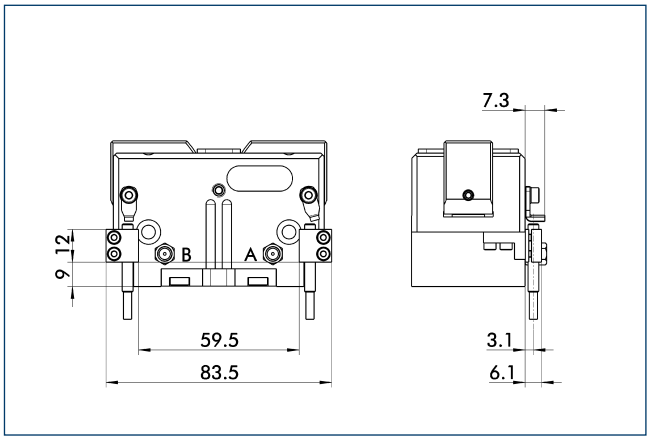

Limit position monitor can be mounted with mounting kit.

Description	ID	
Mounting kit for proximity switch		
AS-IN40-PWG-plus 80	0311730	

ⓘ This mounting kit needs to be ordered optionally as an accessory.

IN 40 inductive proximity switches

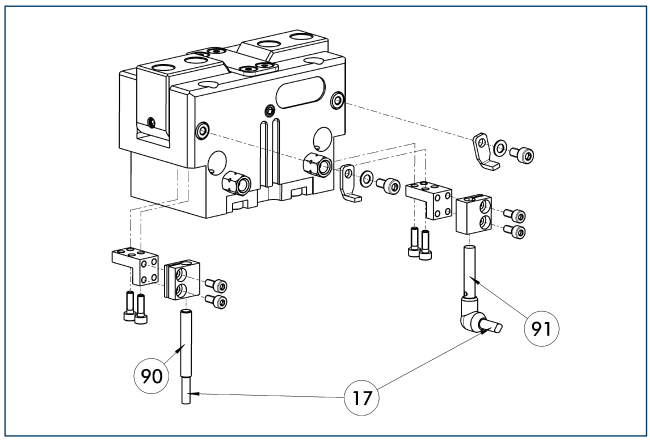

(17) Cable outlet
(91) IN ...-SA sensor
(90) IN ... sensor

Limit position monitor can be mounted with mounting kit.

Description	ID	Often combined
Mounting kit for proximity switch		
AS-IN40-PWG-plus 80	0311730	
Inductive proximity switches		
IN 40-S-M12	0301574	
IN 40-S-M8	0301474	●
INK 40-S	0301555	
Inductive proximity switches with lateral outlet		
IN 40-S-M12-SA	0301577	
IN 40-S-M8-SA	0301473	●
INK 40-S-SA	0301565	
Cable extensions		
KV BG12-SG12 3P-0030-PNP	0301999	
KV BG12-SG12 3P-0060-PNP	0301998	
KV BW08-SG08 3P-0030-PNP	0301495	
KV BW08-SG08 3P-0100-PNP	0301496	
KV BW08-SG08 3P-0200-PNP	0301497	●
KV BW12-SG12 3P-0030-PNP	0301595	
KV BW12-SG12 3P-0100-PNP	0301596	
KV BW12-SG12 3P-0200-PNP	0301597	
Clip for plug / socket		
CLI-M12	0301464	
CLI-M8	0301463	
Connection cables		
KA BG08-L 3P-0300-PNP	0301622	●
KA BG08-L 3P-0500-PNP	0301623	
KA BG12-L 3P-0500-PNP	30016369	
KA BW08-L 3P-0300-PNP	0301594	
KA BW08-L 3P-0500-PNP	0301502	
KA BW12-L 3P-0300-PNP	0301503	
KA BW12-L 3P-0500-PNP	0301507	
Sensor distributor		
V2-M8	0301775	●
V2-M12	0301776	●

ⓘ Two sensors (closer/S) are required for each unit, plus extension cables as an option. This mounting kit needs to be ordered optionally as an accessory. Please note the minimum permitted bending radii for the sensor cables, which are generally 35 mm.

Mounting kit for IN 80 proximity switches

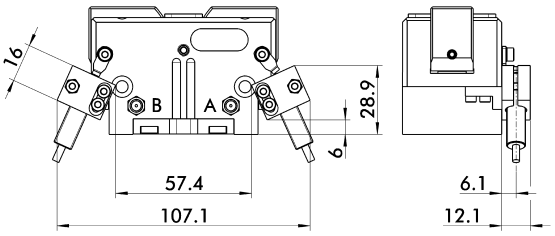

Limit position monitor can be mounted with mounting kit.

Description	ID	
Mounting kit for proximity switch		
AS-IN80-PWG-plus 80	0311731	

ⓘ This mounting kit needs to be ordered optionally as an accessory.

IN 80 inductive proximity switches

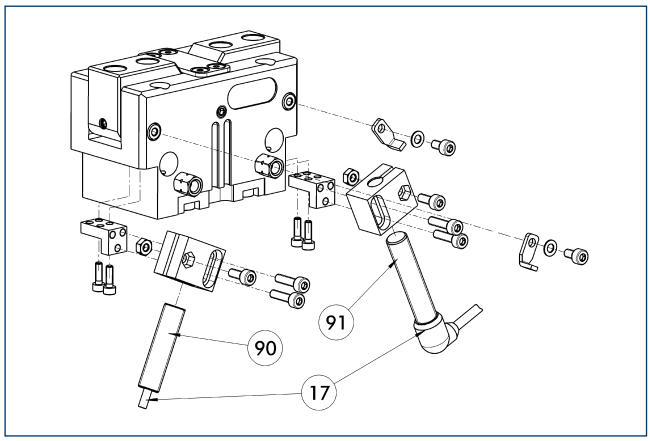

(17) Cable outlet
(91) IN ...-SA sensor
(90) IN ... sensor

Limit position monitor can be mounted with mounting kit.

Description	ID	Often combined
Mounting kit for proximity switch		
AS-IN80-PWG-plus 80	0311731	
Inductive proximity switches		
IN 80-S-M12	0301578	
IN 80-S-M8	0301478	●
IN-C 80-S-M8	0301475	
INK 80-S	0301550	
INK 80-SL	0301579	
Inductive proximity switches with lateral outlet		
IN 80-S-M12-SA	0301587	
IN 80-S-M8-SA	0301483	●
INK 80-S-SA	0301566	
Cable extensions		
KV BG12-SG12 3P-0030-PNP	0301999	
KV BG12-SG12 3P-0060-PNP	0301998	
KV BW08-SG08 3P-0030-PNP	0301495	
KV BW08-SG08 3P-0100-PNP	0301496	
KV BW08-SG08 3P-0200-PNP	0301497	●
KV BW12-SG12 3P-0030-PNP	0301595	
KV BW12-SG12 3P-0100-PNP	0301596	
KV BW12-SG12 3P-0200-PNP	0301597	
Clip for plug / socket		
CLI-M12	0301464	
CLI-M8	0301463	
Connection cables		
KA BG08-L 3P-0300-PNP	0301622	●
KA BG08-L 3P-0500-PNP	0301623	
KA BG12-L 3P-0500-PNP	30016369	
KA BW08-L 3P-0300-PNP	0301594	
KA BW08-L 3P-0500-PNP	0301502	
KA BW12-L 3P-0300-PNP	0301503	
KA BW12-L 3P-0500-PNP	0301507	
Sensor distributor		
V2-M12	0301776	●
V2-M8	0301775	●

ⓘ Two sensors (closer/S) are required for each unit, plus extension cables as an option. This mounting kit needs to be ordered optionally as an accessory. Please note the minimum permitted bending radii for the sensor cables, which are generally 35 mm.

MMS electronic magnetic switches

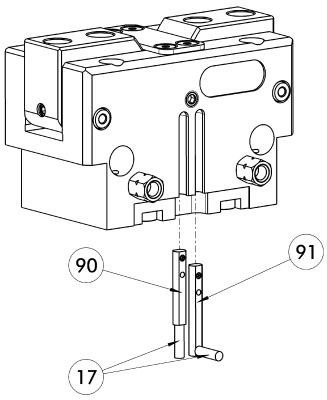

(17) Cable outlet
(91) MMS 22...-SA sensor
(90) MMS 22... sensor

End position monitoring for mounting in the C-slot.

Description	ID	Often combined
MMS electronic magnetic switches		
MMS 22-S-M8-PNP	0301032	●
MMSK 22-S-PNP	0301034	
MMS electronic magnetic switches with lateral cable outlet		
MMS 22-S-M8-PNP-SA	0301042	●
MMSK 22-S-PNP-SA	0301044	
Cable extensions		
KV BW08-SG08 3P-0030-PNP	0301495	
KV BW08-SG08 3P-0100-PNP	0301496	
KV BW08-SG08 3P-0200-PNP	0301497	●
Clip for plug / socket		
CLI-M8	0301463	
Connection cables		
KA BG08-L 3P-0300-PNP	0301622	●
KA BG08-L 3P-0500-PNP	0301623	
KA BW08-L 3P-0300-PNP	0301594	
KA BW08-L 3P-0500-PNP	0301502	
Sensor distributor		
V2-M8	0301775	●
V4-M8	0301746	
V8-M8	0301751	

ⓘ Two sensors (closer/S) are required for each unit, plus extension cables as an option. Please note the minimum permitted bending radii for the sensor cables, which are generally 35 mm.

MMS PI1 programmable magnetic switches

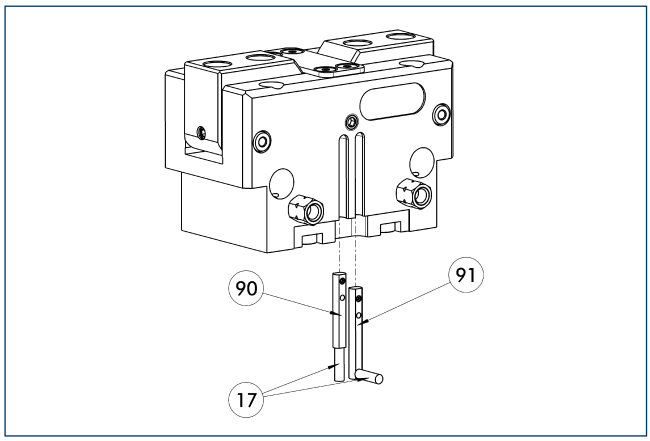

(17) Cable outlet
(91) MMS 22...-PI1-...-SA sensor
(90) MMS 22...-PI1-... sensor

Position query with one programmable position per sensor and electronics integrated in sensor. Programmable via MT magnet teaching tool (included in the scope of delivery) or ST plug teaching tool (optional). Limit position query mounted in C-groove. If the ST plug teaching tools are listed in the table, teaching can only take place with the ST plug teaching tools.

Description	ID	Often combined
MMS PI1 programmable magnetic switches		
MMS 22-PI1-S-M8-PNP	0301160	●
MMSK 22-PI1-S-PNP	0301162	
MMS PI1-HD programmable magnetic switches with stainless steel housing		
MMS 22-PI1-S-M8-PNP-HD	0301110	●
MMSK 22-PI1-S-PNP-HD	0301112	
MMS PI1 programmable magnetic switches with lateral cable outlet		
MMS 22-PI1-S-M8-PNP-SA	0301166	●
MMSK 22-PI1-S-PNP-SA	0301168	

ⓘ Two sensors (closer/S) are required for each unit, plus extension cables as an option. Please note the minimum permitted bending radii for the sensor cables, which are generally 35 mm. Connection cable, cable extensions, and sensor distributors can be found in the table for the MMS 22.

MMS PI2 programmable magnetic switches

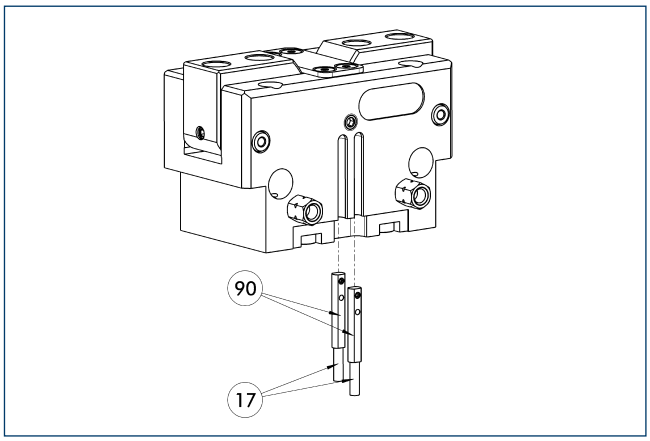

(17) Cable outlet
(90) MMS 22...-PI2-... sensor

Position query with two programmable positions per sensor and electronics integrated in sensor. Programmable via MT magnet teaching tool (included in the scope of delivery) or ST plug teaching tool (optional). Limit position query mounted in C-groove. If the ST plug teaching tools are listed in the table, teaching can only take place with the ST plug teaching tools.

Description	ID	Often combined
MMS PI2 programmable magnetic switches		
MMS 22-PI2-S-M8-PNP	0301180	●
MMSK 22-PI2-S-PNP	0301182	
MMS PI2-HD programmable magnetic switches with stainless steel housing		
MMS 22-PI2-S-M8-PNP-HD	0301130	●
MMSK 22-PI2-S-PNP-HD	0301132	

ⓘ Per unit one sensor (closer/S) is required, optionally a cable extension. Please note the minimum permitted bending radii for the sensor cables, which are generally 35 mm. Connection cable, cable extensions, and sensor distributors can be found in the table for the MMS-P 22.

MMS-P programmable magnetic switches

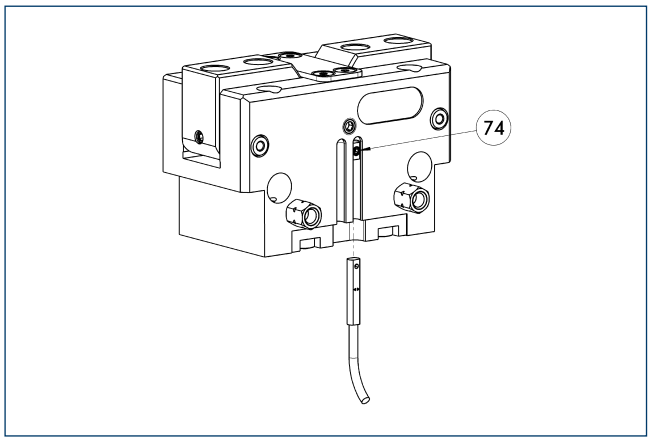

74 Stop for MMS-P

Position monitoring with two programmable positions per sensor. The end position monitoring is mounted in the C-slot.

Description	ID	Often combined
MMS-P programmable magnetic switches		
MMSK-P 22-S-PNP	0301371	
MMS-P 22-S-M8-PNP	0301370	●
Clip for plug / socket		
CLI-M8	0301463	
Connection cables		
KA BG08-L 4P-0500	0307767	●
KA BG08-L 4P-1000	0307768	
KA BW08-L 4P-0500	0307765	
KA BW08-L 4P-1000	0307766	
Sensor distributor		
V2-M8-4P-2XM8-3P	0301380	

ⓘ Per unit one sensor (closer/S) is required, optionally a cable extension. Please note the minimum permitted bending radii for the sensor cables, which are generally 35 mm.

PWG-plus 100

SCHUNK Grippers pneumatic | 2-Finger Angular Grippers | Universal Gripper

Gripping force, O.D. gripping

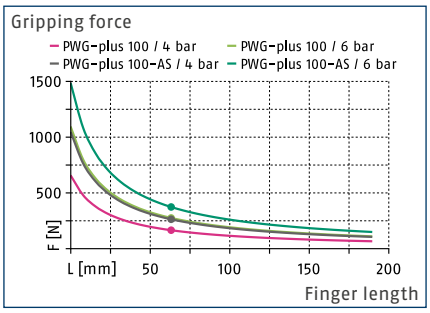

Closing moment curve

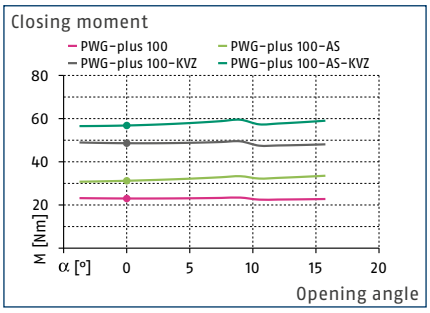

Forces and moments

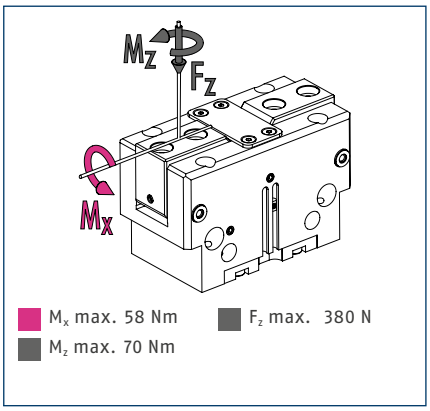

ⓘ The indicated moments and forces are statical values, apply for each base jaw and should not appear simultaneously. If the max. permitted finger weight is exceeded, it is impreative to throttle the air supply so that the jaw movement occurs without any hitting or bouncing. Service life may be reduced.

Technical data

Description		PWG-plus 100	PWG-plus 100-AS
ID		0311640	0311641
Opening angle per jaw	[°]	15	15
Closed angle per jaw up to	[°]	3	3
Closing moment	[Nm]	23	31.2
Spring-actuated closing moment	[Nm]		8.2
Weight	[kg]	0.76	0.95
Recommended workpiece weight	[kg]	1.4	1.4
Fluid consumption per double stroke	[cm³]	40.5	74
min. / max. operating pressure	[bar]	2/8	4/6.5
Nominal operating pressure	[bar]	6	6
Closing- / opening time	[s]	0.12/0.12	0.12/0.18
max. permitted finger length	[mm]	125	125
max. mass moment of inertia per jaw*	[kgcm²]	74.7	74.7
IP class		30	30
min. / max. ambient temperature	[°C]	5/90	5/90
Repeat accuracy	[mm]	0.02	0.02
Options and their characteristics			
High-temperature version		39311640	39311641
min. / max. ambient temperature	[°C]	5/130	5/130
Force intensified version		0311645	0311646
Closing moment	[Nm]	48.6	56.8
Spring-actuated closing moment			8.2
Weight	[kg]	1	1.25
Maximum pressure	[bar]	6	6
max. permitted finger length	[mm]	125	125

*The unit can be actuated without an external customized throttling at the given value of max. mass moment of inertia per jaw. In case of higher mass moments of inertia, an additional throttling is possible.
The full gripping force according to the data table is only realised after around 100 gripping cycles.

Main view

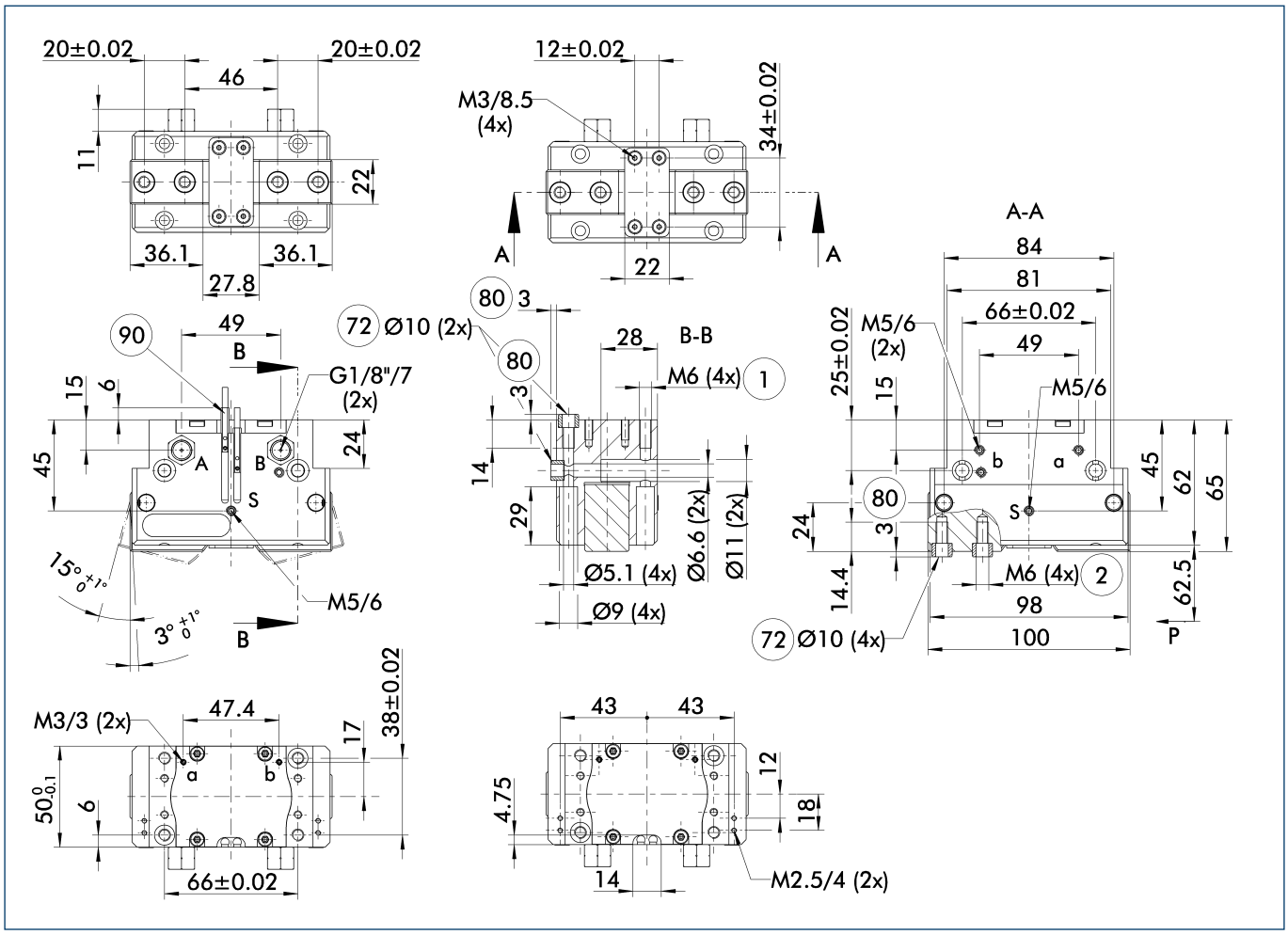

The drawing shows the gripper in the basic version with closed jaws, without dimensional consideration of the options described below.

ⓘ The SDV-P pressure maintenance valve can also be used for I.D. or O.D. gripping alternatively or in addition to the spring-loaded, mechanical gripping force maintenance device (see catalog section on "Accessories").

A, a Main / direct connection, gripper opening

B, b Main / direct connection, gripper closing

S Air purge connection (0.5 ... 1 bar)

1 Gripper connection

2 Finger connection

72 Fit for centering sleeves

80 Depth of the centering sleeve hole in the mating part

90 MMS 22... sensor

Maximum permitted finger projection

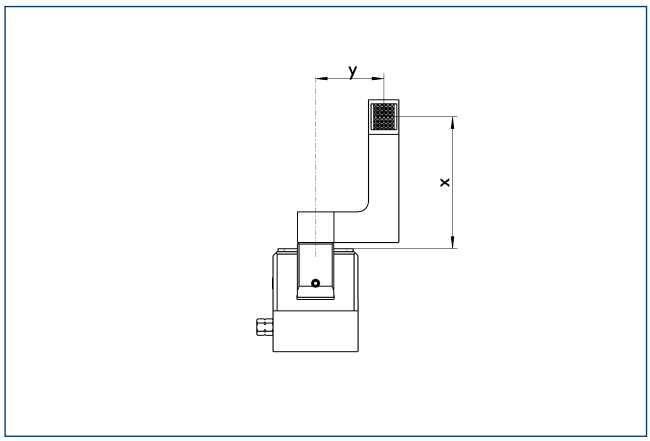

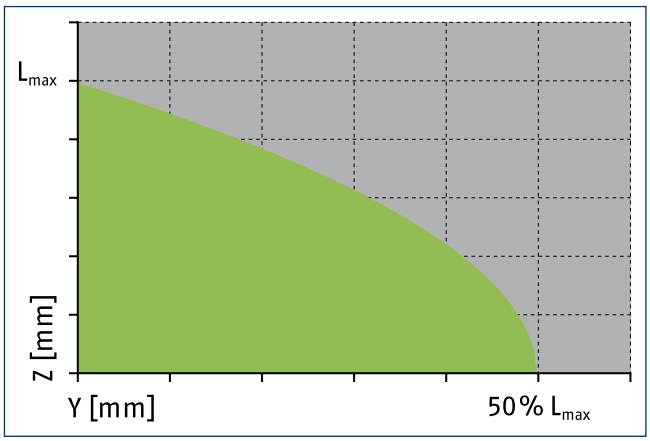

Permitted range

Inadmissible range

L_{max} is equivalent to the maximum permitted finger length, see the chart of technical specifications.

Hose-free direct connection M3

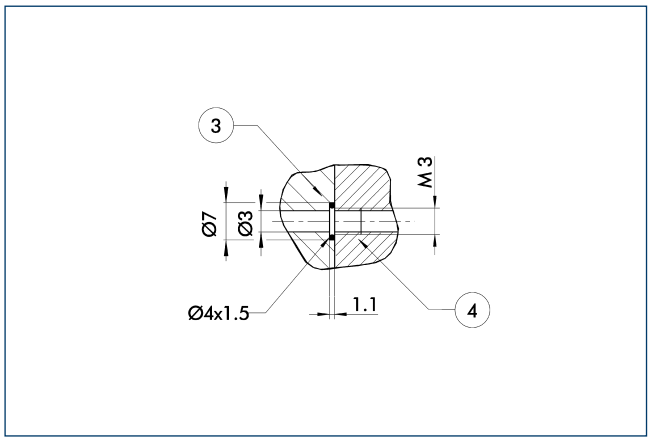

3 Adapter 4 Gripper

The direct connection is used for supplying compressed air without hoses. Instead, the pressure medium is fed through bore-holes in the mounting plate.

Gripping force maintenance device

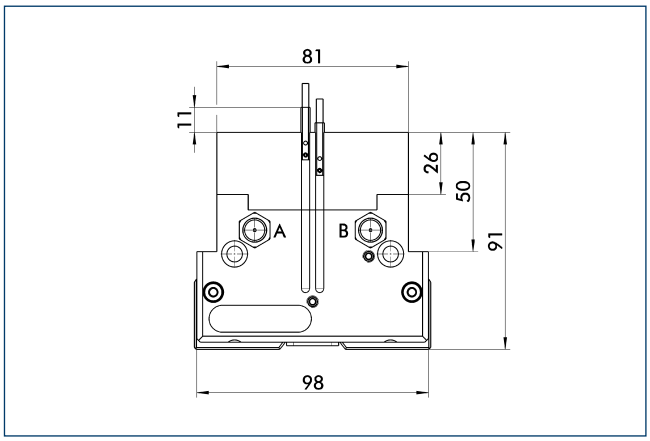

The mechanical gripping force maintenance device ensures a minimum gripping force even in case of pressure drop. This acts as closing force in the AS version. In addition, the gripping force maintenance device can also be used for increasing the gripping force or for single-acting gripping.

Shaft support

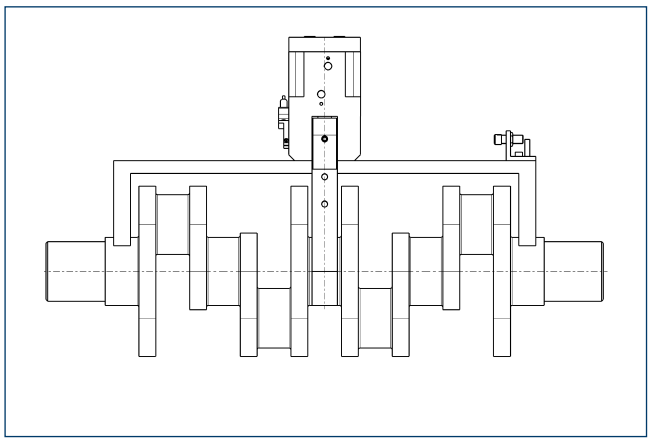

The complete assembly group for handling of crank or cam shaft can be supplied on request.

Force intensified version

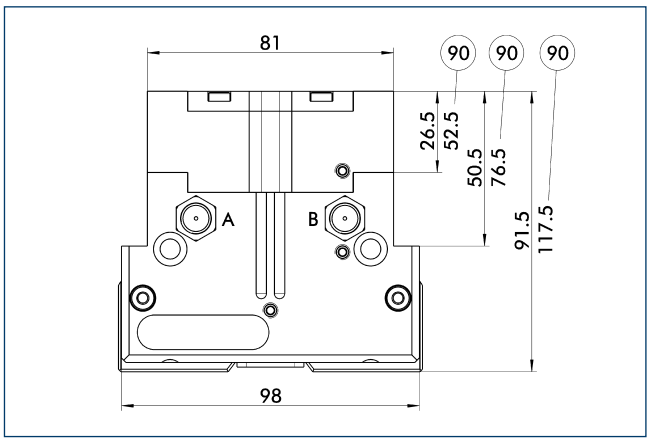

90 For AS version

The KVZ power booster cylinder increases gripping forces for opening and closing. A second piston connected in a series increases the force on the diagonal pull for this purpose. If applicable, observe the additional installation height for combination with an element for maintenance of gripping force.

Mounting kit for opening angle limitation

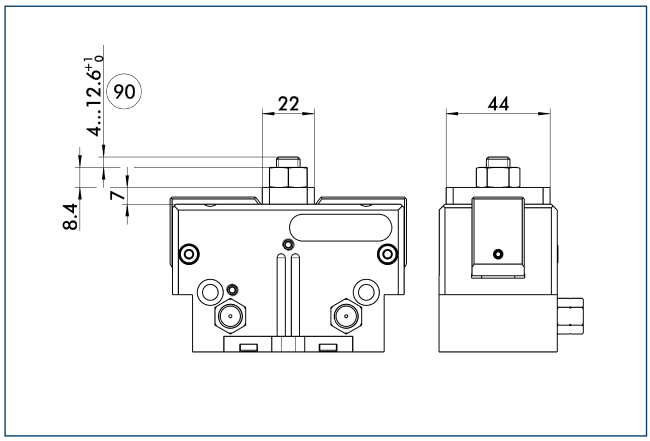

(90) Max. adjustment

Stepless adjustment of the opening angle is possible with a mounting kit.

Description	ID	
Stroke adjustment		
HVE-PWG-plus 100	0311743	

BSWS jaw quick-change systems

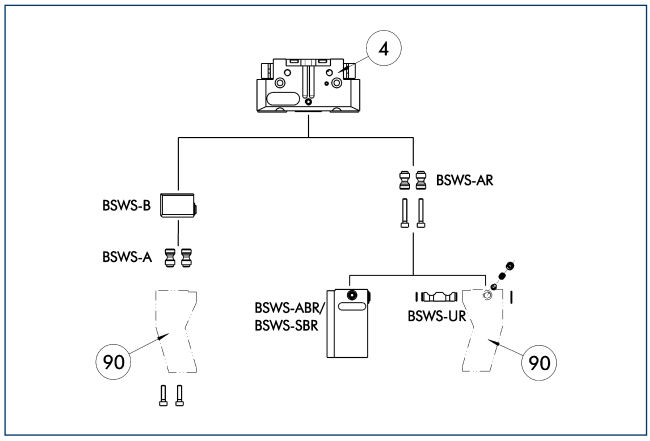

(4) Gripper

(90) Customized gripper fingers

There are various jaw quick-change systems available for the grippers. For detailed information, refer to the appropriate product.

Description	ID	
Jaw quick-change system adapter		
BSWS-AR 100	0300094	
BSWS-A 100	0303026	
Jaw quick-change system base		
BSWS-B 100	0303027	
Finger blanks with jaw quick-change system		
BSWS-ABR-PGZN-plus 100	0300074	
BSWS-SBR-PGZN-plus 100	0300084	
Jaw quick-change system reversed		
BSWS-UR 100	0302993	

ⓘ Only the systems listed in the table can be used.

SDV-P pressure maintenance valve

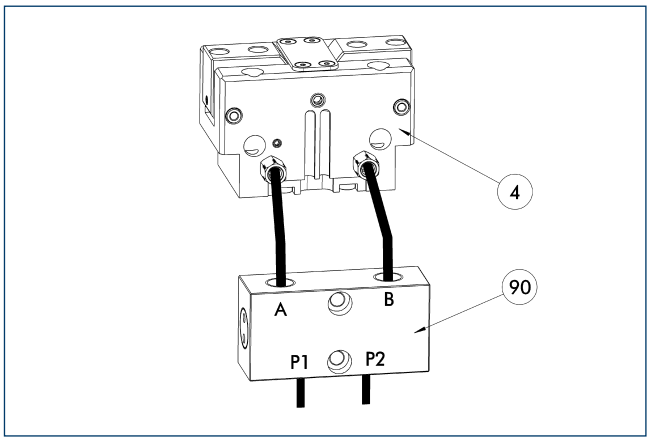

(4) Gripper

(90) SDV-P pressure maintenance valve

The SDV-P pressure maintenance valves ensure that the pressure in the piston chamber of pneumatic gripping, rotary, linear, and quick-change modules is maintained temporarily during an emergency stop.

Description	ID	
Pressure maintenance valve		
SDV-P 04	0403130	

ZBA L-plus 100 intermediate jaws

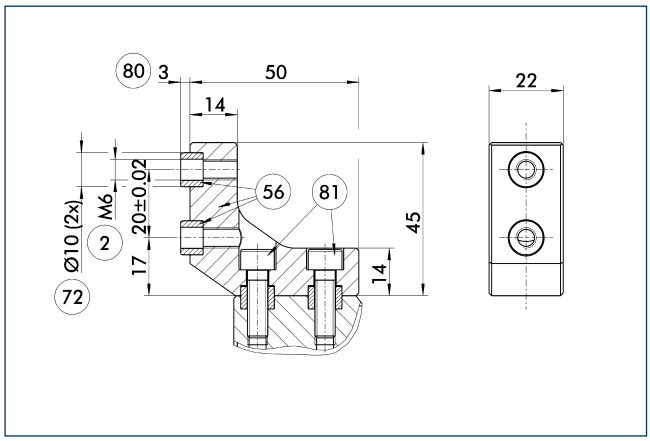

(2) Finger connection
(56) Included in delivery
(72) Fit for centering sleeves
(80) Depth of the centering sleeve hole in the mating part
(81) Not included in the scope of delivery

Optionally intermediate jaws can be used, enabling direct connection and alignment of top jaws and various standard accessories in Z-direction.

Description	ID	Material	Scope of delivery
Intermediate jaws			
ZBA-L-plus 100	0311742	Aluminum	1

FMS-ZBA / ZBP 100 force-measuring jaws

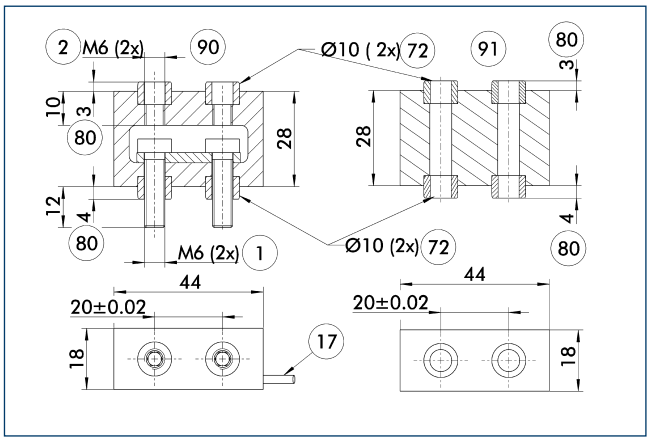

(1) Gripper connection
(2) Finger connection
(17) Cable outlet
(72) Fit for centering sleeves
(80) Depth of the centering sleeve hole in the mating part
(90) Active intermediate jaws
(91) Passive intermediate jaws

Force measuring jaws measure gripping forces, but can also determine workpiece weights or dimensional deviations. There are active and passive intermediate jaws (FMS-ZBA or FMS-ZBP). At least one active force measuring jaw is required per gripper, the rest can be passive. For each active jaw, a FMS-A control unit and a FMS-AK connection cable are required.

Description	ID	Often combined
Active intermediate jaws		
FMS-ZBA 100	0301836	
Passive intermediate jaws		
FMS-ZBP 100	0301837	
Connection cables		
FMS-AK0200	0301820	●
FMS-AK0500	0301821	
FMS-AK1000	0301822	
FMS-AK2000	0301823	
Electronic processor		
FMS-A1	0301810	

ABR- / SBR-PGZN-plus 100 finger blanks

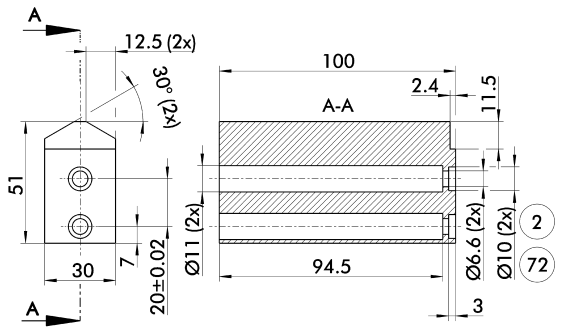

(2) Finger connection
(72) Fit for centering sleeves

Finger blanks for customized subsequent machining.

Description	ID	Material	Scope of delivery
Finger blanks			
ABR-PGZN-plus 100	0300012	Aluminum	1
SBR-PGZN-plus 100	0300022	16MnCr5	1

Attachment valves

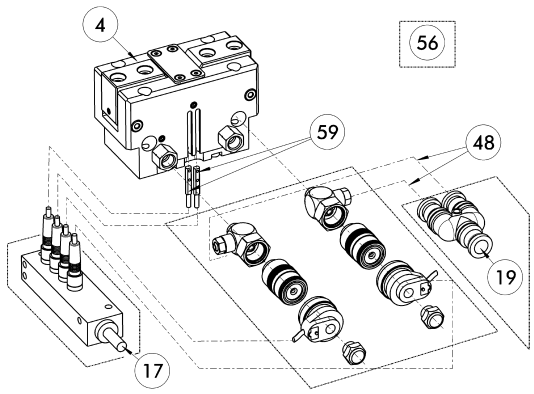

(4) Gripper
(17) Cable outlet
(19) Air connection
(48) Hose
(56) Included in delivery
(59) Monitoring gripping

For each unit one attachment valve ABV is required, optional with distributor for sensors and valves. Attachment valves increase the efficiency, reduce the installation work and air consumption and simplify air supply. For details please refer to the "Accessories" catalog section.

Description	ID	Often combined
Attachment valves		
ABV-MV30-G1/8	0303328	
ABV-MV30-G1/8-V2-M8	0303396	
ABV-MV30-G1/8-V4-M8	0303366	●
ABV-MV30-G1/8-V8-M8	0303367	

Modular assembly automation

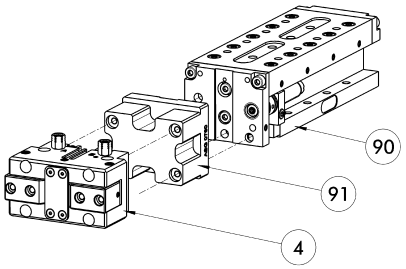

(4) Gripper
(90) CLM / KLM / LM / ELM / ELS / HLM linear module
(91) ASG adapter plate

Gripper and linear modules can be combined with standard adapters out of the modular assembly system. For more information see our catalog "Modular Assembly Automation".

VB-PGN-plus 100 valve box

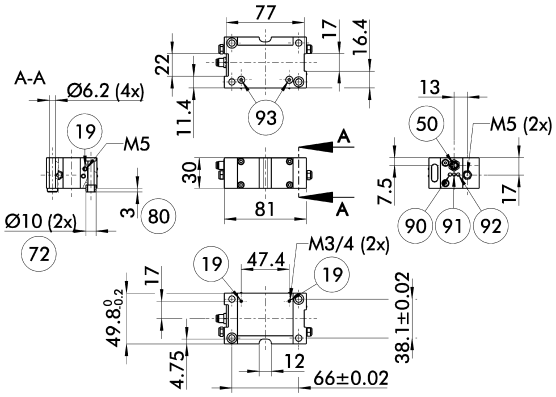

(19) Air connection
(50) Electrical connection
(72) Fit for centering sleeves
(80) Depth of the centering sleeve hole in the mating part
(90) Voltage status indicator
(91) Valve switched b for gripper opened
(92) Valve switched a for gripper opened
(93) Valve connection a and b

Description	ID	
Valve box		
VB-PGN-plus 100	0310094	

Valve box

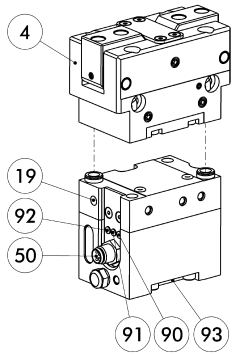

4 Gripper
19 Air connection
50 Electrical connection
90 Power supply
91 Valve switched b for gripper opened
92 Valve switched a for gripper opened
93 Direct connection for hose-free compressed air supply

Ready to install, local control solution! Valves are attached directly to the handling component. As a result, cycle times are significantly reduced and the number of hoses, commissioning times, and air consumption are minimised while maximum process safety is assured.

Description	ID	Often combined
Valve box		
VB-PGN-plus 100	0310094	
Connection cables		
KA BG08-L 4P-0500	0307767	●
KA BG08-L 4P-1000	0307768	
KA BW08-L 4P-0500	0307765	
KA BW08-L 4P-1000	0307766	
KA BG08-L 3P-0300-PNP	0301622	●
KA BG08-L 3P-0500-PNP	0301623	
KA BW08-L 3P-0300-NPN	0301602	
KA BW08-L 3P-0300-PNP	0301594	
KA BW08-L 3P-0500-NPN	9641116	
KA BW08-L 3P-0500-PNP	0301502	
Sensor distributor		
V2-M8-4P-2XM8-3P	0301380	
Cable extensions		
KV BW08-SG08 3P-0030-PNP	0301495	
KV BW08-SG08 3P-0100-PNP	0301496	
KV BW08-SG08 3P-0200-PNP	0301497	●
Clip for plug / socket		
CLI-M8	0301463	

ⓘ Valve and sensor signals of the unit can be merged on a bus distributor so that the electrical as well as the pneumatic connections can be decentralized.

Mounting kit for IN 40 proximity switches

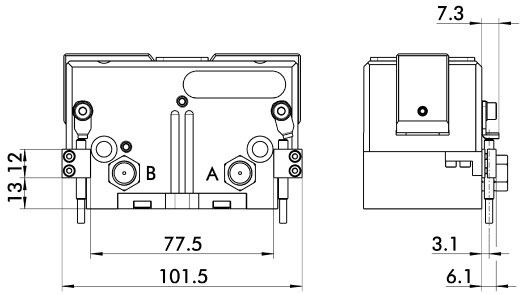

Limit position monitor can be mounted with mounting kit.

Description	ID	
Mounting kit for proximity switch		
AS-IN40-PWG-plus 100	0311740	

ⓘ This mounting kit needs to be ordered optionally as an accessory.

IN 40 inductive proximity switches

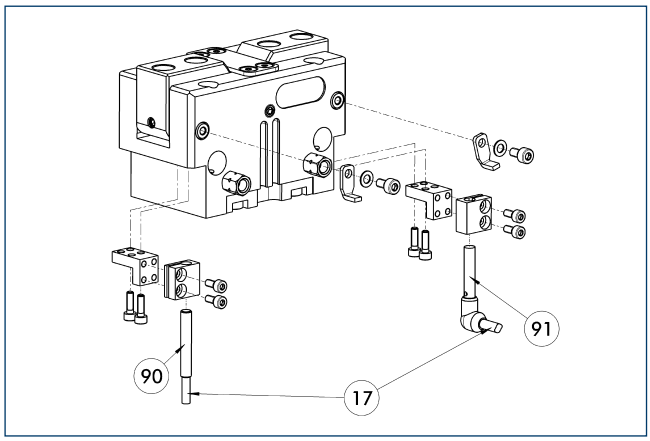

(17) Cable outlet
(91) IN ...-SA sensor
(90) IN ... sensor

Limit position monitor can be mounted with mounting kit.

Description	ID	Often combined
Mounting kit for proximity switch		
AS-IN40-PWG-plus 100	0311740	
Inductive proximity switches		
IN 40-S-M12	0301574	
IN 40-S-M8	0301474	●
INK 40-S	0301555	
Inductive proximity switches with lateral outlet		
IN 40-S-M12-SA	0301577	
IN 40-S-M8-SA	0301473	●
INK 40-S-SA	0301565	
Cable extensions		
KV BG12-SG12 3P-0030-PNP	0301999	
KV BG12-SG12 3P-0060-PNP	0301998	
KV BW08-SG08 3P-0030-PNP	0301495	
KV BW08-SG08 3P-0100-PNP	0301496	
KV BW08-SG08 3P-0200-PNP	0301497	●
KV BW12-SG12 3P-0030-PNP	0301595	
KV BW12-SG12 3P-0100-PNP	0301596	
KV BW12-SG12 3P-0200-PNP	0301597	
Clip for plug / socket		
CLI-M12	0301464	
CLI-M8	0301463	
Connection cables		
KA BG08-L 3P-0300-PNP	0301622	●
KA BG08-L 3P-0500-PNP	0301623	
KA BG12-L 3P-0500-PNP	30016369	
KA BW08-L 3P-0300-PNP	0301594	
KA BW08-L 3P-0500-PNP	0301502	
KA BW12-L 3P-0300-PNP	0301503	
KA BW12-L 3P-0500-PNP	0301507	
Sensor distributor		
V2-M8	0301775	●
V2-M12	0301776	●

ⓘ Two sensors (closer/S) are required for each unit, plus extension cables as an option. This mounting kit needs to be ordered optionally as an accessory. Please note the minimum permitted bending radii for the sensor cables, which are generally 35 mm.

Mounting kit for IN 80 proximity switches

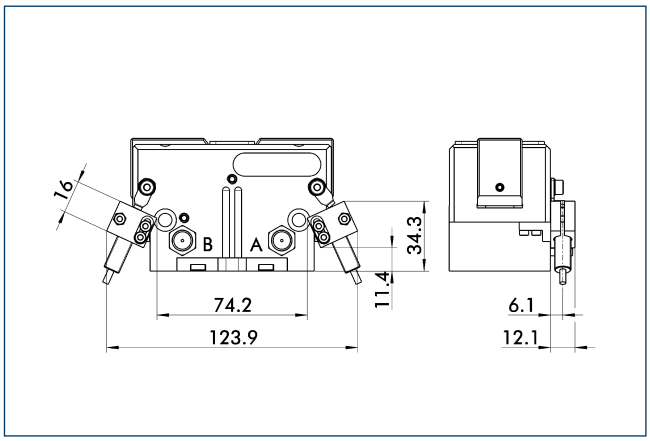

Limit position monitor can be mounted with mounting kit.

Description	ID	
Mounting kit for proximity switch		
AS-IN80-PWG-plus 100	0311741	

ⓘ This mounting kit needs to be ordered optionally as an accessory.

IN 80 inductive proximity switches

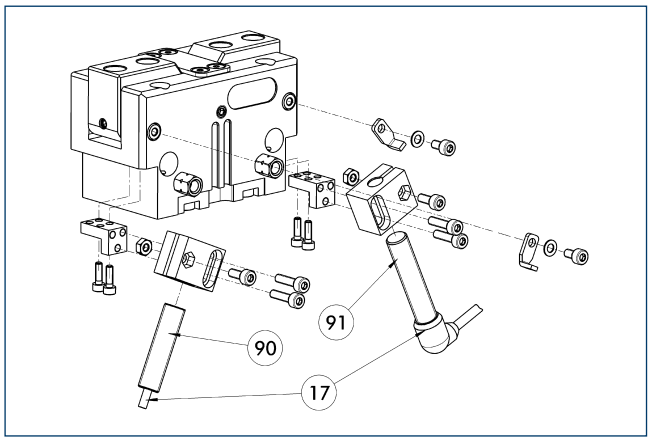

17 Cable outlet
91 IN ...-SA sensor
90 IN ... sensor

Limit position monitor can be mounted with mounting kit.

Description	ID	Often combined
Mounting kit for proximity switch		
AS-IN80-PWG-plus 100	0311741	
Inductive proximity switches		
IN 80-S-M12	0301578	
IN 80-S-M8	0301478	●
IN-C 80-S-M8	0301475	
INK 80-S	0301550	
INK 80-SL	0301579	
Inductive proximity switches with lateral outlet		
IN 80-S-M12-SA	0301587	
IN 80-S-M8-SA	0301483	●
INK 80-S-SA	0301566	
Cable extensions		
KV BG12-SG12 3P-0030-PNP	0301999	
KV BG12-SG12 3P-0060-PNP	0301998	
KV BW08-SG08 3P-0030-PNP	0301495	
KV BW08-SG08 3P-0100-PNP	0301496	
KV BW08-SG08 3P-0200-PNP	0301497	●
KV BW12-SG12 3P-0030-PNP	0301595	
KV BW12-SG12 3P-0100-PNP	0301596	
KV BW12-SG12 3P-0200-PNP	0301597	
Clip for plug / socket		
CLI-M12	0301464	
CLI-M8	0301463	
Connection cables		
KA BG08-L 3P-0300-PNP	0301622	●
KA BG08-L 3P-0500-PNP	0301623	
KA BG12-L 3P-0500-PNP	30016369	
KA BW08-L 3P-0300-PNP	0301594	
KA BW08-L 3P-0500-PNP	0301502	
KA BW12-L 3P-0300-PNP	0301503	
KA BW12-L 3P-0500-PNP	0301507	
Sensor distributor		
V2-M12	0301776	●
V2-M8	0301775	●

ⓘ Two sensors (closer/S) are required for each unit, plus extension cables as an option. This mounting kit needs to be ordered optionally as an accessory. Please note the minimum permitted bending radii for the sensor cables, which are generally 35 mm.

MMS electronic magnetic switches

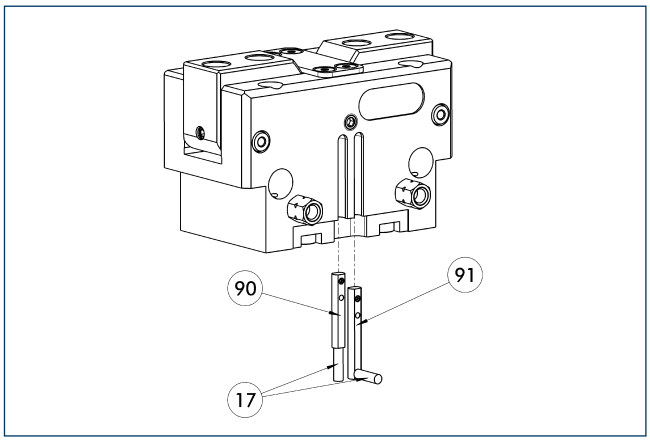

17 Cable outlet
91 MMS 22...-SA sensor
90 MMS 22... sensor

End position monitoring for mounting in the C-slot.

Description	ID	Often combined
MMS electronic magnetic switches		
MMS 22-S-M8-PNP	0301032	●
MMSK 22-S-PNP	0301034	
MMS electronic magnetic switches with lateral cable outlet		
MMS 22-S-M8-PNP-SA	0301042	●
MMSK 22-S-PNP-SA	0301044	
Cable extensions		
KV BW08-SG08 3P-0030-PNP	0301495	
KV BW08-SG08 3P-0100-PNP	0301496	
KV BW08-SG08 3P-0200-PNP	0301497	●
Clip for plug / socket		
CLI-M8	0301463	
Connection cables		
KA BG08-L 3P-0300-PNP	0301622	●
KA BG08-L 3P-0500-PNP	0301623	
KA BW08-L 3P-0300-PNP	0301594	
KA BW08-L 3P-0500-PNP	0301502	
Sensor distributor		
V2-M8	0301775	●
V4-M8	0301746	
V8-M8	0301751	

ⓘ Two sensors (closer/S) are required for each unit, plus extension cables as an option. Please note the minimum permitted bending radii for the sensor cables, which are generally 35 mm.

MMS PI1 programmable magnetic switches

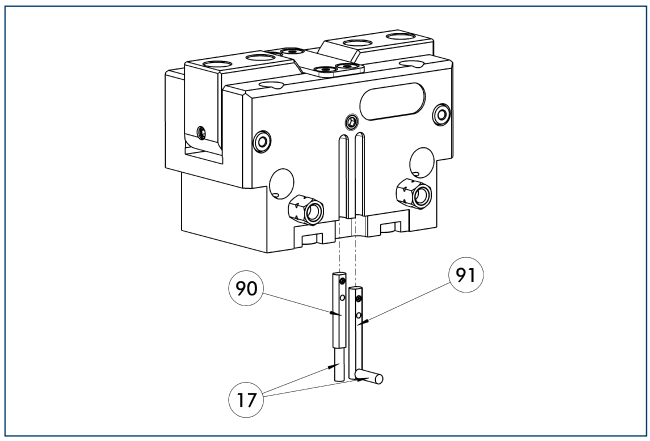

(17) Cable outlet
(91) MMS 22...-PI1-...-SA sensor
(90) MMS 22...-PI1-... sensor

Position query with one programmable position per sensor and electronics integrated in sensor. Programmable via MT magnet teaching tool (included in the scope of delivery) or ST plug teaching tool (optional). Limit position query mounted in C-groove. If the ST plug teaching tools are listed in the table, teaching can only take place with the ST plug teaching tools.

Description	ID	Often combined
MMS PI1 programmable magnetic switches		
MMS 22-PI1-S-M8-PNP	0301160	●
MMSK 22-PI1-S-PNP	0301162	
MMS PI1-HD programmable magnetic switches with stainless steel housing		
MMS 22-PI1-S-M8-PNP-HD	0301110	●
MMSK 22-PI1-S-PNP-HD	0301112	
MMS PI1 programmable magnetic switches with lateral cable outlet		
MMS 22-PI1-S-M8-PNP-SA	0301166	●
MMSK 22-PI1-S-PNP-SA	0301168	

ⓘ Two sensors (closer/S) are required for each unit, plus extension cables as an option. Please note the minimum permitted bending radii for the sensor cables, which are generally 35 mm. Connection cable, cable extensions, and sensor distributors can be found in the table for the MMS 22.

MMS PI2 programmable magnetic switches

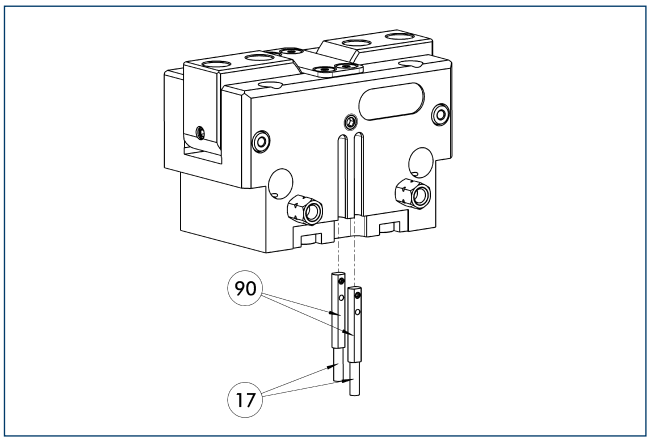

(17) Cable outlet
(90) MMS 22...-PI2-... sensor

Position query with two programmable positions per sensor and electronics integrated in sensor. Programmable via MT magnet teaching tool (included in the scope of delivery) or ST plug teaching tool (optional). Limit position query mounted in C-groove. If the ST plug teaching tools are listed in the table, teaching can only take place with the ST plug teaching tools.

Description	ID	Often combined
MMS PI2 programmable magnetic switches		
MMS 22-PI2-S-M8-PNP	0301180	●
MMSK 22-PI2-S-PNP	0301182	
MMS PI2-HD programmable magnetic switches with stainless steel housing		
MMS 22-PI2-S-M8-PNP-HD	0301130	●
MMSK 22-PI2-S-PNP-HD	0301132	

ⓘ Per unit one sensor (closer/S) is required, optionally a cable extension. Please note the minimum permitted bending radii for the sensor cables, which are generally 35 mm. Connection cable, cable extensions, and sensor distributors can be found in the table for the MMS-P 22.

MMS-P programmable magnetic switches

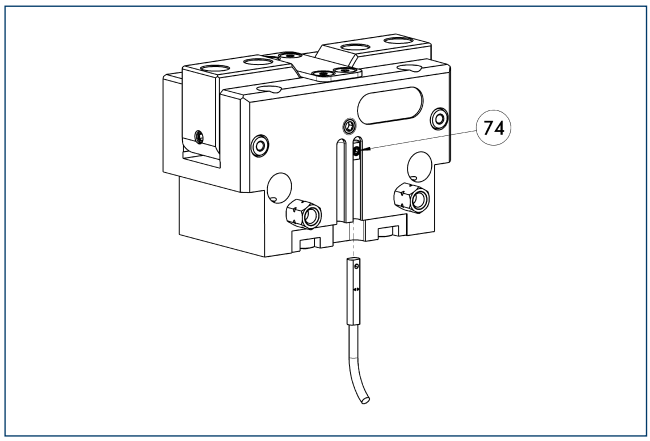

74 Stop for MMS-P

Position monitoring with two programmable positions per sensor. The end position monitoring is mounted in the C-slot.

Description	ID	Often combined
MMS-P programmable magnetic switches		
MMSK-P 22-S-PNP	0301371	
MMS-P 22-S-M8-PNP	0301370	●
Clip for plug / socket		
CLI-M8	0301463	
Connection cables		
KA BG08-L 4P-0500	0307767	●
KA BG08-L 4P-1000	0307768	
KA BW08-L 4P-0500	0307765	
KA BW08-L 4P-1000	0307766	
Sensor distributor		
V2-M8-4P-2XM8-3P	0301380	

ⓘ Per unit one sensor (closer/S) is required, optionally a cable extension. Please note the minimum permitted bending radii for the sensor cables, which are generally 35 mm.

PWG-plus 125

SCHUNK Grippers pneumatic | 2-Finger Angular Grippers | Universal Gripper

Gripping force, O.D. gripping

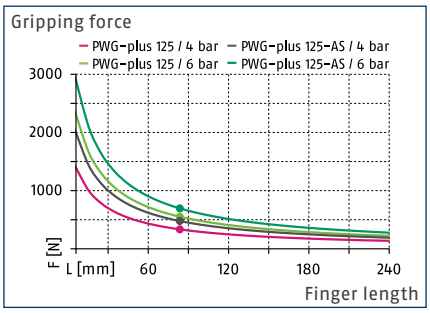

Closing moment curve

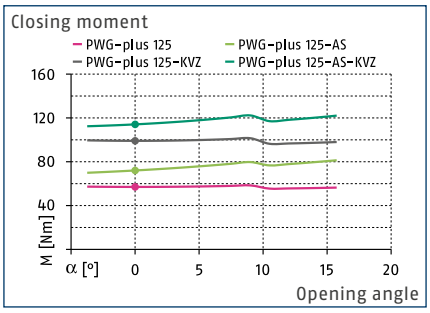

Forces and moments

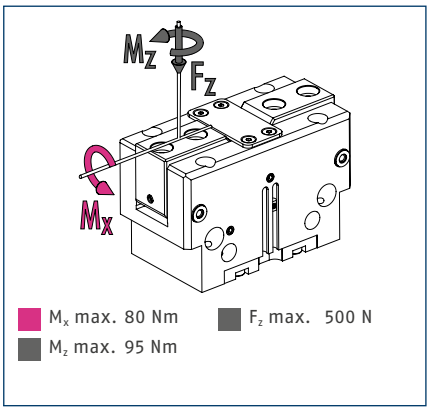

ⓘ The indicated moments and forces are statical values, apply for each base jaw and should not appear simultaneously. If the max. permitted finger weight is exceeded, it is impreative to throttle the air supply so that the jaw movement occurs without any hitting or bouncing. Service life may be reduced.

Technical data

Description		PWG-plus 125	PWG-plus 125-AS
ID		0311650	0311651
Opening angle per jaw	[°]	15	15
Closed angle per jaw up to	[°]	3	3
Closing moment	[Nm]	57	72
Spring-actuated closing moment	[Nm]		15
Weight	[kg]	1.35	1.85
Recommended workpiece weight	[kg]	2.78	2.78
Fluid consumption per double stroke	[cm³]	75.5	107
min. / max. operating pressure	[bar]	2/8	4/6.5
Nominal operating pressure	[bar]	6	6
Closing- / opening time	[s]	0.14/0.14	0.12/0.2
max. permitted finger length	[mm]	160	160
max. mass moment of inertia per jaw*	[kgcm²]	203.9	203.9
IP class		30	30
min. / max. ambient temperature	[°C]	5/90	5/90
Repeat accuracy	[mm]	0.02	0.02
Options and their characteristics			
High-temperature version		39311650	39311651
min. / max. ambient temperature	[°C]	5/130	5/130
Force intensified version		0311655	0311656
Closing moment	[Nm]	99	114
Spring-actuated closing moment			15
Weight	[kg]	1.85	2.3
Maximum pressure	[bar]	6	6
max. permitted finger length	[mm]	160	160

*The unit can be actuated without an external customized throttling at the given value of max. mass moment of inertia per jaw. In case of higher mass moments of inertia, an additional throttling is possible.
The full gripping force according to the data table is only realised after around 100 gripping cycles.

Main view

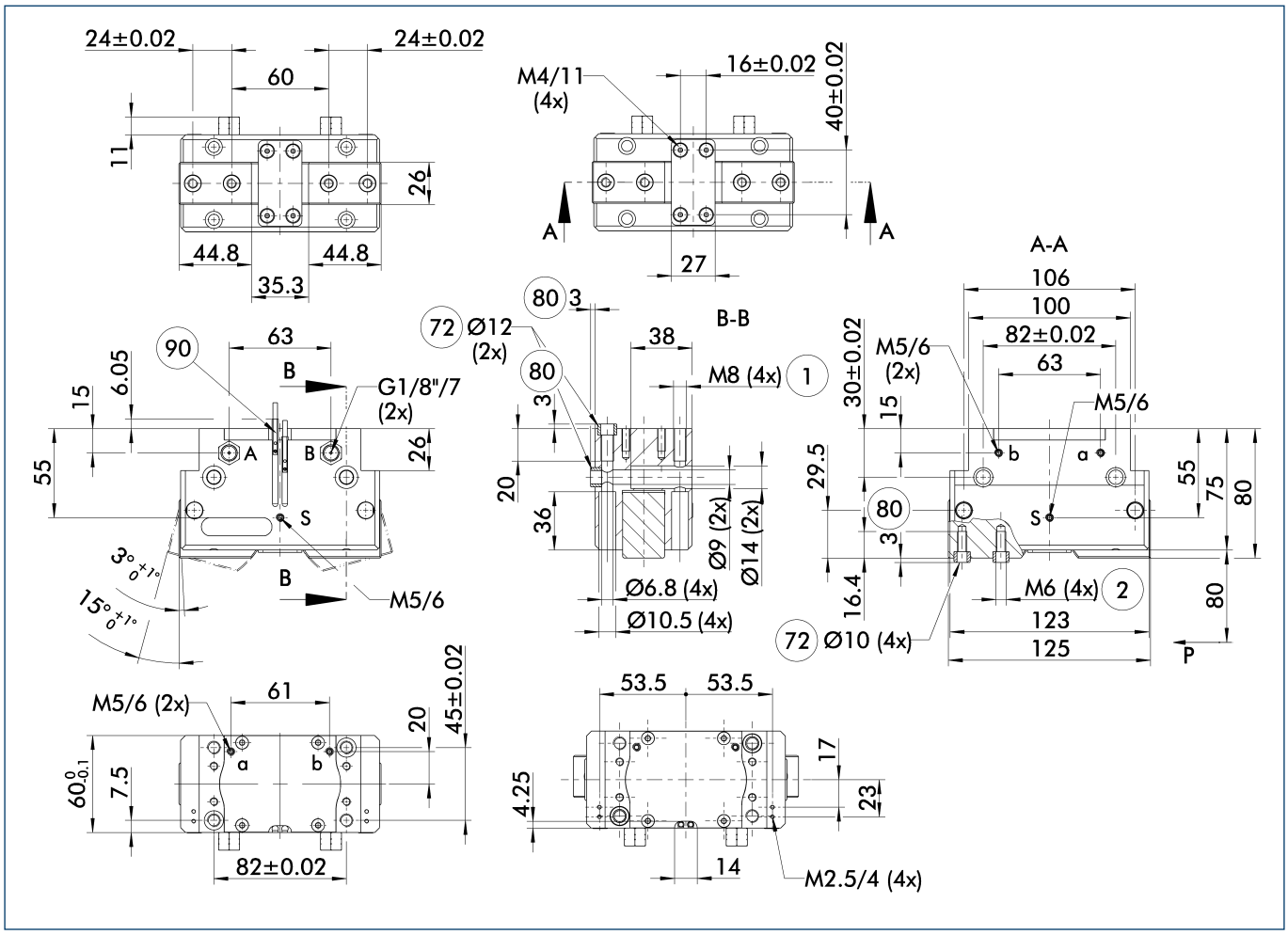

The drawing shows the gripper in the basic version with closed jaws, without dimensional consideration of the options described below.

ⓘ The SDV-P pressure maintenance valve can also be used for I.D. or O.D. gripping alternatively or in addition to the spring-loaded, mechanical gripping force maintenance device (see catalog section on "Accessories").

A, a Main / direct connection, gripper opening

B, b Main / direct connection, gripper closing

S Air purge connection (0.5 ... 1 bar)

(1) Gripper connection

(2) Finger connection

(72) Fit for centering sleeves

(80) Depth of the centering sleeve hole in the mating part

(90) MMS 22... sensor

Maximum permitted finger projection

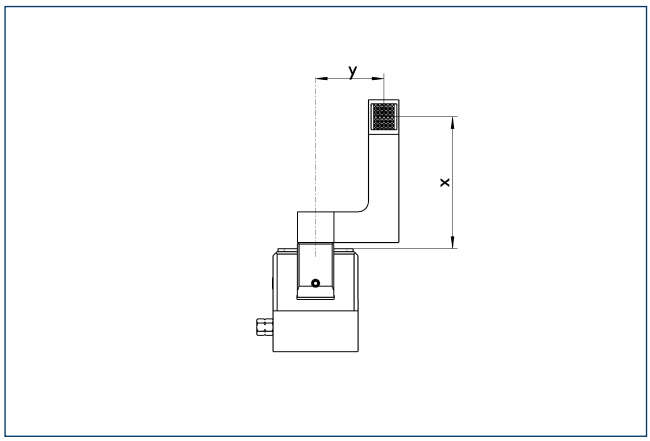

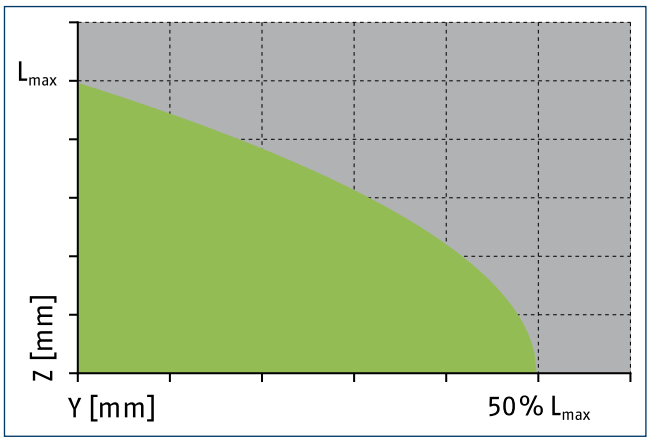

Permitted range

Inadmissible range

L_{max} is equivalent to the maximum permitted finger length, see the chart of technical specifications.

Hose-free direct connection M5

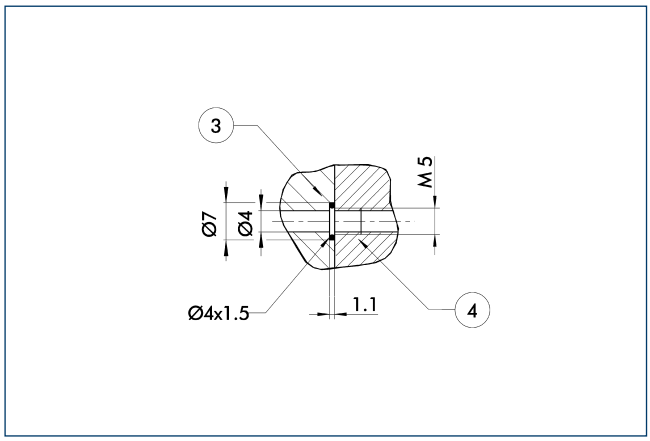

(3) Adapter (4) Gripper

The direct connection is used for supplying compressed air without hoses. Instead, the pressure medium is fed through bore-holes in the mounting plate.

Gripping force maintenance device

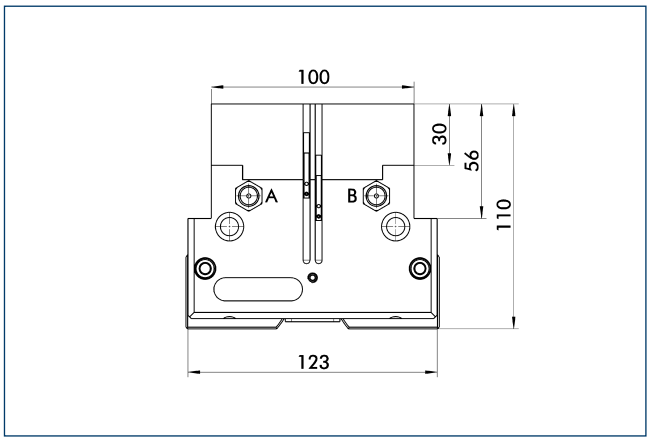

The mechanical gripping force maintenance device ensures a minimum gripping force even in case of pressure drop. This acts as closing force in the AS version. In addition, the gripping force maintenance device can also be used for increasing the gripping force or for single-acting gripping.

Shaft support

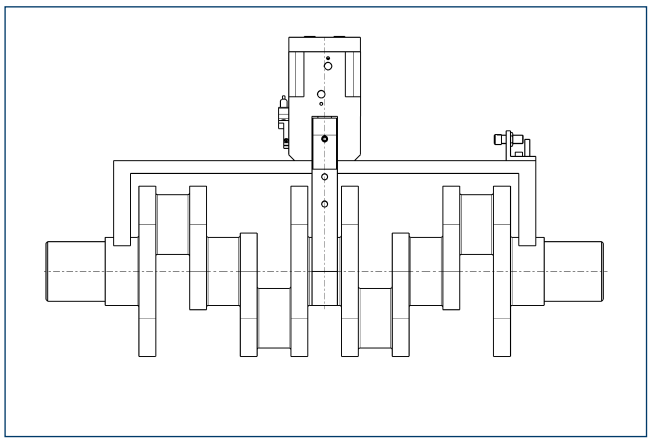

The complete assembly group for handling of crank or cam shaft can be supplied on request.

Force intensified version

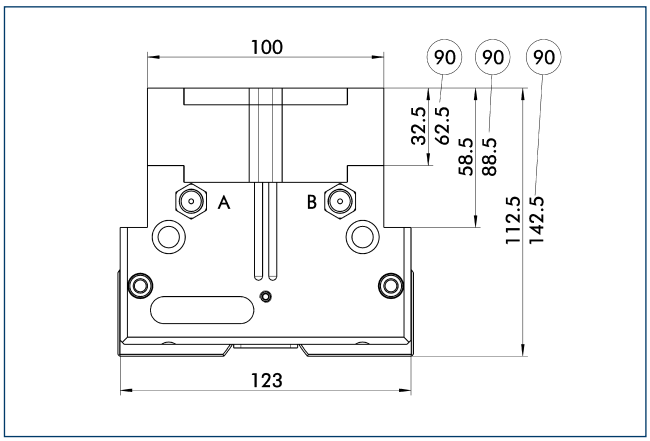

(90) Applies to AS version

The KVZ power booster cylinder increases gripping forces for opening and closing. A second piston connected in a series increases the force on the diagonal pull for this purpose. If applicable, observe the additional installation height for combination with an element for maintenance of gripping force.

Mounting kit for opening angle limitation

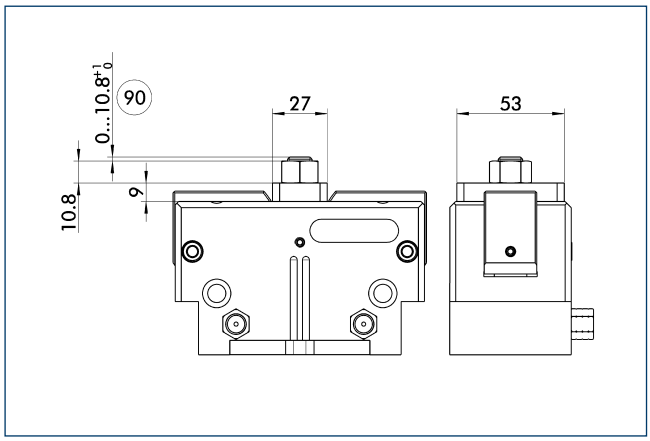

(90) Max. adjustment

Stepless adjustment of the opening angle is possible with a mounting kit.

Description	ID	
Stroke adjustment		
HVE-PWG-plus 125	0311753	

SDV-P pressure maintenance valve

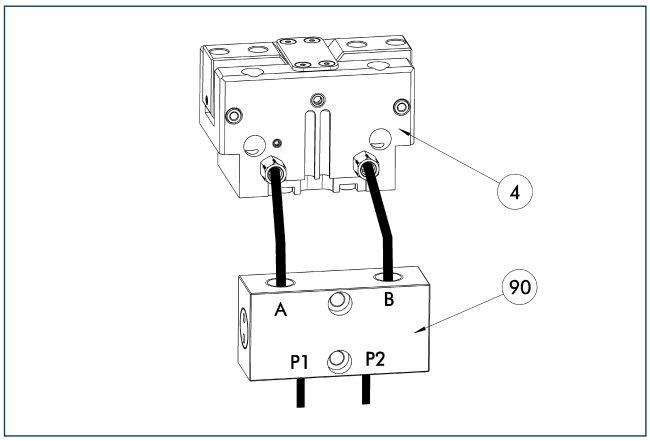

(4) Gripper
(90) SDV-P pressure maintenance valve

The SDV-P pressure maintenance valves ensure that the pressure in the piston chamber of pneumatic gripping, rotary, linear, and quick-change modules is maintained temporarily during an emergency stop.

Description	ID	
Pressure maintenance valve		
SDV-P 04	0403130	

BSWS jaw quick-change systems

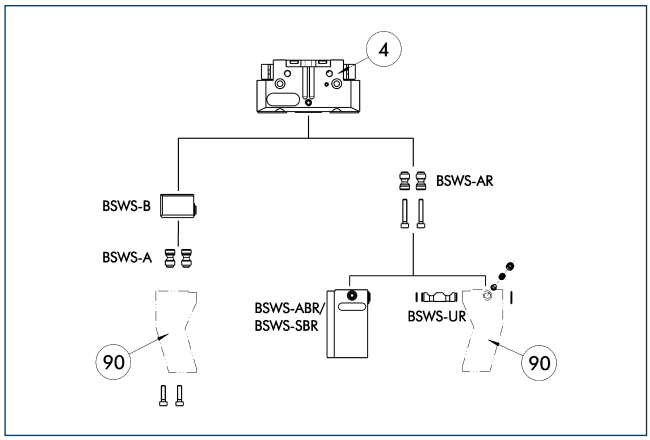

(4) Gripper
(90) Customized gripper fingers

There are various jaw quick-change systems available for the grippers. For detailed information, refer to the appropriate product.

Description	ID	
Jaw quick-change system adapter		
BSWS-AR 125	0300095	
BSWS-A 125	0303028	
Jaw quick-change system base		
BSWS-B 125	0303029	
Finger blanks with jaw quick-change system		
BSWS-ABR-PGZN-plus 125	0300075	
BSWS-SBR-PGZN-plus 125	0300085	
Jaw quick-change system reversed		
BSWS-UR 125	0302994	

ⓘ Only the systems listed in the table can be used.

ZBA L-plus 125 intermediate jaws

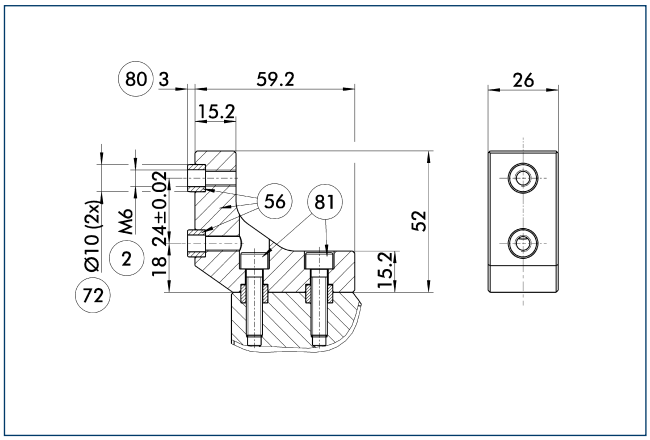

(2) Finger connection
(56) Included in delivery
(72) Fit for centering sleeves
(80) Depth of the centering sleeve hole in the mating part
(81) Not included in the scope of delivery

Optionally intermediate jaws can be used, enabling direct connection and alignment of top jaws and various standard accessories in Z-direction.

Description	ID	Material	Scope of delivery
Intermediate jaws			
ZBA-L-plus 125	0311752	Aluminum	1

FMS-ZBA / ZBP 125 force-measuring jaws

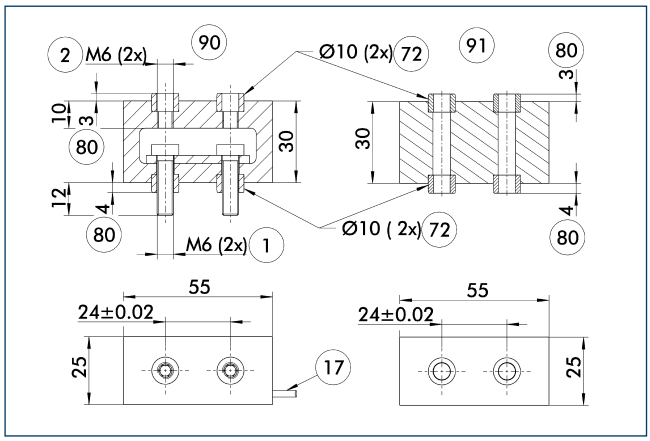

(1) Gripper connection
(2) Finger connection
(17) Cable outlet
(72) Fit for centering sleeves
(80) Depth of the centering sleeve hole in the mating part
(90) Active intermediate jaws
(91) Passive intermediate jaws

Force measuring jaws measure gripping forces, but can also determine workpiece weights or dimensional deviations. There are active and passive intermediate jaws (FMS-ZBA or FMS-ZBP). At least one active force measuring jaw is required per gripper, the rest can be passive. For each active jaw, a FMS-A control unit and a FMS-AK connection cable are required.

Description	ID	Often combined
Active intermediate jaws		
FMS-ZBA 125	0301838	
Passive intermediate jaws		
FMS-ZBP 125	0301839	
Connection cables		
FMS-AK0200	0301820	●
FMS-AK0500	0301821	
FMS-AK1000	0301822	
FMS-AK2000	0301823	
Electronic processor		
FMS-A1	0301810	

ABR- / SBR-PGZN-plus 125 finger blanks

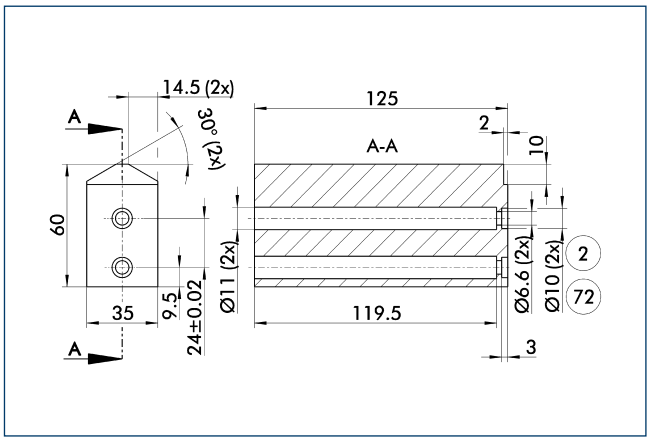

(2) Finger connection
(72) Fit for centering sleeves

Finger blanks for customized subsequent machining.

Description	ID	Material	Scope of delivery
Finger blanks			
ABR-PGZN-plus 125	0300013	Aluminum	1
SBR-PGZN-plus 125	0300023	16MnCr5	1

Attachment valves

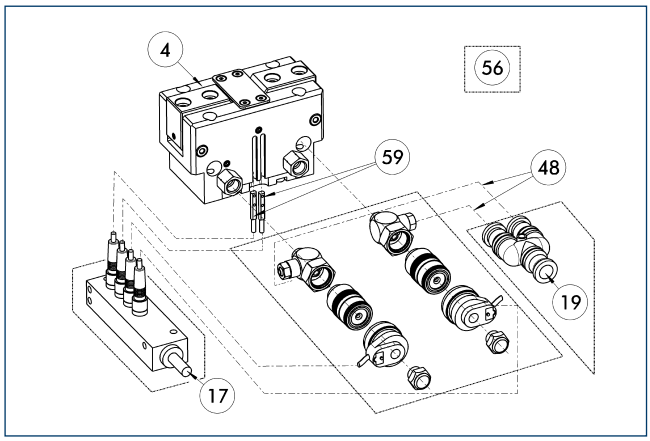

(4) Gripper
(17) Cable outlet
(19) Air connection
(48) Hose
(56) Included in delivery
(59) Monitoring gripping

For each unit one attachment valve ABV is required, optional with distributor for sensors and valves. Attachment valves increase the efficiency, reduce the installation work and air consumption and simplify air supply. For details please refer to the "Accessories" catalog section.

Description	ID	Often combined
Attachment valves		
ABV-MV30-G1/8	0303328	
ABV-MV30-G1/8-V2-M8	0303396	
ABV-MV30-G1/8-V4-M8	0303366	●
ABV-MV30-G1/8-V8-M8	0303367	

Modular assembly automation

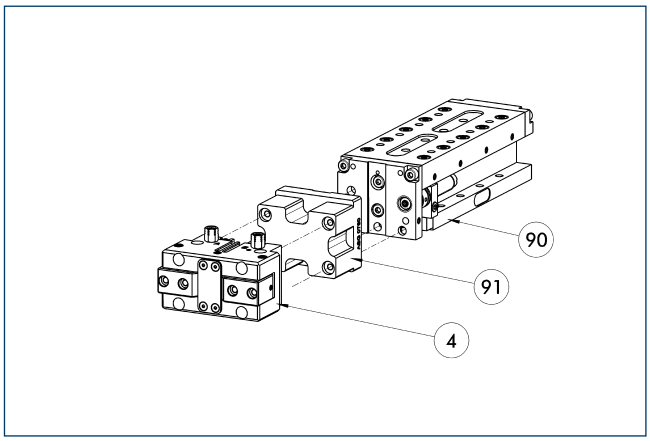

(4) Gripper
(90) CLM / KLM / LM / ELM / ELS / HLM linear module
(91) ASG adapter plate

Gripper and linear modules can be combined with standard adapters out of the modular assembly system. For more information see our catalog "Modular Assembly Automation".

Mounting kit for IN 40 proximity switches

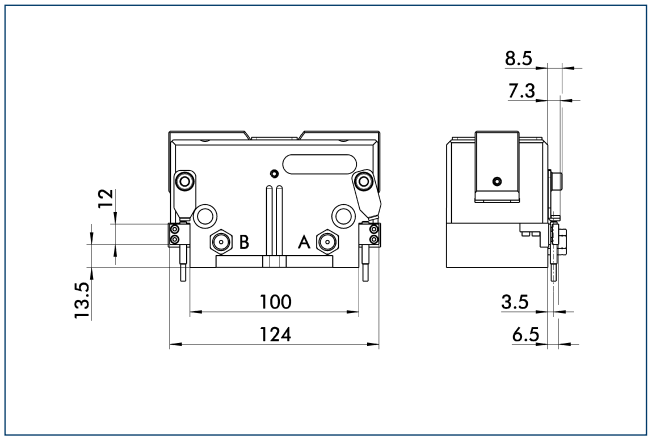

Limit position monitor can be mounted with mounting kit.

Description	ID	
Mounting kit for proximity switch		
AS-IN40-PWG-plus 125	0311750	

ⓘ This mounting kit needs to be ordered optionally as an accessory.

IN 40 inductive proximity switches

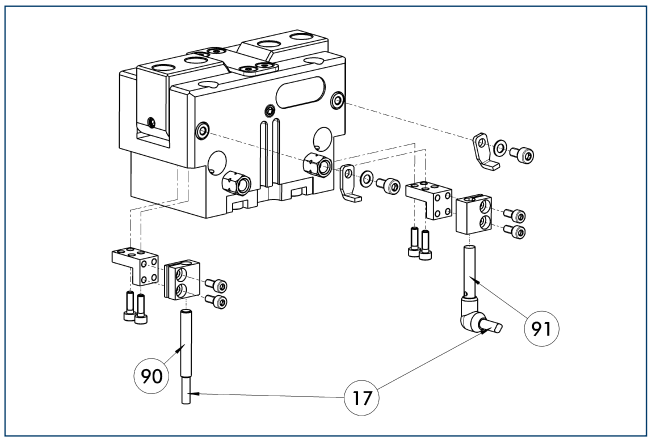

(17) Cable outlet
(91) IN ...-SA sensor
(90) IN ... sensor

Limit position monitor can be mounted with mounting kit.

Description	ID	Often combined
Mounting kit for proximity switch		
AS-IN40-PWG-plus 125	0311750	
Inductive proximity switches		
IN 40-S-M12	0301574	
IN 40-S-M8	0301474	●
INK 40-S	0301555	
Inductive proximity switches with lateral outlet		
IN 40-S-M12-SA	0301577	
IN 40-S-M8-SA	0301473	●
INK 40-S-SA	0301565	
Cable extensions		
KV BG12-SG12 3P-0030-PNP	0301999	
KV BG12-SG12 3P-0060-PNP	0301998	
KV BW08-SG08 3P-0030-PNP	0301495	
KV BW08-SG08 3P-0100-PNP	0301496	
KV BW08-SG08 3P-0200-PNP	0301497	●
KV BW12-SG12 3P-0030-PNP	0301595	
KV BW12-SG12 3P-0100-PNP	0301596	
KV BW12-SG12 3P-0200-PNP	0301597	
Clip for plug / socket		
CLI-M12	0301464	
CLI-M8	0301463	
Connection cables		
KA BG08-L 3P-0300-PNP	0301622	●
KA BG08-L 3P-0500-PNP	0301623	
KA BG12-L 3P-0500-PNP	30016369	
KA BW08-L 3P-0300-PNP	0301594	
KA BW08-L 3P-0500-PNP	0301502	
KA BW12-L 3P-0300-PNP	0301503	
KA BW12-L 3P-0500-PNP	0301507	
Sensor distributor		
V2-M8	0301775	●
V2-M12	0301776	●

ⓘ Two sensors (closer/S) are required for each unit, plus extension cables as an option. This mounting kit needs to be ordered optionally as an accessory. Please note the minimum permitted bending radii for the sensor cables, which are generally 35 mm.

Mounting kit for IN 80 proximity switches

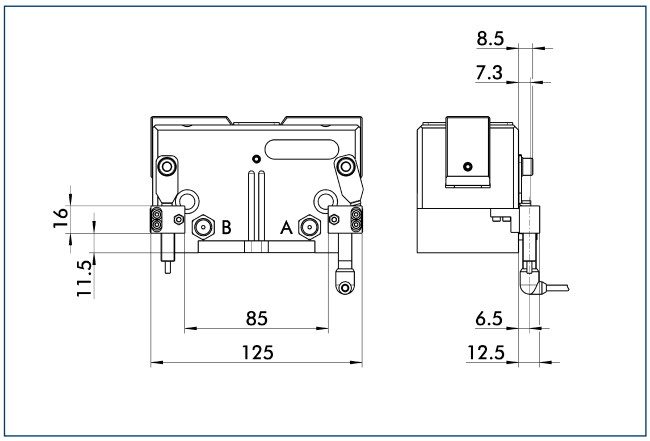

Limit position monitor can be mounted with mounting kit.

Description	ID	
Mounting kit for proximity switch		
AS-IN80-PWG-plus 125	0311751	

ⓘ This mounting kit needs to be ordered optionally as an accessory.

IN 80 inductive proximity switches

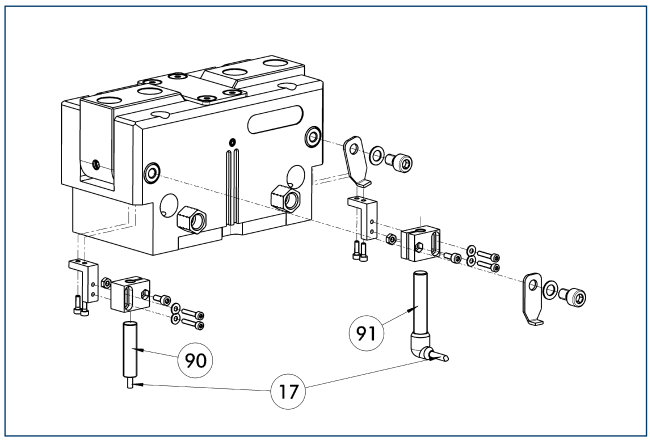

(17) Cable outlet
(91) IN ...-SA sensor
(90) IN ... sensor

Limit position monitor can be mounted with mounting kit.

Description	ID	Often combined
Mounting kit for proximity switch		
AS-IN80-PWG-plus 125	0311751	
Inductive proximity switches		
IN 80-S-M12	0301578	
IN 80-S-M8	0301478	●
IN-C 80-S-M8	0301475	
INK 80-S	0301550	
INK 80-SL	0301579	
Inductive proximity switches with lateral outlet		
IN 80-S-M12-SA	0301587	
IN 80-S-M8-SA	0301483	●
INK 80-S-SA	0301566	
Cable extensions		
KV BG12-SG12 3P-0030-PNP	0301999	
KV BG12-SG12 3P-0060-PNP	0301998	
KV BW08-SG08 3P-0030-PNP	0301495	
KV BW08-SG08 3P-0100-PNP	0301496	
KV BW08-SG08 3P-0200-PNP	0301497	●
KV BW12-SG12 3P-0030-PNP	0301595	
KV BW12-SG12 3P-0100-PNP	0301596	
KV BW12-SG12 3P-0200-PNP	0301597	
Clip for plug / socket		
CLI-M12	0301464	
CLI-M8	0301463	
Connection cables		
KA BG08-L 3P-0300-PNP	0301622	●
KA BG08-L 3P-0500-PNP	0301623	
KA BG12-L 3P-0500-PNP	30016369	
KA BW08-L 3P-0300-PNP	0301594	
KA BW08-L 3P-0500-PNP	0301502	
KA BW12-L 3P-0300-PNP	0301503	
KA BW12-L 3P-0500-PNP	0301507	
Sensor distributor		
V2-M12	0301776	●
V2-M8	0301775	●

ⓘ Two sensors (closer/S) are required for each unit, plus extension cables as an option. This mounting kit needs to be ordered optionally as an accessory. Please note the minimum permitted bending radii for the sensor cables, which are generally 35 mm.

MMS electronic magnetic switches

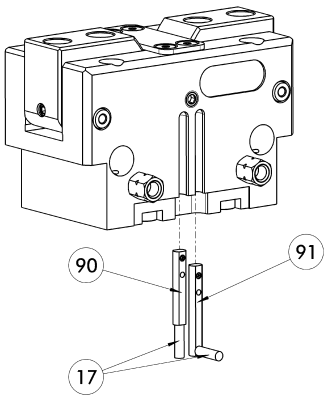

(17) Cable outlet
(91) MMS 22...-SA sensor
(90) MMS 22... sensor

End position monitoring for mounting in the C-slot.

Description	ID	Often combined
MMS electronic magnetic switches		
MMS 22-S-M8-PNP	0301032	●
MMSK 22-S-PNP	0301034	
MMS electronic magnetic switches with lateral cable outlet		
MMS 22-S-M8-PNP-SA	0301042	●
MMSK 22-S-PNP-SA	0301044	
Cable extensions		
KV BW08-SG08 3P-0030-PNP	0301495	
KV BW08-SG08 3P-0100-PNP	0301496	
KV BW08-SG08 3P-0200-PNP	0301497	●
Clip for plug / socket		
CLI-M8	0301463	
Connection cables		
KA BG08-L 3P-0300-PNP	0301622	●
KA BG08-L 3P-0500-PNP	0301623	
KA BW08-L 3P-0300-PNP	0301594	
KA BW08-L 3P-0500-PNP	0301502	
Sensor distributor		
V2-M8	0301775	●
V4-M8	0301746	
V8-M8	0301751	

ⓘ Two sensors (closer/S) are required for each unit, plus extension cables as an option. Please note the minimum permitted bending radii for the sensor cables, which are generally 35 mm.

MMS PI1 programmable magnetic switches

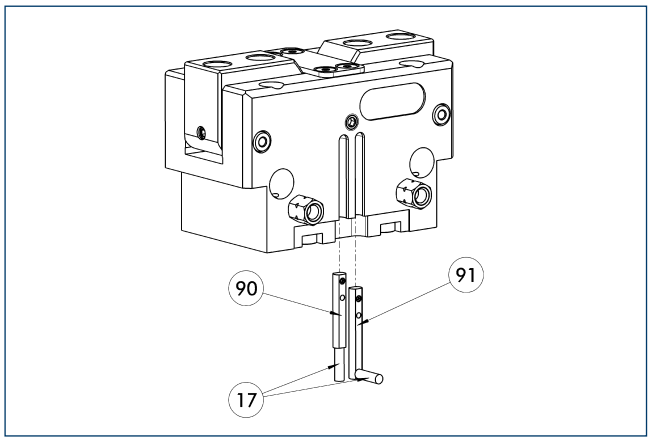

(17) Cable outlet
(91) MMS 22...-PI1-...-SA sensor
(90) MMS 22...-PI1-... sensor

Position query with one programmable position per sensor and electronics integrated in sensor. Programmable via MT magnet teaching tool (included in the scope of delivery) or ST plug teaching tool (optional). Limit position query mounted in C-groove. If the ST plug teaching tools are listed in the table, teaching can only take place with the ST plug teaching tools.

Description	ID	Often combined
MMS PI1 programmable magnetic switches		
MMS 22-PI1-S-M8-PNP	0301160	●
MMSK 22-PI1-S-PNP	0301162	
MMS PI1-HD programmable magnetic switches with stainless steel housing		
MMS 22-PI1-S-M8-PNP-HD	0301110	●
MMSK 22-PI1-S-PNP-HD	0301112	
MMS PI1 programmable magnetic switches with lateral cable outlet		
MMS 22-PI1-S-M8-PNP-SA	0301166	●
MMSK 22-PI1-S-PNP-SA	0301168	

ⓘ Two sensors (closer/S) are required for each unit, plus extension cables as an option. Please note the minimum permitted bending radii for the sensor cables, which are generally 35 mm. Connection cable, cable extensions, and sensor distributors can be found in the table for the MMS 22.

MMS PI2 programmable magnetic switches

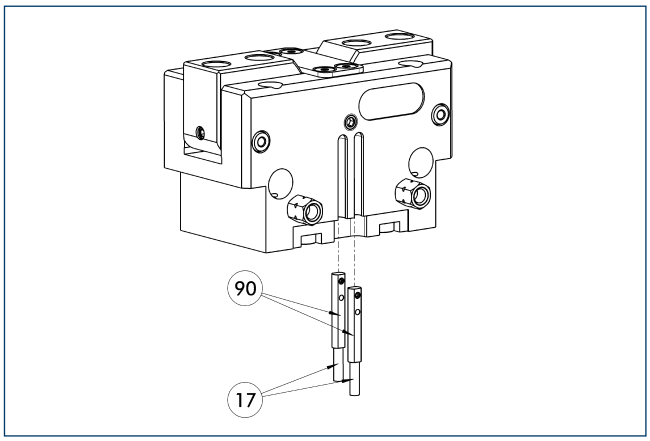

(17) Cable outlet
(90) MMS 22...-PI2-... sensor

Position query with two programmable positions per sensor and electronics integrated in sensor. Programmable via MT magnet teaching tool (included in the scope of delivery) or ST plug teaching tool (optional). Limit position query mounted in C-groove. If the ST plug teaching tools are listed in the table, teaching can only take place with the ST plug teaching tools.

Description	ID	Often combined
MMS PI2 programmable magnetic switches		
MMS 22-PI2-S-M8-PNP	0301180	●
MMSK 22-PI2-S-PNP	0301182	
MMS PI2-HD programmable magnetic switches with stainless steel housing		
MMS 22-PI2-S-M8-PNP-HD	0301130	●
MMSK 22-PI2-S-PNP-HD	0301132	

ⓘ Per unit one sensor (closer/S) is required, optionally a cable extension. Please note the minimum permitted bending radii for the sensor cables, which are generally 35 mm. Connection cable, cable extensions, and sensor distributors can be found in the table for the MMS-P 22.

MMS-P programmable magnetic switches

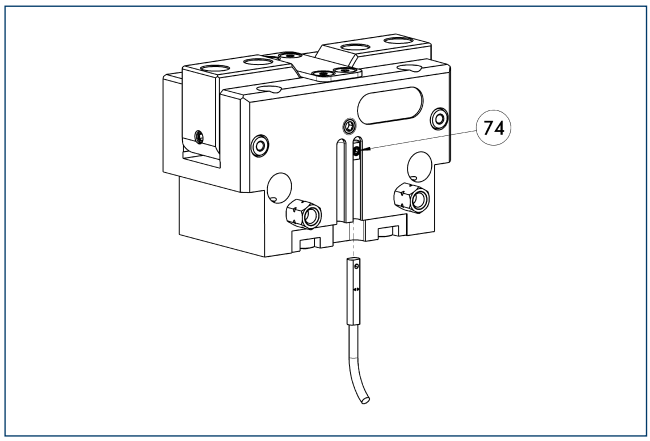

74 Stop for MMS-P

Position monitoring with two programmable positions per sensor. The end position monitoring is mounted in the C-slot.

Description	ID	Often combined
MMS-P programmable magnetic switches		
MMSK-P 22-S-PNP	0301371	
MMS-P 22-S-M8-PNP	0301370	●
Clip for plug / socket		
CLI-M8	0301463	
Connection cables		
KA BG08-L 4P-0500	0307767	●
KA BG08-L 4P-1000	0307768	
KA BW08-L 4P-0500	0307765	
KA BW08-L 4P-1000	0307766	
Sensor distributor		
V2-M8-4P-2XM8-3P	0301380	

ⓘ Per unit one sensor (closer/S) is required, optionally a cable extension. Please note the minimum permitted bending radii for the sensor cables, which are generally 35 mm.

PWG-plus 160

SCHUNK Grippers pneumatic | 2-Finger Angular Grippers | Universal Gripper

Gripping force, O.D. gripping

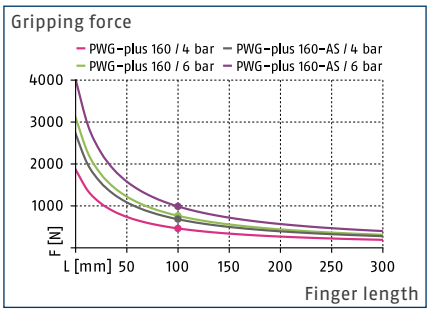

Closing moment curve

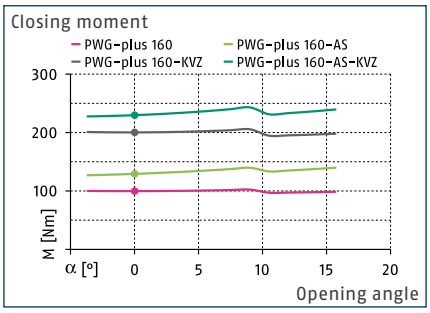

Forces and moments

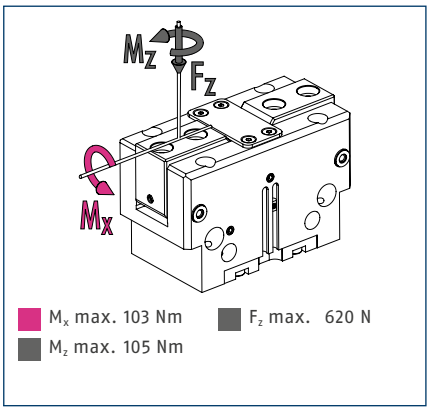

ⓘ The indicated moments and forces are statical values, apply for each base jaw and should not appear simultaneously. If the max. permitted finger weight is exceeded, it is impreative to throttle the air supply so that the jaw movement occurs without any hitting or bouncing. Service life may be reduced.

Technical data

Description		PWG-plus 160	PWG-plus 160-AS
ID		0311660	0311661
Opening angle per jaw	[°]	15	15
Closed angle per jaw up to	[°]	3	3
Closing moment	[Nm]	100	129
Spring-actuated closing moment	[Nm]		29.5
Weight	[kg]	2.12	3.12
Recommended workpiece weight	[kg]	3.86	3.86
Fluid consumption per double stroke	[cm³]	135	178
min. / max. operating pressure	[bar]	2/8	4/6.5
Nominal operating pressure	[bar]	6	6
Closing- / opening time	[s]	0.16/0.13	0.13/0.21
max. permitted finger length	[mm]	200	200
max. mass moment of inertia per jaw*	[kgcm²]	560.7	560.7
IP class		30	30
min. / max. ambient temperature	[°C]	5/90	5/90
Repeat accuracy	[mm]	0.02	0.02
Options and their characteristics			
High-temperature version		39311660	39311661
min. / max. ambient temperature	[°C]	5/130	5/130
Force intensified version		0311665	0311666
Closing moment	[Nm]	200	229.5
Spring-actuated closing moment			29.5
Weight	[kg]	2.92	3.92
Maximum pressure	[bar]	6	6
max. permitted finger length	[mm]	200	200

ⓘ *The unit can be actuated without an external customized throttling at the given value of max. mass moment of inertia per jaw. In case of higher mass moments of inertia, an additional throttling is possible.
The full gripping force according to the data table is only realised after around 100 gripping cycles.

Main view

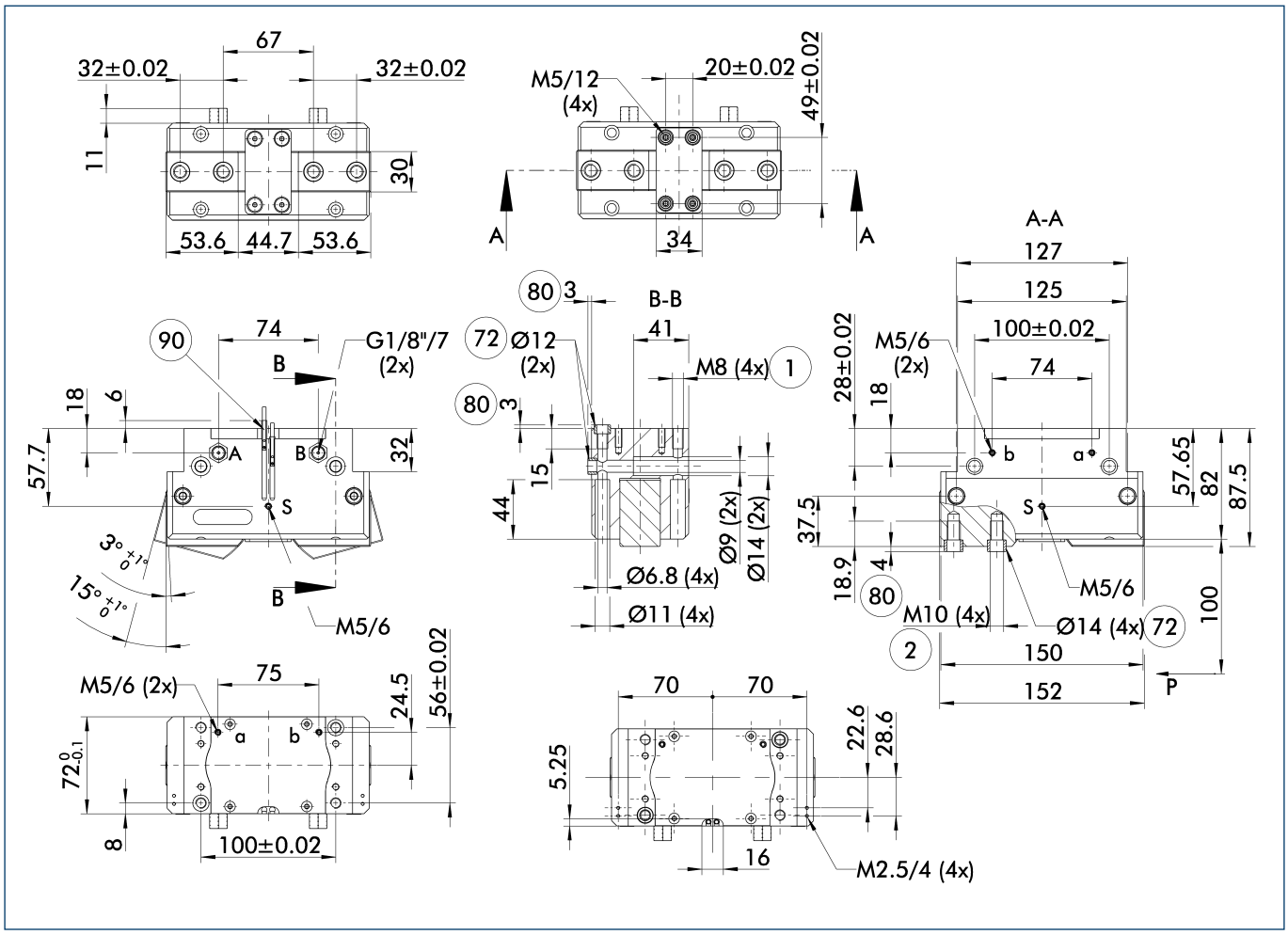

The drawing shows the gripper in the basic version with closed jaws, without dimensional consideration of the options described below.

ⓘ The SDV-P pressure maintenance valve can also be used for I.D. or O.D. gripping alternatively or in addition to the spring-loaded, mechanical gripping force maintenance device (see catalog section on "Accessories").

A, a Main / direct connection, gripper opening

B, b Main / direct connection, gripper closing

S Air purge connection (0.5 ... 1 bar)

(1) Gripper connection

(2) Finger connection

(72) Fit for centering sleeves

(80) Depth of the centering sleeve hole in the mating part

(90) MMS 22... sensor

Maximum permitted finger projection

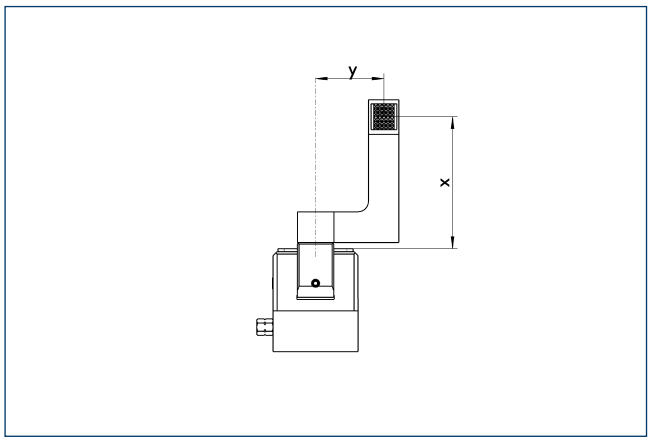

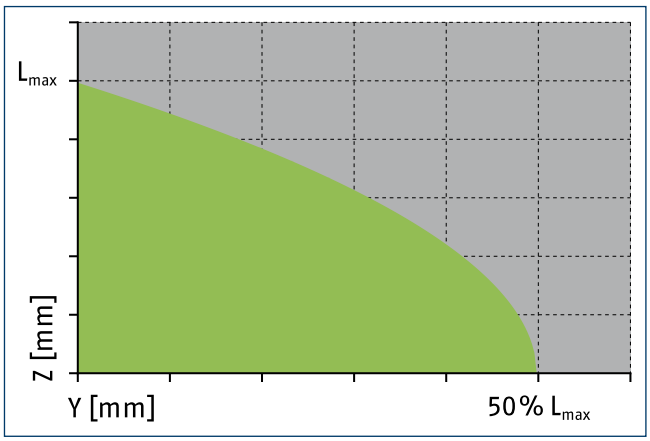

Permitted range

Inadmissible range

L_{max} is equivalent to the maximum permitted finger length, see the chart of technical specifications.

Hose-free direct connection M5

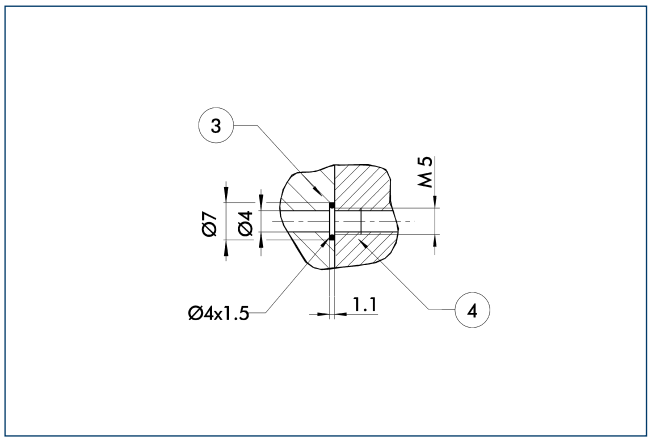

3 Adapter 4 Gripper

The direct connection is used for supplying compressed air without hoses. Instead, the pressure medium is fed through bore-holes in the mounting plate.

Gripping force maintenance device

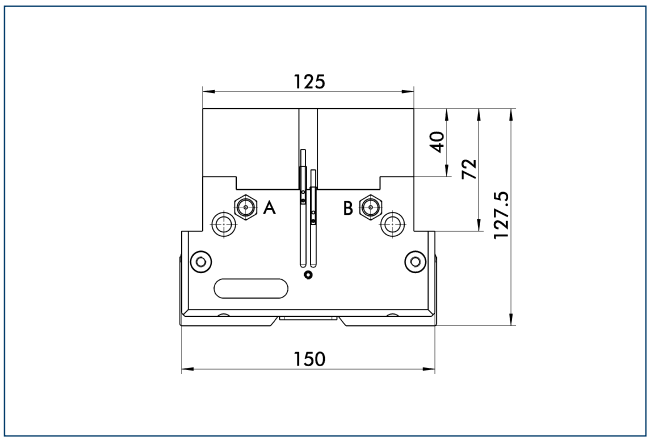

The mechanical gripping force maintenance device ensures a minimum gripping force even in case of pressure drop. This acts as closing force in the AS version. In addition, the gripping force maintenance device can also be used for increasing the gripping force or for single-acting gripping.

Shaft support

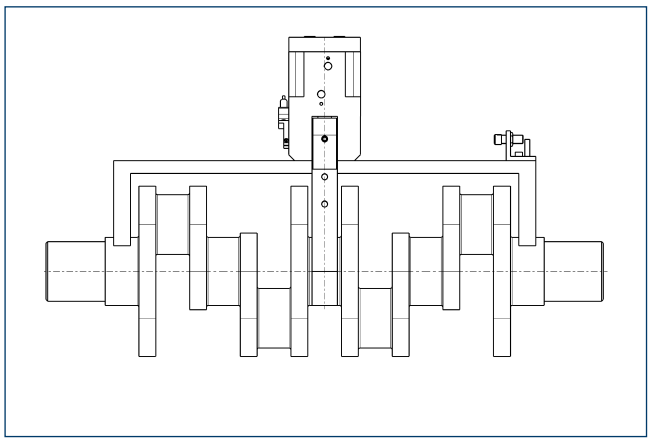

The complete assembly group for handling of crank or cam shaft can be supplied on request.

Force intensified version

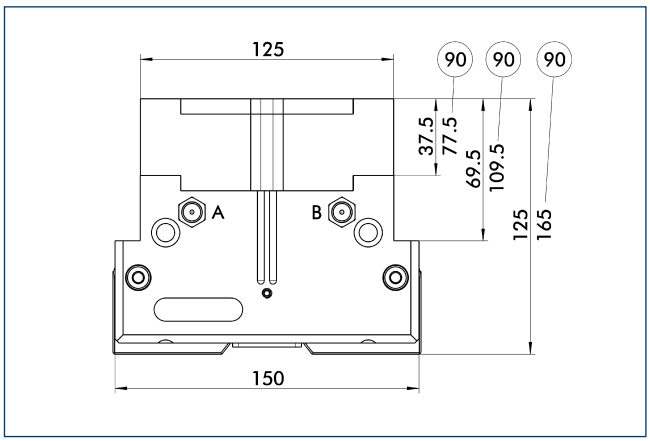

90 For AS version

The KVZ power booster cylinder increases gripping forces for opening and closing. A second piston connected in a series increases the force on the diagonal pull for this purpose. If applicable, observe the additional installation height for combination with an element for maintenance of gripping force.

Mounting kit for opening angle limitation

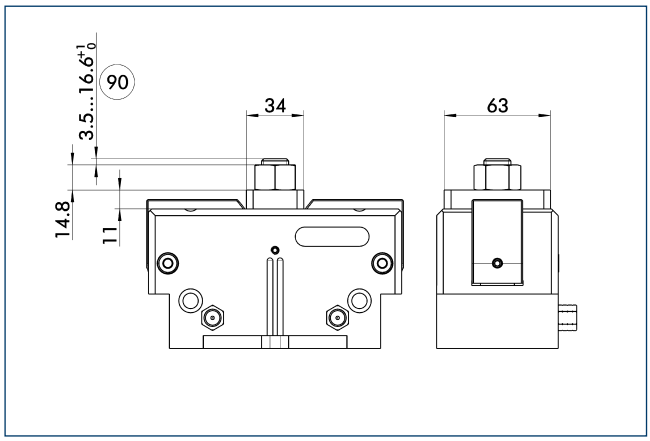

(90) Max. adjustment

Stepless adjustment of the opening angle is possible with a mounting kit.

Description	ID	
Stroke adjustment		
HVE-PWG-plus 160	0311763	

SDV-P pressure maintenance valve

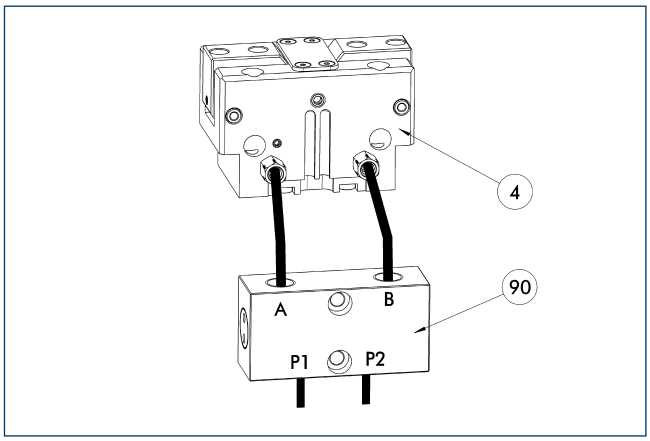

(4) Gripper

(90) SDV-P pressure maintenance valve

The SDV-P pressure maintenance valves ensure that the pressure in the piston chamber of pneumatic gripping, rotary, linear, and quick-change modules is maintained temporarily during an emergency stop.

Description	ID	
Pressure maintenance valve		
SDV-P 04	0403130	

BSWS jaw quick-change systems

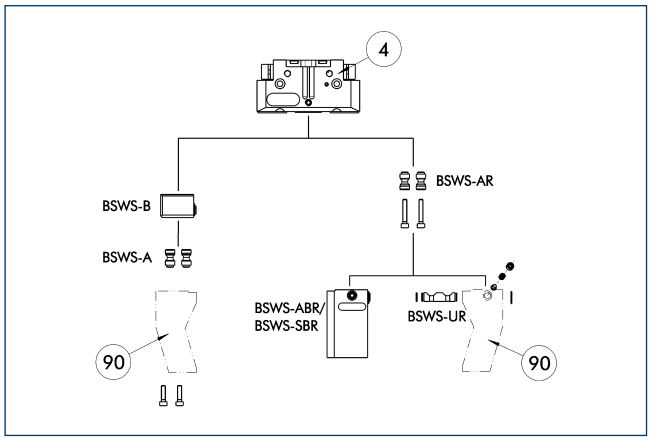

(4) Gripper

(90) Customized gripper fingers

There are various jaw quick-change systems available for the grippers. For detailed information, refer to the appropriate product.

Description	ID	
Jaw quick-change system adapter		
BSWS-AR 160	0300096	
BSWS-A 160	0303030	
Jaw quick-change system base		
BSWS-B 160	0303031	
Finger blanks with jaw quick-change system		
BSWS-ABR-PGZN-plus 160	0300076	
BSWS-SBR-PGZN-plus 160	0300086	
Jaw quick-change system reversed		
BSWS-UR 160	0302995	

ⓘ Only the systems listed in the table can be used.

ZBA L-plus 160 intermediate jaws

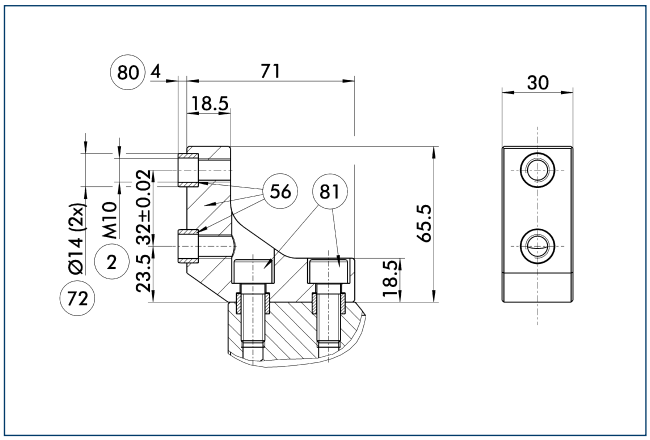

(2) Finger connection
(56) Included in delivery
(72) Fit for centering sleeves
(80) Depth of the centering sleeve hole in the mating part
(81) Not included in the scope of delivery

Optionally intermediate jaws can be used, enabling direct connection and alignment of top jaws and various standard accessories in Z-direction.

Description	ID	Material	Scope of delivery
Intermediate jaws			
ZBA-L-plus 160	0311762	Aluminum	1

FMS-ZBA / ZBP 160 force-measuring jaws

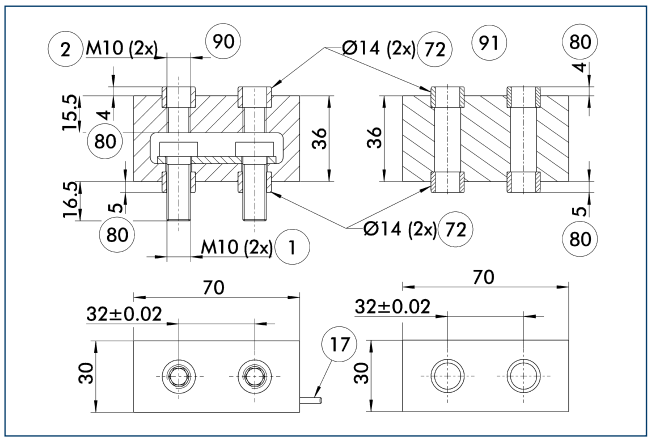

1 Gripper connection
2 Finger connection
17 Cable outlet
72 Fit for centering sleeves
80 Depth of the centering sleeve hole in the mating part
90 Active intermediate jaws
91 Passive intermediate jaws

Force measuring jaws measure gripping forces, but can also determine workpiece weights or dimensional deviations. There are active and passive intermediate jaws (FMS-ZBA or FMS-ZBP). At least one active force measuring jaw is required per gripper, the rest can be passive. For each active jaw, a FMS-A control unit and a FMS-AK connection cable are required.

Description	ID	Often combined
Active intermediate jaws		
FMS-ZBA 160	0301840	
Passive intermediate jaws		
FMS-ZBP 160	0301841	
Connection cables		
FMS-AK0200	0301820	●
FMS-AK0500	0301821	
FMS-AK1000	0301822	
FMS-AK2000	0301823	
Electronic processor		
FMS-A2	0301811	

ABR- / SBR-PGZN-plus 160 finger blanks

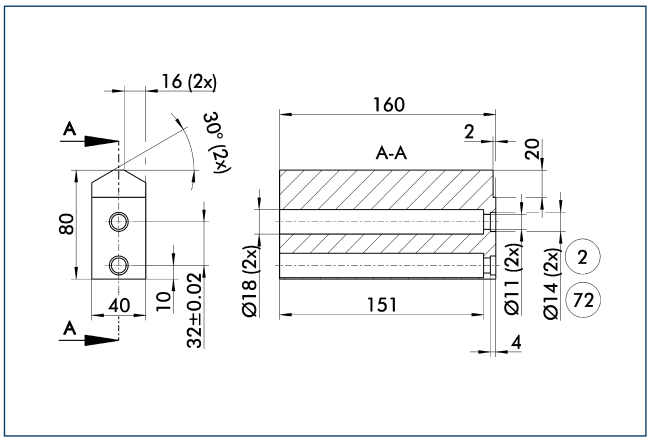

2 Finger connection
72 Fit for centering sleeves

Finger blanks for customized subsequent machining.

Description	ID	Material	Scope of delivery
Finger blanks			
ABR-PGZN-plus 160	0300014	Aluminum	1
SBR-PGZN-plus 160	0300024	16MnCr5	1

Attachment valves

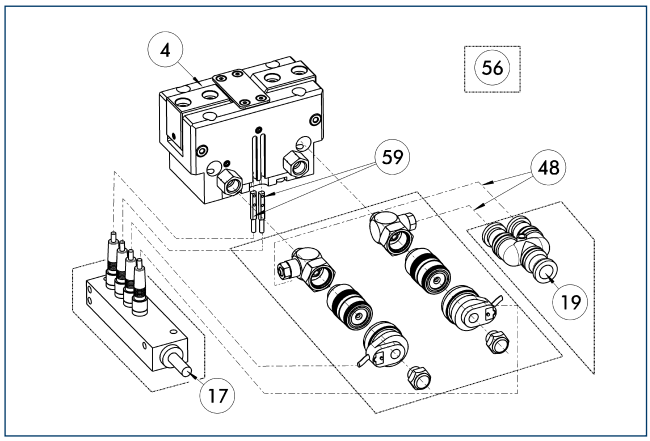

4 Gripper
17 Cable outlet
19 Air connection
48 Hose
56 Included in delivery
59 Monitoring gripping

For each unit one attachment valve ABV is required, optional with distributor for sensors and valves. Attachment valves increase the efficiency, reduce the installation work and air consumption and simplify air supply. For details please refer to the "Accessories" catalog section.

Description	ID	Often combined
Attachment valves		
ABV-MV30-G1/8	0303328	
ABV-MV30-G1/8-V2-M8	0303396	
ABV-MV30-G1/8-V4-M8	0303366	●
ABV-MV30-G1/8-V8-M8	0303367	

Mounting kit for IN 40 proximity switches

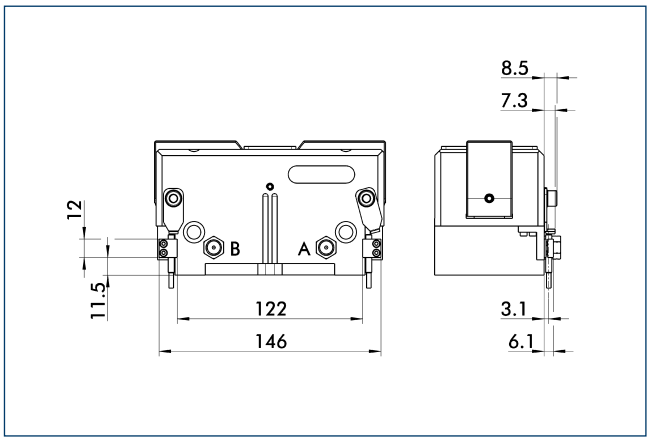

Limit position monitor can be mounted with mounting kit.

Description	ID	
Mounting kit for proximity switch		
AS-IN40-PWG-plus 160	0311760	

ⓘ This mounting kit needs to be ordered optionally as an accessory.

IN 40 inductive proximity switches

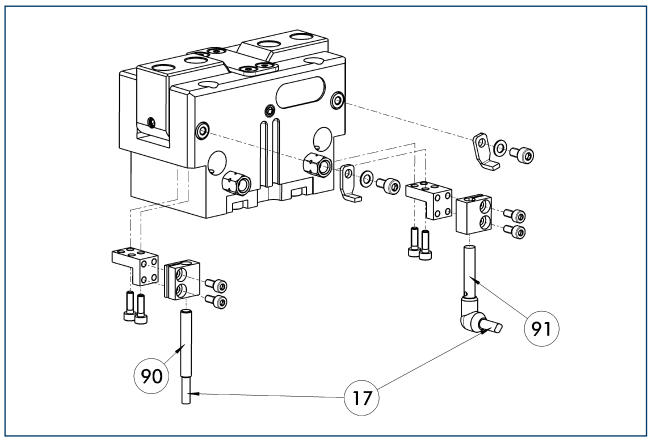

(17) Cable outlet
(91) IN ...-SA sensor
(90) IN ... sensor

Limit position monitor can be mounted with mounting kit.

Description	ID	Often combined
Mounting kit for proximity switch		
AS-IN40-PWG-plus 160	0311760	
Inductive proximity switches		
IN 40-S-M12	0301574	
IN 40-S-M8	0301474	●
INK 40-S	0301555	
Inductive proximity switches with lateral outlet		
IN 40-S-M12-SA	0301577	
IN 40-S-M8-SA	0301473	●
INK 40-S-SA	0301565	
Cable extensions		
KV BG12-SG12 3P-0030-PNP	0301999	
KV BG12-SG12 3P-0060-PNP	0301998	
KV BW08-SG08 3P-0030-PNP	0301495	
KV BW08-SG08 3P-0100-PNP	0301496	
KV BW08-SG08 3P-0200-PNP	0301497	●
KV BW12-SG12 3P-0030-PNP	0301595	
KV BW12-SG12 3P-0100-PNP	0301596	
KV BW12-SG12 3P-0200-PNP	0301597	
Clip for plug / socket		
CLI-M12	0301464	
CLI-M8	0301463	
Connection cables		
KA BG08-L 3P-0300-PNP	0301622	●
KA BG08-L 3P-0500-PNP	0301623	
KA BG12-L 3P-0500-PNP	30016369	
KA BW08-L 3P-0300-PNP	0301594	
KA BW08-L 3P-0500-PNP	0301502	
KA BW12-L 3P-0300-PNP	0301503	
KA BW12-L 3P-0500-PNP	0301507	
Sensor distributor		
V2-M8	0301775	●
V2-M12	0301776	●

ⓘ Two sensors (closer/S) are required for each unit, plus extension cables as an option. This mounting kit needs to be ordered optionally as an accessory. Please note the minimum permitted bending radii for the sensor cables, which are generally 35 mm.

Mounting kit for IN 80 proximity switches

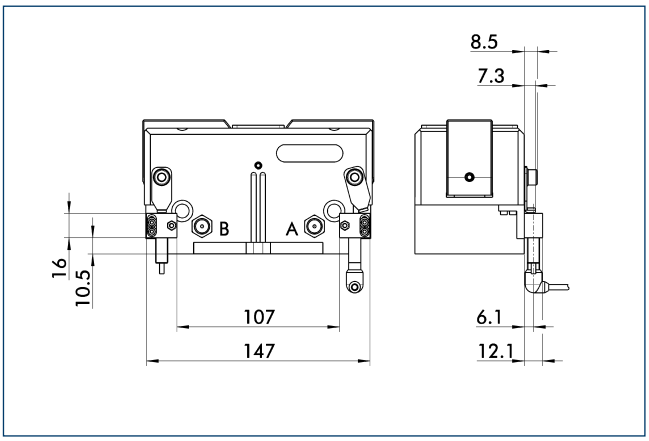

Limit position monitor can be mounted with mounting kit.

Description	ID	
Mounting kit for proximity switch		
AS-IN80-PWG-plus 160	0311761	

ⓘ This mounting kit needs to be ordered optionally as an accessory.

IN 80 inductive proximity switches

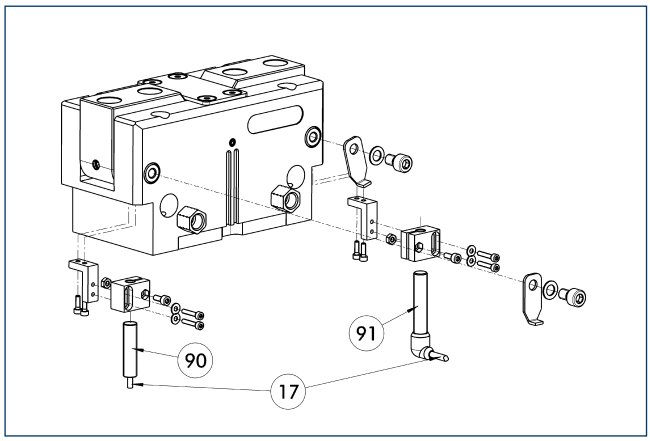

(17) Cable outlet
(91) IN ...-SA sensor
(90) IN ... sensor

Limit position monitor can be mounted with mounting kit.

Description	ID	Often combined
Mounting kit for proximity switch		
AS-IN80-PWG-plus 160	0311761	
Inductive proximity switches		
IN 80-S-M12	0301578	
IN 80-S-M8	0301478	●
IN-C 80-S-M8	0301475	
INK 80-S	0301550	
INK 80-SL	0301579	
Inductive proximity switches with lateral outlet		
IN 80-S-M12-SA	0301587	
IN 80-S-M8-SA	0301483	●
INK 80-S-SA	0301566	
Cable extensions		
KV BG12-SG12 3P-0030-PNP	0301999	
KV BG12-SG12 3P-0060-PNP	0301998	
KV BW08-SG08 3P-0030-PNP	0301495	
KV BW08-SG08 3P-0100-PNP	0301496	
KV BW08-SG08 3P-0200-PNP	0301497	●
KV BW12-SG12 3P-0030-PNP	0301595	
KV BW12-SG12 3P-0100-PNP	0301596	
KV BW12-SG12 3P-0200-PNP	0301597	
Clip for plug / socket		
CLI-M12	0301464	
CLI-M8	0301463	
Connection cables		
KA BG08-L 3P-0300-PNP	0301622	●
KA BG08-L 3P-0500-PNP	0301623	
KA BG12-L 3P-0500-PNP	30016369	
KA BW08-L 3P-0300-PNP	0301594	
KA BW08-L 3P-0500-PNP	0301502	
KA BW12-L 3P-0300-PNP	0301503	
KA BW12-L 3P-0500-PNP	0301507	
Sensor distributor		
V2-M12	0301776	●
V2-M8	0301775	●

ⓘ Two sensors (closer/S) are required for each unit, plus extension cables as an option. This mounting kit needs to be ordered optionally as an accessory. Please note the minimum permitted bending radii for the sensor cables, which are generally 35 mm.

MMS electronic magnetic switches

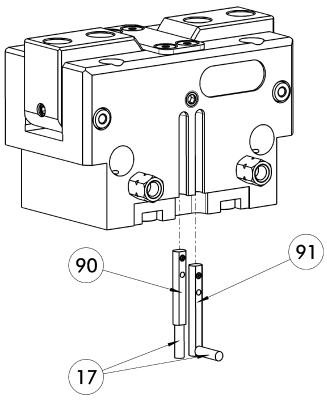

(17) Cable outlet
(91) MMS 22...-SA sensor
(90) MMS 22... sensor

End position monitoring for mounting in the C-slot.

Description	ID	Often combined
MMS electronic magnetic switches		
MMS 22-S-M8-PNP	0301032	●
MMSK 22-S-PNP	0301034	
MMS electronic magnetic switches with lateral cable outlet		
MMS 22-S-M8-PNP-SA	0301042	●
MMSK 22-S-PNP-SA	0301044	
Cable extensions		
KV BW08-SG08 3P-0030-PNP	0301495	
KV BW08-SG08 3P-0100-PNP	0301496	
KV BW08-SG08 3P-0200-PNP	0301497	●
Clip for plug / socket		
CLI-M8	0301463	
Connection cables		
KA BG08-L 3P-0300-PNP	0301622	●
KA BG08-L 3P-0500-PNP	0301623	
KA BW08-L 3P-0300-PNP	0301594	
KA BW08-L 3P-0500-PNP	0301502	
Sensor distributor		
V2-M8	0301775	●
V4-M8	0301746	
V8-M8	0301751	

ⓘ Two sensors (closer/S) are required for each unit, plus extension cables as an option. Please note the minimum permitted bending radii for the sensor cables, which are generally 35 mm.

MMS PI1 programmable magnetic switches

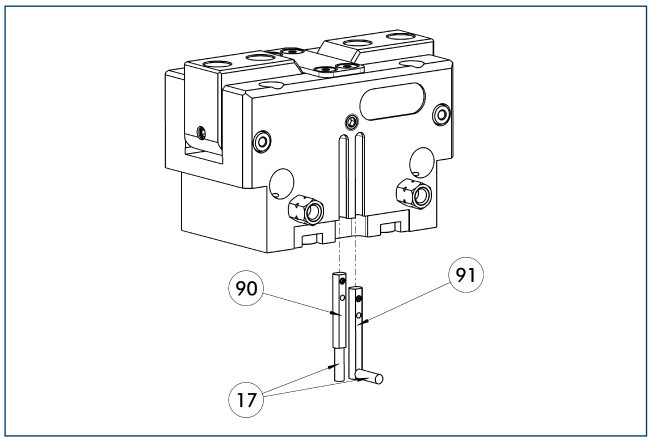

(17) Cable outlet
(91) MMS 22...-PI1-...-SA sensor
(90) MMS 22...-PI1-... sensor

Position query with one programmable position per sensor and electronics integrated in sensor. Programmable via MT magnet teaching tool (included in the scope of delivery) or ST plug teaching tool (optional). Limit position query mounted in C-groove. If the ST plug teaching tools are listed in the table, teaching can only take place with the ST plug teaching tools.

Description	ID	Often combined
MMS PI1 programmable magnetic switches		
MMS 22-PI1-S-M8-PNP	0301160	●
MMSK 22-PI1-S-PNP	0301162	
MMS PI1-HD programmable magnetic switches with stainless steel housing		
MMS 22-PI1-S-M8-PNP-HD	0301110	●
MMSK 22-PI1-S-PNP-HD	0301112	
MMS PI1 programmable magnetic switches with lateral cable outlet		
MMS 22-PI1-S-M8-PNP-SA	0301166	●
MMSK 22-PI1-S-PNP-SA	0301168	

ⓘ Two sensors (closer/S) are required for each unit, plus extension cables as an option. Please note the minimum permitted bending radii for the sensor cables, which are generally 35 mm. Connection cable, cable extensions, and sensor distributors can be found in the table for the MMS 22.

MMS PI2 programmable magnetic switches

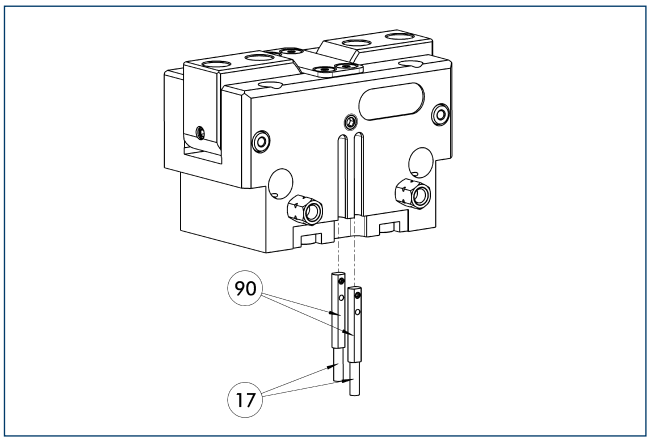

(17) Cable outlet
(90) MMS 22...-PI2-... sensor

Position query with two programmable positions per sensor and electronics integrated in sensor. Programmable via MT magnet teaching tool (included in the scope of delivery) or ST plug teaching tool (optional). Limit position query mounted in C-groove. If the ST plug teaching tools are listed in the table, teaching can only take place with the ST plug teaching tools.

Description	ID	Often combined
MMS PI2 programmable magnetic switches		
MMS 22-PI2-S-M8-PNP	0301180	●
MMSK 22-PI2-S-PNP	0301182	
MMS PI2-HD programmable magnetic switches with stainless steel housing		
MMS 22-PI2-S-M8-PNP-HD	0301130	●
MMSK 22-PI2-S-PNP-HD	0301132	

ⓘ Per unit one sensor (closer/S) is required, optionally a cable extension. Please note the minimum permitted bending radii for the sensor cables, which are generally 35 mm. Connection cable, cable extensions, and sensor distributors can be found in the table for the MMS-P 22.

MMS-P programmable magnetic switches

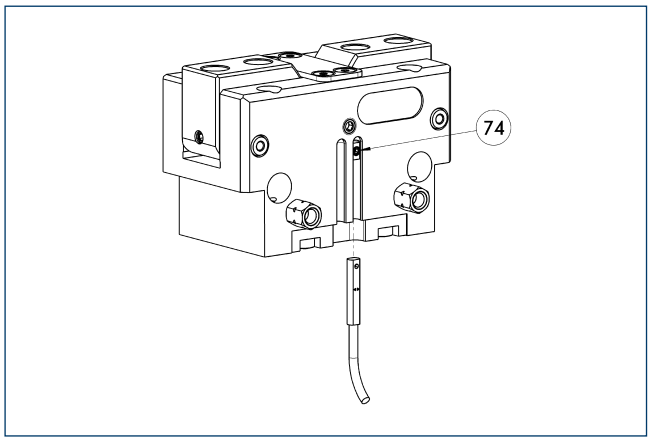

74 Stop for MMS-P

Position monitoring with two programmable positions per sensor. The end position monitoring is mounted in the C-slot.

Description	ID	Often combined
MMS-P programmable magnetic switches		
MMSK-P 22-S-PNP	0301371	
MMS-P 22-S-M8-PNP	0301370	●
Clip for plug / socket		
CLI-M8	0301463	
Connection cables		
KA BG08-L 4P-0500	0307767	●
KA BG08-L 4P-1000	0307768	
KA BW08-L 4P-0500	0307765	
KA BW08-L 4P-1000	0307766	
Sensor distributor		
V2-M8-4P-2XM8-3P	0301380	

ⓘ Per unit one sensor (closer/S) is required, optionally a cable extension. Please note the minimum permitted bending radii for the sensor cables, which are generally 35 mm.

PWG-plus 200

SCHUNK Grippers pneumatic | 2-Finger Angular Grippers | Universal Gripper

Gripping force, O.D. gripping

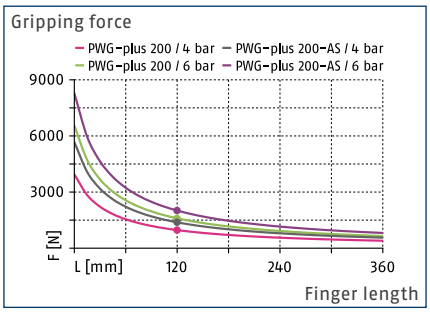

Closing moment curve

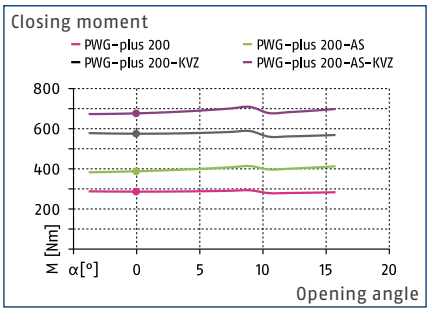

Forces and moments

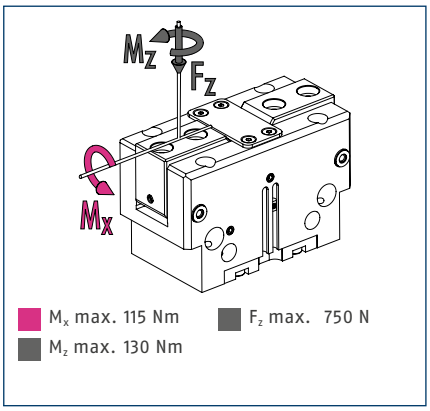

ⓘ The indicated moments and forces are statical values, apply for each base jaw and should not appear simultaneously. If the max. permitted finger weight is exceeded, it is impreative to throttle the air supply so that the jaw movement occurs without any hitting or bouncing. Service life may be reduced.

Technical data

Description		PWG-plus 200	PWG-plus 200-AS
ID		0311670	0311671
Opening angle per jaw	[°]	15	15
Closed angle per jaw up to	[°]	3	3
Closing moment	[Nm]	250	316
Spring-actuated closing moment	[Nm]		66
Weight	[kg]	4.9	7
Recommended workpiece weight	[kg]	8.06	8.06
Fluid consumption per double stroke	[cm³]	338	442
min. / max. operating pressure	[bar]	2/8	4/6.5
Nominal operating pressure	[bar]	6	6
Closing- / opening time	[s]	0.32/0.25	0.2/0.32
max. permitted finger length	[mm]	240	240
max. mass moment of inertia per jaw*	[kgcm²]	1228.1	1228.1
IP class		30	30
min. / max. ambient temperature	[°C]	5/90	5/90
Repeat accuracy	[mm]	0.02	0.02
Options and their characteristics			
High-temperature version		39311670	39311671
min. / max. ambient temperature	[°C]	5/130	5/130

*The unit can be actuated without an external customized throttling at the given value of max. mass moment of inertia per jaw. In case of higher mass moments of inertia, an additional throttling is possible.
The specified closing moment is obtained at an opening angle of 0°. Closing moments for further angles can be read from the following diagram, closing moment to opening angle.
The full gripping force according to the data table is only realised after around 100 gripping cycles.

Main view

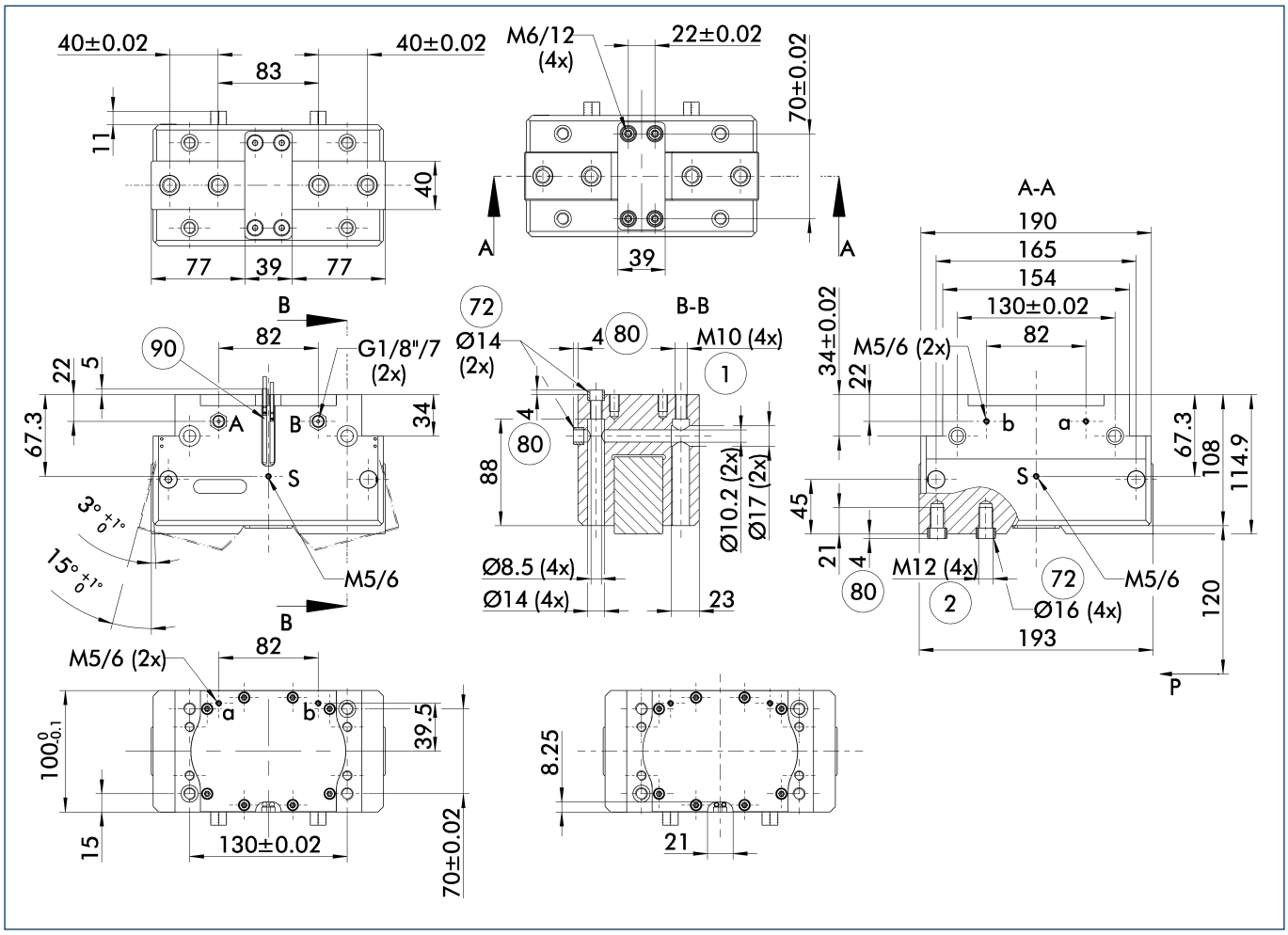

The drawing shows the gripper in the basic version with closed jaws, without dimensional consideration of the options described below.

ⓘ The SDV-P pressure maintenance valve can also be used for I.D. or O.D. gripping alternatively or in addition to the spring-loaded, mechanical gripping force maintenance device (see catalog section on "Accessories").

A, a Main / direct connection, gripper opening

B, b Main / direct connection, gripper closing

S Air purge connection (0.5 ... 1 bar)

(1) Gripper connection

(2) Finger connection

(72) Fit for centering sleeves

(80) Depth of the centering sleeve hole in the mating part

(90) MMS 22... sensor

Maximum permitted finger projection

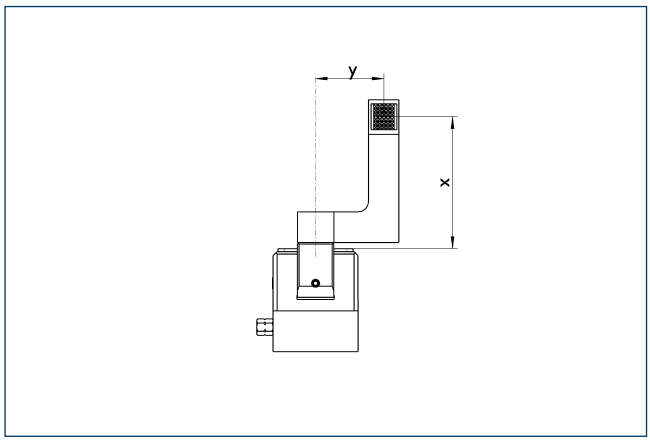

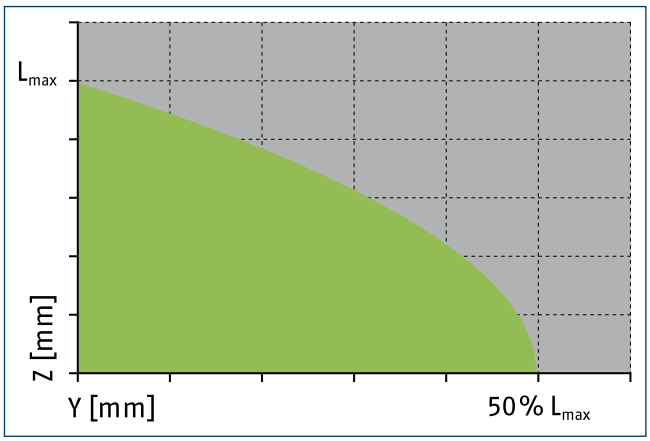

Permitted range

Inadmissible range

L_{max} is equivalent to the maximum permitted finger length, see the chart of technical specifications.

Hose-free direct connection M5

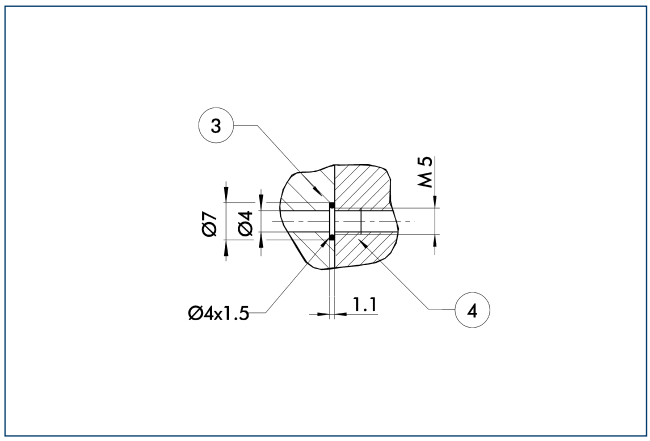

3 Adapter 4 Gripper

The direct connection is used for supplying compressed air without hoses. Instead, the pressure medium is fed through bore-holes in the mounting plate.

Gripping force maintenance device

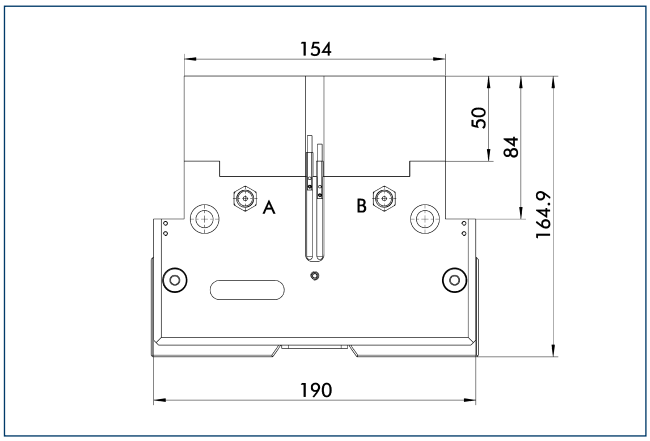

The mechanical gripping force maintenance device ensures a minimum gripping force even in case of pressure drop. This acts as closing force in the AS version. In addition, the gripping force maintenance device can also be used for increasing the gripping force or for single-acting gripping.

Shaft support

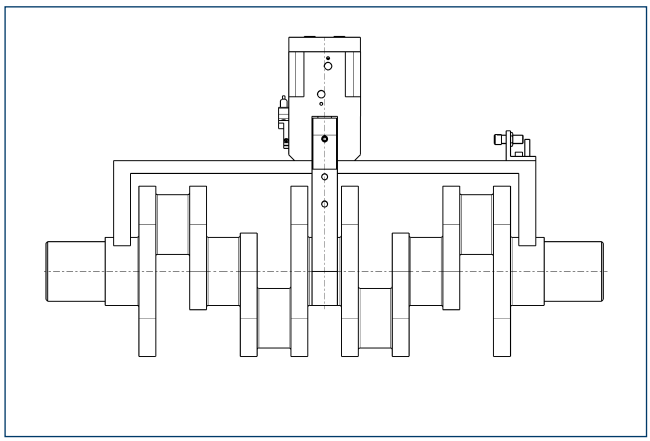

The complete assembly group for handling of crank or cam shaft can be supplied on request.

Mounting kit for opening angle limitation

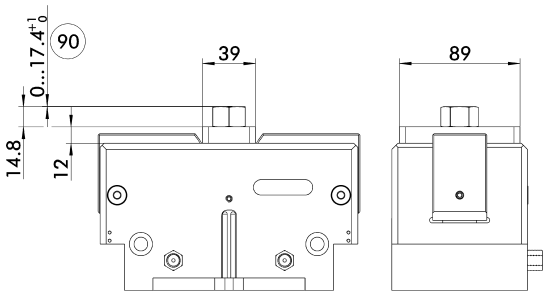

(90) Max. adjustment

Stepless adjustment of the opening angle is possible with a mounting kit.

Description	ID	
Stroke adjustment		
HVE-PWG-plus 200	0311773	

SDV-P pressure maintenance valve

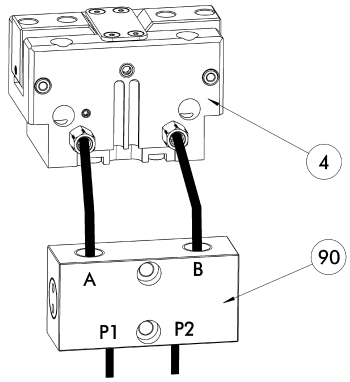

(4) Gripper

(90) SDV-P pressure maintenance valve

The SDV-P pressure maintenance valves ensure that the pressure in the piston chamber of pneumatic gripping, rotary, linear, and quick-change modules is maintained temporarily during an emergency stop.

Description	ID	
Pressure maintenance valve		
SDV-P 07	0403131	

BSWS jaw quick-change systems

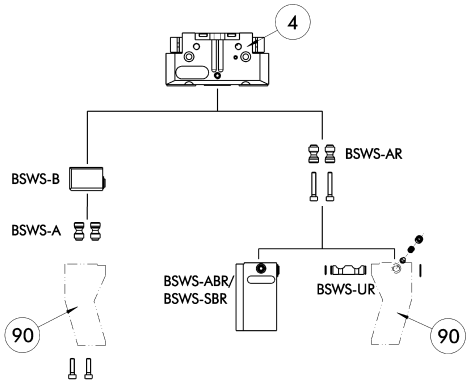

(4) Gripper

(90) Customized gripper fingers

There are various jaw quick-change systems available for the grippers. For detailed information, refer to the appropriate product.

Description	ID	
Jaw quick-change system base		
BSWS-B 200	0303033	
Jaw quick-change system adapter		
BSWS-A 200	0303032	

ⓘ Only the systems listed in the table can be used.

ZBA L-plus 200 intermediate jaws

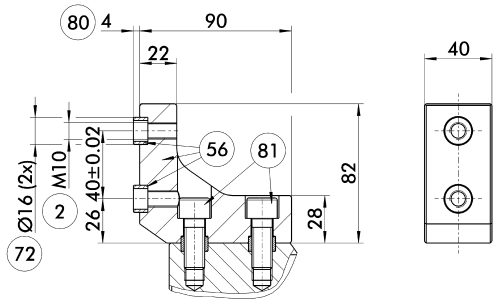

(2) Finger connection

(56) Included in delivery

(72) Fit for centering sleeves

(80) Depth of the centering sleeve hole in the mating part

(81) Not included in the scope of delivery

Optionally intermediate jaws can be used, enabling direct connection and alignment of top jaws and various standard accessories in Z-direction.

Description	ID	Material	Scope of delivery
Intermediate jaws			
ZBA-L-plus 200	0311772	Aluminum	1

FMS-ZBA / ZBP 200 force-measuring jaws

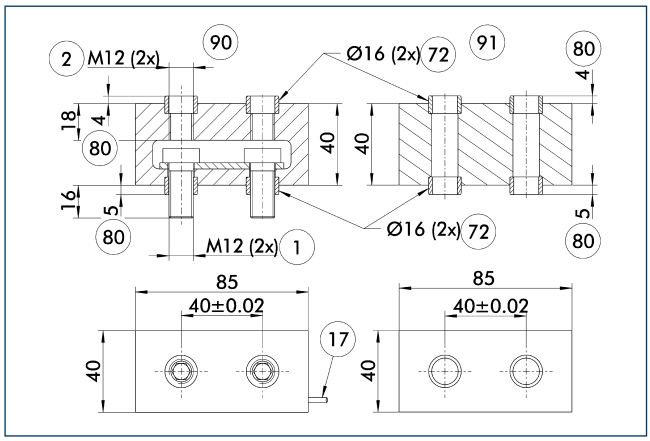

1 Gripper connection
2 Finger connection
17 Cable outlet
72 Fit for centering sleeves
80 Depth of the centering sleeve hole in the mating part
90 Active intermediate jaws
91 Passive intermediate jaws

Force measuring jaws measure gripping forces, but can also determine workpiece weights or dimensional deviations. There are active and passive intermediate jaws (FMS-ZBA or FMS-ZBP). At least one active force measuring jaw is required per gripper, the rest can be passive. For each active jaw, a FMS-A control unit and a FMS-AK connection cable are required.

Description	ID	Often combined
Active intermediate jaws		
FMS-ZBA 200	0301842	
Passive intermediate jaws		
FMS-ZBP 200	0301843	
Connection cables		
FMS-AK0200	0301820	●
FMS-AK0500	0301821	
FMS-AK1000	0301822	
FMS-AK2000	0301823	
Electronic processor		
FMS-A2	0301811	

ABR- / SBR-PGZN-plus 200 finger blanks

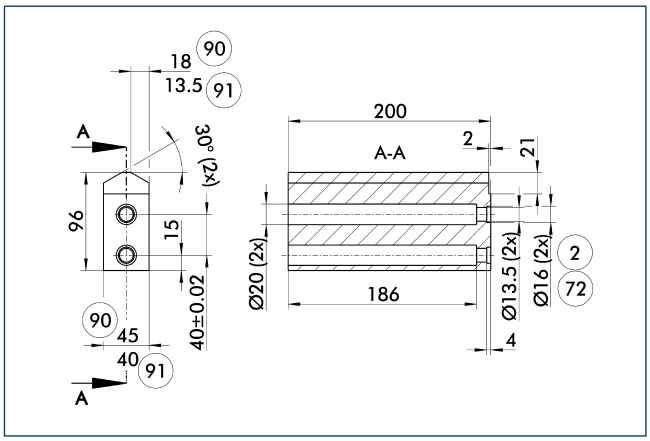

2 Finger connection
72 Fit for centering sleeves
90 ABR-PGZN-plus
91 SBR-PGZN-plus

Finger blanks for customized subsequent machining.

Description	ID	Material	Scope of delivery
Finger blanks			
ABR-PGZN-plus 200	0300015	Aluminum	1
SBR-PGZN-plus 200	0300025	16MnCr5	1

Mounting kit for IN 40 proximity switches

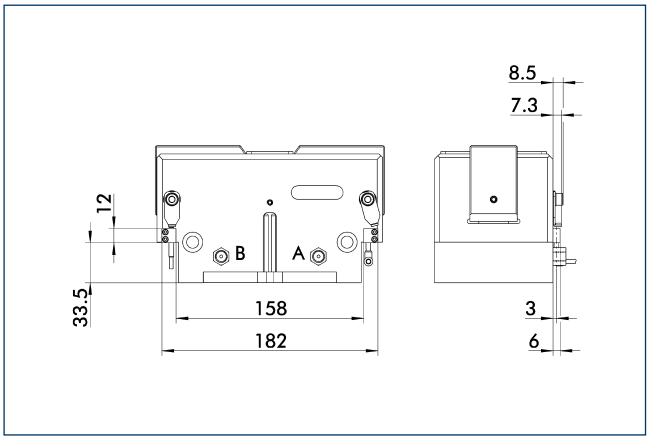

Limit position monitor can be mounted with mounting kit.

Description	ID	
Mounting kit for proximity switch		
AS-IN40-PWG-plus 200	0311770	

ⓘ This mounting kit needs to be ordered optionally as an accessory.

IN 40 inductive proximity switches

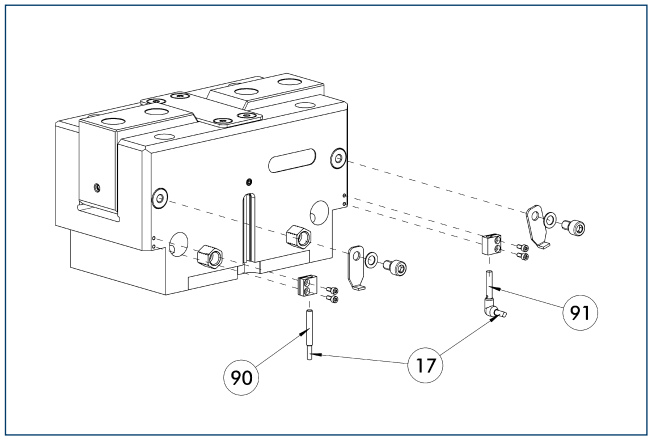

(17) Cable outlet
(91) IN ...-SA sensor
(90) IN ... sensor

Limit position monitor can be mounted with mounting kit.

Description	ID	Often combined
Mounting kit for proximity switch		
AS-IN40-PWG-plus 200	0311770	
Inductive proximity switches		
IN 40-S-M12	0301574	
IN 40-S-M8	0301474	●
INK 40-S	0301555	
Inductive proximity switches with lateral outlet		
IN 40-S-M12-SA	0301577	
IN 40-S-M8-SA	0301473	●
INK 40-S-SA	0301565	
Cable extensions		
KV BG12-SG12 3P-0030-PNP	0301999	
KV BG12-SG12 3P-0060-PNP	0301998	
KV BW08-SG08 3P-0030-PNP	0301495	
KV BW08-SG08 3P-0100-PNP	0301496	
KV BW08-SG08 3P-0200-PNP	0301497	●
KV BW12-SG12 3P-0030-PNP	0301595	
KV BW12-SG12 3P-0100-PNP	0301596	
KV BW12-SG12 3P-0200-PNP	0301597	
Clip for plug / socket		
CLI-M12	0301464	
CLI-M8	0301463	
Connection cables		
KA BG08-L 3P-0300-PNP	0301622	●
KA BG08-L 3P-0500-PNP	0301623	
KA BG12-L 3P-0500-PNP	30016369	
KA BW08-L 3P-0300-PNP	0301594	
KA BW08-L 3P-0500-PNP	0301502	
KA BW12-L 3P-0300-PNP	0301503	
KA BW12-L 3P-0500-PNP	0301507	
Sensor distributor		
V2-M8	0301775	●
V2-M12	0301776	●

ⓘ Two sensors (closer/S) are required for each unit, plus extension cables as an option. This mounting kit needs to be ordered optionally as an accessory. Please note the minimum permitted bending radii for the sensor cables, which are generally 35 mm.

Mounting kit for IN 80 proximity switches

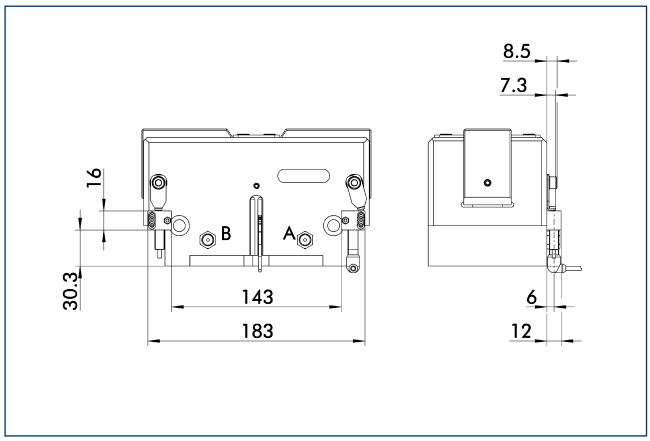

Limit position monitor can be mounted with mounting kit.

Description	ID	
Mounting kit for proximity switch		
AS-IN80-PWG-plus 200	0311771	

ⓘ This mounting kit needs to be ordered optionally as an accessory.

IN 80 inductive proximity switches

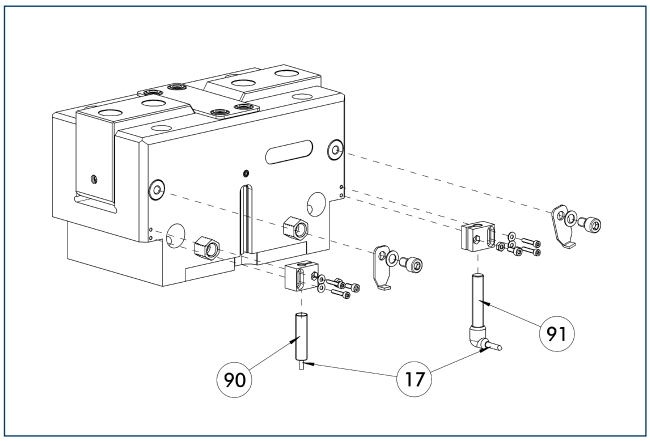

(17) Cable outlet
(91) IN ...-SA sensor
(90) IN ... sensor

Limit position monitor can be mounted with mounting kit.

Description	ID	Often combined
Mounting kit for proximity switch		
AS-IN80-PWG-plus 200	0311771	
Inductive proximity switches		
IN 80-S-M12	0301578	
IN 80-S-M8	0301478	●
IN-C 80-S-M8	0301475	
INK 80-S	0301550	
INK 80-SL	0301579	
Inductive proximity switches with lateral outlet		
IN 80-S-M12-SA	0301587	
IN 80-S-M8-SA	0301483	●
INK 80-S-SA	0301566	
Cable extensions		
KV BG12-SG12 3P-0030-PNP	0301999	
KV BG12-SG12 3P-0060-PNP	0301998	
KV BW08-SG08 3P-0030-PNP	0301495	
KV BW08-SG08 3P-0100-PNP	0301496	
KV BW08-SG08 3P-0200-PNP	0301497	●
KV BW12-SG12 3P-0030-PNP	0301595	
KV BW12-SG12 3P-0100-PNP	0301596	
KV BW12-SG12 3P-0200-PNP	0301597	
Clip for plug / socket		
CLI-M12	0301464	
CLI-M8	0301463	
Connection cables		
KA BG08-L 3P-0300-PNP	0301622	●
KA BG08-L 3P-0500-PNP	0301623	
KA BG12-L 3P-0500-PNP	30016369	
KA BW08-L 3P-0300-PNP	0301594	
KA BW08-L 3P-0500-PNP	0301502	
KA BW12-L 3P-0300-PNP	0301503	
KA BW12-L 3P-0500-PNP	0301507	
Sensor distributor		
V2-M12	0301776	●
V2-M8	0301775	●

ⓘ Two sensors (closer/S) are required for each unit, plus extension cables as an option. This mounting kit needs to be ordered optionally as an accessory. Please note the minimum permitted bending radii for the sensor cables, which are generally 35 mm.

MMS electronic magnetic switches

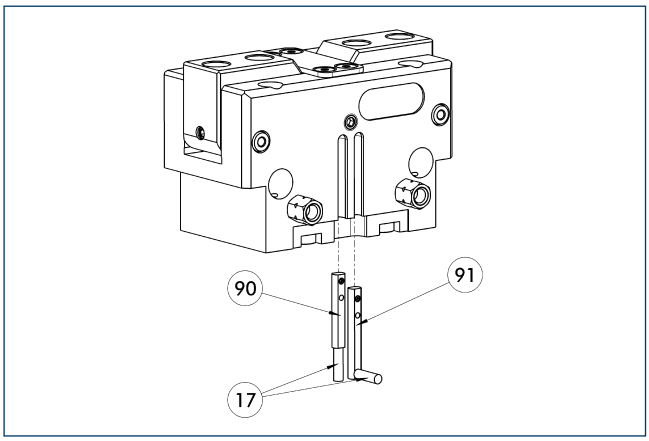

(17) Cable outlet
(91) MMS 22...-SA sensor
(90) MMS 22... sensor

End position monitoring for mounting in the C-slot.

Description	ID	Often combined
MMS electronic magnetic switches		
MMS 22-S-M8-PNP	0301032	●
MMSK 22-S-PNP	0301034	
MMS electronic magnetic switches with lateral cable outlet		
MMS 22-S-M8-PNP-SA	0301042	●
MMSK 22-S-PNP-SA	0301044	
Cable extensions		
KV BW08-SG08 3P-0030-PNP	0301495	
KV BW08-SG08 3P-0100-PNP	0301496	
KV BW08-SG08 3P-0200-PNP	0301497	●
Clip for plug / socket		
CLI-M8	0301463	
Connection cables		
KA BG08-L 3P-0300-PNP	0301622	●
KA BG08-L 3P-0500-PNP	0301623	
KA BW08-L 3P-0300-PNP	0301594	
KA BW08-L 3P-0500-PNP	0301502	
Sensor distributor		
V2-M8	0301775	●
V4-M8	0301746	
V8-M8	0301751	

ⓘ Two sensors (closer/S) are required for each unit, plus extension cables as an option. Please note the minimum permitted bending radii for the sensor cables, which are generally 35 mm.

MMS PI1 programmable magnetic switches

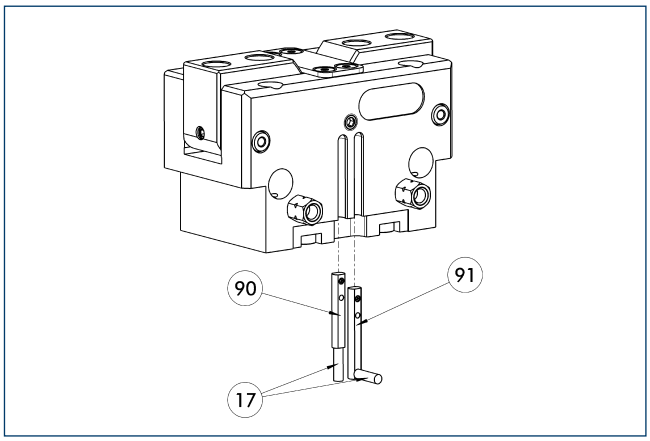

(17) Cable outlet
(91) MMS 22...-PI1-...-SA sensor
(90) MMS 22...-PI1-... sensor

Position query with one programmable position per sensor and electronics integrated in sensor. Programmable via MT magnet teaching tool (included in the scope of delivery) or ST plug teaching tool (optional). Limit position query mounted in C-groove. If the ST plug teaching tools are listed in the table, teaching can only take place with the ST plug teaching tools.

Description	ID	Often combined
MMS PI1 programmable magnetic switches		
MMS 22-PI1-S-M8-PNP	0301160	●
MMSK 22-PI1-S-PNP	0301162	
MMS PI1-HD programmable magnetic switches with stainless steel housing		
MMS 22-PI1-S-M8-PNP-HD	0301110	●
MMSK 22-PI1-S-PNP-HD	0301112	
MMS PI1 programmable magnetic switches with lateral cable outlet		
MMS 22-PI1-S-M8-PNP-SA	0301166	●
MMSK 22-PI1-S-PNP-SA	0301168	

ⓘ Two sensors (closer/S) are required for each unit, plus extension cables as an option. Please note the minimum permitted bending radii for the sensor cables, which are generally 35 mm. Connection cable, cable extensions, and sensor distributors can be found in the table for the MMS 22.

MMS PI2 programmable magnetic switches

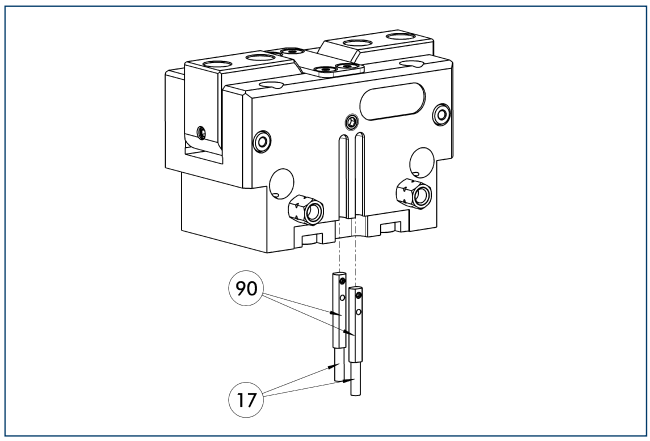

17 Cable outlet

90 MMS 22...-PI2-... sensor

Position query with two programmable positions per sensor and electronics integrated in sensor. Programmable via MT magnet teaching tool (included in the scope of delivery) or ST plug teaching tool (optional). Limit position query mounted in C-groove. If the ST plug teaching tools are listed in the table, teaching can only take place with the ST plug teaching tools.

Description	ID	Often combined
MMS PI2 programmable magnetic switches		
MMS 22-PI2-S-M8-PNP	0301180	●
MMSK 22-PI2-S-PNP	0301182	
MMS PI2-HD programmable magnetic switches with stainless steel housing		
MMS 22-PI2-S-M8-PNP-HD	0301130	●
MMSK 22-PI2-S-PNP-HD	0301132	

ⓘ Per unit one sensor (closer/S) is required, optionally a cable extension. Please note the minimum permitted bending radii for the sensor cables, which are generally 35 mm. Connection cable, cable extensions, and sensor distributors can be found in the table for the MMS-P 22.

MMS-P programmable magnetic switches

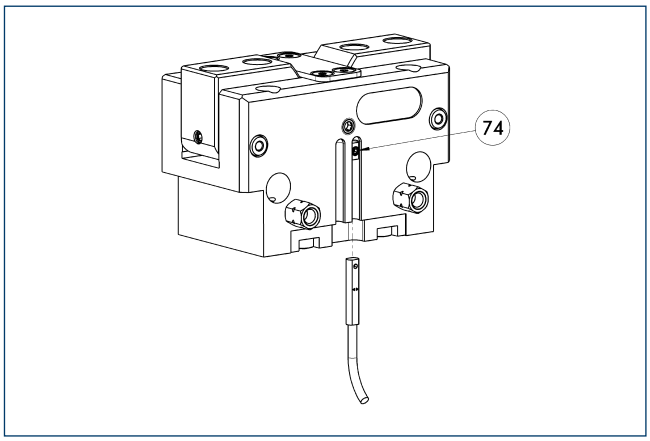

74 Stop for MMS-P

Position monitoring with two programmable positions per sensor. The end position monitoring is mounted in the C-slot.

Description	ID	Often combined
MMS-P programmable magnetic switches		
MMSK-P 22-S-PNP	0301371	
MMS-P 22-S-M8-PNP	0301370	●
Clip for plug / socket		
CLI-M8	0301463	
Connection cables		
KA BG08-L 4P-0500	0307767	●
KA BG08-L 4P-1000	0307768	
KA BW08-L 4P-0500	0307765	
KA BW08-L 4P-1000	0307766	
Sensor distributor		
V2-M8-4P-2XM8-3P	0301380	

ⓘ Per unit one sensor (closer/S) is required, optionally a cable extension. Please note the minimum permitted bending radii for the sensor cables, which are generally 35 mm.

PWG-plus 240

SCHUNK Grippers pneumatic | 2-Finger Angular Grippers | Universal Gripper

Gripping force, O.D. gripping

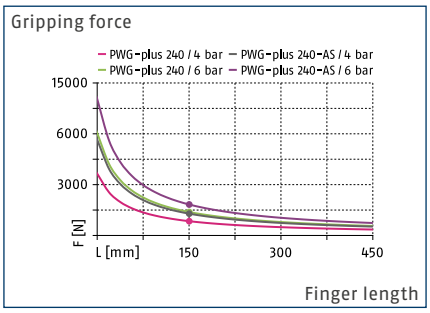

Closing moment curve

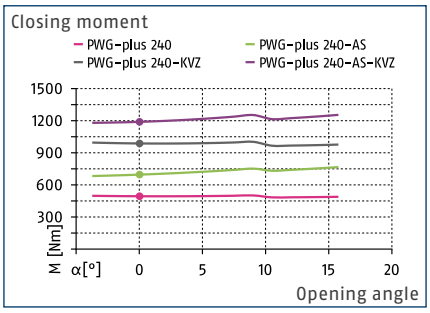

Forces and moments

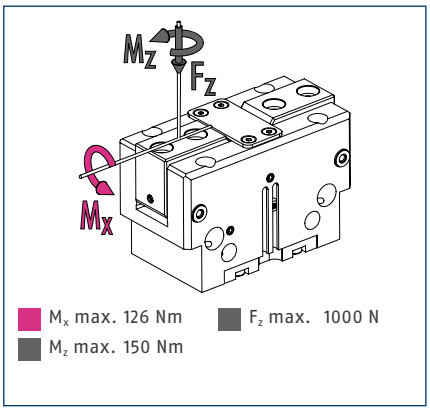

ⓘ The indicated moments and forces are statical values, apply for each base jaw and should not appear simultaneously. If the max. permitted finger weight is exceeded, it is impreative to throttle the air supply so that the jaw movement occurs without any hitting or bouncing. Service life may be reduced.

Technical data

Description		PWG-plus 240	PWG-plus 240-AS
ID		0311680	0311681
Opening angle per jaw	[°]	15	15
Closed angle per jaw up to	[°]	3	3
Closing moment	[Nm]	440	585
Spring-actuated closing moment	[Nm]		145
Weight	[kg]	7.8	11.3
Recommended workpiece weight	[kg]	11.57	11.57
Fluid consumption per double stroke	[cm³]	556	726
min. / max. operating pressure	[bar]	2/8	4/6.5
Nominal operating pressure	[bar]	6	6
Closing- / opening time	[s]	0.32/0.25	0.25/0.46
max. permitted finger length	[mm]	300	300
max. mass moment of inertia per jaw*	[kgcm²]	3113.3	3113.3
IP class		30	30
min. / max. ambient temperature	[°C]	5/90	5/90
Repeat accuracy	[mm]	0.02	0.02
Options and their characteristics			
High-temperature version		39311680	39311681
min. / max. ambient temperature	[°C]	5/130	5/130

*The unit can be actuated without an external customized throttling at the given value of max. mass moment of inertia per jaw. In case of higher mass moments of inertia, an additional throttling is possible.
The specified closing moment is obtained at an opening angle of 0°. Closing moments for further angles can be read from the following diagram, closing moment to opening angle.
The full gripping force according to the data table is only realised after around 100 gripping cycles.

Main view

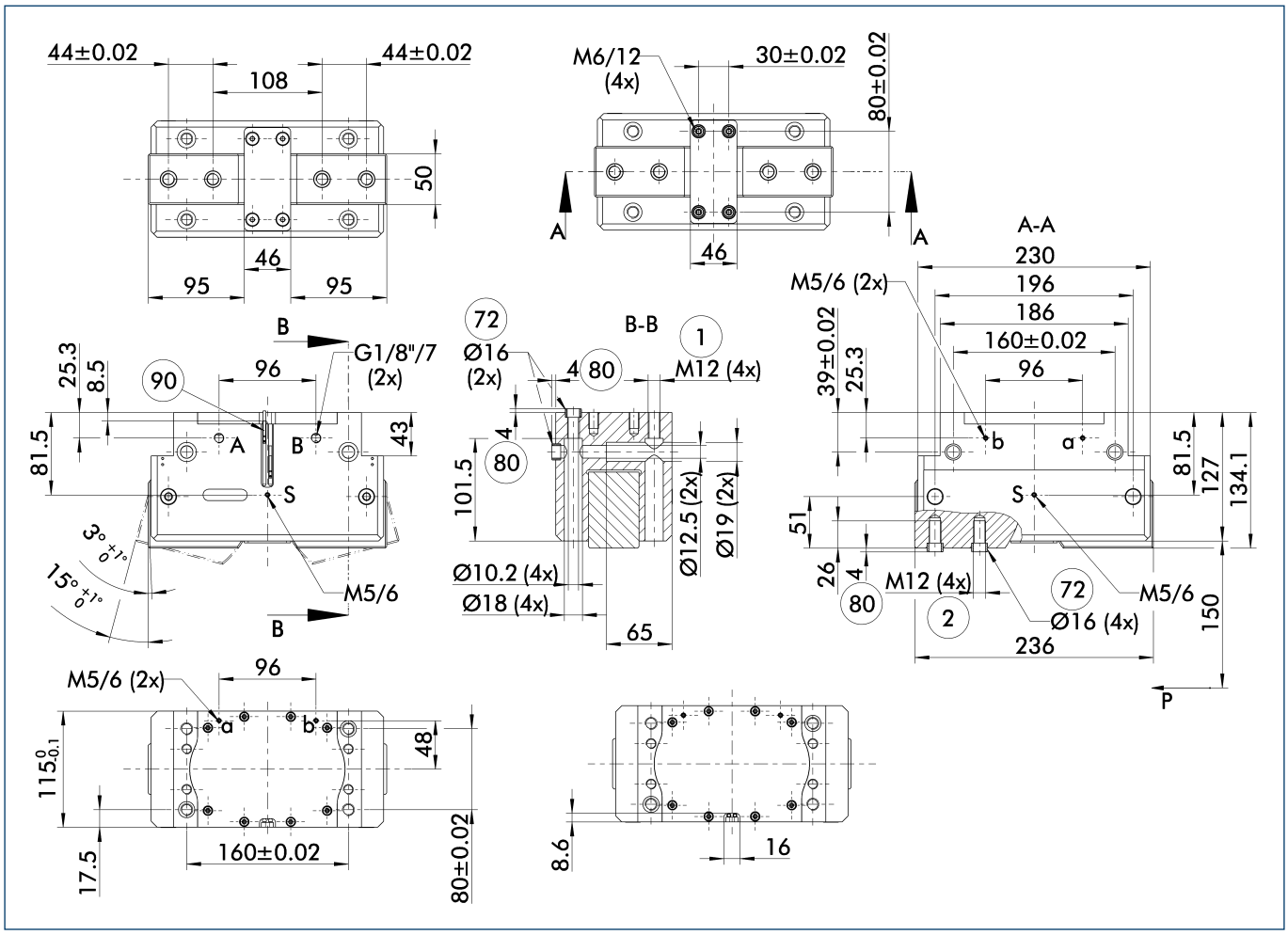

The drawing shows the gripper in the basic version with closed jaws, without dimensional consideration of the options described below.

ⓘ The SDV-P pressure maintenance valve can also be used for I.D. or O.D. gripping alternatively or in addition to the spring-loaded, mechanical gripping force maintenance device (see catalog section on "Accessories").

A, a Main / direct connection, gripper opening

B, b Main / direct connection, gripper closing

S Air purge connection (0.5 ... 1 bar)

(1) Gripper connection

(2) Finger connection

(72) Fit for centering sleeves

(80) Depth of the centering sleeve hole in the mating part

(90) MMS 22... sensor

Maximum permitted finger projection

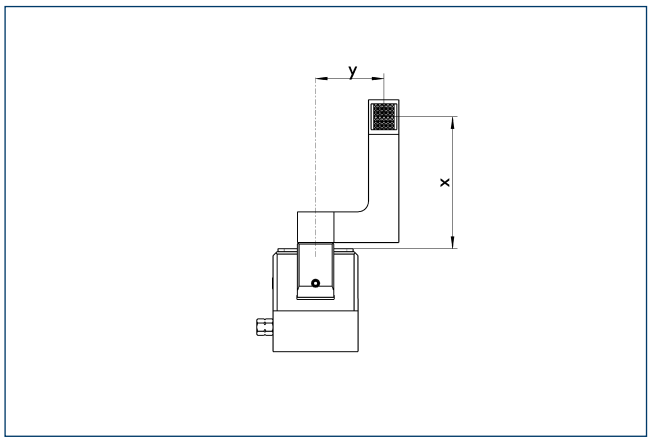

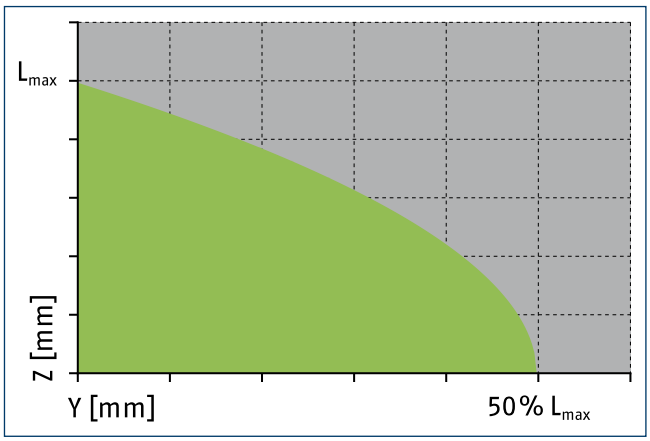

Permitted range

Inadmissible range

L_{max} is equivalent to the maximum permitted finger length, see the chart of technical specifications.

Hose-free direct connection M5

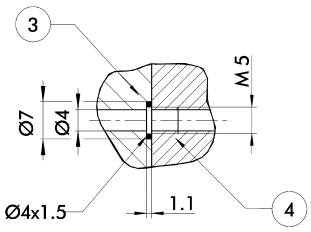

(3) Adapter (4) Gripper

The direct connection is used for supplying compressed air without hoses. Instead, the pressure medium is fed through bore-holes in the mounting plate.

Gripping force maintenance device

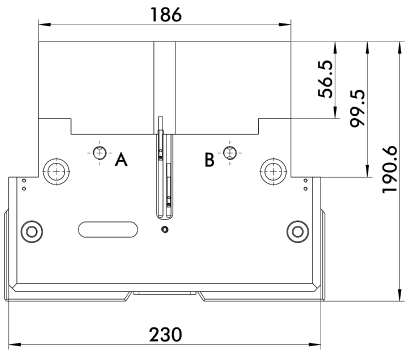

The mechanical gripping force maintenance device ensures a minimum gripping force even in case of pressure drop. This acts as closing force in the AS version. In addition, the gripping force maintenance device can also be used for increasing the gripping force or for single-acting gripping.

Shaft support

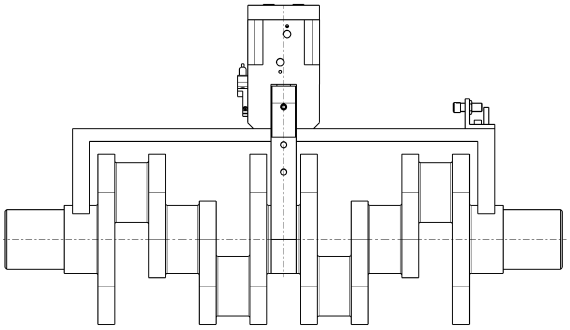

The complete assembly group for handling of crank or cam shaft can be supplied on request.

Mounting kit for opening angle limitation

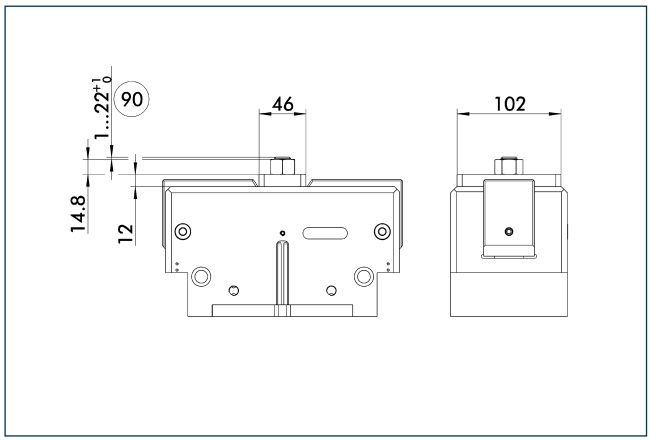

(90) Max. adjustment

Stepless adjustment of the opening angle is possible with a mounting kit.

Description	ID	
Stroke adjustment		
HVE-PWG-plus 240	0311783	

SDV-P pressure maintenance valve

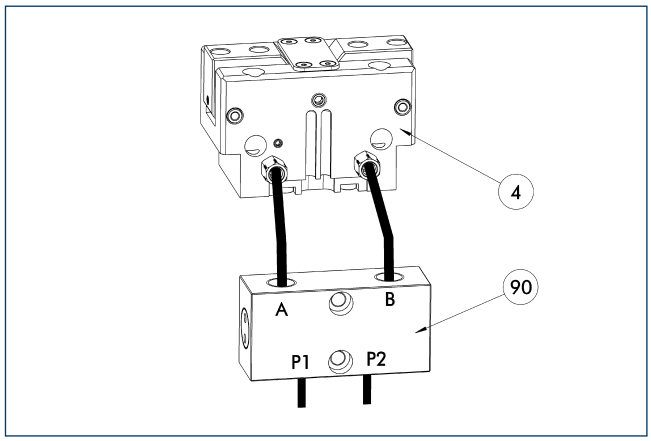

(4) Gripper

(90) SDV-P pressure maintenance valve

The SDV-P pressure maintenance valves ensure that the pressure in the piston chamber of pneumatic gripping, rotary, linear, and quick-change modules is maintained temporarily during an emergency stop.

Description	ID	
Pressure maintenance valve		
SDV-P 07	0403131	

BSWS jaw quick-change systems

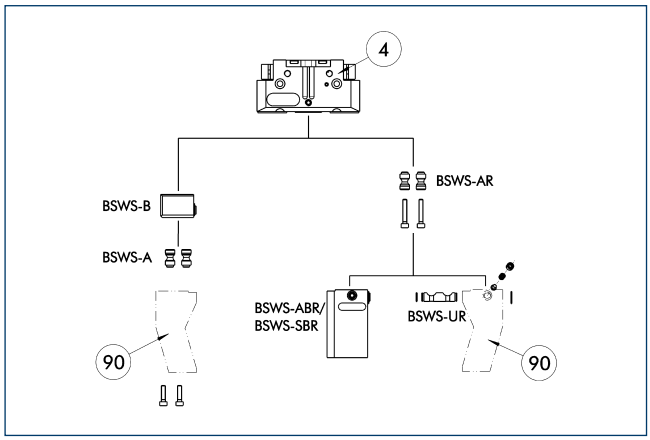

(4) Gripper

(90) Customized gripper fingers

There are various jaw quick-change systems available for the grippers. For detailed information, refer to the appropriate product.

Description	ID	
Jaw quick-change system base		
BSWS-B 240	0303035	
Jaw quick-change system adapter		
BSWS-A 240	0303034	

ⓘ Only the systems listed in the table can be used.

ZBA L-plus 240 intermediate jaws

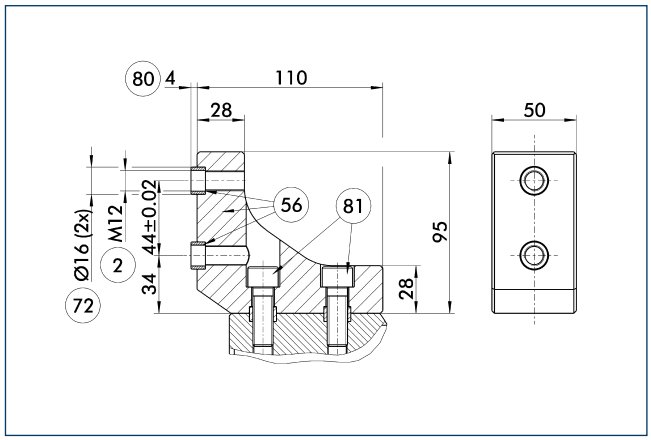

(2) Finger connection

(56) Included in delivery

(72) Fit for centering sleeves

(80) Depth of the centering sleeve hole in the mating part

(81) Not included in the scope of delivery

Optionally intermediate jaws can be used, enabling direct connection and alignment of top jaws and various standard accessories in Z-direction.

Description	ID	Material	Scope of delivery
Intermediate jaws			
ZBA-L-plus 240	0311782	Aluminum	1

ABR- / SBR-PGZN-plus 240 finger blanks

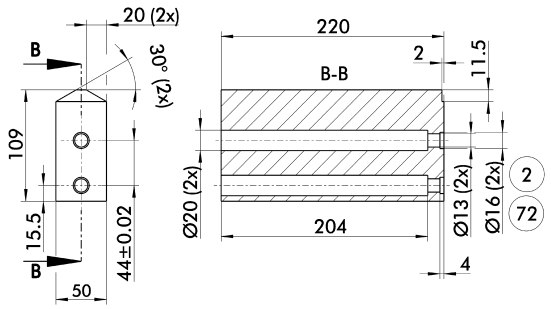

(2) Finger connection (72) Fit for centering sleeves

Finger blanks for customized subsequent machining.

Description	ID	Material	Scope of delivery
Finger blanks			
ABR-PGZN-plus 240	0300017	Aluminum	1
SBR-PGZN-plus 240	0300027	16MnCr5	1

MMS-P programmable magnetic switches

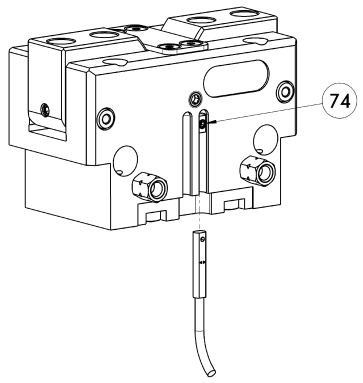

(74) Stop for MMS-P

Position monitoring with two programmable positions per sensor. The end position monitoring is mounted in the C-slot.

Description	ID	Often combined
MMS-P programmable magnetic switches		
MMSK-P 22-S-PNP	0301371	
MMS-P 22-S-M8-PNP	0301370	●
Clip for plug / socket		
CLI-M8	0301463	
Connection cables		
KA BG08-L 4P-0500	0307767	●
KA BG08-L 4P-1000	0307768	
KA BW08-L 4P-0500	0307765	
KA BW08-L 4P-1000	0307766	
Sensor distributor		
V2-M8-4P-2XM8-3P	0301380	

ⓘ Per unit one sensor (closer/S) is required, optionally a cable extension. Please note the minimum permitted bending radii for the sensor cables, which are generally 35 mm.

MMS electronic magnetic switches

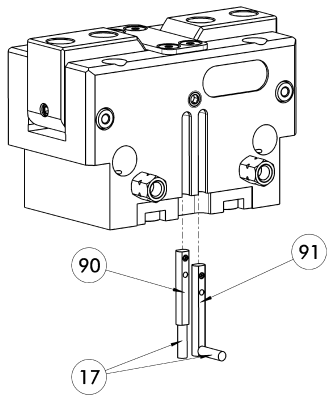

(17) Cable outlet (91) MMS 22...-SA sensor
(90) MMS 22... sensor

End position monitoring for mounting in the C-slot.

Description	ID	Often combined
MMS electronic magnetic switches		
MMS 22-S-M8-PNP	0301032	●
MMSK 22-S-PNP	0301034	
MMS electronic magnetic switches with lateral cable outlet		
MMS 22-S-M8-PNP-SA	0301042	●
MMSK 22-S-PNP-SA	0301044	
Cable extensions		
KV BW08-SG08 3P-0030-PNP	0301495	
KV BW08-SG08 3P-0100-PNP	0301496	
KV BW08-SG08 3P-0200-PNP	0301497	●
Clip for plug / socket		
CLI-M8	0301463	
Connection cables		
KA BG08-L 3P-0300-PNP	0301622	●
KA BG08-L 3P-0500-PNP	0301623	
KA BW08-L 3P-0300-PNP	0301594	
KA BW08-L 3P-0500-PNP	0301502	
Sensor distributor		
V2-M8	0301775	●
V4-M8	0301746	
V8-M8	0301751	

ⓘ Two sensors (closer/S) are required for each unit, plus extension cables as an option. Please note the minimum permitted bending radii for the sensor cables, which are generally 35 mm.

MMS PI1 programmable magnetic switches

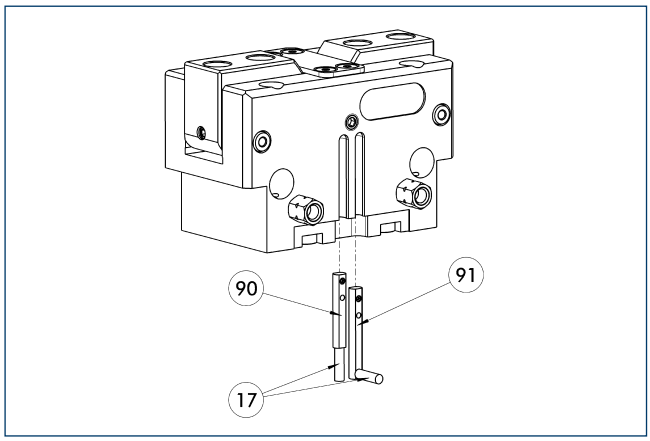

(17) Cable outlet
(91) MMS 22...-PI1-...-SA sensor
(90) MMS 22...-PI1-... sensor

Position query with one programmable position per sensor and electronics integrated in sensor. Programmable via MT magnet teaching tool (included in the scope of delivery) or ST plug teaching tool (optional). Limit position query mounted in C-groove. If the ST plug teaching tools are listed in the table, teaching can only take place with the ST plug teaching tools.

Description	ID	Often combined
MMS PI1 programmable magnetic switches		
MMS 22-PI1-S-M8-PNP	0301160	●
MMSK 22-PI1-S-PNP	0301162	
MMS PI1-HD programmable magnetic switches with stainless steel housing		
MMS 22-PI1-S-M8-PNP-HD	0301110	●
MMSK 22-PI1-S-PNP-HD	0301112	
MMS PI1 programmable magnetic switches with lateral cable outlet		
MMS 22-PI1-S-M8-PNP-SA	0301166	●
MMSK 22-PI1-S-PNP-SA	0301168	

ⓘ Two sensors (closer/S) are required for each unit, plus extension cables as an option. Please note the minimum permitted bending radii for the sensor cables, which are generally 35 mm. Connection cable, cable extensions, and sensor distributors can be found in the table for the MMS 22.

MMS PI2 programmable magnetic switches

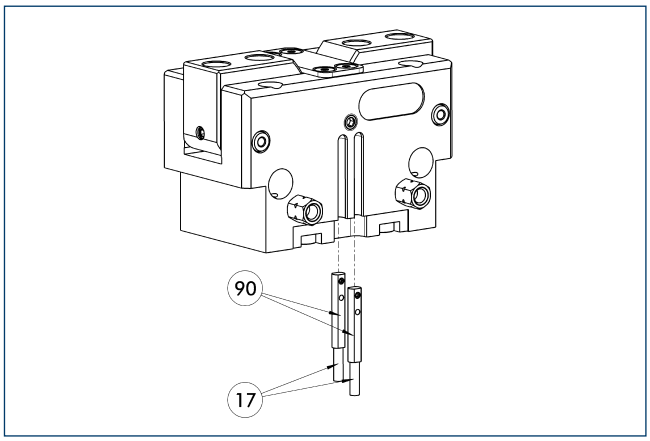

(17) Cable outlet
(90) MMS 22...-PI2-... sensor

Position query with two programmable positions per sensor and electronics integrated in sensor. Programmable via MT magnet teaching tool (included in the scope of delivery) or ST plug teaching tool (optional). Limit position query mounted in C-groove. If the ST plug teaching tools are listed in the table, teaching can only take place with the ST plug teaching tools.

Description	ID	Often combined
MMS PI2 programmable magnetic switches		
MMS 22-PI2-S-M8-PNP	0301180	●
MMSK 22-PI2-S-PNP	0301182	
MMS PI2-HD programmable magnetic switches with stainless steel housing		
MMS 22-PI2-S-M8-PNP-HD	0301130	●
MMSK 22-PI2-S-PNP-HD	0301132	

ⓘ Per unit one sensor (closer/S) is required, optionally a cable extension. Please note the minimum permitted bending radii for the sensor cables, which are generally 35 mm. Connection cable, cable extensions, and sensor distributors can be found in the table for the MMS-P 22.

Mounting kit for IN 40 proximity switches

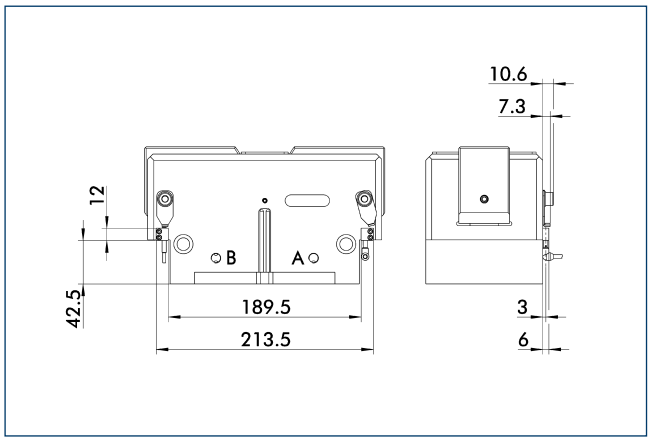

Limit position monitor can be mounted with mounting kit.

Description	ID	
Mounting kit for proximity switch		
AS-IN40-PWG-plus 240	0311780	

ⓘ This mounting kit needs to be ordered optionally as an accessory.

IN 40 inductive proximity switches

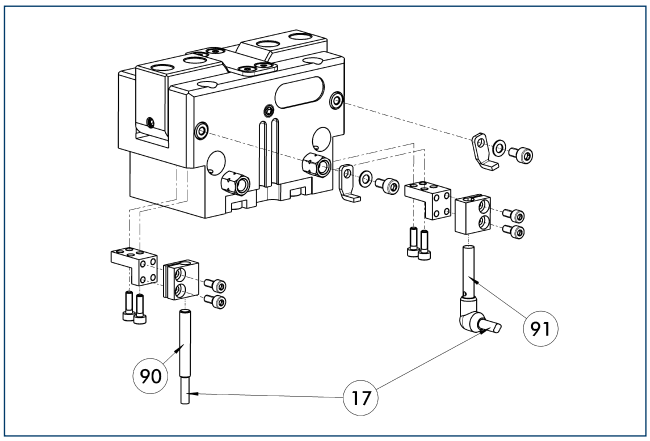

(17) Cable outlet
(91) IN ...-SA sensor
(90) IN ... sensor

Limit position monitor can be mounted with mounting kit.

Description	ID	Often combined
Mounting kit for proximity switch		
AS-IN40-PWG-plus 160	0311780	
Inductive proximity switches		
IN 40-S-M12	0301574	
IN 40-S-M8	0301474	●
INK 40-S	0301555	
Inductive proximity switches with lateral outlet		
IN 40-S-M12-SA	0301577	
IN 40-S-M8-SA	0301473	●
INK 40-S-SA	0301565	
Cable extensions		
KV BG12-SG12 3P-0030-PNP	0301999	
KV BG12-SG12 3P-0060-PNP	0301998	
KV BW08-SG08 3P-0030-PNP	0301495	
KV BW08-SG08 3P-0100-PNP	0301496	
KV BW08-SG08 3P-0200-PNP	0301497	●
KV BW12-SG12 3P-0030-PNP	0301595	
KV BW12-SG12 3P-0100-PNP	0301596	
KV BW12-SG12 3P-0200-PNP	0301597	
Clip for plug / socket		
CLI-M12	0301464	
CLI-M8	0301463	
Connection cables		
KA BG08-L 3P-0300-PNP	0301622	●
KA BG08-L 3P-0500-PNP	0301623	
KA BG12-L 3P-0500-PNP	30016369	
KA BW08-L 3P-0300-PNP	0301594	
KA BW08-L 3P-0500-PNP	0301502	
KA BW12-L 3P-0300-PNP	0301503	
KA BW12-L 3P-0500-PNP	0301507	
Sensor distributor		
V2-M8	0301775	●
V2-M12	0301776	●

ⓘ Two sensors (closer/S) are required for each unit, plus extension cables as an option. This mounting kit needs to be ordered optionally as an accessory. Please note the minimum permitted bending radii for the sensor cables, which are generally 35 mm.

Mounting kit for IN 80 proximity switches

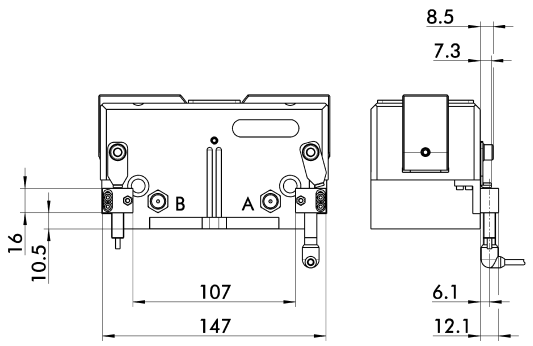

Limit position monitor can be mounted with mounting kit.

Description	ID	
Mounting kit for proximity switch		
AS-IN80-PWG-plus 160	0311781	

ⓘ This mounting kit needs to be ordered optionally as an accessory.

IN 80 inductive proximity switches

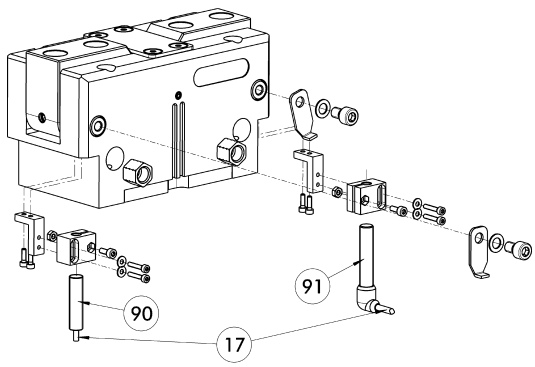

(17) Cable outlet
(90) IN ... sensor
(91) IN ...-SA sensor

Limit position monitor can be mounted with mounting kit.

Description	ID	Often combined
Mounting kit for proximity switch		
AS-IN80-PWG-plus 160	0311781	
Inductive proximity switches		
IN 80-S-M12	0301578	
IN 80-S-M8	0301478	●
IN-C 80-S-M8	0301475	
INK 80-S	0301550	
INK 80-SL	0301579	
Inductive proximity switches with lateral outlet		
IN 80-S-M12-SA	0301587	
IN 80-S-M8-SA	0301483	●
INK 80-S-SA	0301566	
Cable extensions		
KV BG12-SG12 3P-0030-PNP	0301999	
KV BG12-SG12 3P-0060-PNP	0301998	
KV BW08-SG08 3P-0030-PNP	0301495	
KV BW08-SG08 3P-0100-PNP	0301496	
KV BW08-SG08 3P-0200-PNP	0301497	●
KV BW12-SG12 3P-0030-PNP	0301595	
KV BW12-SG12 3P-0100-PNP	0301596	
KV BW12-SG12 3P-0200-PNP	0301597	
Clip for plug / socket		
CLI-M12	0301464	
CLI-M8	0301463	
Connection cables		
KA BG08-L 3P-0300-PNP	0301622	●
KA BG08-L 3P-0500-PNP	0301623	
KA BG12-L 3P-0500-PNP	30016369	
KA BW08-L 3P-0300-PNP	0301594	
KA BW08-L 3P-0500-PNP	0301502	
KA BW12-L 3P-0300-PNP	0301503	
KA BW12-L 3P-0500-PNP	0301507	
Sensor distributor		
V2-M12	0301776	●
V2-M8	0301775	●

ⓘ Two sensors (closer/S) are required for each unit, plus extension cables as an option. This mounting kit needs to be ordered optionally as an accessory. Please note the minimum permitted bending radii for the sensor cables, which are generally 35 mm.

With single-acting 3-fold Piston Drive for high Force Transmission.

3-Finger Angular Grippers pneumatic

SGW Small Components Gripper

Series	Sizes
SGW	
SGW	40

Series	Sizes
SGW	50
SGW	64

For more informationen on this product please visit **www.schunk.com**.

Compact Gripper with Oval Pistons and powerful 1-pin Crank Drive System with 3 Opening Angle Variants.

2-Finger Radial Grippers pneumatic

PRG Universal Gripper

Series	Size	Page
PRG		1284
PRG	26	1288
PRG	34	1296
PRG	42	1304
PRG	52	1312

Series	Size	Page
PRG	64	1320
PRG	80	1328
PRG	100	1334
PRG	125	1340

DRG Sealed Gripper

Series	Size
DRG	
DRG	44
DRG	54

Series	Size
DRG	64
DRG	80
DRG	100

For more informationen on this product please visit **www.schunk.com**.

GAP Angular Parallel Gripper

Series	Size	Page
GAP		1346
GAP	20	1350
GAP	28	1356

Series	Size	Page
GAP	32	1362

Flexible. Powerful. Slim.
PRG Universal Gripper

180°-radial gripper with powerful 1-shift slotted link gear and oval piston

Field of Application

For areas of application which, in addition to a large gripping force, require the shortest possible motion sequences through the radial design of the jaw stroke.

Advantages – Your benefit

Kinematics the 1-shift slotted link gear assures a consistant closing moment from -5° to +7°.

Optimized cycle time due to innovative dampening directly integrated drive chain

Maximum power density for higher closing moments, longer and stable gripper fingers

Many options assure a higher degree of flexibility adjusted to the individual application, the PRG is also available with a mechanic gripping force maintenance device, as a high-temperature version, and with three opening angle versions 30° / 60° / 90°.

Air supply via hose-free direct connection or screw connections for flexible pressure supply in all automated systems

Sizes	Weight	Gripping moment	Angle per jaw	Workpiece weight
Quantity: 8	0.13 .. 6.72 kg	2 .. 295 Nm	30 .. 90°	0.3 .. 6.96 kg

Functional Description

The „1-pin link guide" converts the movement into a powerful closing torque. The closing torque is also amplified with the bent design of the guide.

In addition to a rapid stroke behaviour the slotted link also assures a nearly constant closing torque over a large closing angle range.

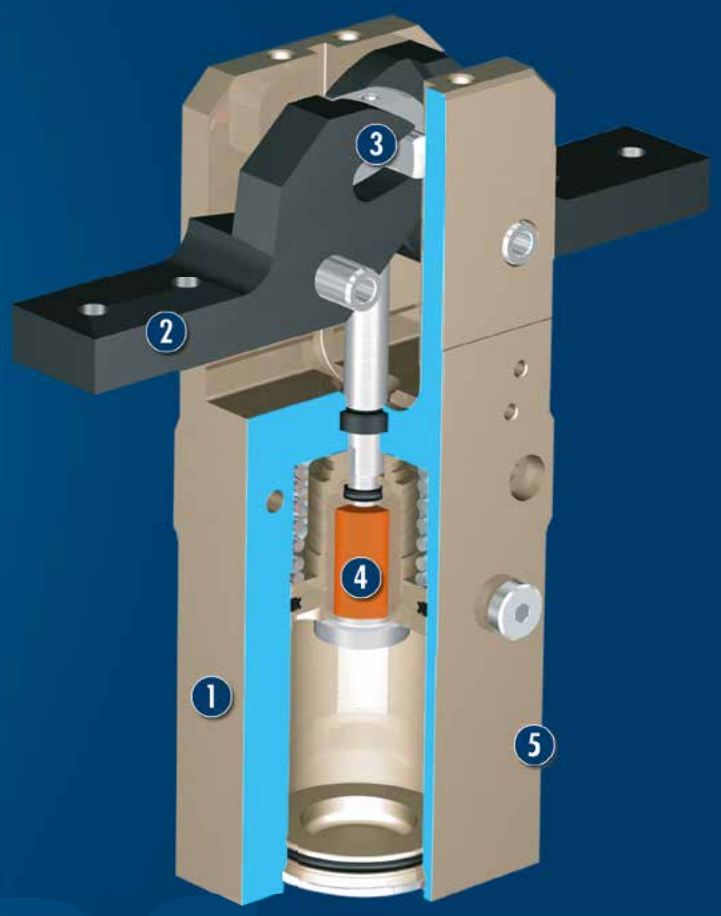

① **Housing**
Weight-optimized through application of high-strength aluminum alloy

② **Base jaw**
for the connection of workpiece-specific gripper fingers

③ **Kinematics**
Slotted link gear for very high gripping forces when the workpiece is contacted

④ **Damping**
Decoupled the drive, for shorter cycle times

⑤ **Monitoring**
Integrated end position monitoring with magnetic switches

CAD data, operating manuals and other current product documents are available at **www.schunk.com**

General Notes about the Series

Operating principle: Crank drive

Housing material: Aluminum alloy, anodized

Base jaw material: Steel

Actuation: pneumatic, with filtered compressed air as per DIN ISO 8573-1: 7 4 4

Warranty: 24 months (details, general terms and conditions and operating manuals can be downloaded at www.schunk.com)

Scope of delivery: Centering sleeves, O-rings for direct connection, assembly and operating manual with manufacturer's declaration

Gripping moment: gripping moment is the arithmetic total of gripping moments for each claw jaw.

Finger length: is measured from the upper edge of the gripper housing in direction to the main axis. If the max. admissible finger length is exceeded, the speed of jaw motions have to be reduced and / or the opening angle has to be diminished, as it is done with heavy fingers. The service life of the gripper can shorten.

Repeat accuracy: is defined as the spread of the limit position after 100 consecutive strokes.

Workpiece weight: is calculated for a force-fit connection with a coefficient of friction of 0.1 and a safety factor of 2 against slippage of the workpiece on acceleration due to gravity g. Considerably heavier workpiece weights are permitted with form-fit gripping.

Closing and opening times: are purely the times that the base jaws or fingers are in motion. Valve switching times, hose filling times or PLC reaction times are not included in the above times and must be taken into consideration when determining cycle times.

Application example

Gripper-swivel combination for handling of small shafts. The 180° opening angle of the gripper replaces a stroke unit which otherwise would be necessary.

1. PRG 2-Finger Radial Gripper
2. SRU-plus Rotary Actuator

SCHUNK offers more ...

The following components make the product PRG even more productive – the suitable addition for the highest functionality, flexibility, reliability, and controlled production.

Centering Sleeves

Fittings

Magnetic Switches

Inductive Proximity Switches

Sensor Distributor

Gripper Pads

Sensor Cables

Plastic Inserts

SDV-P Pressure maintenance Valve

ⓘ Further information regarding the products can be found on the following product pages or at www.schunk.com. Please contact us for further information: SCHUNK technical hotline +49-7133-103-2696

Options and special Information

Gripping force maintenance version AS / IS: The mechanical gripping force maintenance version ensures a minimum gripping force also in the case of a drop in pressure. In the AS / S version this has the effect of a closing force, in the IS version of an opening force.
High-temperature version V/HT: for use in hot environments
180°-Radial Grippers are advantageous since further stroke motions are no more necessary. Since every jaw swivels away by 90°, the gripper is outside of the working area, and a stroke motion back of the whole gripper is no more necessary.
Additional versions: Various options can be combined. Numerous additional options are also available – just tell us what your task is!

PRG 26

SCHUNK Grippers pneumatic | 2-Finger Radial Grippers | Universal Gripper

Gripping force, O.D. gripping

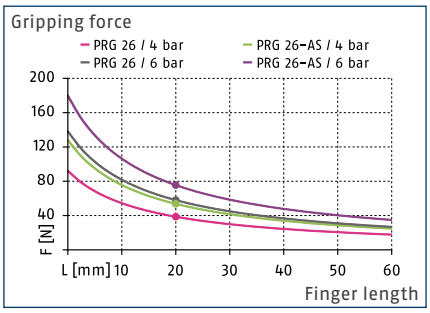

Max. admissible inertia J*

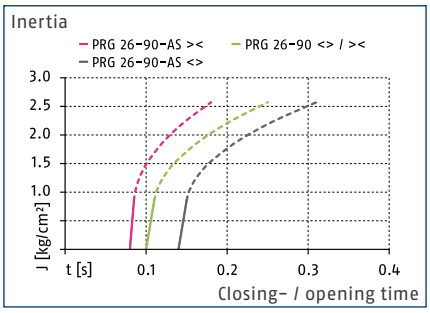

Finger load

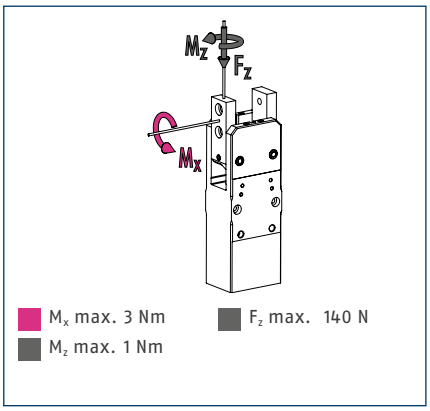

ⓘ The indicated moments and forces are statical values, apply for each base jaw and should not appear simultaneously. If the max. permitted finger weight is exceeded, it is impreative to throttle the air supply so that the jaw movement occurs without any hitting or bouncing. Service life may be reduced.

Technical data

Description		PRG 26-30	PRG 26-30-AS	PRG 26-60	PRG 26-60-AS	PRG 26-90	PRG 26-90-AS
ID		0303651	0303661	0303691	0303701	0303671	0303681
Opening angle per jaw	[°]	30	30	60	60	90	90
Closed angle per jaw up to	[°]	3	3	3	3	3	3
Closing moment	[Nm]	2	2.6	2	2.6	2	2.6
Spring-actuated closing moment	[Nm]		0.6		0.6		0.6
Weight	[kg]	0.13	0.135	0.13	0.135	0.13	0.135
Recommended workpiece weight	[kg]	0.3	0.3	0.3	0.3	0.3	0.3
Fluid consumption per double stroke	[cm³]	6.5	6.5	7.5	7.5	9	9
min. / max. operating pressure	[bar]	2/8	4/6.5	2/8	4/6.5	2/8	4/6.5
Nominal operating pressure	[bar]	6	6	6	6	6	6
Closing- / opening time	[s]	0.06/0.06	0.06/0.08	0.08/0.08	0.08/0.11	0.1/0.1	0.09/0.14
Closing- / opening time only with spring	[s]		0.05		0.10		0.13
max. permitted finger length	[mm]	40	40	40	40	40	40
max. mass moment of inertia per jaw*	[kgcm²]	0.86	0.86	0.86	0.86	0.86	0.86
IP class		20	20	20	20	20	20
min. / max. ambient temperature	[°C]	5/90	5/90	5/90	5/90	5/90	5/90
Repeat accuracy	[mm]	0.05	0.05	0.05	0.05	0.05	0.05
Options and their characteristics							
High-temperature version		39303651	39303661	39303691	39303701	39303671	39303681
min. / max. ambient temperature	[°C]	5/130	5/130	5/130	5/130	5/130	5/130

*The unit can be actuated without an external customized throttling at the given value of max. mass moment of inertia per jaw. In case of higher mass moments of inertia, an additional throttling is possible.
The curve applies for 90° versions. For other versions the curve must be parallely off-set according to the opening and closing times.
The specified closing moment is obtained at an opening angle of 0°. Closing moments for further angles can be read from the following diagram, closing moment to opening angle.

Main view

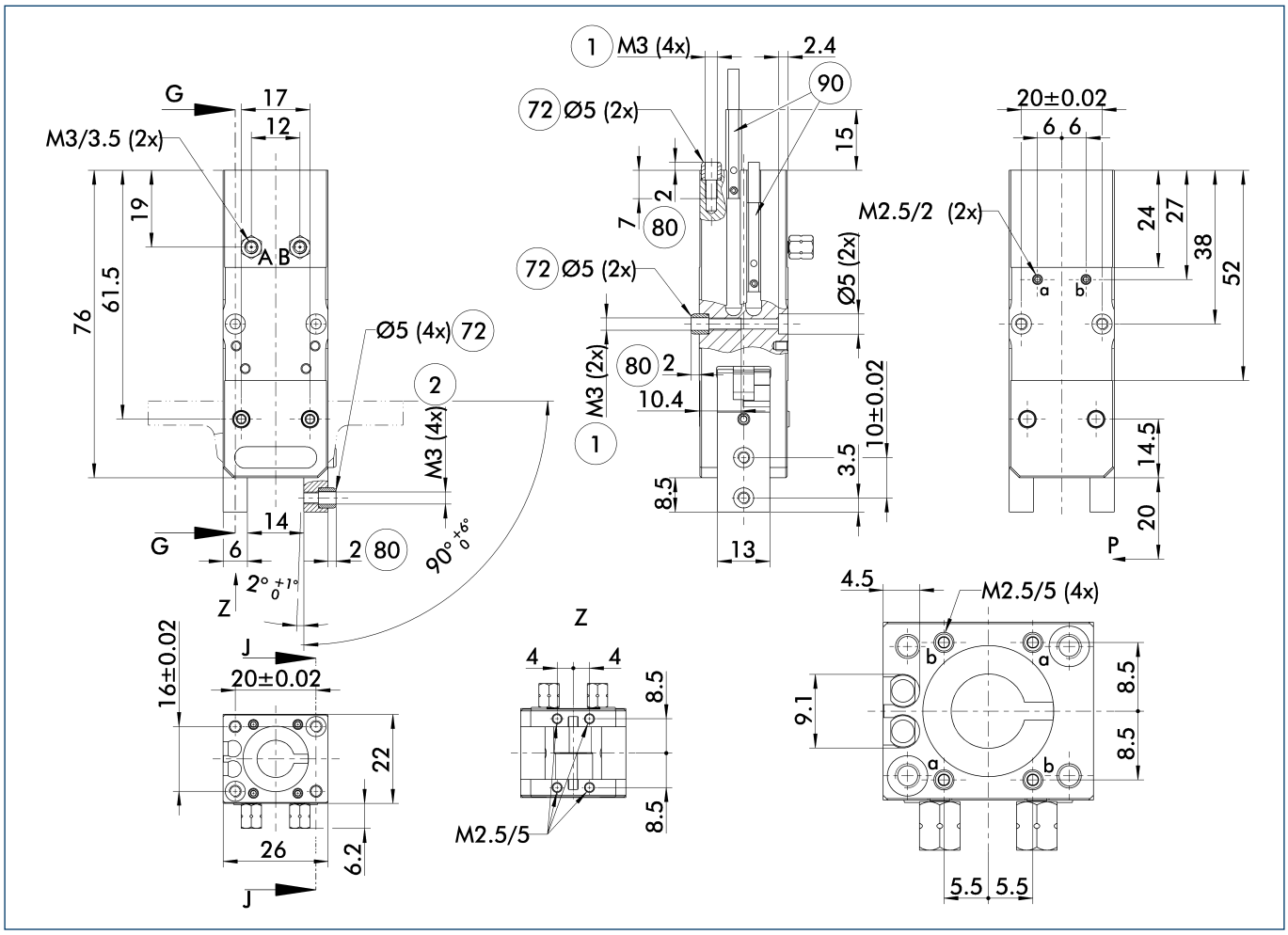

The drawing shows the gripper in the basic version with closed jaws, without dimensional consideration of the options described below.

ⓘ The SDV-P pressure maintenance valve can also be used for I.D. or O.D. gripping alternatively or in addition to the spring-loaded, mechanical gripping force maintenance device (see catalog section on "Accessories").

A, a Main / direct connection, gripper opening

B, b Main / direct connection, gripper closing

(1) Gripper connection

(2) Finger connection

(72) Fit for centering sleeves

(80) Depth of the centering sleeve hole in the mating part

(90) MMS 22... sensor

Closing torque curve**

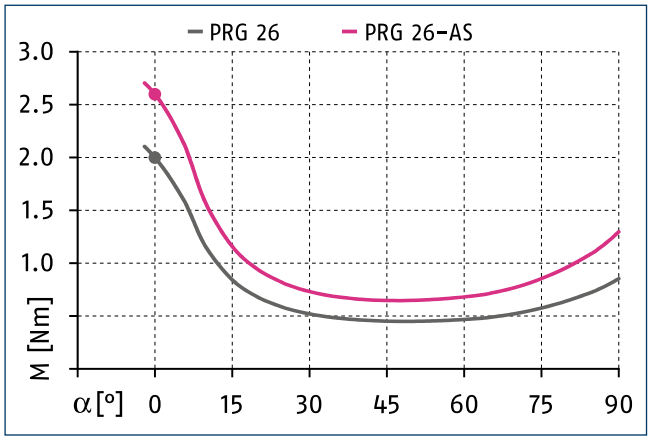

**The diagramm is valid for all opening angle variants.

Maximum permitted finger projection

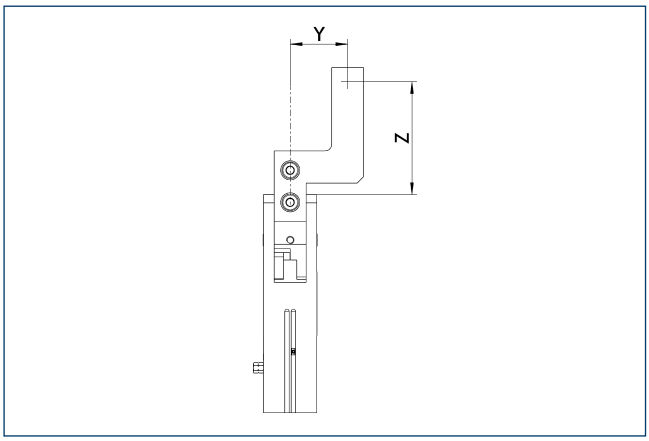

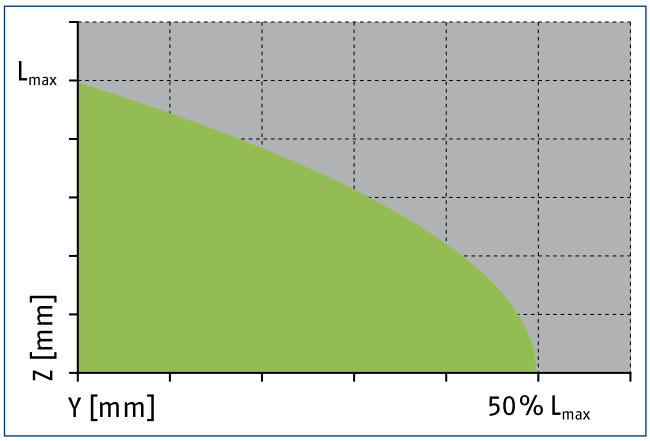

Permitted range Inadmissible range

L_{max} is equivalent to the maximum permitted finger length, see the chart of technical specifications.

Hose-free direct connection M2.5

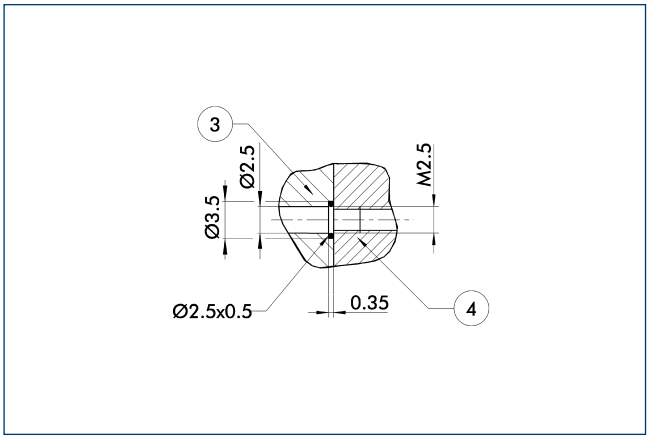

3 Adapter 4 Gripper

The direct connection is used for supplying compressed air without hoses. Instead, the pressure medium is fed through bore-holes in the mounting plate.

Finger design

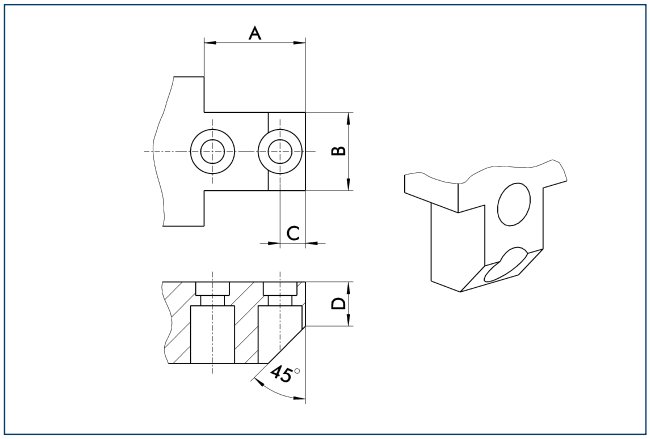

The drawing shows one posibility to design the gripper fingers.

A	B	C	D
[mm]	[mm]	[mm]	[mm]
10	11.5	3.7	6.5

SDV-P pressure maintenance valve

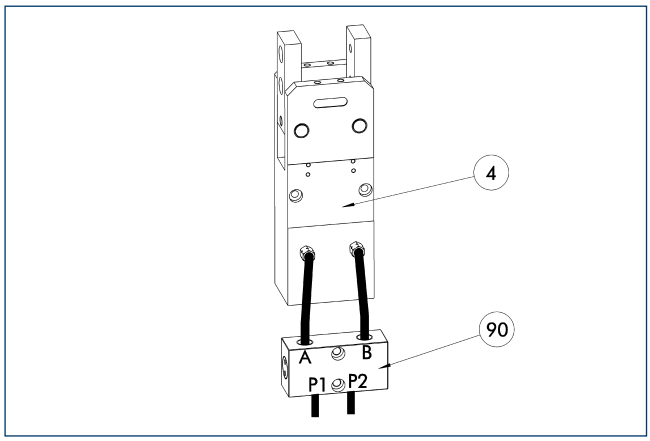

(4) Gripper

(90) SDV-P pressure maintenance valve

The SDV-P pressure maintenance valves ensure that the pressure in the piston chamber of pneumatic gripping, rotary, linear, and quick-change modules is maintained temporarily during an emergency stop.

Description	ID	
Pressure maintenance valve		
SDV-P 04	0403130	

Mounting kit for IN 40 proximity switches

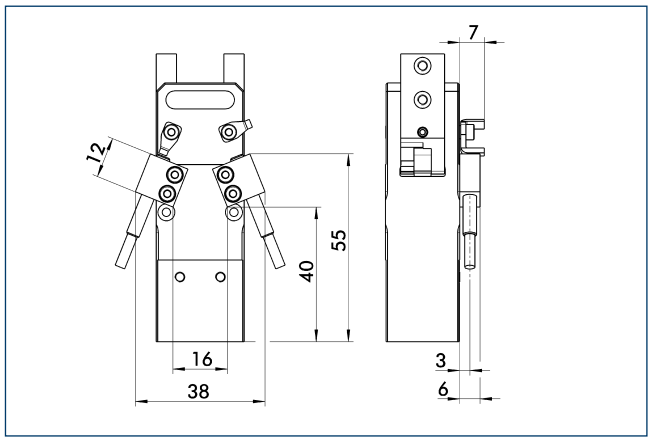

The mounting kit consists of brackets, control cams and appropriate fastening materials. Proximity switches have to be ordered separately.

Description	ID	
Mounting kit for proximity switch		
AS-PRG 26-IN40	0303621	

ⓘ This mounting kit needs to be ordered optionally as an accessory.

IN 40 inductive proximity switches

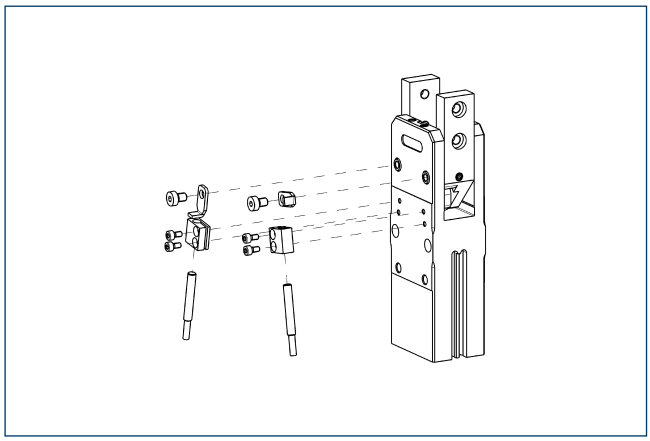

Limit position monitor can be mounted with mounting kit.

Description	ID	Often combined
Mounting kit for proximity switch		
AS-PRG 26-IN40	0303621	
Inductive proximity switches		
IN 40-S-M12	0301574	
IN 40-S-M8	0301474	●
INK 40-S	0301555	
Inductive proximity switches with lateral outlet		
IN 40-S-M12-SA	0301577	
IN 40-S-M8-SA	0301473	●
INK 40-S-SA	0301565	
Cable extensions		
KV BG12-SG12 3P-0030-PNP	0301999	
KV BG12-SG12 3P-0060-PNP	0301998	
KV BW08-SG08 3P-0030-PNP	0301495	
KV BW08-SG08 3P-0100-PNP	0301496	
KV BW08-SG08 3P-0200-PNP	0301497	●
KV BW12-SG12 3P-0030-PNP	0301595	
KV BW12-SG12 3P-0100-PNP	0301596	
KV BW12-SG12 3P-0200-PNP	0301597	
Clip for plug / socket		
CLI-M12	0301464	
CLI-M8	0301463	
Connection cables		
KA BG08-L 3P-0300-PNP	0301622	●
KA BG08-L 3P-0500-PNP	0301623	
KA BG12-L 3P-0500-PNP	30016369	
KA BW08-L 3P-0300-PNP	0301594	
KA BW08-L 3P-0500-PNP	0301502	
KA BW12-L 3P-0300-PNP	0301503	
KA BW12-L 3P-0500-PNP	0301507	
Sensor distributor		
V2-M8	0301775	●
V2-M12	0301776	●

ⓘ Two sensors (closer/S) are required for each unit, plus extension cables as an option. This mounting kit needs to be ordered optionally as an accessory. Please note the minimum permitted bending radii for the sensor cables, which are generally 35 mm.

Mounting kit for IN 80 proximity switches

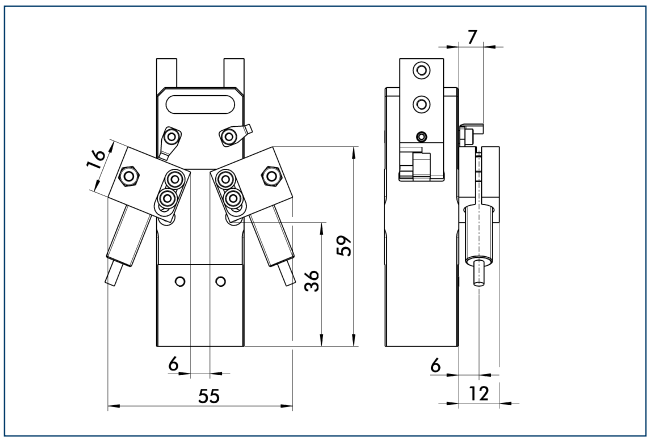

The mounting kit consists of brackets, control cams and appropriate fastening materials. Proximity switches have to be ordered separately.

Description	ID	
Mounting kit for proximity switch		
AS-PRG 26-IN80	0304132	

ⓘ This mounting kit needs to be ordered optionally as an accessory.

IN 80 inductive proximity switches

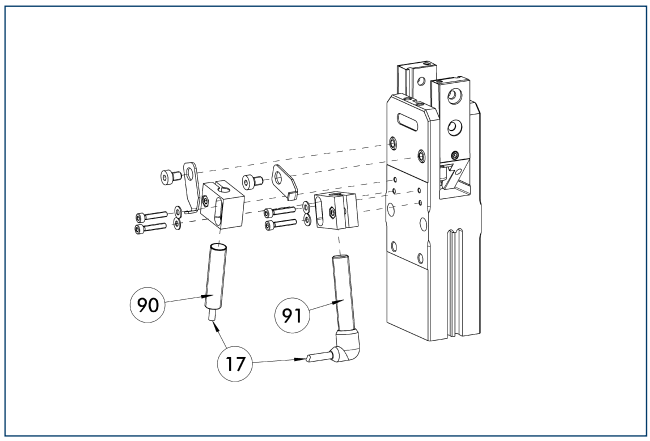

(17) Cable outlet
(91) IN ...-SA sensor
(90) IN ... sensor

Limit position monitor can be mounted with mounting kit.

Description	ID	Often combined
Mounting kit for proximity switch		
AS-PRG 26-IN80	0304132	
Inductive proximity switches		
IN 80-S-M12	0301578	
IN 80-S-M8	0301478	●
INK 80-S	0301550	
Inductive proximity switches with lateral outlet		
IN 80-S-M12-SA	0301587	
IN 80-S-M8-SA	0301483	●
INK 80-S-SA	0301566	
Cable extensions		
KV BG12-SG12 3P-0030-PNP	0301999	
KV BG12-SG12 3P-0060-PNP	0301998	
KV BW08-SG08 3P-0030-PNP	0301495	
KV BW08-SG08 3P-0100-PNP	0301496	
KV BW08-SG08 3P-0200-PNP	0301497	●
KV BW12-SG12 3P-0030-PNP	0301595	
KV BW12-SG12 3P-0100-PNP	0301596	
KV BW12-SG12 3P-0200-PNP	0301597	
Clip for plug / socket		
CLI-M12	0301464	
CLI-M8	0301463	
Connection cables		
KA BG08-L 3P-0300-PNP	0301622	●
KA BG08-L 3P-0500-PNP	0301623	
KA BG12-L 3P-0500-PNP	30016369	
KA BW08-L 3P-0300-PNP	0301594	
KA BW08-L 3P-0500-PNP	0301502	
KA BW12-L 3P-0300-PNP	0301503	
KA BW12-L 3P-0500-PNP	0301507	
Sensor distributor		
V2-M8	0301775	●
V2-M12	0301776	●

ⓘ Two sensors (closer/S) are required for each unit, plus extension cables as an option. This mounting kit needs to be ordered optionally as an accessory. Please note the minimum permitted bending radii for the sensor cables, which are generally 35 mm.

MMS electronic magnetic switches

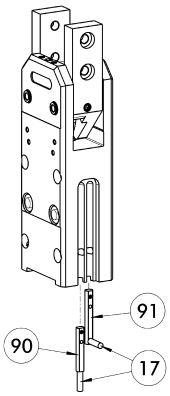

(17) Cable outlet
(91) MMS 22...-SA sensor
(90) MMS 22... sensor

End position monitoring for mounting in the C-slot.

Description	ID	Often combined
MMS electronic magnetic switches		
MMS 22-S-M8-PNP	0301032	●
MMSK 22-S-PNP	0301034	
MMS electronic magnetic switches with lateral cable outlet		
MMS 22-S-M8-PNP-SA	0301042	●
MMSK 22-S-PNP-SA	0301044	
Reed switches		
RMS 22-S-M8	0377720	●
Cable extensions		
KV BW08-SG08 3P-0030-PNP	0301495	
KV BW08-SG08 3P-0100-PNP	0301496	
KV BW08-SG08 3P-0200-PNP	0301497	●
Clip for plug / socket		
CLI-M8	0301463	
Connection cables		
KA BG08-L 3P-0300-PNP	0301622	●
KA BG08-L 3P-0500-PNP	0301623	
KA BW08-L 3P-0300-PNP	0301594	
KA BW08-L 3P-0500-PNP	0301502	
RSS radio sensor system		
RSS-T2	0377710	
Sensor distributor		
V2-M8	0301775	●
V4-M8	0301746	
V8-M8	0301751	

ⓘ Two sensors (closer/S) are required for each unit, plus extension cables as an option. Please note the minimum permitted bending radii for the sensor cables, which are generally 35 mm.

MMS PI1 programmable magnetic switches

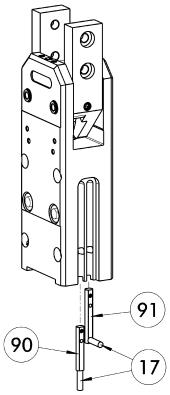

(17) Cable outlet
(91) MMS 22...-PI1-...-SA sensor
(90) MMS 22...-PI1-... sensor

Position query with one programmable position per sensor and electronics integrated in sensor. Programmable via MT magnet teaching tool (included in the scope of delivery) or ST plug teaching tool (optional). Limit position query mounted in C-groove. If the ST plug teaching tools are listed in the table, teaching can only take place with the ST plug teaching tools.

Description	ID	Often combined
MMS PI1 programmable magnetic switches		
MMS 22-PI1-S-M8-PNP	0301160	●
MMSK 22-PI1-S-PNP	0301162	
MMS PI1-HD programmable magnetic switches with stainless steel housing		
MMS 22-PI1-S-M8-PNP-HD	0301110	●
MMSK 22-PI1-S-PNP-HD	0301112	
MMS PI1 programmable magnetic switches with lateral cable outlet		
MMS 22-PI1-S-M8-PNP-SA	0301166	●
MMSK 22-PI1-S-PNP-SA	0301168	

ⓘ Two sensors (closer/S) are required for each unit, plus extension cables as an option. Please note the minimum permitted bending radii for the sensor cables, which are generally 35 mm. Connection cable, cable extensions, and sensor distributors can be found in the table for the MMS 22.

MMS PI2 programmable magnetic switches

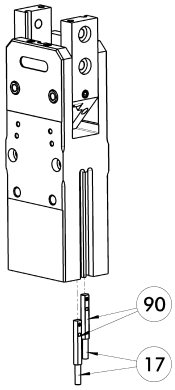

(17) Cable outlet
(90) MMS 22...-PI2-... sensor

Position query with two programmable positions per sensor and electronics integrated in sensor. Programmable via MT magnet teaching tool (included in the scope of delivery) or ST plug teaching tool (optional). Limit position query mounted in C-groove. If the ST plug teaching tools are listed in the table, teaching can only take place with the ST plug teaching tools.

Description	ID	Often combined
MMS PI2 programmable magnetic switches		
MMS 22-PI2-S-M8-PNP	0301180	●
MMSK 22-PI2-S-PNP	0301182	
MMS PI2-HD programmable magnetic switches with stainless steel housing		
MMS 22-PI2-S-M8-PNP-HD	0301130	●
MMSK 22-PI2-S-PNP-HD	0301132	

ⓘ Per unit one sensor (closer/S) is required, optionally a cable extension. Please note the minimum permitted bending radii for the sensor cables, which are generally 35 mm. Connection cable, cable extensions, and sensor distributors can be found in the table for the MMS-P 22.

MMS-P programmable magnetic switches

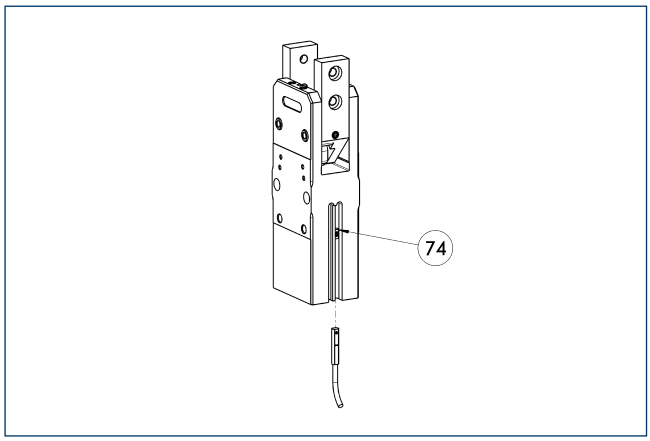

74 Stop for MMS-P

Position monitoring with two programmable positions per sensor. The end position monitoring is mounted in the C-slot.

Description	ID	Often combined
MMS-P programmable magnetic switches		
MMSK-P 22-S-PNP	0301371	
MMS-P 22-S-M8-PNP	0301370	●
Clip for plug / socket		
CLI-M8	0301463	
Connection cables		
KA BG08-L 4P-0500	0307767	●
KA BG08-L 4P-1000	0307768	
KA BW08-L 4P-0500	0307765	
KA BW08-L 4P-1000	0307766	
Sensor distributor		
V2-M8-4P-2XM8-3P	0301380	

ⓘ Per unit one sensor (closer/S) is required, optionally a cable extension. Please note the minimum permitted bending radii for the sensor cables, which are generally 35 mm.

PRG 34

SCHUNK Grippers pneumatic | 2-Finger Radial Grippers | Universal Gripper

Gripping force, O.D. gripping

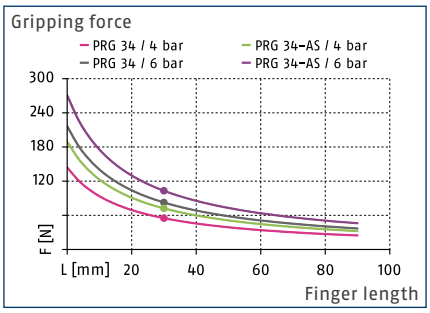

Max. admissible inertia J*

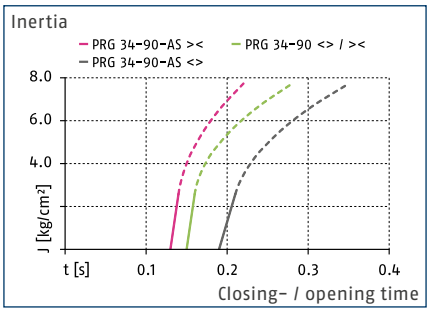

Finger load

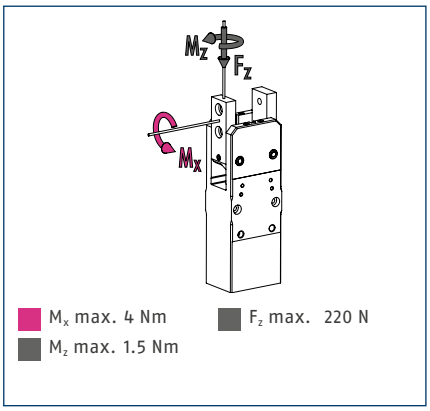

ⓘ The indicated moments and forces are statical values, apply for each base jaw and should not appear simultaneously. If the max. permitted finger weight is exceeded, it is impreative to throttle the air supply so that the jaw movement occurs without any hitting or bouncing. Service life may be reduced.

Technical data

Description		PRG 34-30	PRG 34-30-AS	PRG 34-60	PRG 34-60-AS	PRG 34-90	PRG 34-90-AS
ID		0303652	0303662	0303692	0303702	0303672	0303682
Opening angle per jaw	[°]	30	30	60	60	90	90
Closed angle per jaw up to	[°]	3	3	3	3	3	3
Closing moment		4	5	4	5	4	5
Spring-actuated closing moment	[Nm]		1		1		1
Weight	[kg]	0.24	0.25	0.24	0.25	0.24	0.25
Recommended workpiece weight	[kg]	0.42	0.42	0.42	0.42	0.42	0.42
Fluid consumption per double stroke	[cm³]	12	12	14.5	14.5	17.5	17.5
min. / max. operating pressure	[bar]	2/8	4/6.5	2/8	4/6.5	2/8	4/6.5
Nominal operating pressure	[bar]	6	6	6	6	6	6
Closing- / opening time	[s]	0.08/0.08	0.08/0.13	0.12/0.12	0.11/0.16	0.15/0.15	0.13/0.19
Closing- / opening time only with spring	[s]		0.07		0.14		0.21
max. permitted finger length	[mm]	60	60	60	60	60	60
max. mass moment of inertia per jaw*	[kgcm²]	2.58	2.58	2.58	2.58	2.58	2.58
IP class		20	20	20	20	20	20
min. / max. ambient temperature	[°C]	5/90	5/90	5/90	5/90	5/90	5/90
Repeat accuracy	[mm]	0.05	0.05	0.05	0.05	0.05	0.05
Options and their characteristics							
High-temperature version		39303652	39303662	39303692	39303702	39303672	39303682
min. / max. ambient temperature	[°C]	5/130	5/130	5/130	5/130	5/130	5/130

*The unit can be actuated without an external customized throttling at the given value of max. mass moment of inertia per jaw. In case of higher mass moments of inertia, an additional throttling is possible.
The curve applies for 90° versions. For other versions the curve must be parallely off-set according to the opening and closing times.
The specified closing moment is obtained at an opening angle of 0°. Closing moments for further angles can be read from the following diagram, closing moment to opening angle.

Main view

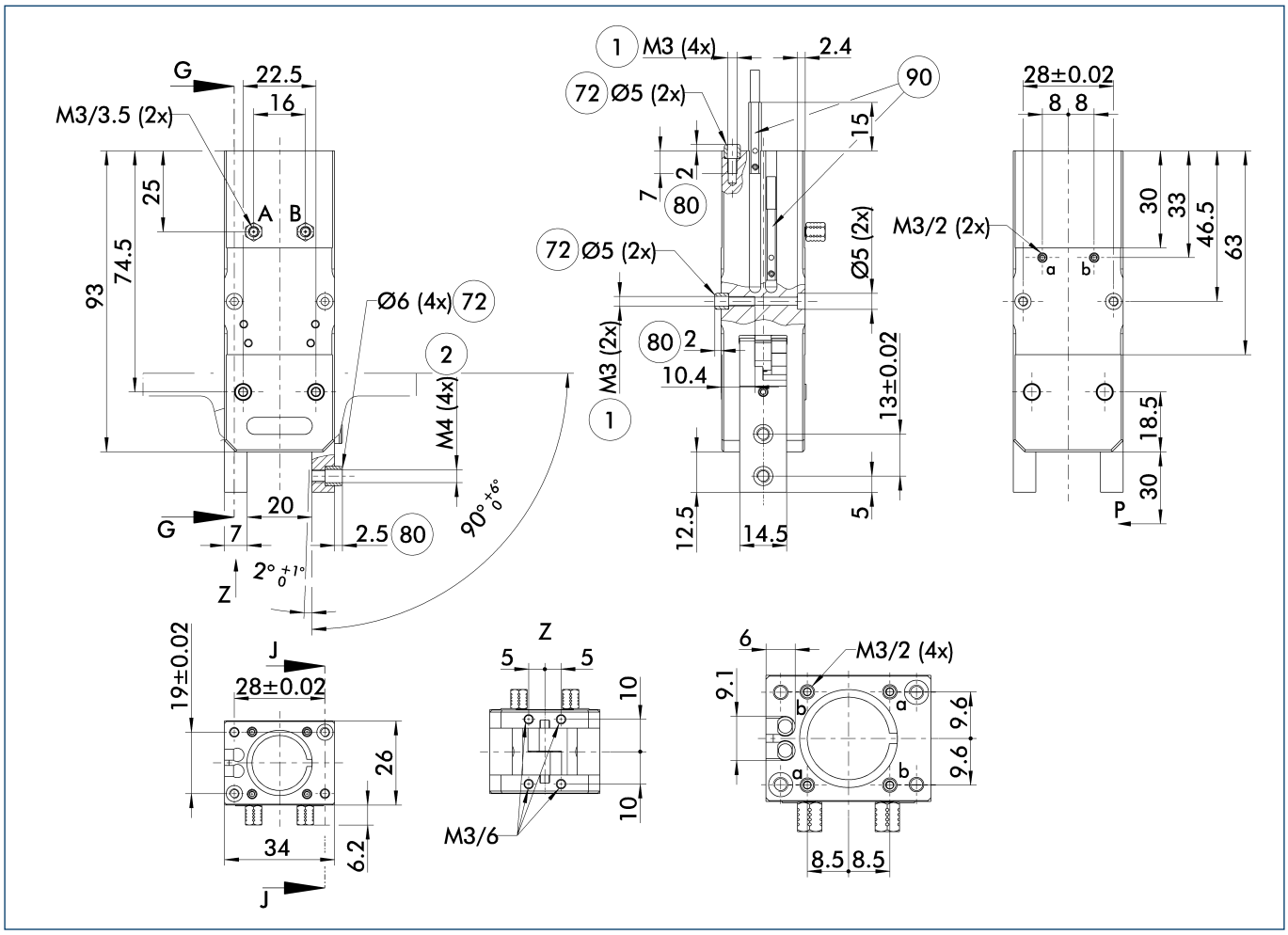

The drawing shows the gripper in the basic version with closed jaws, without dimensional consideration of the options described below.

ⓘ The SDV-P pressure maintenance valve can also be used for I.D. or O.D. gripping alternatively or in addition to the spring-loaded, mechanical gripping force maintenance device (see catalog section on "Accessories").

A, a Main / direct connection, gripper opening

B, b Main / direct connection, gripper closing

(1) Gripper connection

(2) Finger connection

(72) Fit for centering sleeves

(80) Depth of the centering sleeve hole in the mating part

(90) MMS 22... sensor

Closing torque curve**

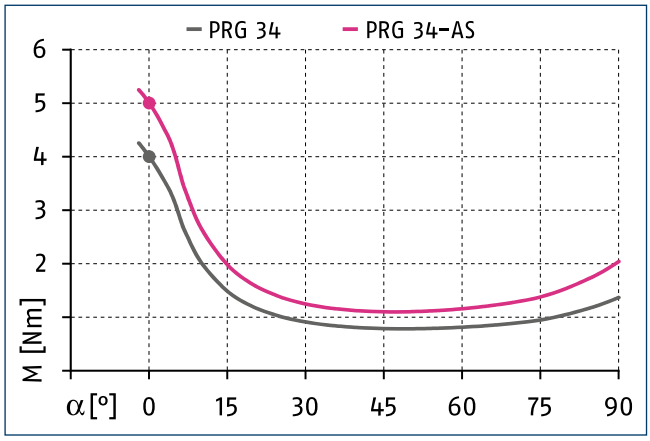

**The diagramm is valid for all opening angle variants.

Maximum permitted finger projection

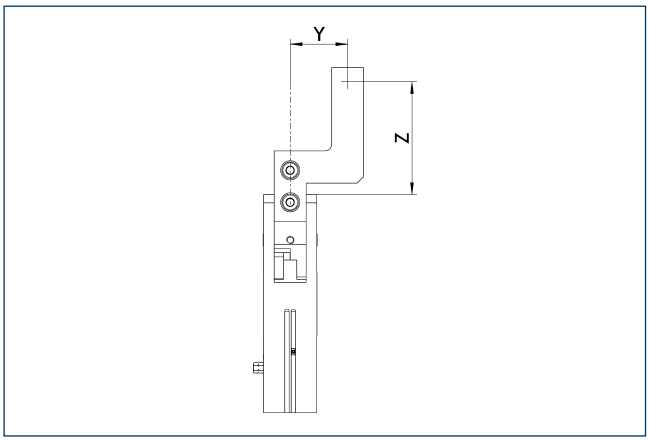

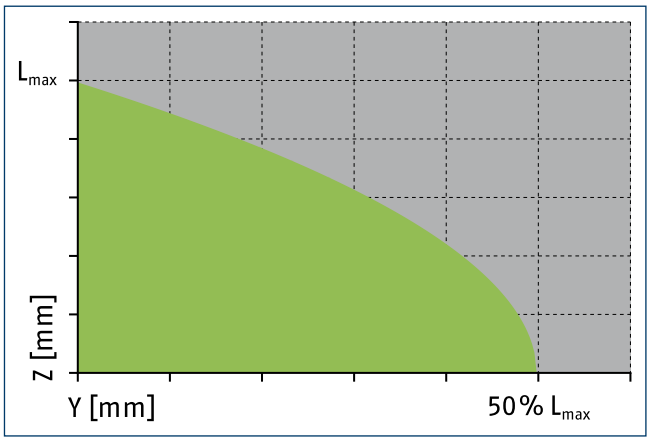

Permitted range Inadmissible range

L_{max} is equivalent to the maximum permitted finger length, see the chart of technical specifications.

Hose-free direct connection M3

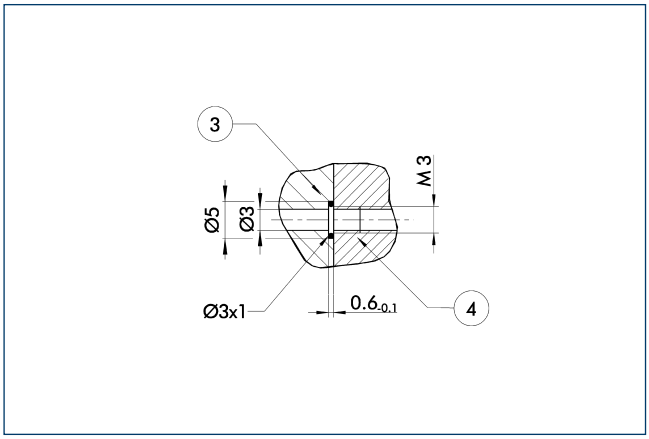

(3) Adapter (4) Gripper

The direct connection is used for supplying compressed air without hoses. Instead, the pressure medium is fed through bore-holes in the mounting plate.

Finger design

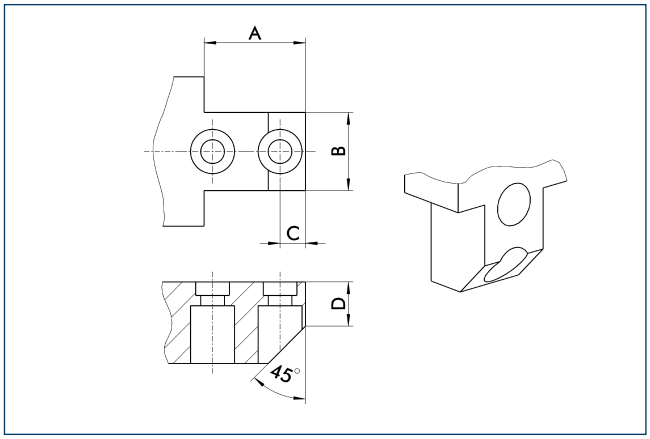

The drawing shows one posibility to design the gripper fingers.

A	B	C	D
[mm]	[mm]	[mm]	[mm]
11	14	5	9

SDV-P pressure maintenance valve

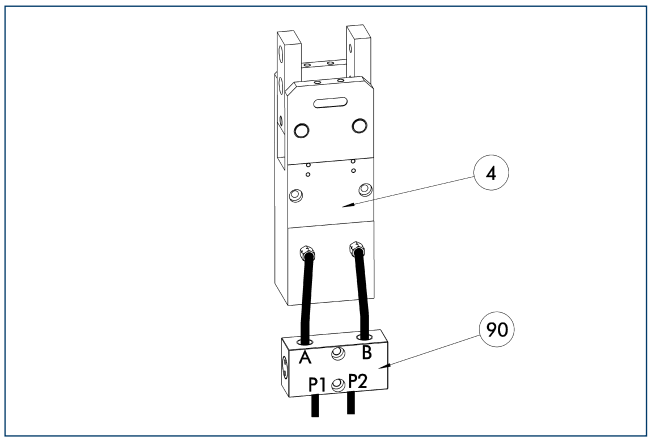

(4) Gripper

(90) SDV-P pressure maintenance valve

The SDV-P pressure maintenance valves ensure that the pressure in the piston chamber of pneumatic gripping, rotary, linear, and quick-change modules is maintained temporarily during an emergency stop.

Description	ID	
Pressure maintenance valve		
SDV-P 04	0403130	

Mounting kit for IN 40 proximity switches

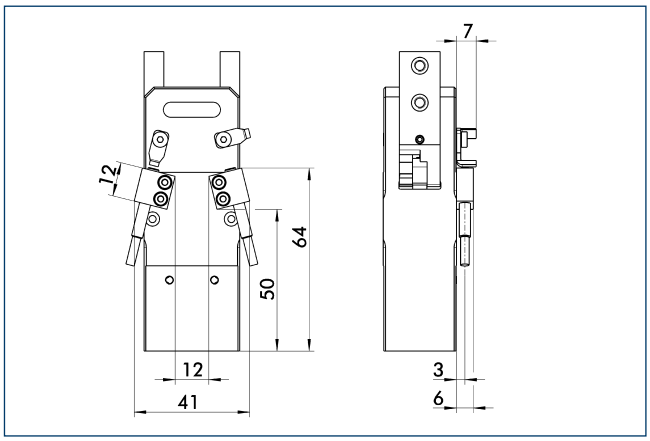

The mounting kit consists of brackets, control cams and appropriate fastening materials. Proximity switches have to be ordered separately.

Description	ID	
Mounting kit for proximity switch		
AS-PRG 34-IN40	0303622	

ⓘ This mounting kit needs to be ordered optionally as an accessory.

IN 40 inductive proximity switches

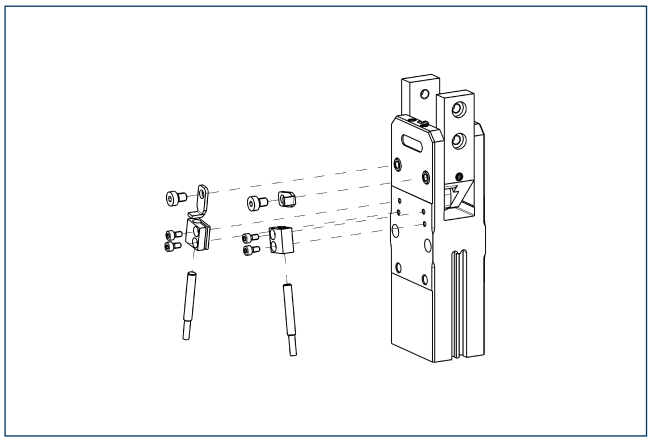

Limit position monitor can be mounted with mounting kit.

Description	ID	Often combined
Mounting kit for proximity switch		
AS-PRG 34-IN40	0303622	
Inductive proximity switches		
IN 40-S-M12	0301574	
IN 40-S-M8	0301474	●
INK 40-S	0301555	
Cable extensions		
KV BG12-SG12 3P-0030-PNP	0301999	
KV BG12-SG12 3P-0060-PNP	0301998	
KV BW08-SG08 3P-0030-PNP	0301495	
KV BW08-SG08 3P-0100-PNP	0301496	
KV BW08-SG08 3P-0200-PNP	0301497	●
KV BW12-SG12 3P-0030-PNP	0301595	
KV BW12-SG12 3P-0100-PNP	0301596	
KV BW12-SG12 3P-0200-PNP	0301597	
Clip for plug / socket		
CLI-M12	0301464	
CLI-M8	0301463	
Connection cables		
KA BG08-L 3P-0300-PNP	0301622	●
KA BG08-L 3P-0500-PNP	0301623	
KA BG12-L 3P-0500-PNP	30016369	
KA BW08-L 3P-0300-PNP	0301594	
KA BW08-L 3P-0500-PNP	0301502	
KA BW12-L 3P-0300-PNP	0301503	
KA BW12-L 3P-0500-PNP	0301507	
Sensor distributor		
V2-M8	0301775	●
V2-M12	0301776	●
V4-M12	0301747	
V4-M8	0301746	
V8-M12	0301752	
V8-M8	0301751	

ⓘ Two sensors (closer/S) are required for each unit, plus extension cables as an option. This mounting kit needs to be ordered optionally as an accessory. Please note the minimum permitted bending radii for the sensor cables, which are generally 35 mm.

Mounting kit for IN 80 proximity switches

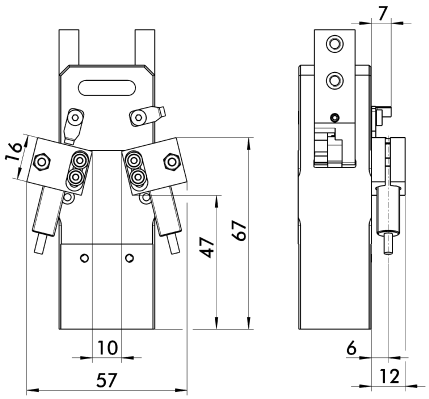

The mounting kit consists of brackets, control cams and appropriate fastening materials. Proximity switches have to be ordered separately.

Description	ID	
Mounting kit for proximity switch		
AS-PRG 34-IN80	0304133	

ⓘ This mounting kit needs to be ordered optionally as an accessory.

IN 80 inductive proximity switches

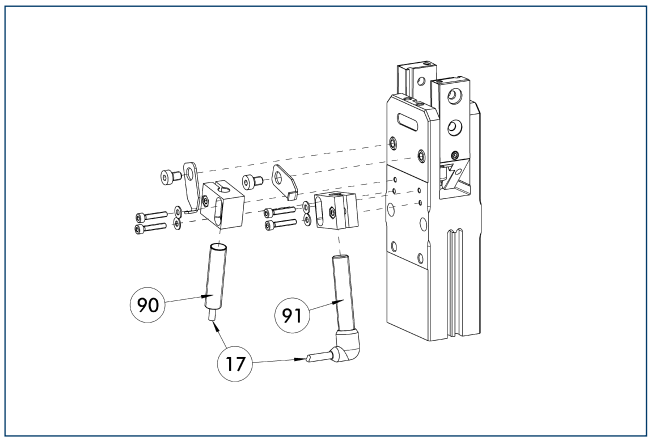

(17) Cable outlet
(91) IN ...-SA sensor
(90) IN ... sensor

Limit position monitor can be mounted with mounting kit.

Description	ID	Often combined
Mounting kit for proximity switch		
AS-PRG 34-IN80	0304133	
Inductive proximity switches		
IN 80-S-M12	0301578	
IN 80-S-M8	0301478	●
INK 80-S	0301550	
Inductive proximity switches with lateral outlet		
IN 80-S-M12-SA	0301587	
IN 80-S-M8-SA	0301483	●
INK 80-S-SA	0301566	
Cable extensions		
KV BG12-SG12 3P-0030-PNP	0301999	
KV BG12-SG12 3P-0060-PNP	0301998	
KV BW08-SG08 3P-0030-PNP	0301495	
KV BW08-SG08 3P-0100-PNP	0301496	
KV BW08-SG08 3P-0200-PNP	0301497	●
KV BW12-SG12 3P-0030-PNP	0301595	
KV BW12-SG12 3P-0100-PNP	0301596	
KV BW12-SG12 3P-0200-PNP	0301597	
Clip for plug / socket		
CLI-M12	0301464	
CLI-M8	0301463	
Connection cables		
KA BG08-L 3P-0300-PNP	0301622	●
KA BG08-L 3P-0500-PNP	0301623	
KA BG12-L 3P-0500-PNP	30016369	
KA BW08-L 3P-0300-PNP	0301594	
KA BW08-L 3P-0500-PNP	0301502	
KA BW12-L 3P-0300-PNP	0301503	
KA BW12-L 3P-0500-PNP	0301507	
Sensor distributor		
V2-M8	0301775	●
V2-M12	0301776	●

ⓘ Two sensors (closer/S) are required for each unit, plus extension cables as an option. This mounting kit needs to be ordered optionally as an accessory. Please note the minimum permitted bending radii for the sensor cables, which are generally 35 mm.

MMS electronic magnetic switches

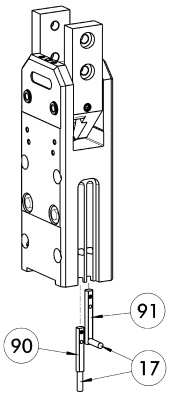

(17) Cable outlet
(91) MMS 22...-SA sensor
(90) MMS 22... sensor

End position monitoring for mounting in the C-slot.

Description	ID	Often combined
MMS electronic magnetic switches		
MMS 22-S-M8-PNP	0301032	●
MMSK 22-S-PNP	0301034	
MMS electronic magnetic switches with lateral cable outlet		
MMS 22-S-M8-PNP-SA	0301042	●
MMSK 22-S-PNP-SA	0301044	
Reed switches		
RMS 22-S-M8	0377720	●
Cable extensions		
KV BW08-SG08 3P-0030-PNP	0301495	
KV BW08-SG08 3P-0100-PNP	0301496	
KV BW08-SG08 3P-0200-PNP	0301497	●
Clip for plug / socket		
CLI-M8	0301463	
Connection cables		
KA BG08-L 3P-0300-PNP	0301622	●
KA BG08-L 3P-0500-PNP	0301623	
KA BW08-L 3P-0300-PNP	0301594	
KA BW08-L 3P-0500-PNP	0301502	
RSS radio sensor system		
RSS-T2	0377710	
Sensor distributor		
V2-M8	0301775	●
V4-M8	0301746	
V8-M8	0301751	

ⓘ Two sensors (closer/S) are required for each unit, plus extension cables as an option. Please note the minimum permitted bending radii for the sensor cables, which are generally 35 mm.

MMS PI1 programmable magnetic switches

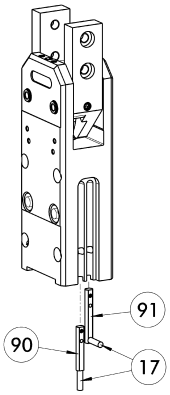

(17) Cable outlet
(91) MMS 22...-PI1-...-SA sensor
(90) MMS 22...-PI1-... sensor

Position query with one programmable position per sensor and electronics integrated in sensor. Programmable via MT magnet teaching tool (included in the scope of delivery) or ST plug teaching tool (optional). Limit position query mounted in C-groove. If the ST plug teaching tools are listed in the table, teaching can only take place with the ST plug teaching tools.

Description	ID	Often combined
Plug teaching tool		
ST-MMS 22-PI1-PNP	0301025	
MMS PI1 programmable magnetic switches		
MMS 22-PI1-S-M8-PNP	0301160	●
MMSK 22-PI1-S-PNP	0301162	
MMS PI1-HD programmable magnetic switches with stainless steel housing		
MMS 22-PI1-S-M8-PNP-HD	0301110	●
MMSK 22-PI1-S-PNP-HD	0301112	
MMS PI1 programmable magnetic switches with lateral cable outlet		
MMS 22-PI1-S-M8-PNP-SA	0301166	●
MMSK 22-PI1-S-PNP-SA	0301168	

ⓘ Two sensors (closer/S) are required for each unit, plus extension cables as an option. Please note the minimum permitted bending radii for the sensor cables, which are generally 35 mm. Connection cable, cable extensions, and sensor distributors can be found in the table for the MMS 22.

MMS PI2 programmable magnetic switches

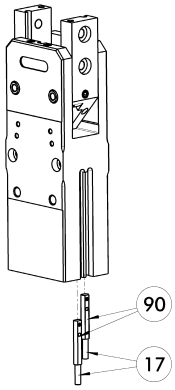

(17) Cable outlet
(90) MMS 22...-PI2-... sensor

Position query with two programmable positions per sensor and electronics integrated in sensor. Programmable via MT magnet teaching tool (included in the scope of delivery) or ST plug teaching tool (optional). Limit position query mounted in C-groove. If the ST plug teaching tools are listed in the table, teaching can only take place with the ST plug teaching tools.

Description	ID	Often combined
Plug teaching tool		
ST-MMS 22-PI2-PNP	0301026	
MMS PI2 programmable magnetic switches		
MMS 22-PI2-S-M8-PNP	0301180	●
MMSK 22-PI2-S-PNP	0301182	
MMS PI2-HD programmable magnetic switches with stainless steel housing		
MMS 22-PI2-S-M8-PNP-HD	0301130	●
MMSK 22-PI2-S-PNP-HD	0301132	

ⓘ Per unit one sensor (closer/S) is required, optionally a cable extension. Please note the minimum permitted bending radii for the sensor cables, which are generally 35 mm. Connection cable, cable extensions, and sensor distributors can be found in the table for the MMS-P 22.

MMS-P programmable magnetic switches

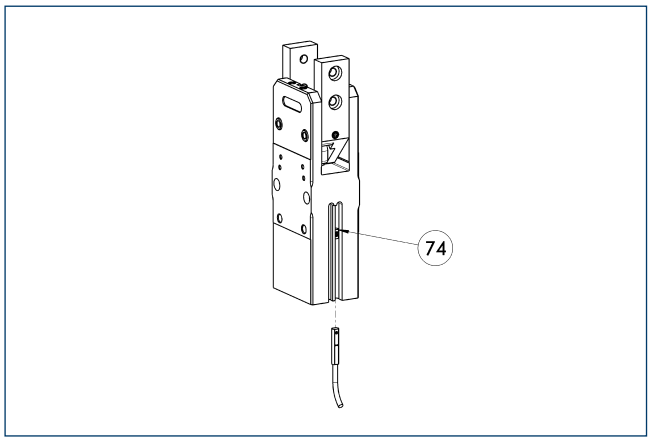

74 Stop for MMS-P

Position monitoring with two programmable positions per sensor. The end position monitoring is mounted in the C-slot.

Description	ID	Often combined
MMS-P programmable magnetic switches		
MMSK-P 22-S-PNP	0301371	
MMS-P 22-S-M8-PNP	0301370	●
Clip for plug / socket		
CLI-M8	0301463	
Connection cables		
KA BG08-L 4P-0500	0307767	●
KA BG08-L 4P-1000	0307768	
KA BW08-L 4P-0500	0307765	
KA BW08-L 4P-1000	0307766	
Sensor distributor		
V2-M8-4P-2XM8-3P	0301380	

ⓘ Per unit one sensor (closer/S) is required, optionally a cable extension. Please note the minimum permitted bending radii for the sensor cables, which are generally 35 mm.

PRG 42

SCHUNK Grippers pneumatic | 2-Finger Radial Grippers | Universal Gripper

Gripping force, O.D. gripping

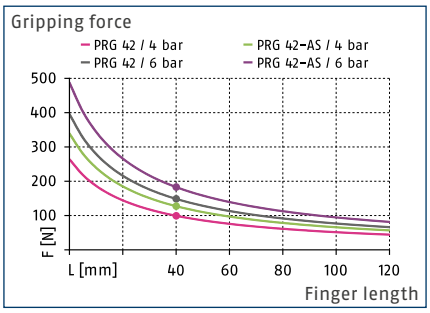

Max. admissible inertia J*

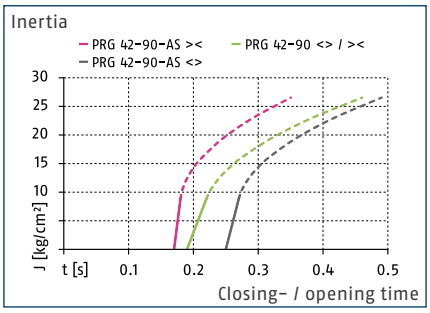

Finger load

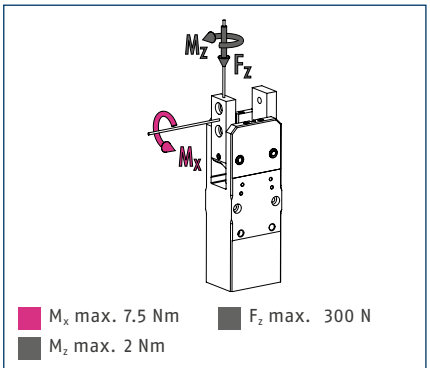

ⓘ The indicated moments and forces are statical values, apply for each base jaw and should not appear simultaneously. If the max. permitted finger weight is exceeded, it is impreative to throttle the air supply so that the jaw movement occurs without any hitting or bouncing. Service life may be reduced.

Technical data

Description		PRG 42-30	PRG 42-30-AS	PRG 42-60	PRG 42-60-AS	PRG 42-90	PRG 42-90-AS
ID		0303653	0303663	0303693	0303703	0303673	0303683
Opening angle per jaw	[°]	30	30	60	60	90	90
Closed angle per jaw up to	[°]	3	3	3	3	3	3
Closing moment		9.5	11.7	9.5	11.7	9.5	11.7
Spring-actuated closing moment	[Nm]		2.2		2.2		2.2
Weight	[kg]	0.41	0.43	0.41	0.43	0.41	0.43
Recommended workpiece weight	[kg]	0.76	0.76	0.76	0.76	0.76	0.76
Fluid consumption per double stroke	[cm³]	29	29	34	34	39	39
min. / max. operating pressure	[bar]	2/8	4/6.5	2/8	4/6.5	2/8	4/6.5
Nominal operating pressure	[bar]	6	6	6	6	6	6
Closing- / opening time	[s]	0.1/0.1	0.1/0.15	0.13/0.13	0.11/0.17	0.19/0.19	0.17/0.25
Closing- / opening time only with spring	[s]		0.10		0.21		0.32
max. permitted finger length	[mm]	80	80	80	80	80	80
max. mass moment of inertia per jaw*	[kgcm²]	8.85	8.85	8.85	8.85	8.85	8.85
IP class		20	20	20	20	20	20
min. / max. ambient temperature	[°C]	5/90	5/90	5/90	5/90	5/90	5/90
Repeat accuracy	[mm]	0.05	0.05	0.05	0.05	0.05	0.05
Options and their characteristics							
High-temperature version		39303653	39303663	39303693	39303703	39303673	39303683
min. / max. ambient temperature	[°C]	5/130	5/130	5/130	5/130	5/130	5/130

*The unit can be actuated without an external customized throttling at the given value of max. mass moment of inertia per jaw. In case of higher mass moments of inertia, an additional throttling is possible.
The curve applies for 90° versions. For other versions the curve must be parallely off-set according to the opening and closing times.
The specified closing moment is obtained at an opening angle of 0°. Closing moments for further angles can be read from the following diagram, closing moment to opening angle.

Main view

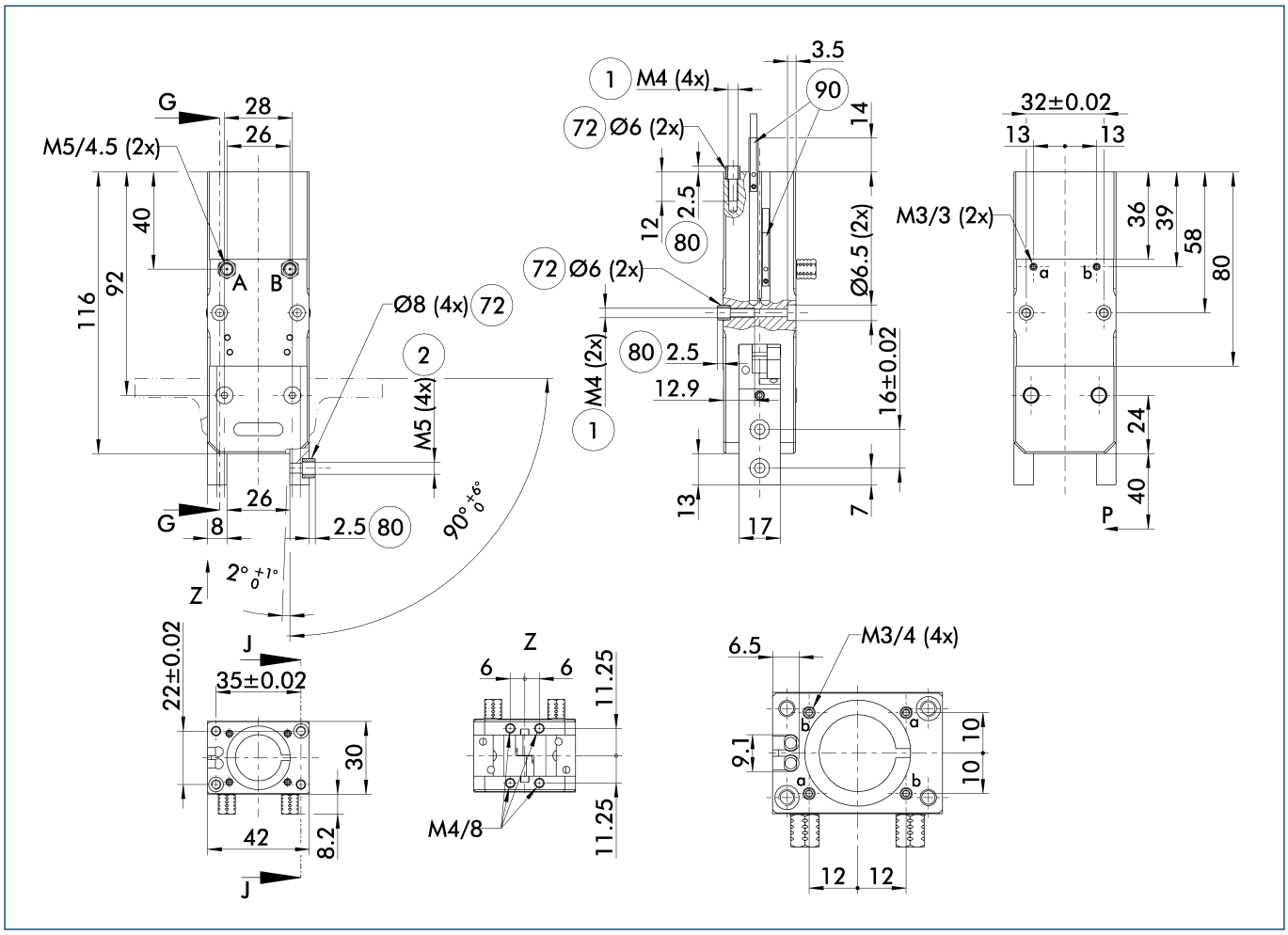

The drawing shows the gripper in the basic version with closed jaws, without dimensional consideration of the options described below.

ⓘ The SDV-P pressure maintenance valve can also be used for I.D. or O.D. gripping alternatively or in addition to the spring-loaded, mechanical gripping force maintenance device (see catalog section on "Accessories").

A, a Main / direct connection, gripper opening

B, b Main / direct connection, gripper closing

(1) Gripper connection

(2) Finger connection

(72) Fit for centering sleeves

(80) Depth of the centering sleeve hole in the mating part

(90) MMS 22... sensor

Closing torque curve**

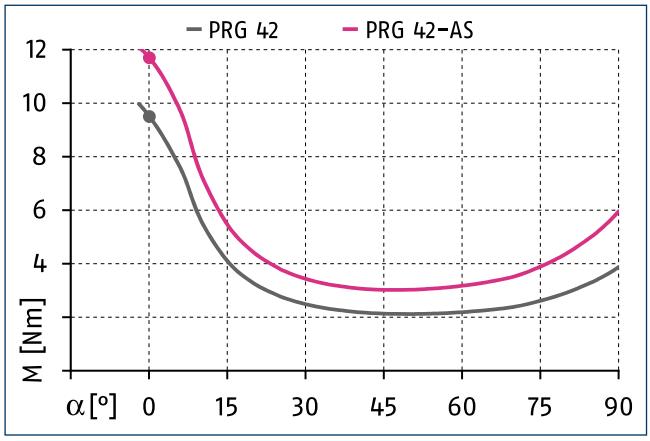

**The diagramm is valid for all opening angle variants.

Maximum permitted finger projection

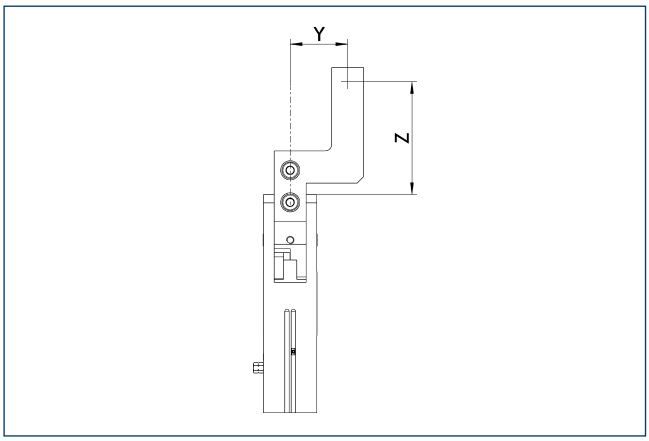

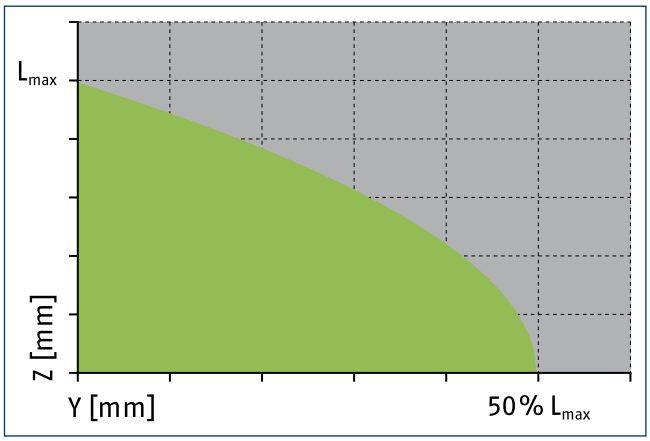

Permitted range Inadmissible range

L_{max} is equivalent to the maximum permitted finger length, see the chart of technical specifications.

Hose-free direct connection M3

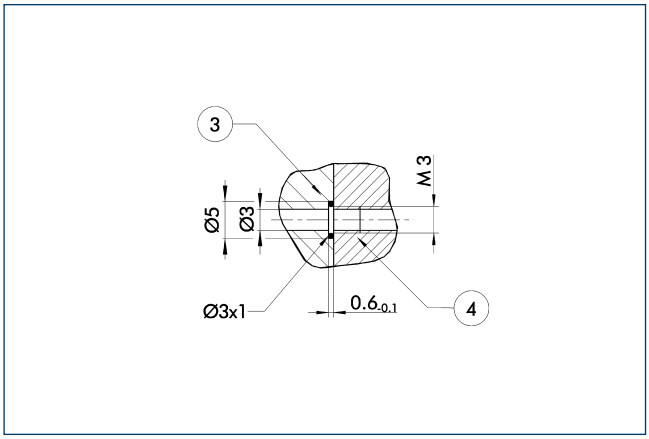

(3) Adapter (4) Gripper

The direct connection is used for supplying compressed air without hoses. Instead, the pressure medium is fed through bore-holes in the mounting plate.

Finger design

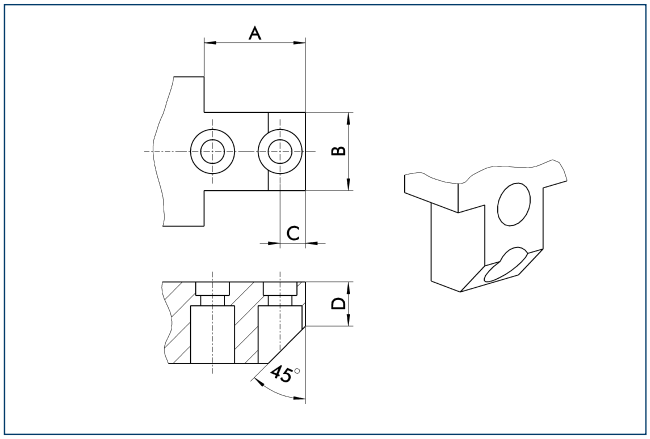

The drawing shows one posibility to design the gripper fingers.

A	B	C	D
[mm]	[mm]	[mm]	[mm]
14	16.5	6.5	12

SDV-P pressure maintenance valve

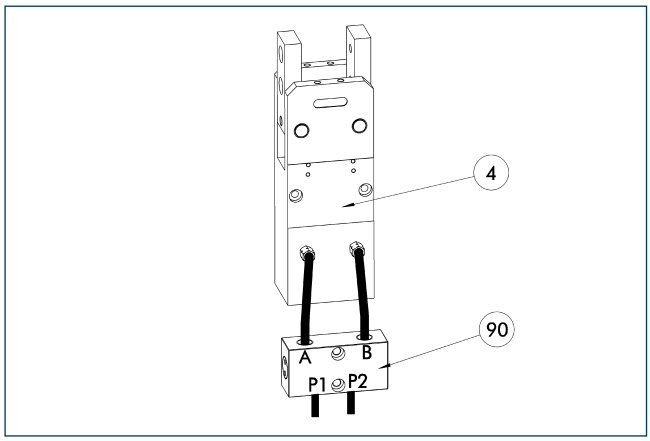

(4) Gripper

(90) SDV-P pressure maintenance valve

The SDV-P pressure maintenance valves ensure that the pressure in the piston chamber of pneumatic gripping, rotary, linear, and quick-change modules is maintained temporarily during an emergency stop.

Description	ID	
Pressure maintenance valve		
SDV-P 04	0403130	

Mounting kit for IN 40 proximity switches

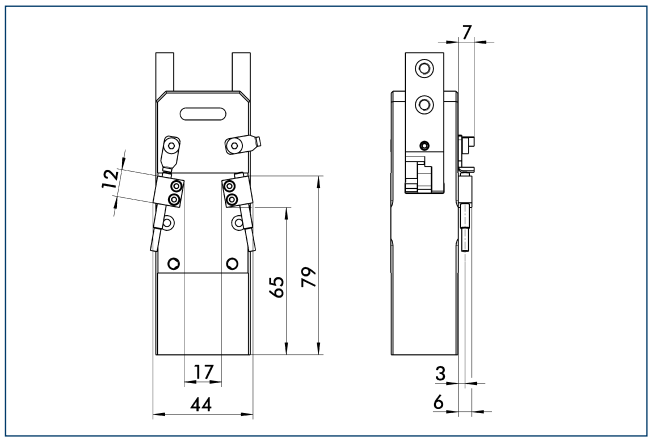

The mounting kit consists of brackets, control cams and appropriate fastening materials. Proximity switches have to be ordered separately.

Description	ID	
Mounting kit for proximity switch		
AS-PRG 42-IN40	0303623	

ⓘ This mounting kit needs to be ordered optionally as an accessory.

IN 40 inductive proximity switches

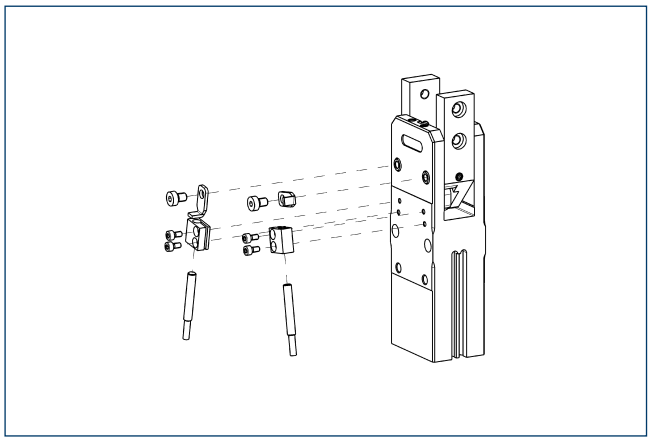

Limit position monitor can be mounted with mounting kit.

Description	ID	Often combined
Mounting kit for proximity switch		
AS-PRG 42-IN40	0303623	
Inductive proximity switches		
IN 40-S-M12	0301574	
IN 40-S-M8	0301474	●
INK 40-S	0301555	
Cable extensions		
KV BG12-SG12 3P-0030-PNP	0301999	
KV BG12-SG12 3P-0060-PNP	0301998	
KV BW08-SG08 3P-0030-PNP	0301495	
KV BW08-SG08 3P-0100-PNP	0301496	
KV BW08-SG08 3P-0200-PNP	0301497	●
KV BW12-SG12 3P-0030-PNP	0301595	
KV BW12-SG12 3P-0100-PNP	0301596	
KV BW12-SG12 3P-0200-PNP	0301597	
Clip for plug / socket		
CLI-M12	0301464	
CLI-M8	0301463	
Connection cables		
KA BG08-L 3P-0300-PNP	0301622	●
KA BG08-L 3P-0500-PNP	0301623	
KA BG12-L 3P-0500-PNP	30016369	
KA BW08-L 3P-0300-PNP	0301594	
KA BW08-L 3P-0500-PNP	0301502	
KA BW12-L 3P-0300-PNP	0301503	
KA BW12-L 3P-0500-PNP	0301507	
Sensor distributor		
V2-M8	0301775	●
V2-M12	0301776	●
V4-M12	0301747	
V4-M8	0301746	
V8-M12	0301752	
V8-M8	0301751	

ⓘ Two sensors (closer/S) are required for each unit, plus extension cables as an option. This mounting kit needs to be ordered optionally as an accessory. Please note the minimum permitted bending radii for the sensor cables, which are generally 35 mm.

Mounting kit for IN 80 proximity switches

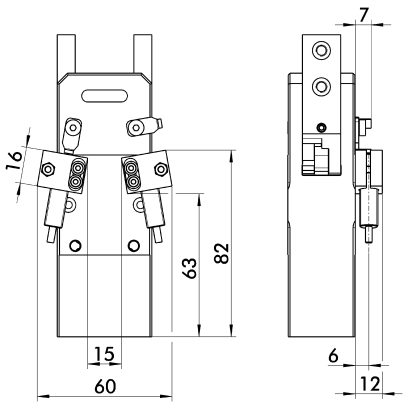

The mounting kit consists of brackets, control cams and appropriate fastening materials. Proximity switches have to be ordered separately.

Description	ID	
Mounting kit for proximity switch		
AS-PRG 42-IN80	0304134	

ⓘ This mounting kit needs to be ordered optionally as an accessory.

IN 80 inductive proximity switches

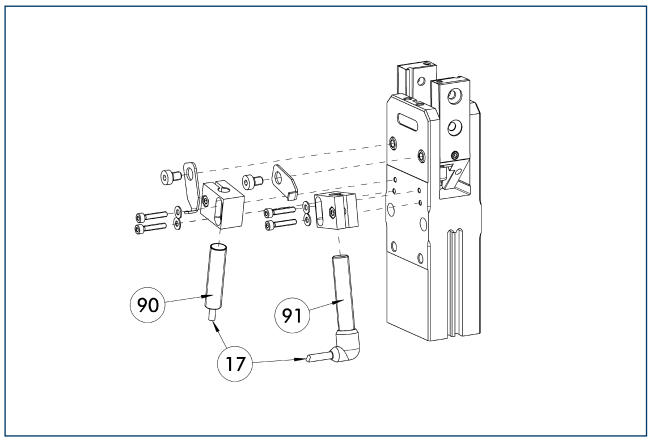

(17) Cable outlet
(91) IN ...-SA sensor
(90) IN ... sensor

Limit position monitor can be mounted with mounting kit.

Description	ID	Often combined
Mounting kit for proximity switch		
AS-PRG 42-IN80	0304134	
Inductive proximity switches		
IN 80-S-M12	0301578	
IN 80-S-M8	0301478	●
INK 80-S	0301550	
Inductive proximity switches with lateral outlet		
IN 80-S-M12-SA	0301587	
IN 80-S-M8-SA	0301483	●
INK 80-S-SA	0301566	
Cable extensions		
KV BG12-SG12 3P-0030-PNP	0301999	
KV BG12-SG12 3P-0060-PNP	0301998	
KV BW08-SG08 3P-0030-PNP	0301495	
KV BW08-SG08 3P-0100-PNP	0301496	
KV BW08-SG08 3P-0200-PNP	0301497	●
KV BW12-SG12 3P-0030-PNP	0301595	
KV BW12-SG12 3P-0100-PNP	0301596	
KV BW12-SG12 3P-0200-PNP	0301597	
Clip for plug / socket		
CLI-M12	0301464	
CLI-M8	0301463	
Connection cables		
KA BG08-L 3P-0300-PNP	0301622	●
KA BG08-L 3P-0500-PNP	0301623	
KA BG12-L 3P-0500-PNP	30016369	
KA BW08-L 3P-0300-PNP	0301594	
KA BW08-L 3P-0500-PNP	0301502	
KA BW12-L 3P-0300-PNP	0301503	
KA BW12-L 3P-0500-PNP	0301507	
Sensor distributor		
V2-M8	0301775	●
V2-M12	0301776	●

ⓘ Two sensors (closer/S) are required for each unit, plus extension cables as an option. This mounting kit needs to be ordered optionally as an accessory. Please note the minimum permitted bending radii for the sensor cables, which are generally 35 mm.

MMS electronic magnetic switches

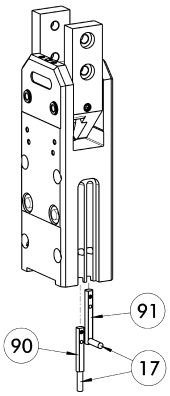

(17) Cable outlet
(91) MMS 22...-SA sensor
(90) MMS 22... sensor

End position monitoring for mounting in the C-slot.

Description	ID	Often combined
MMS electronic magnetic switches		
MMS 22-S-M8-PNP	0301032	●
MMSK 22-S-PNP	0301034	
MMS electronic magnetic switches with lateral cable outlet		
MMS 22-S-M8-PNP-SA	0301042	●
MMSK 22-S-PNP-SA	0301044	
Reed switches		
RMS 22-S-M8	0377720	●
Cable extensions		
KV BW08-SG08 3P-0030-PNP	0301495	
KV BW08-SG08 3P-0100-PNP	0301496	
KV BW08-SG08 3P-0200-PNP	0301497	●
Clip for plug / socket		
CLI-M8	0301463	
Connection cables		
KA BG08-L 3P-0300-PNP	0301622	●
KA BG08-L 3P-0500-PNP	0301623	
KA BW08-L 3P-0300-PNP	0301594	
KA BW08-L 3P-0500-PNP	0301502	
RSS radio sensor system		
RSS-T2	0377710	
Sensor distributor		
V2-M8	0301775	●
V4-M8	0301746	
V8-M8	0301751	

ⓘ Two sensors (closer/S) are required for each unit, plus extension cables as an option. Please note the minimum permitted bending radii for the sensor cables, which are generally 35 mm.

MMS PI1 programmable magnetic switches

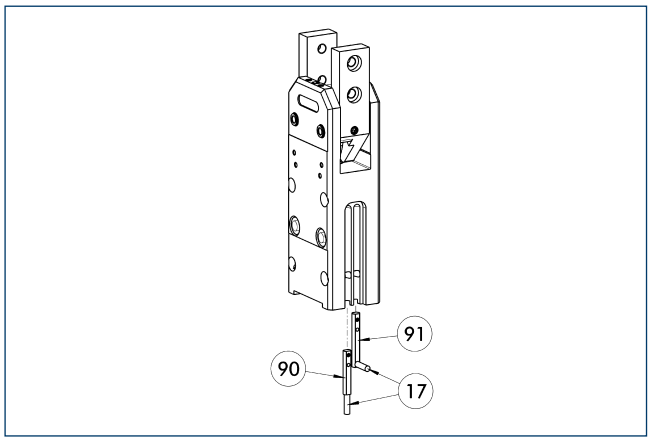

(17) Cable outlet
(91) MMS 22...-PI1-...-SA sensor
(90) MMS 22...-PI1-... sensor

Position query with one programmable position per sensor and electronics integrated in sensor. Programmable via MT magnet teaching tool (included in the scope of delivery) or ST plug teaching tool (optional). Limit position query mounted in C-groove. If the ST plug teaching tools are listed in the table, teaching can only take place with the ST plug teaching tools.

Description	ID	Often combined
Plug teaching tool		
ST-MMS 22-PI1-PNP	0301025	
MMS PI1 programmable magnetic switches		
MMS 22-PI1-S-M8-PNP	0301160	●
MMSK 22-PI1-S-PNP	0301162	
MMS PI1-HD programmable magnetic switches with stainless steel housing		
MMS 22-PI1-S-M8-PNP-HD	0301110	●
MMSK 22-PI1-S-PNP-HD	0301112	
MMS PI1 programmable magnetic switches with lateral cable outlet		
MMS 22-PI1-S-M8-PNP-SA	0301166	●
MMSK 22-PI1-S-PNP-SA	0301168	

ⓘ Two sensors (closer/S) are required for each unit, plus extension cables as an option. Please note the minimum permitted bending radii for the sensor cables, which are generally 35 mm. Connection cable, cable extensions, and sensor distributors can be found in the table for the MMS 22.

MMS PI2 programmable magnetic switches

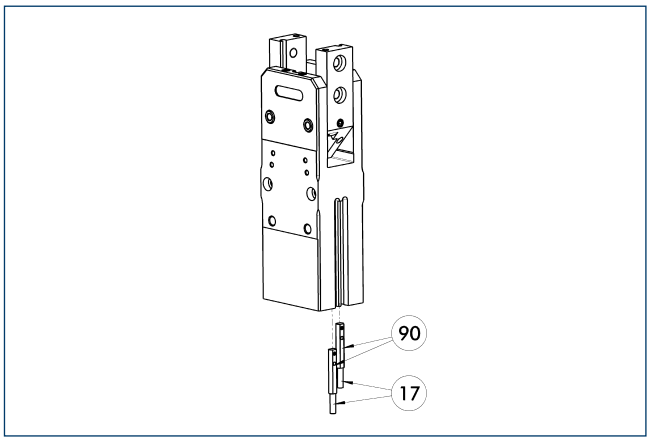

(17) Cable outlet
(90) MMS 22...-PI2-... sensor

Position query with two programmable positions per sensor and electronics integrated in sensor. Programmable via MT magnet teaching tool (included in the scope of delivery) or ST plug teaching tool (optional). Limit position query mounted in C-groove. If the ST plug teaching tools are listed in the table, teaching can only take place with the ST plug teaching tools.

Description	ID	Often combined
Plug teaching tool		
ST-MMS 22-PI2-PNP	0301026	
MMS PI2 programmable magnetic switches		
MMS 22-PI2-S-M8-PNP	0301180	●
MMSK 22-PI2-S-PNP	0301182	
MMS PI2-HD programmable magnetic switches with stainless steel housing		
MMS 22-PI2-S-M8-PNP-HD	0301130	●
MMSK 22-PI2-S-PNP-HD	0301132	

ⓘ Per unit one sensor (closer/S) is required, optionally a cable extension. Please note the minimum permitted bending radii for the sensor cables, which are generally 35 mm. Connection cable, cable extensions, and sensor distributors can be found in the table for the MMS-P 22.

MMS-P programmable magnetic switches

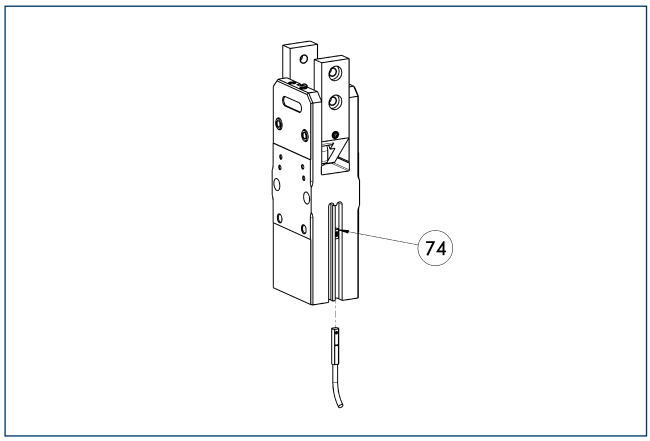

74 Stop for MMS-P

Position monitoring with two programmable positions per sensor. The end position monitoring is mounted in the C-slot.

Description	ID	Often combined
MMS-P programmable magnetic switches		
MMSK-P 22-S-PNP	0301371	
MMS-P 22-S-M8-PNP	0301370	●
Clip for plug / socket		
CLI-M8	0301463	
Connection cables		
KA BG08-L 4P-0500	0307767	●
KA BG08-L 4P-1000	0307768	
KA BW08-L 4P-0500	0307765	
KA BW08-L 4P-1000	0307766	
Sensor distributor		
V2-M8-4P-2XM8-3P	0301380	

ⓘ Per unit one sensor (closer/S) is required, optionally a cable extension. Please note the minimum permitted bending radii for the sensor cables, which are generally 35 mm.

PRG 52

SCHUNK Grippers pneumatic | 2-Finger Radial Grippers | Universal Gripper

Gripping force, O.D. gripping

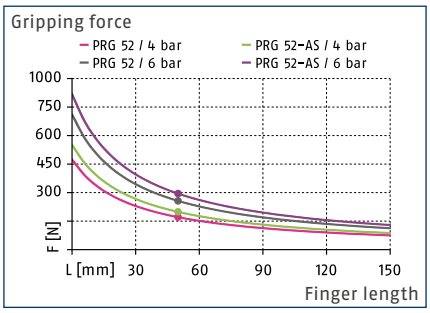

Max. admissible inertia J*

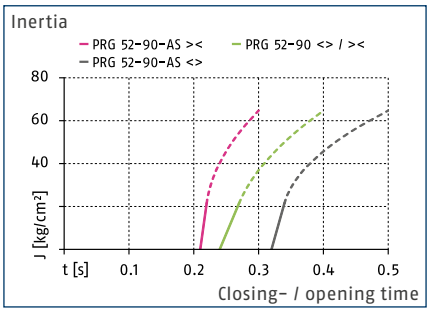

Finger load

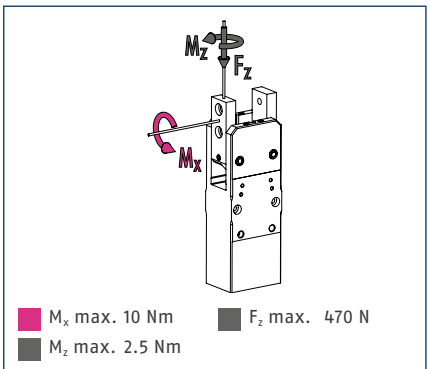

ⓘ The indicated moments and forces are statical values, apply for each base jaw and should not appear simultaneously. If the max. permitted finger weight is exceeded, it is impreative to throttle the air supply so that the jaw movement occurs without any hitting or bouncing. Service life may be reduced.

Technical data

Description		PRG 52-30	PRG 52-30-AS	PRG 52-60	PRG 52-60-AS	PRG 52-90	PRG 52-90-AS
ID		0303654	0303664	0303694	0303704	0303674	0303684
Opening angle per jaw	[°]	30	30	60	60	90	90
Closed angle per jaw up to	[°]	3	3	3	3	3	3
Closing moment		20	23	20	23	20	23
Spring-actuated closing moment	[Nm]		3		3		3
Weight	[kg]	0.77	0.8	0.76	0.8	0.75	0.79
Recommended workpiece weight	[kg]	1.3	1.3	1.3	1.3	1.3	1.3
Fluid consumption per double stroke	[cm³]	52	52	61	61	72	72
min. / max. operating pressure	[bar]	2/8	4/6.5	2/8	4/6.5	2/8	4/6.5
Nominal operating pressure	[bar]	6	6	6	6	6	6
Closing- / opening time	[s]	0.11/0.11	0.12/0.18	0.19/0.19	0.19/0.25	0.24/0.24	0.21/0.32
Closing- / opening time only with spring	[s]		0.13		0.25		0.37
max. permitted finger length	[mm]	100	100	100	100	100	100
max. mass moment of inertia per jaw*	[kgcm²]	21.55	21.55	21.55	21.55	21.55	21.55
IP class		20	20	20	20	20	20
min. / max. ambient temperature	[°C]	5/90	5/90	5/90	5/90	5/90	5/90
Repeat accuracy	[mm]	0.05	0.05	0.05	0.05	0.05	0.05
Options and their characteristics							
High-temperature version		39303654	39303664	39303694	39303704	39303674	39303684
min. / max. ambient temperature	[°C]	5/130	5/130	5/130	5/130	5/130	5/130

*The unit can be actuated without an external customized throttling at the given value of max. mass moment of inertia per jaw. In case of higher mass moments of inertia, an additional throttling is possible.
The curve applies for 90° versions. For other versions the curve must be parallely off-set according to the opening and closing times.
The specified closing moment is obtained at an opening angle of 0°. Closing moments for further angles can be read from the following diagram, closing moment to opening angle.

Main view

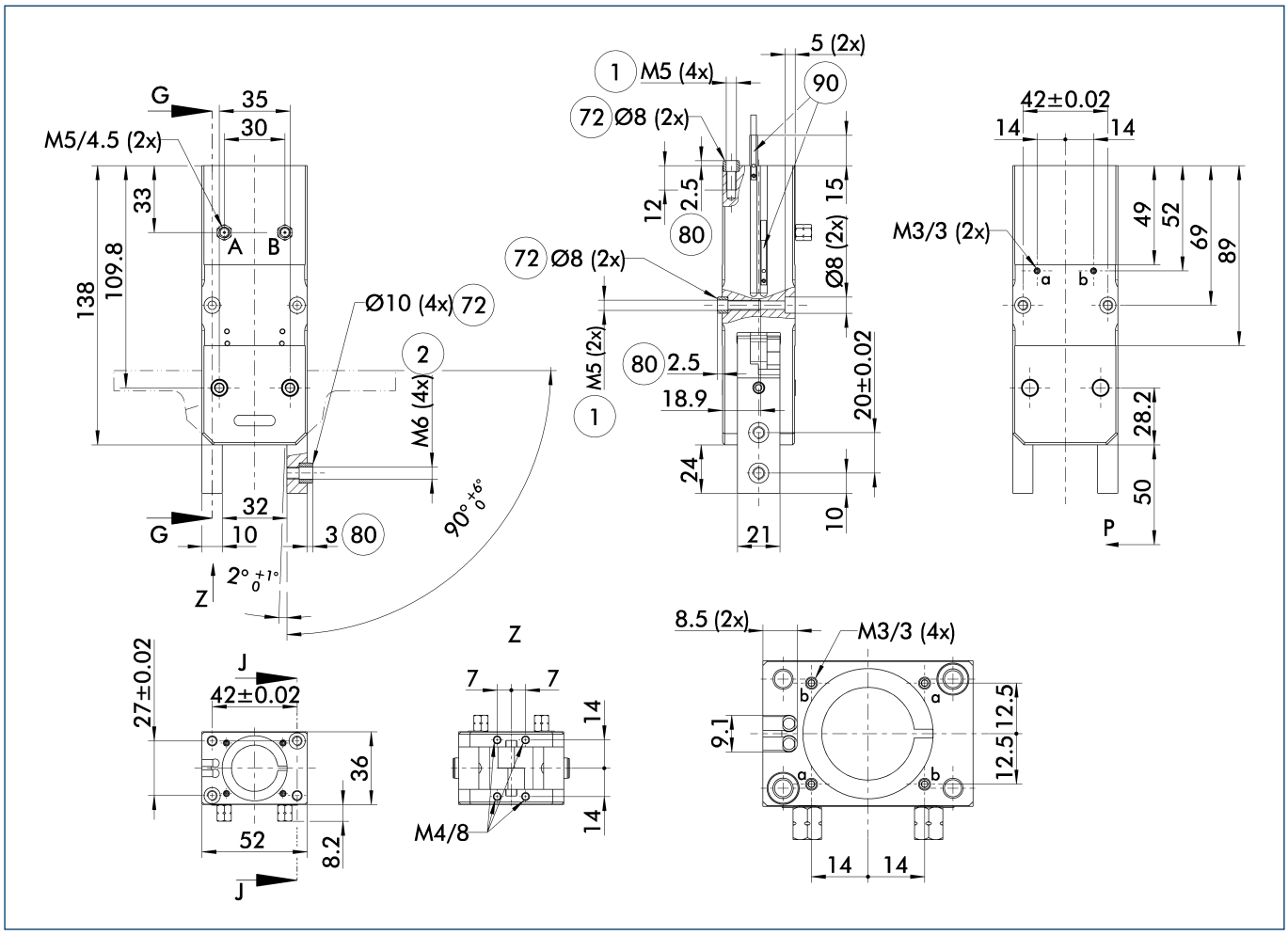

The drawing shows the gripper in the basic version with closed jaws, without dimensional consideration of the options described below.

ⓘ The SDV-P pressure maintenance valve can also be used for I.D. or O.D. gripping alternatively or in addition to the spring-loaded, mechanical gripping force maintenance device (see catalog section on "Accessories").

A, a Main / direct connection, gripper opening

B, b Main / direct connection, gripper closing

(1) Gripper connection

(2) Finger connection

(72) Fit for centering sleeves

(80) Depth of the centering sleeve hole in the mating part

(90) MMS 22... sensor

Closing torque curve**

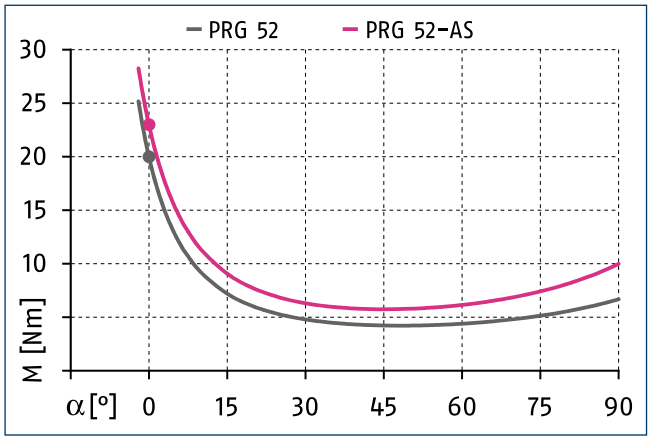

**The diagramm is valid for all opening angle variants.

Maximum permitted finger projection

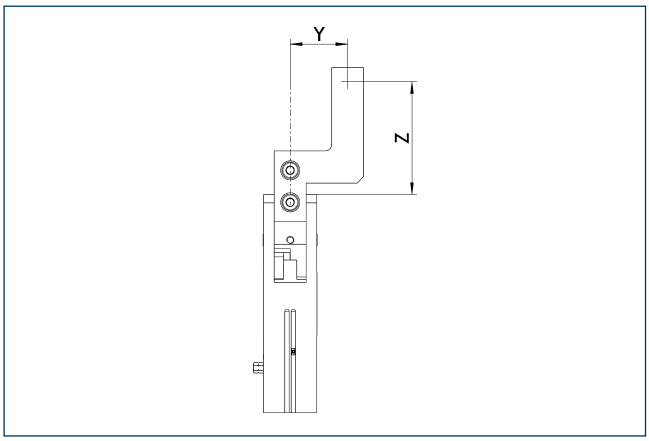

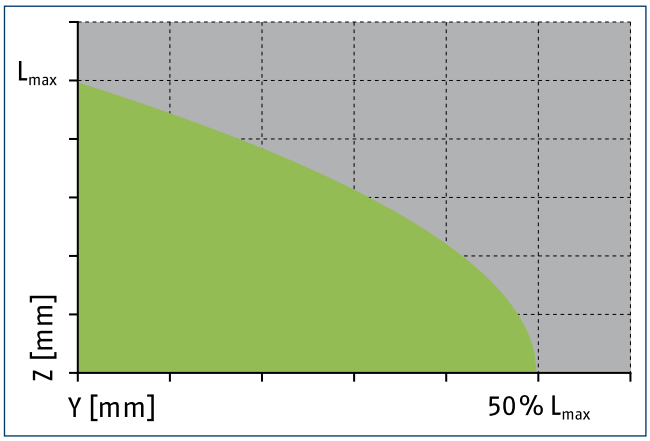

Permitted range Inadmissible range

L_{max} is equivalent to the maximum permitted finger length, see the chart of technical specifications.

Hose-free direct connection M3

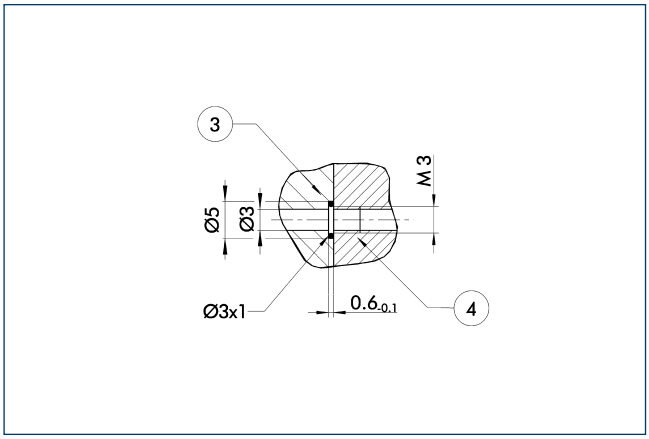

(3) Adapter (4) Gripper

The direct connection is used for supplying compressed air without hoses. Instead, the pressure medium is fed through bore-holes in the mounting plate.

Finger design

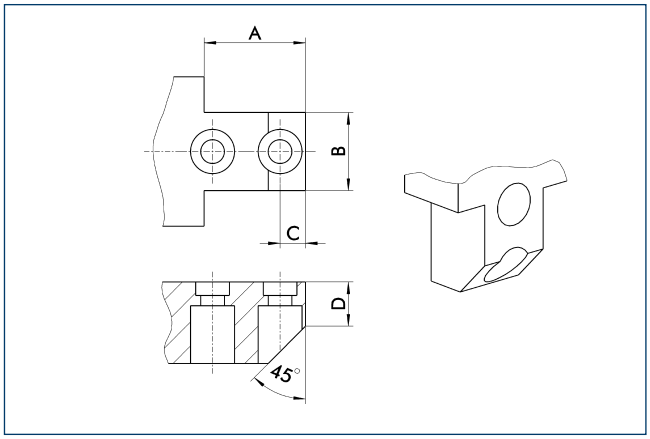

The drawing shows one posibility to design the gripper fingers.

A	B	C	D
[mm]	[mm]	[mm]	[mm]
16	20.5	8	14

SDV-P pressure maintenance valve

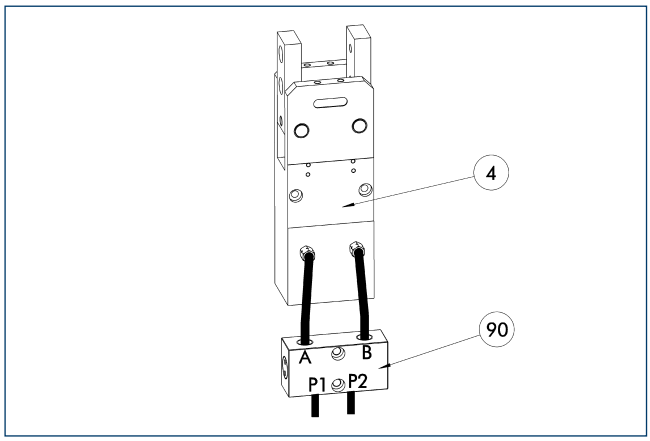

(4) Gripper

(90) SDV-P pressure maintenance valve

The SDV-P pressure maintenance valves ensure that the pressure in the piston chamber of pneumatic gripping, rotary, linear, and quick-change modules is maintained temporarily during an emergency stop.

Description	ID	
Pressure maintenance valve		
SDV-P 04	0403130	

Mounting kit for IN 40 proximity switches

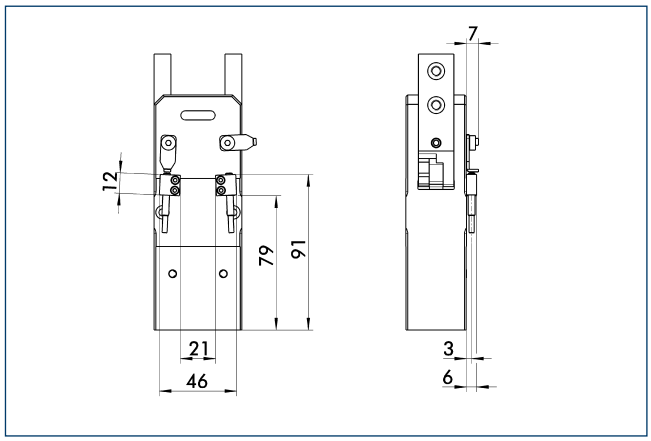

The mounting kit consists of brackets, control cams and appropriate fastening materials. Proximity switches have to be ordered separately.

Description	ID	
Mounting kit for proximity switch		
AS-PRG 52-IN40	0303624	

ⓘ This mounting kit needs to be ordered optionally as an accessory.

IN 40 inductive proximity switches

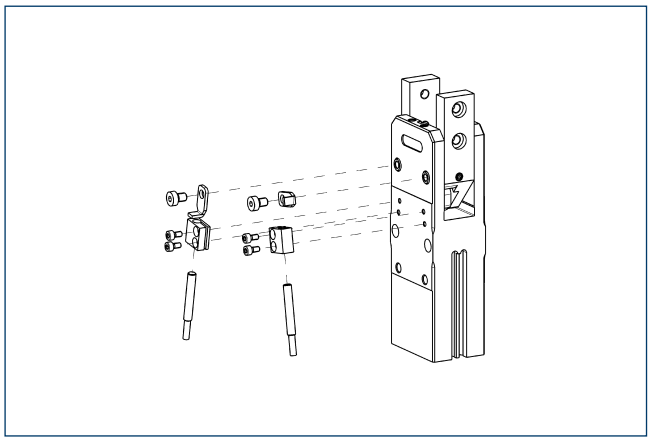

Limit position monitor can be mounted with mounting kit.

Description	ID	Often combined
Mounting kit for proximity switch		
AS-PRG 52-IN40	0303624	
Inductive proximity switches		
IN 40-S-M12	0301574	
IN 40-S-M8	0301474	●
INK 40-S	0301555	
Cable extensions		
KV BG12-SG12 3P-0030-PNP	0301999	
KV BG12-SG12 3P-0060-PNP	0301998	
KV BW08-SG08 3P-0030-PNP	0301495	
KV BW08-SG08 3P-0100-PNP	0301496	
KV BW08-SG08 3P-0200-PNP	0301497	●
KV BW12-SG12 3P-0030-PNP	0301595	
KV BW12-SG12 3P-0100-PNP	0301596	
KV BW12-SG12 3P-0200-PNP	0301597	
Clip for plug / socket		
CLI-M12	0301464	
CLI-M8	0301463	
Connection cables		
KA BG08-L 3P-0300-PNP	0301622	●
KA BG08-L 3P-0500-PNP	0301623	
KA BG12-L 3P-0500-PNP	30016369	
KA BW08-L 3P-0300-PNP	0301594	
KA BW08-L 3P-0500-PNP	0301502	
KA BW12-L 3P-0300-PNP	0301503	
KA BW12-L 3P-0500-PNP	0301507	
Sensor distributor		
V2-M8	0301775	●
V2-M12	0301776	●
V4-M12	0301747	
V4-M8	0301746	
V8-M12	0301752	
V8-M8	0301751	

Two sensors (closer/S) are required for each unit, plus extension cables as an option. This mounting kit needs to be ordered optionally as an accessory. Please note the minimum permitted bending radii for the sensor cables, which are generally 35 mm.

Mounting kit for IN 80 proximity switches

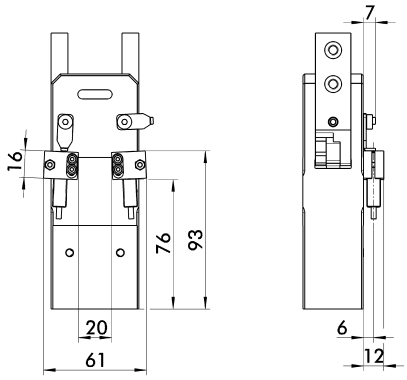

The mounting kit consists of brackets, control cams and appropriate fastening materials. Proximity switches have to be ordered separately.

Description	ID	
Mounting kit for proximity switch		
AS-PRG 52-IN80	0304135	

ⓘ This mounting kit needs to be ordered optionally as an accessory.

IN 80 inductive proximity switches

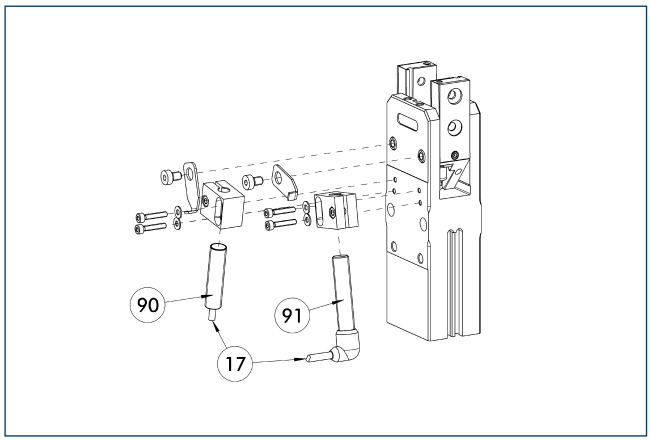

(17) Cable outlet
(91) IN ...-SA sensor
(90) IN ... sensor

Limit position monitor can be mounted with mounting kit.

Description	ID	Often combined
Mounting kit for proximity switch		
AS-PRG 52-IN80	0304135	
Inductive proximity switches		
IN 80-S-M12	0301578	
IN 80-S-M8	0301478	●
INK 80-S	0301550	
Inductive proximity switches with lateral outlet		
IN 80-S-M12-SA	0301587	
IN 80-S-M8-SA	0301483	●
INK 80-S-SA	0301566	
Cable extensions		
KV BG12-SG12 3P-0030-PNP	0301999	
KV BG12-SG12 3P-0060-PNP	0301998	
KV BW08-SG08 3P-0030-PNP	0301495	
KV BW08-SG08 3P-0100-PNP	0301496	
KV BW08-SG08 3P-0200-PNP	0301497	●
KV BW12-SG12 3P-0030-PNP	0301595	
KV BW12-SG12 3P-0100-PNP	0301596	
KV BW12-SG12 3P-0200-PNP	0301597	
Clip for plug / socket		
CLI-M12	0301464	
CLI-M8	0301463	
Connection cables		
KA BG08-L 3P-0300-PNP	0301622	●
KA BG08-L 3P-0500-PNP	0301623	
KA BG12-L 3P-0500-PNP	30016369	
KA BW08-L 3P-0300-PNP	0301594	
KA BW08-L 3P-0500-PNP	0301502	
KA BW12-L 3P-0300-PNP	0301503	
KA BW12-L 3P-0500-PNP	0301507	
Sensor distributor		
V2-M8	0301775	●
V2-M12	0301776	●

ⓘ Two sensors (closer/S) are required for each unit, plus extension cables as an option. This mounting kit needs to be ordered optionally as an accessory. Please note the minimum permitted bending radii for the sensor cables, which are generally 35 mm.

MMS electronic magnetic switches

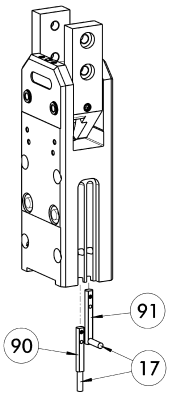

(17) Cable outlet
(91) MMS 22...-SA sensor
(90) MMS 22... sensor

End position monitoring for mounting in the C-slot.

Description	ID	Often combined
MMS electronic magnetic switches		
MMS 22-S-M8-PNP	0301032	●
MMSK 22-S-PNP	0301034	
MMS electronic magnetic switches with lateral cable outlet		
MMS 22-S-M8-PNP-SA	0301042	●
MMSK 22-S-PNP-SA	0301044	
Reed switches		
RMS 22-S-M8	0377720	●
Cable extensions		
KV BW08-SG08 3P-0030-PNP	0301495	
KV BW08-SG08 3P-0100-PNP	0301496	
KV BW08-SG08 3P-0200-PNP	0301497	●
Clip for plug / socket		
CLI-M8	0301463	
Connection cables		
KA BG08-L 3P-0300-PNP	0301622	●
KA BG08-L 3P-0500-PNP	0301623	
KA BW08-L 3P-0300-PNP	0301594	
KA BW08-L 3P-0500-PNP	0301502	
RSS radio sensor system		
RSS-T2	0377710	
Sensor distributor		
V2-M8	0301775	●
V4-M8	0301746	
V8-M8	0301751	

ⓘ Two sensors (closer/S) are required for each unit, plus extension cables as an option. Please note the minimum permitted bending radii for the sensor cables, which are generally 35 mm.

MMS PI1 programmable magnetic switches

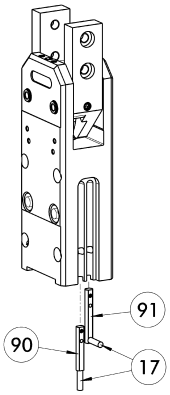

(17) Cable outlet
(91) MMS 22...-PI1-...-SA sensor
(90) MMS 22...-PI1-... sensor

Position query with one programmable position per sensor and electronics integrated in sensor. Programmable via MT magnet teaching tool (included in the scope of delivery) or ST plug teaching tool (optional). Limit position query mounted in C-groove. If the ST plug teaching tools are listed in the table, teaching can only take place with the ST plug teaching tools.

Description	ID	Often combined
Plug teaching tool		
ST-MMS 22-PI1-PNP	0301025	
MMS PI1 programmable magnetic switches		
MMS 22-PI1-S-M8-PNP	0301160	●
MMSK 22-PI1-S-PNP	0301162	
MMS PI1-HD programmable magnetic switches with stainless steel housing		
MMS 22-PI1-S-M8-PNP-HD	0301110	●
MMSK 22-PI1-S-PNP-HD	0301112	
MMS PI1 programmable magnetic switches with lateral cable outlet		
MMS 22-PI1-S-M8-PNP-SA	0301166	●
MMSK 22-PI1-S-PNP-SA	0301168	

ⓘ Two sensors (closer/S) are required for each unit, plus extension cables as an option. Please note the minimum permitted bending radii for the sensor cables, which are generally 35 mm. Connection cable, cable extensions, and sensor distributors can be found in the table for the MMS 22.

MMS PI2 programmable magnetic switches

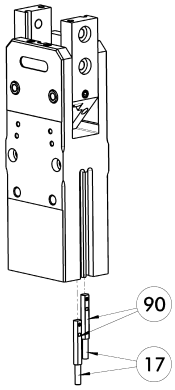

(17) Cable outlet
(90) MMS 22...-PI2-... sensor

Position query with two programmable positions per sensor and electronics integrated in sensor. Programmable via MT magnet teaching tool (included in the scope of delivery) or ST plug teaching tool (optional). Limit position query mounted in C-groove. If the ST plug teaching tools are listed in the table, teaching can only take place with the ST plug teaching tools.

Description	ID	Often combined
Plug teaching tool		
ST-MMS 22-PI2-PNP	0301026	
MMS PI2 programmable magnetic switches		
MMS 22-PI2-S-M8-PNP	0301180	●
MMSK 22-PI2-S-PNP	0301182	
MMS PI2-HD programmable magnetic switches with stainless steel housing		
MMS 22-PI2-S-M8-PNP-HD	0301130	●
MMSK 22-PI2-S-PNP-HD	0301132	

ⓘ Per unit one sensor (closer/S) is required, optionally a cable extension. Please note the minimum permitted bending radii for the sensor cables, which are generally 35 mm. Connection cable, cable extensions, and sensor distributors can be found in the table for the MMS-P 22.

MMS-P programmable magnetic switches

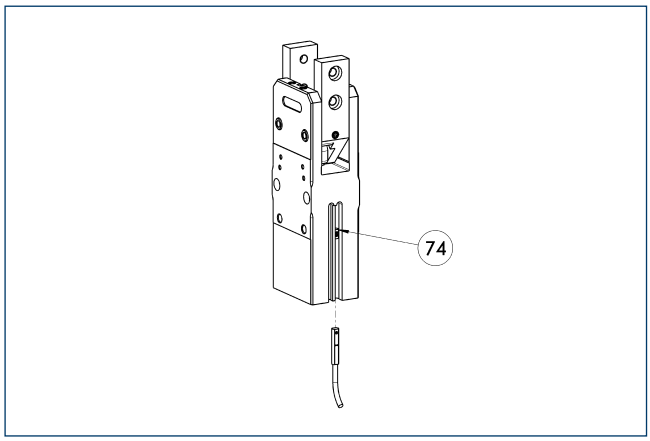

74 Stop for MMS-P

Position monitoring with two programmable positions per sensor. The end position monitoring is mounted in the C-slot.

Description	ID	Often combined
MMS-P programmable magnetic switches		
MMSK-P 22-S-PNP	0301371	
MMS-P 22-S-M8-PNP	0301370	●
Clip for plug / socket		
CLI-M8	0301463	
Connection cables		
KA BG08-L 4P-0500	0307767	●
KA BG08-L 4P-1000	0307768	
KA BW08-L 4P-0500	0307765	
KA BW08-L 4P-1000	0307766	
Sensor distributor		
V2-M8-4P-2XM8-3P	0301380	

ⓘ Per unit one sensor (closer/S) is required, optionally a cable extension. Please note the minimum permitted bending radii for the sensor cables, which are generally 35 mm.

PRG 64

SCHUNK Grippers pneumatic | 2-Finger Radial Grippers | Universal Gripper

Gripping force, O.D. gripping

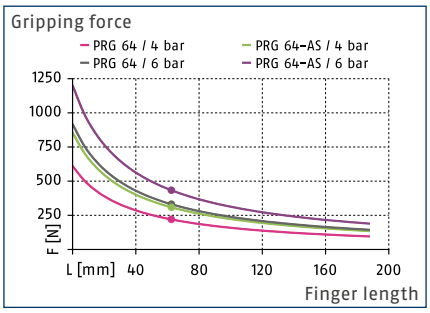

Max. admissible inertia J*

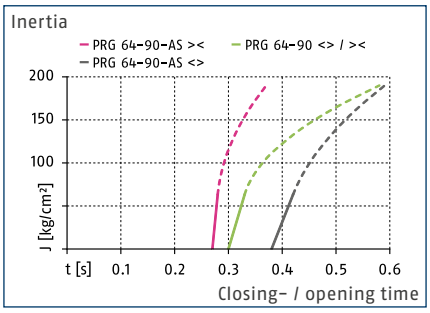

Finger load

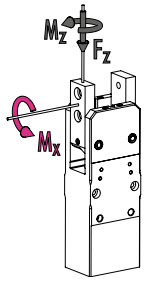

M_x max. 13.5 Nm F_z max. 660 N

M_z max. 3 Nm

ⓘ The indicated moments and forces are statical values, apply for each base jaw and should not appear simultaneously. If the max. permitted finger weight is exceeded, it is impreative to throttle the air supply so that the jaw movement occurs without any hitting or bouncing. Service life may be reduced.

Technical data

Description		PRG 64-30	PRG 64-30-AS	PRG 64-60	PRG 64-60-AS	PRG 64-90	PRG 64-90-AS
ID		0303655	0303665	0303695	0303705	0303675	0303685
Opening angle per jaw	[°]	30	30	60	60	90	90
Closed angle per jaw up to	[°]	3	3	3	3	3	3
Closing moment	[Nm]	32.5	42.5	32.5	42.5	32.5	42.5
Spring-actuated closing moment	[Nm]		10		10		10
Weight	[kg]	1.35	1.42	1.34	1.41	1.33	1.4
Recommended workpiece weight	[kg]	1.69	1.69	1.69	1.69	1.69	1.69
Fluid consumption per double stroke	[cm³]	88	88	102	102	120	120
min. / max. operating pressure	[bar]	2/8	4/6.5	2/8	4/6.5	2/8	4/6.5
Nominal operating pressure	[bar]	6	6	6	6	6	6
Closing- / opening time	[s]	0.22/0.22	0.21/0.29	0.3/0.3	0.27/0.38	0.38/0.38	0.37/0.47
Closing- / opening time only with spring	[s]		0.14		0.28		0.42
max. permitted finger length	[mm]	125	125	125	125	125	125
max. mass moment of inertia per jaw*	[kgcm²]	63.37	63.37	63.37	63.37	63.37	63.37
IP class		20	20	20	20	20	20
min. / max. ambient temperature	[°C]	5/90	5/90	5/90	5/90	5/90	5/90
Repeat accuracy	[mm]	0.05	0.05	0.05	0.05	0.05	0.05
Options and their characteristics							
High-temperature version		39303655	39303665	39303695	39303705	39303675	39303685
min. / max. ambient temperature	[°C]	5/130	5/130	5/130	5/130	5/130	5/130

*The unit can be actuated without an external customized throttling at the given value of max. mass moment of inertia per jaw. In case of higher mass moments of inertia, an additional throttling is possible.
The curve applies for 90° versions. For other versions the curve must be parallely off-set according to the opening and closing times.
The specified closing moment is obtained at an opening angle of 0°. Closing moments for further angles can be read from the following diagram, closing moment to opening angle.

Main view

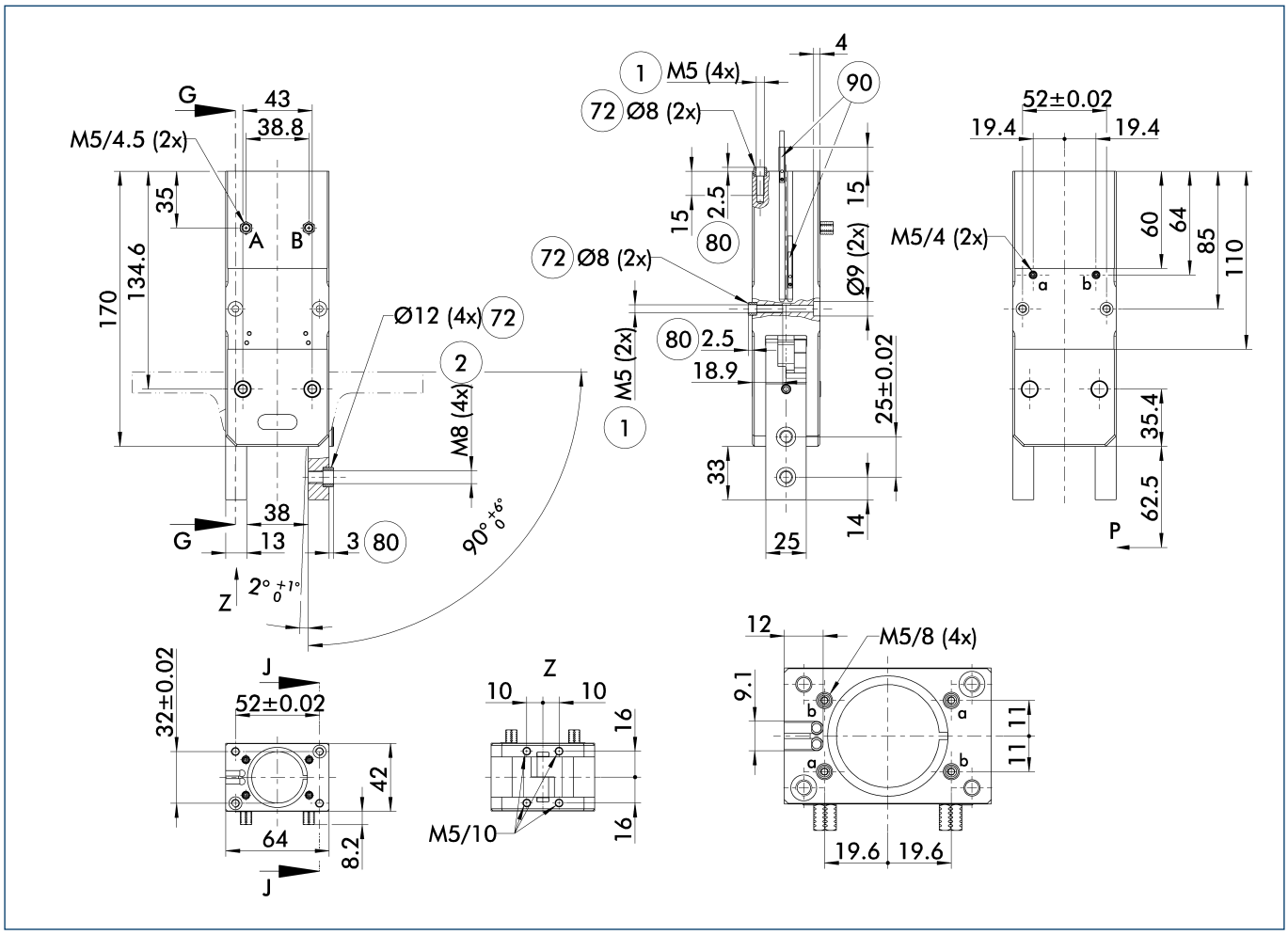

The drawing shows the gripper in the basic version with closed jaws, without dimensional consideration of the options described below.

ⓘ The SDV-P pressure maintenance valve can also be used for I.D. or O.D. gripping alternatively or in addition to the spring-loaded, mechanical gripping force maintenance device (see catalog section on "Accessories").

A, a Main / direct connection, gripper opening

B, b Main / direct connection, gripper closing

(1) Gripper connection

(2) Finger connection

(72) Fit for centering sleeves

(80) Depth of the centering sleeve hole in the mating part

(90) MMS 22... sensor

Closing torque curve**

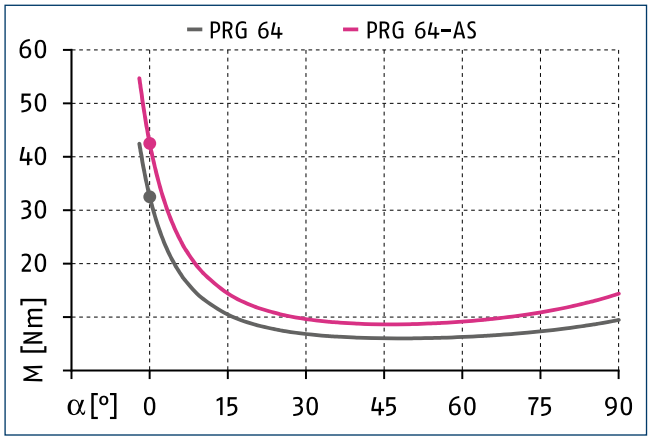

**The diagramm is valid for all opening angle variants.

Maximum permitted finger projection

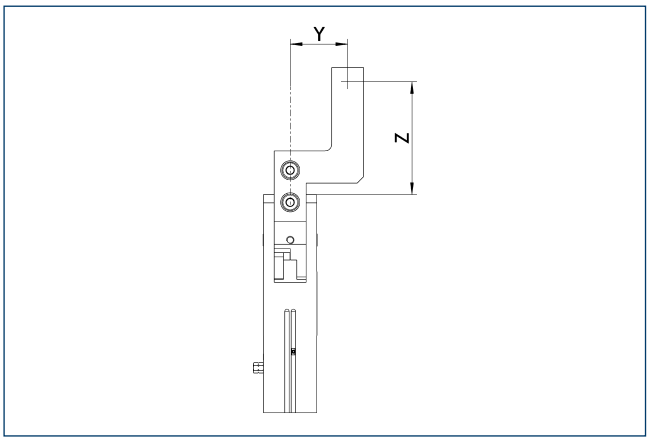

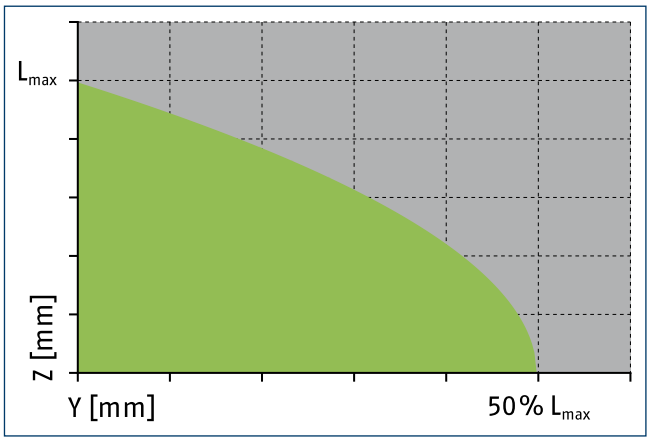

Permitted range Inadmissible range

L_{max} is equivalent to the maximum permitted finger length, see the chart of technical specifications.

Hose-free direct connection M5

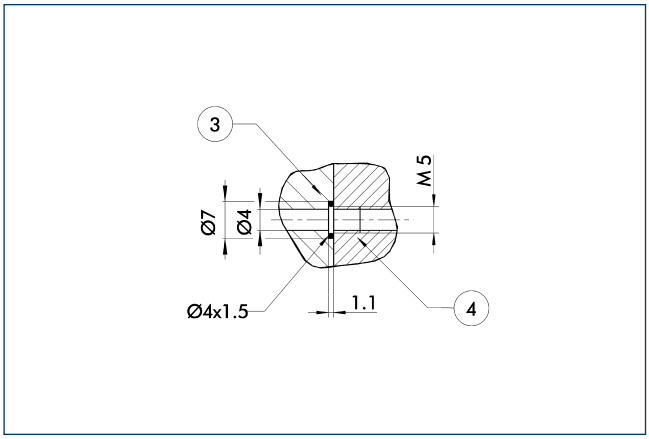

(3) Adapter (4) Gripper

The direct connection is used for supplying compressed air without hoses. Instead, the pressure medium is fed through bore-holes in the mounting plate.

Finger design

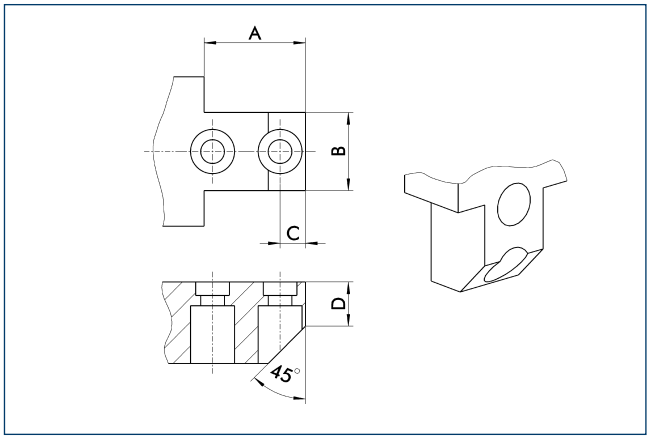

The drawing shows one posibility to design the gripper fingers.

A	B	C	D
[mm]	[mm]	[mm]	[mm]
24	24.5	15	18

SDV-P pressure maintenance valve

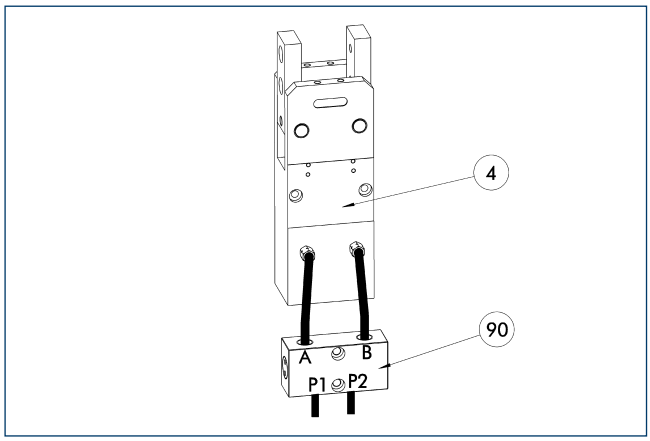

(4) Gripper

(90) SDV-P pressure maintenance valve

The SDV-P pressure maintenance valves ensure that the pressure in the piston chamber of pneumatic gripping, rotary, linear, and quick-change modules is maintained temporarily during an emergency stop.

Description	ID	
Pressure maintenance valve		
SDV-P 04	0403130	

Mounting kit for IN 40 proximity switches

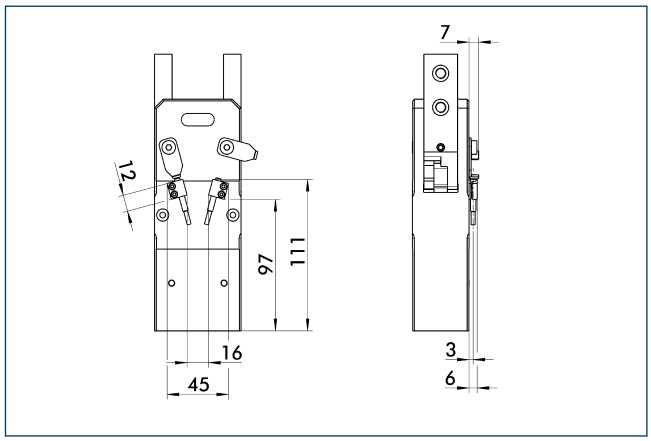

The mounting kit consists of brackets, control cams and appropriate fastening materials. Proximity switches have to be ordered separately.

Description	ID	
Mounting kit for proximity switch		
AS-PRG 64-IN40	0303625	

ⓘ This mounting kit needs to be ordered optionally as an accessory.

IN 40 inductive proximity switches

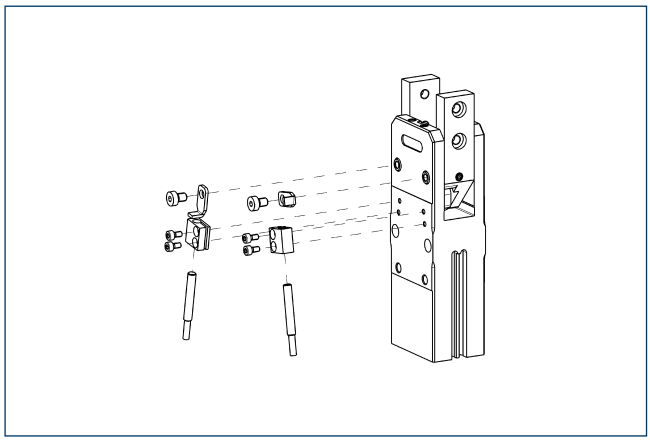

Limit position monitor can be mounted with mounting kit.

Description	ID	Often combined
Mounting kit for proximity switch		
AS-PRG 64-IN40	0303625	
Inductive proximity switches		
IN 40-S-M12	0301574	
IN 40-S-M8	0301474	●
INK 40-S	0301555	
Cable extensions		
KV BG12-SG12 3P-0030-PNP	0301999	
KV BG12-SG12 3P-0060-PNP	0301998	
KV BW08-SG08 3P-0030-PNP	0301495	
KV BW08-SG08 3P-0100-PNP	0301496	
KV BW08-SG08 3P-0200-PNP	0301497	●
KV BW12-SG12 3P-0030-PNP	0301595	
KV BW12-SG12 3P-0100-PNP	0301596	
KV BW12-SG12 3P-0200-PNP	0301597	
Clip for plug / socket		
CLI-M12	0301464	
CLI-M8	0301463	
Connection cables		
KA BG08-L 3P-0300-PNP	0301622	●
KA BG08-L 3P-0500-PNP	0301623	
KA BG12-L 3P-0500-PNP	30016369	
KA BW08-L 3P-0300-PNP	0301594	
KA BW08-L 3P-0500-PNP	0301502	
KA BW12-L 3P-0300-PNP	0301503	
KA BW12-L 3P-0500-PNP	0301507	
Sensor distributor		
V2-M8	0301775	●
V2-M12	0301776	●
V4-M12	0301747	
V4-M8	0301746	
V8-M12	0301752	
V8-M8	0301751	

ⓘ Two sensors (closer/S) are required for each unit, plus extension cables as an option. This mounting kit needs to be ordered optionally as an accessory. Please note the minimum permitted bending radii for the sensor cables, which are generally 35 mm.

Mounting kit for IN 80 proximity switches

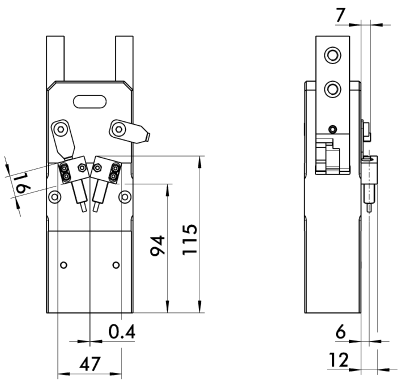

The mounting kit consists of brackets, control cams and appropriate fastening materials. Proximity switches have to be ordered separately.

Description	ID	
Mounting kit for proximity switch		
AS-PRG 64-IN80	0304136	

ⓘ This mounting kit needs to be ordered optionally as an accessory.

IN 80 inductive proximity switches

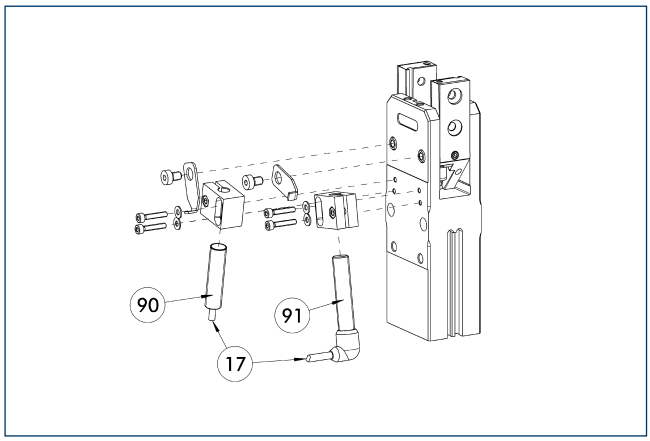

(17) Cable outlet
(91) IN ...-SA sensor
(90) IN ... sensor

Limit position monitor can be mounted with mounting kit.

Description	ID	Often combined
Mounting kit for proximity switch		
AS-PRG 64-IN80	0304136	
Inductive proximity switches		
IN 80-S-M12	0301578	
IN 80-S-M8	0301478	●
INK 80-S	0301550	
Cable extensions		
KV BG12-SG12 3P-0030-PNP	0301999	
KV BG12-SG12 3P-0060-PNP	0301998	
KV BW08-SG08 3P-0030-PNP	0301495	
KV BW08-SG08 3P-0100-PNP	0301496	
KV BW08-SG08 3P-0200-PNP	0301497	●
KV BW12-SG12 3P-0030-PNP	0301595	
KV BW12-SG12 3P-0100-PNP	0301596	
KV BW12-SG12 3P-0200-PNP	0301597	
Clip for plug / socket		
CLI-M12	0301464	
CLI-M8	0301463	
Connection cables		
KA BG08-L 3P-0300-PNP	0301622	●
KA BG08-L 3P-0500-PNP	0301623	
KA BG12-L 3P-0500-PNP	30016369	
KA BW08-L 3P-0300-PNP	0301594	
KA BW08-L 3P-0500-PNP	0301502	
KA BW12-L 3P-0300-PNP	0301503	
KA BW12-L 3P-0500-PNP	0301507	
Sensor distributor		
V2-M8	0301775	●
V2-M12	0301776	●
V4-M12	0301747	
V4-M8	0301746	
V8-M12	0301752	
V8-M8	0301751	

ⓘ Two sensors (closer/S) are required for each unit, plus extension cables as an option. This mounting kit needs to be ordered optionally as an accessory. Please note the minimum permitted bending radii for the sensor cables, which are generally 35 mm.

MMS electronic magnetic switches

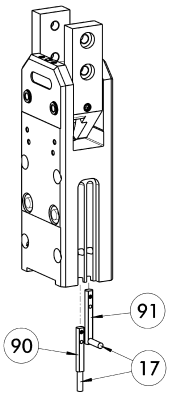

(17) Cable outlet
(91) MMS 22...-SA sensor
(90) MMS 22... sensor

End position monitoring for mounting in the C-slot.

Description	ID	Often combined
MMS electronic magnetic switches		
MMS 22-S-M8-PNP	0301032	●
MMSK 22-S-PNP	0301034	
MMS electronic magnetic switches with lateral cable outlet		
MMS 22-S-M8-PNP-SA	0301042	●
MMSK 22-S-PNP-SA	0301044	
Reed switches		
RMS 22-S-M8	0377720	●
Cable extensions		
KV BW08-SG08 3P-0030-PNP	0301495	
KV BW08-SG08 3P-0100-PNP	0301496	
KV BW08-SG08 3P-0200-PNP	0301497	●
Clip for plug / socket		
CLI-M8	0301463	
Connection cables		
KA BG08-L 3P-0300-PNP	0301622	●
KA BG08-L 3P-0500-PNP	0301623	
KA BW08-L 3P-0300-PNP	0301594	
KA BW08-L 3P-0500-PNP	0301502	
RSS radio sensor system		
RSS-T2	0377710	
Sensor distributor		
V2-M8	0301775	●
V4-M8	0301746	
V8-M8	0301751	

ⓘ Two sensors (closer/S) are required for each unit, plus extension cables as an option. Please note the minimum permitted bending radii for the sensor cables, which are generally 35 mm.

MMS PI1 programmable magnetic switches

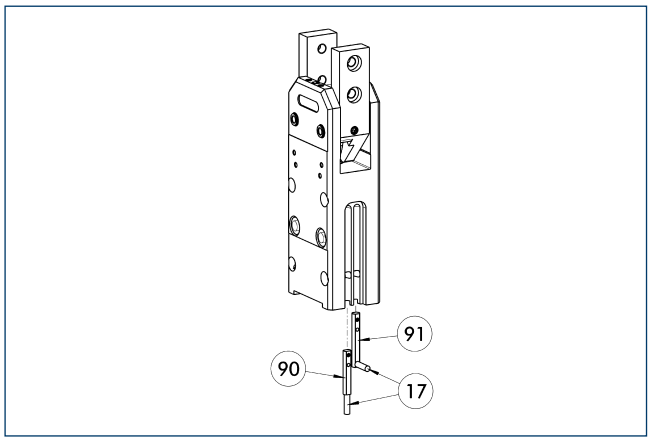

(17) Cable outlet
(91) MMS 22...-PI1-...-SA sensor
(90) MMS 22...-PI1-... sensor

Position query with one programmable position per sensor and electronics integrated in sensor. Programmable via MT magnet teaching tool (included in the scope of delivery) or ST plug teaching tool (optional). Limit position query mounted in C-groove. If the ST plug teaching tools are listed in the table, teaching can only take place with the ST plug teaching tools.

Description	ID	Often combined
Plug teaching tool		
ST-MMS 22-PI1-PNP	0301025	
MMS PI1 programmable magnetic switches		
MMS 22-PI1-S-M8-PNP	0301160	●
MMSK 22-PI1-S-PNP	0301162	
MMS PI1-HD programmable magnetic switches with stainless steel housing		
MMS 22-PI1-S-M8-PNP-HD	0301110	●
MMSK 22-PI1-S-PNP-HD	0301112	
MMS PI1 programmable magnetic switches with lateral cable outlet		
MMS 22-PI1-S-M8-PNP-SA	0301166	●
MMSK 22-PI1-S-PNP-SA	0301168	

ⓘ Two sensors (closer/S) are required for each unit, plus extension cables as an option. Please note the minimum permitted bending radii for the sensor cables, which are generally 35 mm. Connection cable, cable extensions, and sensor distributors can be found in the table for the MMS 22.

MMS PI2 programmable magnetic switches

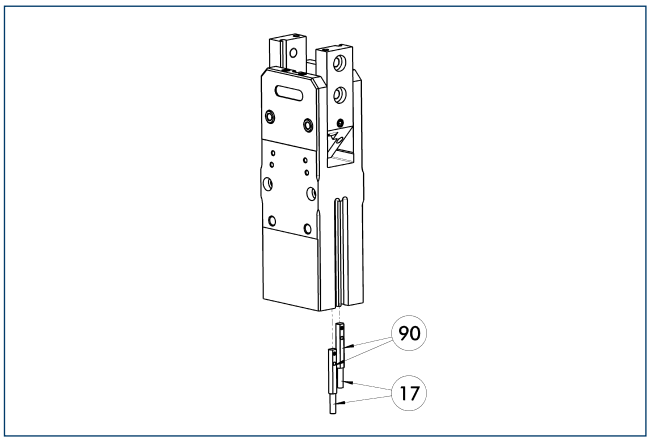

(17) Cable outlet
(90) MMS 22...-PI2-... sensor

Position query with two programmable positions per sensor and electronics integrated in sensor. Programmable via MT magnet teaching tool (included in the scope of delivery) or ST plug teaching tool (optional). Limit position query mounted in C-groove. If the ST plug teaching tools are listed in the table, teaching can only take place with the ST plug teaching tools.

Description	ID	Often combined
Plug teaching tool		
ST-MMS 22-PI2-PNP	0301026	
MMS PI2 programmable magnetic switches		
MMS 22-PI2-S-M8-PNP	0301180	●
MMSK 22-PI2-S-PNP	0301182	
MMS PI2-HD programmable magnetic switches with stainless steel housing		
MMS 22-PI2-S-M8-PNP-HD	0301130	●
MMSK 22-PI2-S-PNP-HD	0301132	

ⓘ Per unit one sensor (closer/S) is required, optionally a cable extension. Please note the minimum permitted bending radii for the sensor cables, which are generally 35 mm. Connection cable, cable extensions, and sensor distributors can be found in the table for the MMS-P 22.

MMS-P programmable magnetic switches

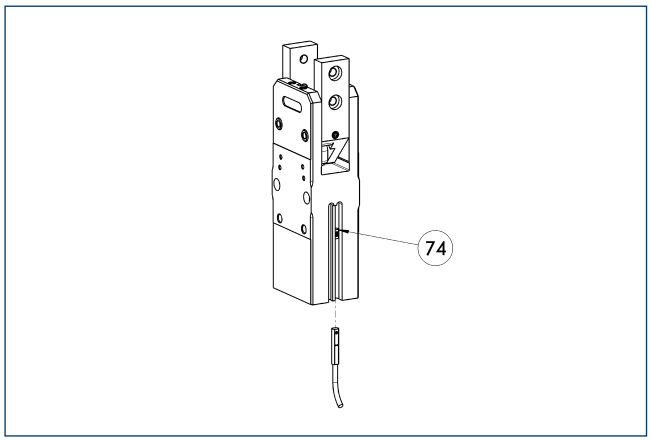

74 Stop for MMS-P

Position monitoring with two programmable positions per sensor. The end position monitoring is mounted in the C-slot.

Description	ID	Often combined
MMS-P programmable magnetic switches		
MMSK-P 22-S-PNP	0301371	
MMS-P 22-S-M8-PNP	0301370	●
Clip for plug / socket		
CLI-M8	0301463	
Connection cables		
KA BG08-L 4P-0500	0307767	●
KA BG08-L 4P-1000	0307768	
KA BW08-L 4P-0500	0307765	
KA BW08-L 4P-1000	0307766	
Sensor distributor		
V2-M8-4P-2XM8-3P	0301380	

ⓘ Per unit one sensor (closer/S) is required, optionally a cable extension. Please note the minimum permitted bending radii for the sensor cables, which are generally 35 mm.

PRG 80

SCHUNK Grippers pneumatic | 2-Finger Radial Grippers | Universal Gripper

Gripping force, O.D. gripping

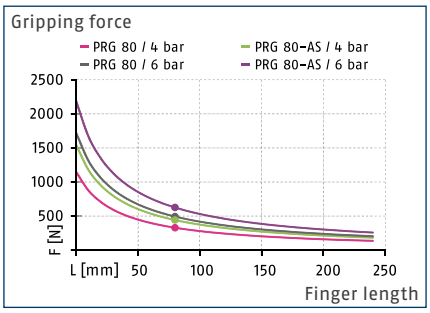

Max. admissible inertia J*

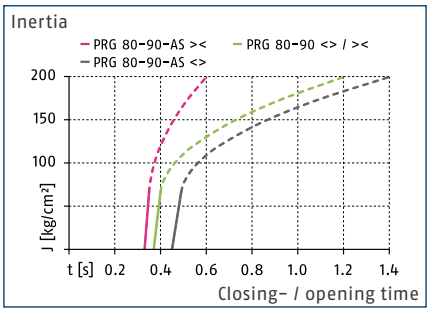

Finger load

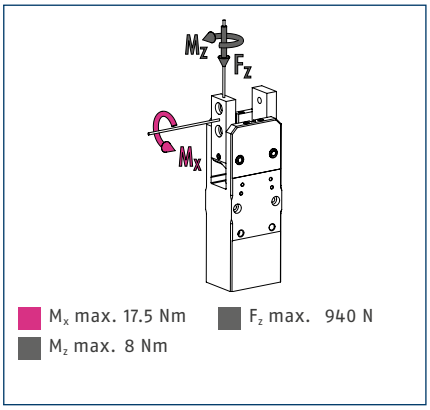

ⓘ The indicated moments and forces are statical values, apply for each base jaw and should not appear simultaneously. If the max. permitted finger weight is exceeded, it is impreative to throttle the air supply so that the jaw movement occurs without any hitting or bouncing. Service life may be reduced.

Technical data

Description		PRG 80-30	PRG 80-30-AS	PRG 80-60	PRG 80-60-AS	PRG 80-90	PRG 80-90-AS
ID		0303656	0303666	0303696	0303706	0303676	0303686
Opening angle per jaw	[°]	30	30	60	60	90	90
Closed angle per jaw up to	[°]	3	3	3	3	3	3
Closing moment		55	70	55	70	55	70
Spring-actuated closing moment	[Nm]		15		15		15
Weight	[kg]	2.17	2.26	2.16	2.25	2.15	2.24
Recommended workpiece weight	[kg]	2.5	2.5	2.5	2.5	2.5	2.5
Fluid consumption per double stroke	[cm³]	128	128	143	143	160	160
min. / max. operating pressure	[bar]	2/8	4/6.5	2/8	4/6.5	2/8	4/6.5
Nominal operating pressure	[bar]	6	6	6	6	6	6
Closing- / opening time	[s]	0.17/0.17	0.17/0.25	0.27/0.27	0.24/0.34	0.37/0.37	0.33/0.45
Closing- / opening time only with spring	[s]		0.18		0.35		0.52
max. permitted finger length	[mm]	160	160	160	160	160	160
max. mass moment of inertia per jaw*	[kgcm²]	66.44	66.44	66.44	66.44	66.44	66.44
IP class		20	20	20	20	20	20
min. / max. ambient temperature	[°C]	5/90	5/90	5/90	5/90	5/90	5/90
Repeat accuracy	[mm]	0.1	0.1	0.1	0.1	0.1	0.1
Options and their characteristics							
High-temperature version		39303656	39303666	39303696	39303706	39303676	39303686
min. / max. ambient temperature	[°C]	5/130	5/130	5/130	5/130	5/130	5/130

*The unit can be actuated without an external customized throttling at the given value of max. mass moment of inertia per jaw. In case of higher mass moments of inertia, an additional throttling is possible.
The curve applies for 90° versions. For other versions the curve must be parallely off-set according to the opening and closing times.
The specified closing moment is obtained at an opening angle of 0°. Closing moments for further angles can be read from the following diagram, closing moment to opening angle.

Main view

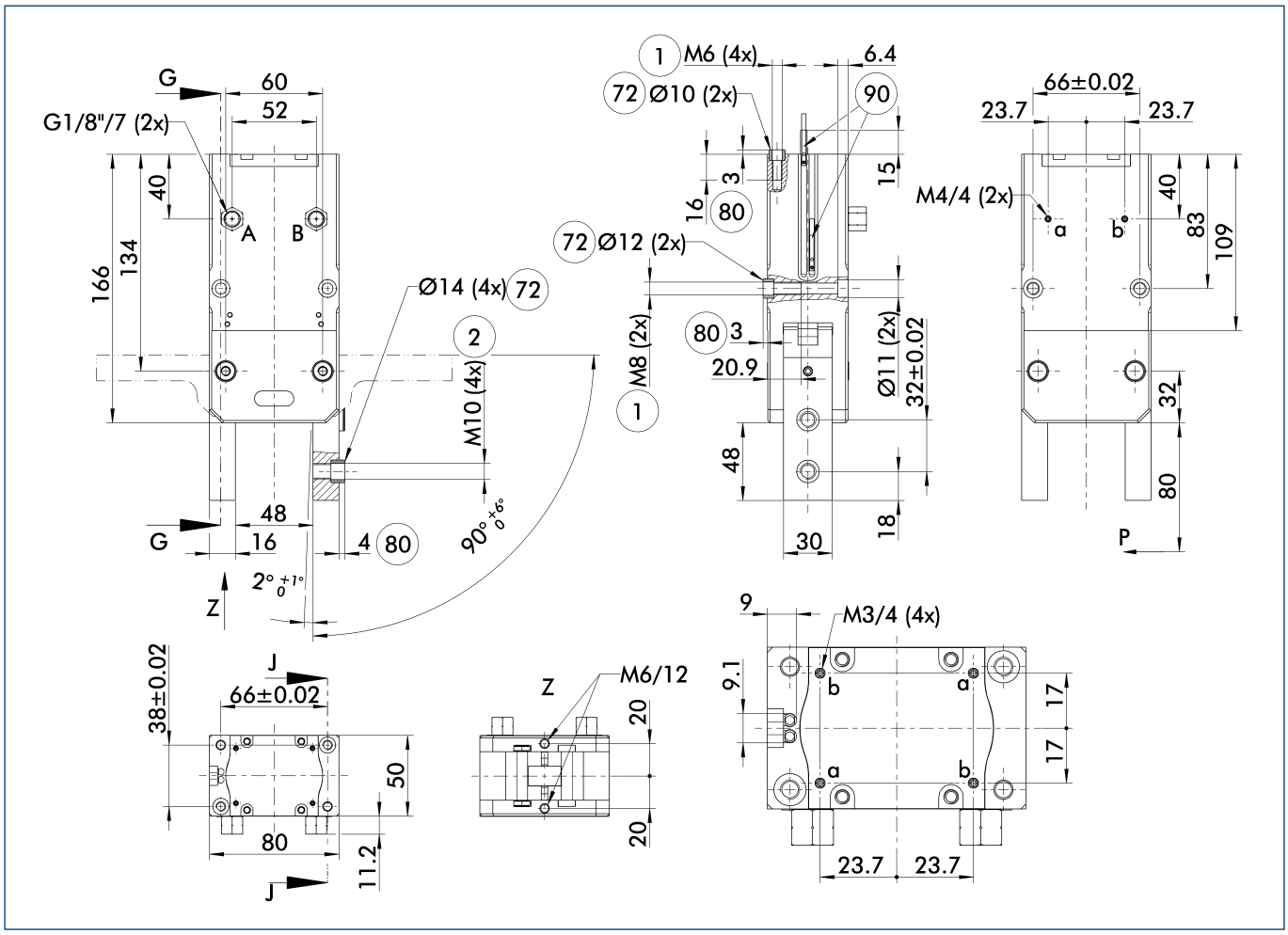

The drawing shows the gripper in the basic version with closed jaws, without dimensional consideration of the options described below.

ⓘ The SDV-P pressure maintenance valve can also be used for I.D. or O.D. gripping alternatively or in addition to the spring-loaded, mechanical gripping force maintenance device (see catalog section on "Accessories").

A, a Main / direct connection, gripper opening

B, b Main / direct connection, gripper closing

(1) Gripper connection

(2) Finger connection

(72) Fit for centering sleeves

(80) Depth of the centering sleeve hole in the mating part

(90) MMS 22... sensor

Closing torque curve**

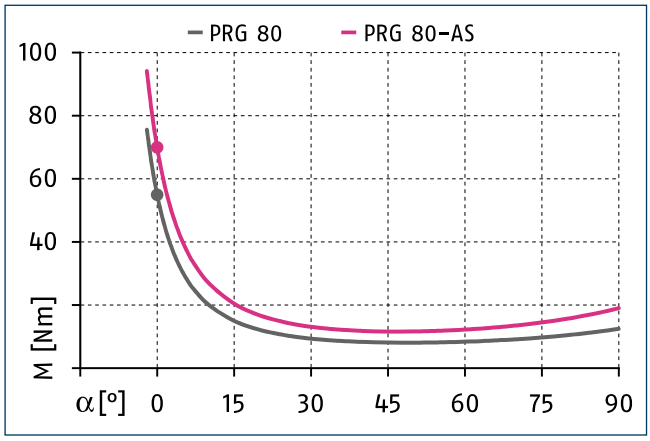

**The diagramm is valid for all opening angle variants.

Maximum permitted finger projection

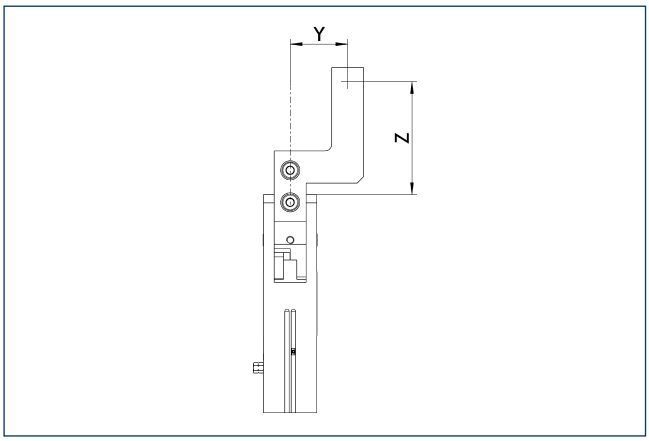

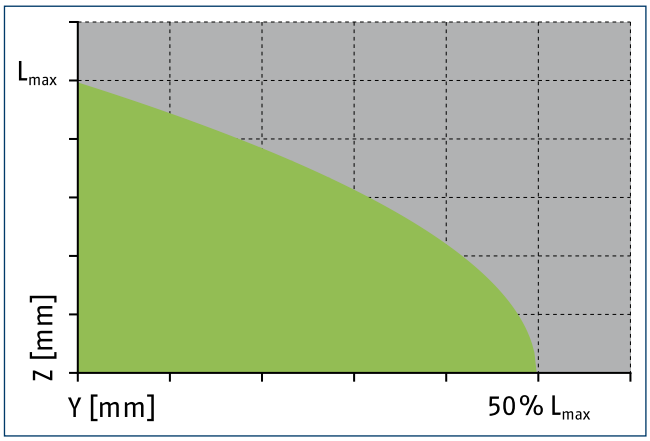

Permitted range Inadmissible range

L_{max} is equivalent to the maximum permitted finger length, see the chart of technical specifications.

Hose-free direct connection M4

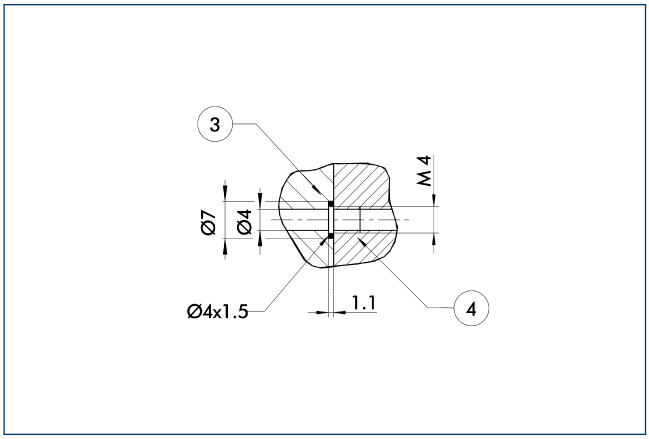

(3) Adapter (4) Gripper

The direct connection is used for supplying compressed air without hoses. Instead, the pressure medium is fed through bore-holes in the mounting plate.

Finger design

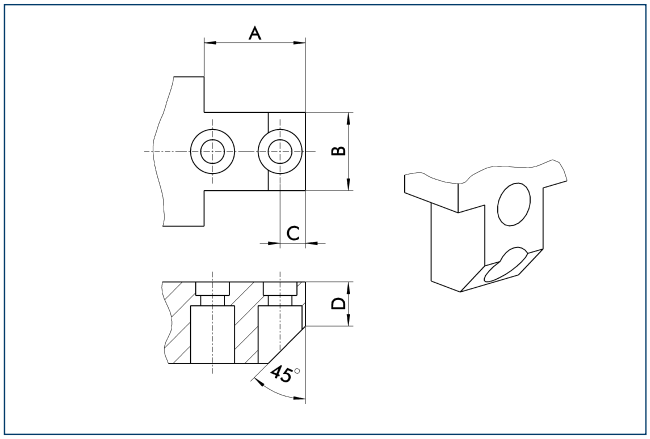

The drawing shows one posibility to design the gripper fingers.

A	B	C	D
[mm]	[mm]	[mm]	[mm]
16	29.5	12	18.5

SDV-P pressure maintenance valve

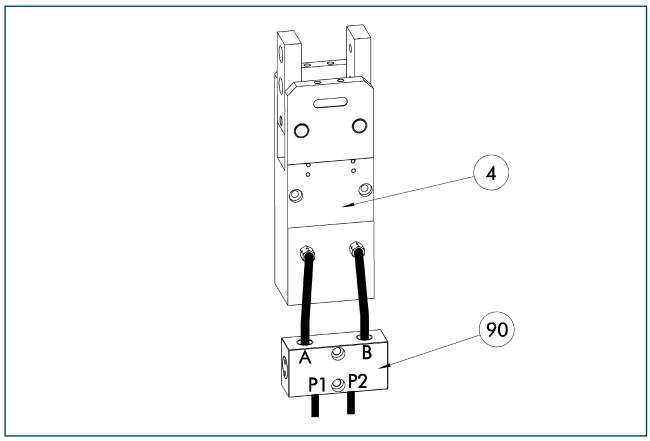

(4) Gripper

(90) SDV-P pressure maintenance valve

The SDV-P pressure maintenance valves ensure that the pressure in the piston chamber of pneumatic gripping, rotary, linear, and quick-change modules is maintained temporarily during an emergency stop.

Description	ID	
Pressure maintenance valve		
SDV-P 04	0403130	

Mounting kit for IN 80 proximity switches

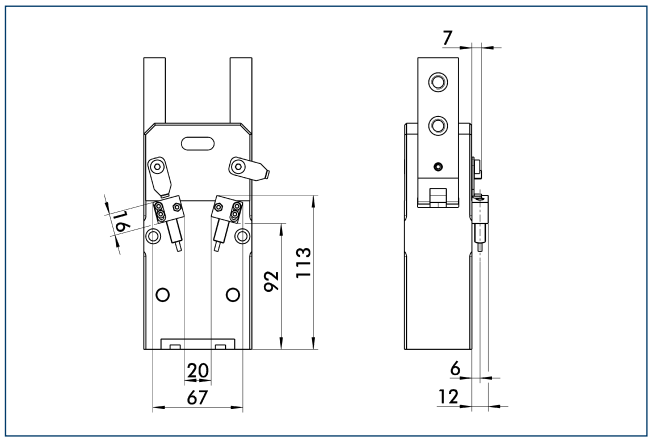

The mounting kit consists of brackets, control cams and appropriate fastening materials. Proximity switches have to be ordered separately.

Description	ID	
Mounting kit for proximity switch		
AS-PRG 80-IN80	0303626	

ⓘ This mounting kit needs to be ordered optionally as an accessory.

IN 80 inductive proximity switches

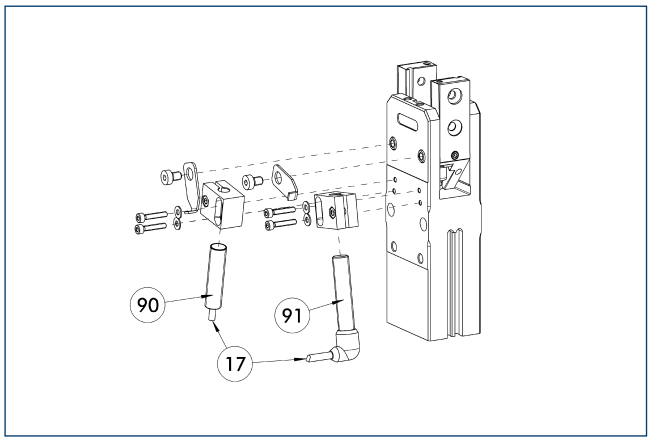

(17) Cable outlet
(91) IN ...-SA sensor
(90) IN ... sensor

Limit position monitor can be mounted with mounting kit.

Description	ID	Often combined
Mounting kit for proximity switch		
AS-PRG 80-IN80	0303626	
Inductive proximity switches		
IN 80-S-M12	0301578	
IN 80-S-M8	0301478	●
INK 80-S	0301550	
Inductive proximity switches with lateral outlet		
IN 80-S-M12-SA	0301587	
IN 80-S-M8-SA	0301483	●
INK 80-S-SA	0301566	
Cable extensions		
KV BG12-SG12 3P-0030-PNP	0301999	
KV BG12-SG12 3P-0060-PNP	0301998	
KV BW08-SG08 3P-0030-PNP	0301495	
KV BW08-SG08 3P-0100-PNP	0301496	
KV BW08-SG08 3P-0200-PNP	0301497	●
KV BW12-SG12 3P-0030-PNP	0301595	
KV BW12-SG12 3P-0100-PNP	0301596	
KV BW12-SG12 3P-0200-PNP	0301597	
Clip for plug / socket		
CLI-M12	0301464	
CLI-M8	0301463	
Connection cables		
KA BG08-L 3P-0300-PNP	0301622	●
KA BG08-L 3P-0500-PNP	0301623	
KA BG12-L 3P-0500-PNP	30016369	
KA BW08-L 3P-0300-PNP	0301594	
KA BW08-L 3P-0500-PNP	0301502	
KA BW12-L 3P-0300-PNP	0301503	
KA BW12-L 3P-0500-PNP	0301507	
Sensor distributor		
V2-M8	0301775	●
V2-M12	0301776	●

ⓘ Two sensors (closer/S) are required for each unit, plus extension cables as an option. This mounting kit needs to be ordered optionally as an accessory. Please note the minimum permitted bending radii for the sensor cables, which are generally 35 mm.

MMS electronic magnetic switches

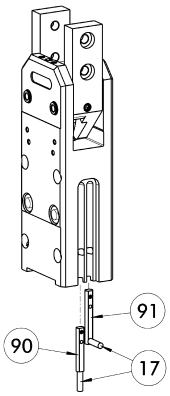

(17) Cable outlet
(91) MMS 22...-SA sensor
(90) MMS 22... sensor

End position monitoring for mounting in the C-slot.

Description	ID	Often combined
MMS electronic magnetic switches		
MMS 22-S-M8-PNP	0301032	●
MMSK 22-S-PNP	0301034	
MMS electronic magnetic switches with lateral cable outlet		
MMS 22-S-M8-PNP-SA	0301042	●
MMSK 22-S-PNP-SA	0301044	
Cable extensions		
KV BW08-SG08 3P-0030-PNP	0301495	
KV BW08-SG08 3P-0100-PNP	0301496	
KV BW08-SG08 3P-0200-PNP	0301497	●
Clip for plug / socket		
CLI-M8	0301463	
Connection cables		
KA BG08-L 3P-0300-PNP	0301622	●
KA BG08-L 3P-0500-PNP	0301623	
KA BW08-L 3P-0300-PNP	0301594	
KA BW08-L 3P-0500-PNP	0301502	
Sensor distributor		
V2-M8	0301775	●
V4-M8	0301746	
V8-M8	0301751	

ⓘ Two sensors (closer/S) are required for each unit, plus extension cables as an option. Please note the minimum permitted bending radii for the sensor cables, which are generally 35 mm.

MMS PI1 programmable magnetic switches

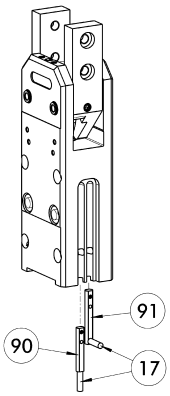

(17) Cable outlet
(91) MMS 22...-PI1-...-SA sensor
(90) MMS 22...-PI1-... sensor

Position query with one programmable position per sensor and electronics integrated in sensor. Programmable via MT magnet teaching tool (included in the scope of delivery) or ST plug teaching tool (optional). Limit position query mounted in C-groove. If the ST plug teaching tools are listed in the table, teaching can only take place with the ST plug teaching tools.

Description	ID	Often combined
MMS PI1 programmable magnetic switches		
MMS 22-PI1-S-M8-PNP	0301160	●
MMSK 22-PI1-S-PNP	0301162	
MMS PI1-HD programmable magnetic switches with stainless steel housing		
MMS 22-PI1-S-M8-PNP-HD	0301110	●
MMSK 22-PI1-S-PNP-HD	0301112	
MMS PI1 programmable magnetic switches with lateral cable outlet		
MMS 22-PI1-S-M8-PNP-SA	0301166	●
MMSK 22-PI1-S-PNP-SA	0301168	

ⓘ Two sensors (closer/S) are required for each unit, plus extension cables as an option. Please note the minimum permitted bending radii for the sensor cables, which are generally 35 mm. Connection cable, cable extensions, and sensor distributors can be found in the table for the MMS 22.

PRG 100

SCHUNK Grippers pneumatic | 2-Finger Radial Grippers | Universal Gripper

Gripping force, O.D. gripping

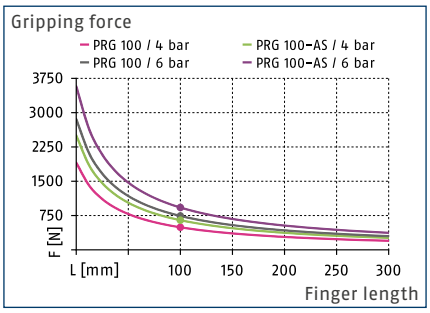

Max. admissible inertia J*

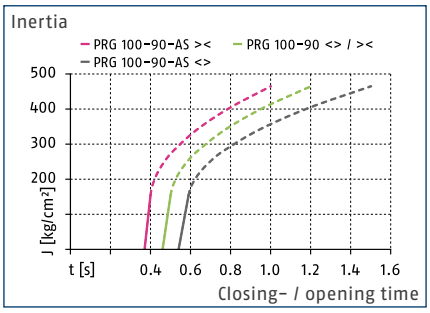

Finger load

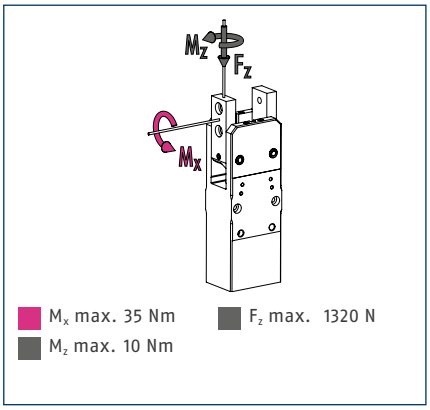

ⓘ The indicated moments and forces are statical values, apply for each base jaw and should not appear simultaneously. If the max. permitted finger weight is exceeded, it is impreative to throttle the air supply so that the jaw movement occurs without any hitting or bouncing. Service life may be reduced.

Technical data

Description		PRG 100-30	PRG 100-30-AS	PRG 100-60	PRG 100-60-AS	PRG 100-90	PRG 100-90-AS
ID		0303657	0303667	0303697	0303707	0303677	0303687
Opening angle per jaw	[°]	30	30	60	60	90	90
Closed angle per jaw up to	[°]	3	3	3	3	3	3
Closing moment		100	125	100	125	100	125
Spring-actuated closing moment	[Nm]		25		25		25
Weight	[kg]	3.67	3.81	3.66	3.8	3.64	3.78
Recommended workpiece weight	[kg]	3.78	3.78	3.78	3.78	3.78	3.78
Fluid consumption per double stroke	[cm³]	230	230	260	260	290	290
min. / max. operating pressure	[bar]	2/8	4/6.5	2/8	4/6.5	2/8	4/6.5
Nominal operating pressure	[bar]	6	6	6	6	6	6
Closing- / opening time	[s]	0.23/0.23	0.21/0.33	0.34/0.34	0.29/0.42	0.46/0.46	0.37/0.54
Closing- / opening time only with spring	[s]		0.20		0.40		0.60
max. permitted finger length	[mm]	200	200	200	200	200	200
max. mass moment of inertia per jaw*	[kgcm²]	155.2	155.2	155.2	155.2	155.2	155.2
IP class		20	20	20	20	20	20
min. / max. ambient temperature	[°C]	5/90	5/90	5/90	5/90	5/90	5/90
Repeat accuracy	[mm]	0.1	0.1	0.1	0.1	0.1	0.1
Options and their characteristics							
High-temperature version		39303657	39303667	39303697	39303707	39303677	39303687
min. / max. ambient temperature	[°C]	5/130	5/130	5/130	5/130	5/130	5/130

*The unit can be actuated without an external customized throttling at the given value of max. mass moment of inertia per jaw. In case of higher mass moments of inertia, an additional throttling is possible.
The curve applies for 90° versions. For other versions the curve must be parallely off-set according to the opening and closing times.
The specified closing moment is obtained at an opening angle of 0°. Closing moments for further angles can be read from the following diagram, closing moment to opening angle.

Main view

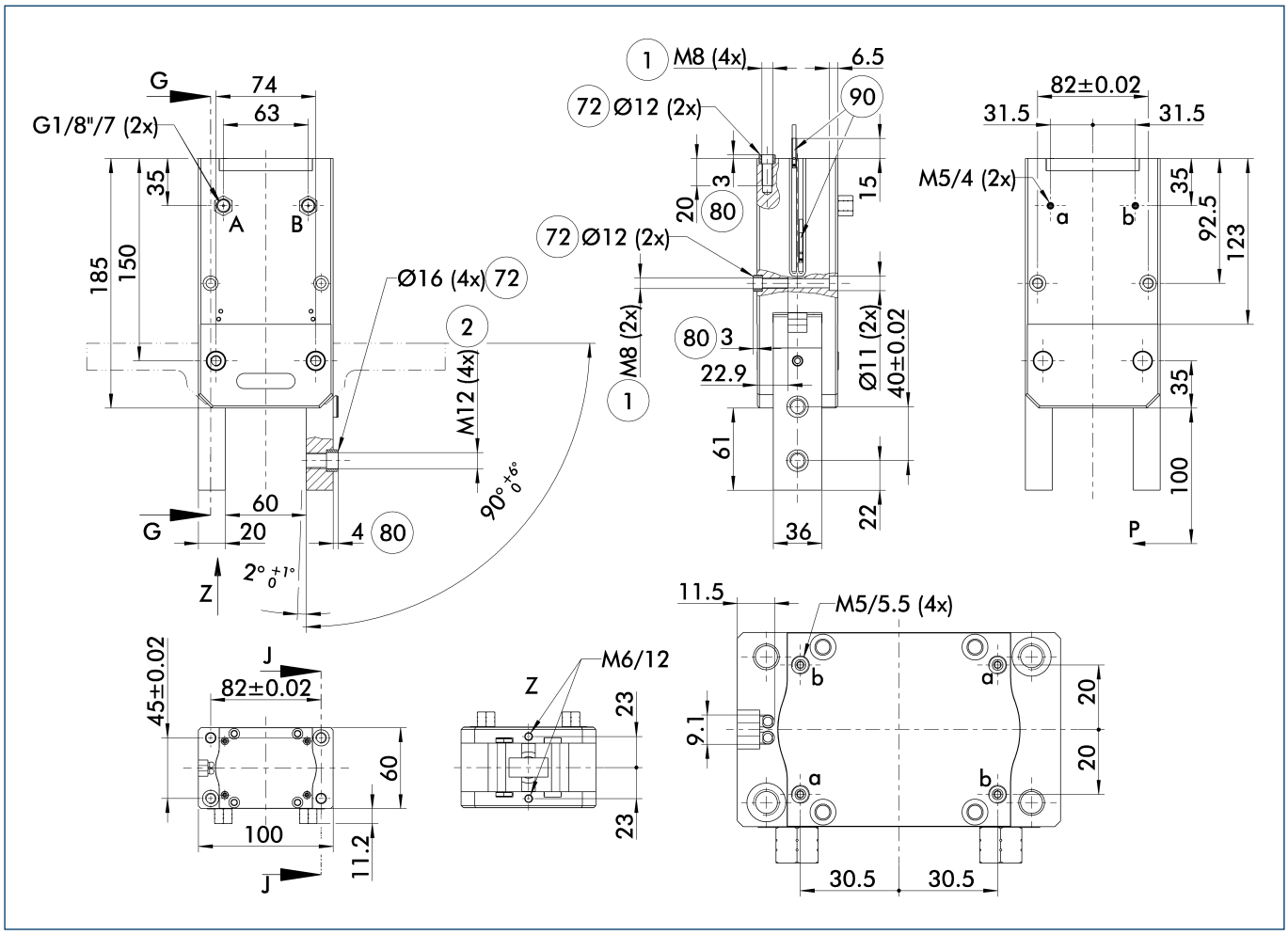

The drawing shows the gripper in the basic version with closed jaws, without dimensional consideration of the options described below.

ⓘ The SDV-P pressure maintenance valve can also be used for I.D. or O.D. gripping alternatively or in addition to the spring-loaded, mechanical gripping force maintenance device (see catalog section on "Accessories").

A, a Main / direct connection, gripper opening

B, b Main / direct connection, gripper closing

(1) Gripper connection

(2) Finger connection

(72) Fit for centering sleeves

(80) Depth of the centering sleeve hole in the mating part

(90) MMS 22... sensor

Closing torque curve**

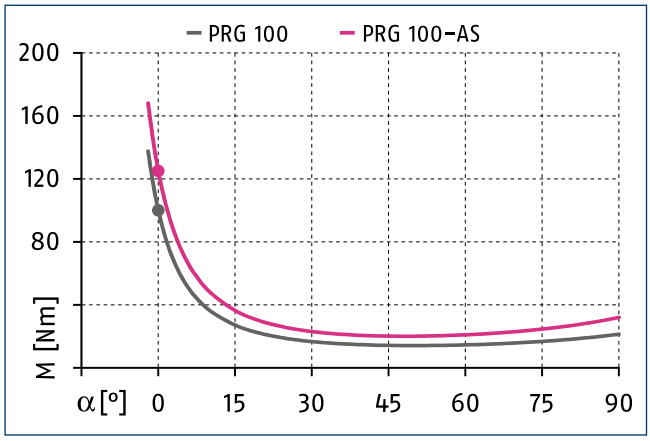

**The diagramm is valid for all opening angle variants.

Maximum permitted finger projection

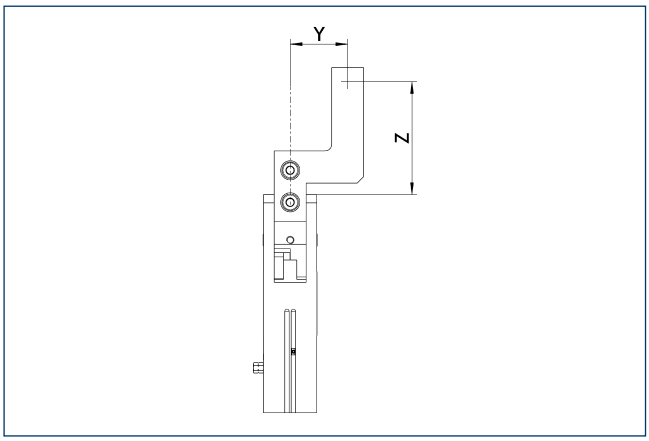

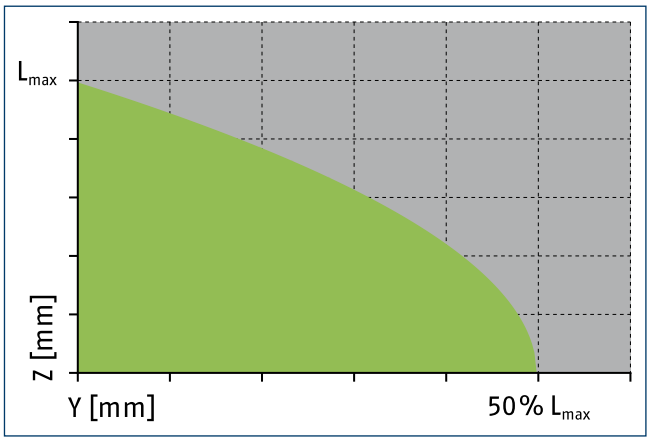

Permitted range Inadmissible range

L_{max} is equivalent to the maximum permitted finger length, see the chart of technical specifications.

Hose-free direct connection M5

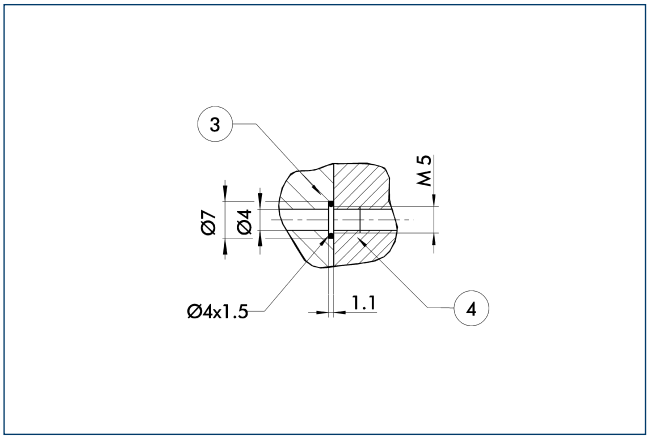

(3) Adapter (4) Gripper

The direct connection is used for supplying compressed air without hoses. Instead, the pressure medium is fed through bore-holes in the mounting plate.

Finger design

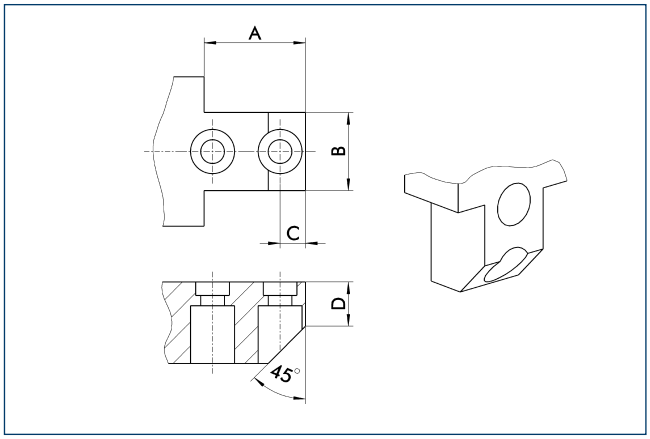

The drawing shows one posibility to design the gripper fingers.

A	B	C	D
[mm]	[mm]	[mm]	[mm]
20	35.5	15	22

SDV-P pressure maintenance valve

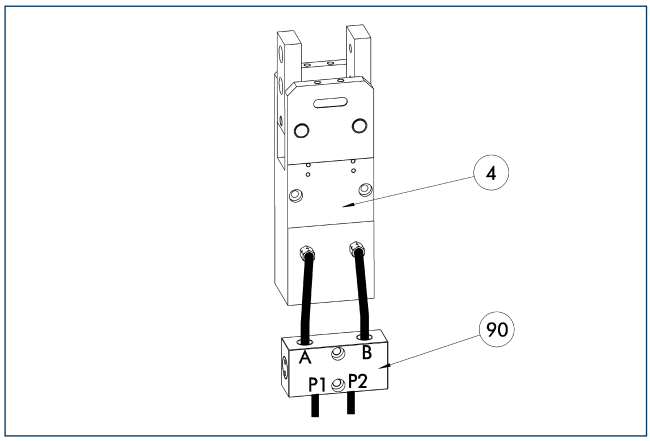

(4) Gripper

(90) SDV-P pressure maintenance valve

The SDV-P pressure maintenance valves ensure that the pressure in the piston chamber of pneumatic gripping, rotary, linear, and quick-change modules is maintained temporarily during an emergency stop.

Description	ID	
Pressure maintenance valve		
SDV-P 04	0403130	

Mounting kit for IN 80 proximity switches

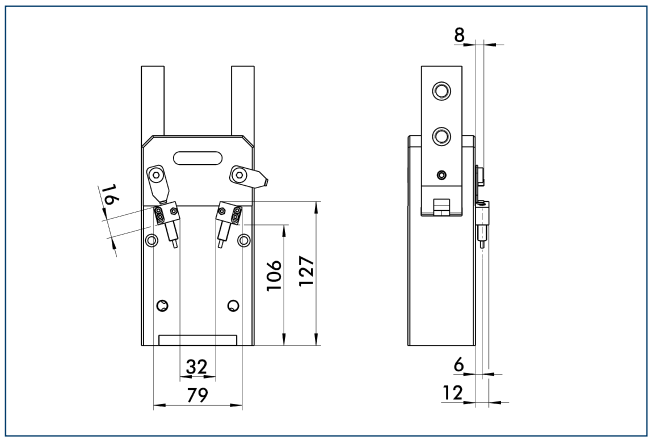

The mounting kit consists of brackets, control cams and appropriate fastening materials. Proximity switches have to be ordered separately.

Description	ID	
Mounting kit for proximity switch		
AS-PRG 100-IN80	0303627	

ⓘ This mounting kit needs to be ordered optionally as an accessory.

IN 80 inductive proximity switches

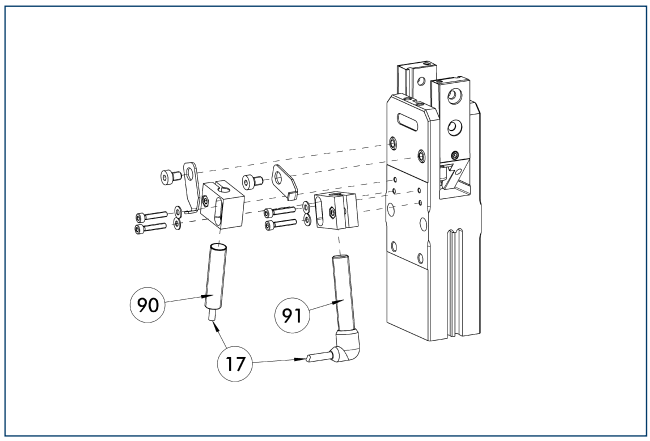

17 Cable outlet
91 IN ...-SA sensor
90 IN ... sensor

Limit position monitor can be mounted with mounting kit.

Description	ID	Often combined
Mounting kit for proximity switch		
AS-PRG 100-IN80	0303627	
Inductive proximity switches		
IN 80-S-M12	0301578	
IN 80-S-M8	0301478	●
INK 80-S	0301550	
Inductive proximity switches with lateral outlet		
IN 80-S-M12-SA	0301587	
IN 80-S-M8-SA	0301483	●
INK 80-S-SA	0301566	
Cable extensions		
KV BG12-SG12 3P-0030-PNP	0301999	
KV BG12-SG12 3P-0060-PNP	0301998	
KV BW08-SG08 3P-0030-PNP	0301495	
KV BW08-SG08 3P-0100-PNP	0301496	
KV BW08-SG08 3P-0200-PNP	0301497	●
KV BW12-SG12 3P-0030-PNP	0301595	
KV BW12-SG12 3P-0100-PNP	0301596	
KV BW12-SG12 3P-0200-PNP	0301597	
Clip for plug / socket		
CLI-M12	0301464	
CLI-M8	0301463	
Connection cables		
KA BG08-L 3P-0300-PNP	0301622	●
KA BG08-L 3P-0500-PNP	0301623	
KA BG12-L 3P-0500-PNP	30016369	
KA BW08-L 3P-0300-PNP	0301594	
KA BW08-L 3P-0500-PNP	0301502	
KA BW12-L 3P-0300-PNP	0301503	
KA BW12-L 3P-0500-PNP	0301507	
Sensor distributor		
V2-M8	0301775	●
V2-M12	0301776	●

ⓘ Two sensors (closer/S) are required for each unit, plus extension cables as an option. This mounting kit needs to be ordered optionally as an accessory. Please note the minimum permitted bending radii for the sensor cables, which are generally 35 mm.

MMS electronic magnetic switches

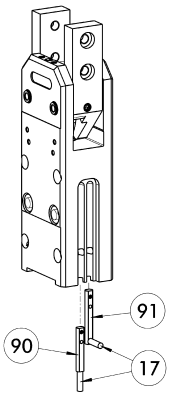

17 Cable outlet
91 MMS 22...-SA sensor
90 MMS 22... sensor

End position monitoring for mounting in the C-slot.

Description	ID	Often combined
MMS electronic magnetic switches		
MMS 22-S-M8-PNP	0301032	●
MMSK 22-S-PNP	0301034	
MMS electronic magnetic switches with lateral cable outlet		
MMS 22-S-M8-PNP-SA	0301042	●
MMSK 22-S-PNP-SA	0301044	
Cable extensions		
KV BW08-SG08 3P-0030-PNP	0301495	
KV BW08-SG08 3P-0100-PNP	0301496	
KV BW08-SG08 3P-0200-PNP	0301497	●
Clip for plug / socket		
CLI-M8	0301463	
Connection cables		
KA BG08-L 3P-0300-PNP	0301622	●
KA BG08-L 3P-0500-PNP	0301623	
KA BW08-L 3P-0300-PNP	0301594	
KA BW08-L 3P-0500-PNP	0301502	
Sensor distributor		
V2-M8	0301775	●
V4-M8	0301746	
V8-M8	0301751	

ⓘ Two sensors (closer/S) are required for each unit, plus extension cables as an option. Please note the minimum permitted bending radii for the sensor cables, which are generally 35 mm.

MMS PI1 programmable magnetic switches

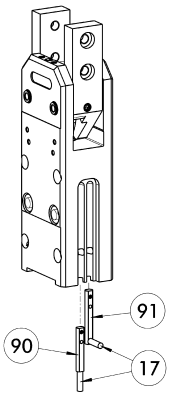

(17) Cable outlet
(91) MMS 22...-PI1-...-SA sensor
(90) MMS 22...-PI1-... sensor

Position query with one programmable position per sensor and electronics integrated in sensor. Programmable via MT magnet teaching tool (included in the scope of delivery) or ST plug teaching tool (optional). Limit position query mounted in C-groove. If the ST plug teaching tools are listed in the table, teaching can only take place with the ST plug teaching tools.

Description	ID	Often combined
MMS PI1 programmable magnetic switches		
MMS 22-PI1-S-M8-PNP	0301160	●
MMSK 22-PI1-S-PNP	0301162	
MMS PI1-HD programmable magnetic switches with stainless steel housing		
MMS 22-PI1-S-M8-PNP-HD	0301110	●
MMSK 22-PI1-S-PNP-HD	0301112	
MMS PI1 programmable magnetic switches with lateral cable outlet		
MMS 22-PI1-S-M8-PNP-SA	0301166	●
MMSK 22-PI1-S-PNP-SA	0301168	

ⓘ Two sensors (closer/S) are required for each unit, plus extension cables as an option. Please note the minimum permitted bending radii for the sensor cables, which are generally 35 mm. Connection cable, cable extensions, and sensor distributors can be found in the table for the MMS 22.

PRG 125

SCHUNK Grippers pneumatic | 2-Finger Radial Grippers | Universal Gripper

Gripping force, O.D. gripping

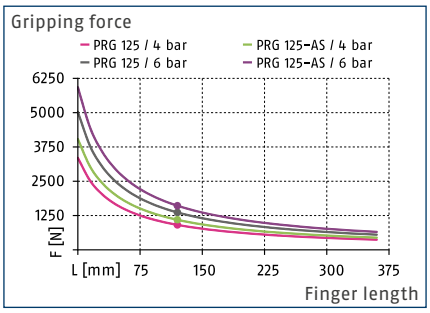

Max. admissible inertia J*

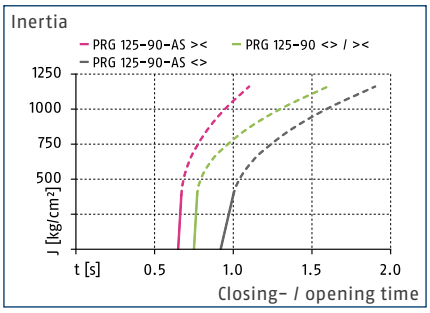

Finger load

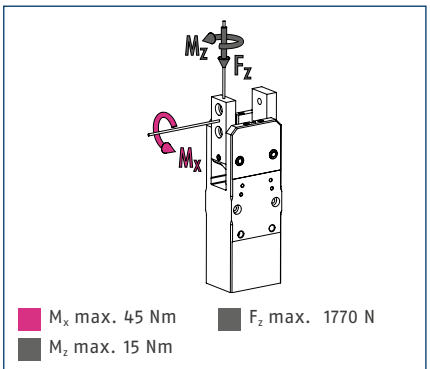

ⓘ The indicated moments and forces are statical values, apply for each base jaw and should not appear simultaneously. If the max. permitted finger weight is exceeded, it is impreative to throttle the air supply so that the jaw movement occurs without any hitting or bouncing. Service life may be reduced.

Technical data

Description		PRG 125-30	PRG 125-30-AS	PRG 125-60	PRG 125-60-AS	PRG 125-90	PRG 125-90-AS
ID		0303658	0303668	0303698	0303708	0303678	0303688
Opening angle per jaw	[°]	30	30	60	60	90	90
Closed angle per jaw up to	[°]	3	3	3	3	3	3
Closing moment	[Nm]	225	295	225	295	225	295
Spring-actuated closing moment	[Nm]		70		70		70
Weight	[kg]	6.49	6.72	6.48	6.71	6.46	6.69
Recommended workpiece weight	[kg]	6.96	6.96	6.96	6.96	6.96	6.96
Fluid consumption per double stroke	[cm³]	475	475	520	520	580	580
min. / max. operating pressure	[bar]	2/8	4/6.5	2/8	4/6.5	2/8	4/6.5
Nominal operating pressure	[bar]	6	6	6	6	6	6
Closing- / opening time	[s]	0.4/0.4	0.39/0.62	0.58/0.58	0.54/0.79	0.75/0.75	0.65/0.92
Closing- / opening time only with spring	[s]		0.35		0.70		1.00
max. permitted finger length	[mm]	240	240	240	240	240	240
max. mass moment of inertia per jaw*	[kgcm²]	386.8	386.8	386.8	386.8	386.8	386.8
IP class		20	20	20	20	20	20
min. / max. ambient temperature	[°C]	5/90	5/90	5/90	5/90	5/90	5/90
Repeat accuracy	[mm]	0.1	0.1	0.1	0.1	0.1	0.1
Options and their characteristics							
High-temperature version		39303658	39303668	39303698	39303708	39303678	39303688
min. / max. ambient temperature	[°C]	5/130	5/130	5/130	5/130	5/130	5/130

*The unit can be actuated without an external customized throttling at the given value of max. mass moment of inertia per jaw. In case of higher mass moments of inertia, an additional throttling is possible.
The curve applies for 90° versions. For other versions the curve must be parallely off-set according to the opening and closing times.
The specified closing moment is obtained at an opening angle of 0°. Closing moments for further angles can be read from the following diagram, closing moment to opening angle.

Main view

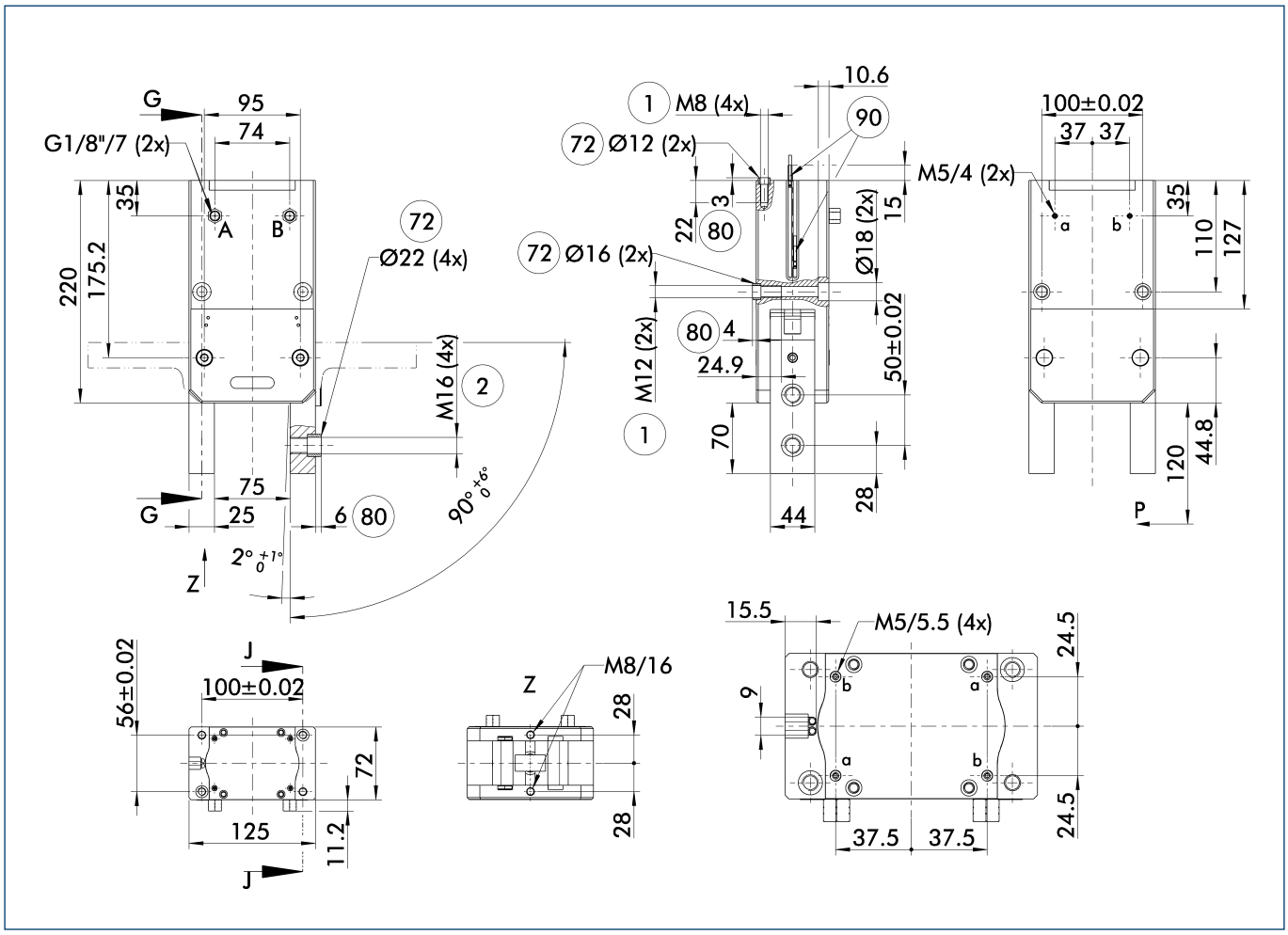

The drawing shows the gripper in the basic version with closed jaws, without dimensional consideration of the options described below.

ⓘ The SDV-P pressure maintenance valve can also be used for I.D. or O.D. gripping alternatively or in addition to the spring-loaded, mechanical gripping force maintenance device (see catalog section on "Accessories").

A, a Main / direct connection, gripper opening

B, b Main / direct connection, gripper closing

(1) Gripper connection

(2) Finger connection

(72) Fit for centering sleeves

(80) Depth of the centering sleeve hole in the mating part

(90) MMS 22... sensor

Closing torque curve**

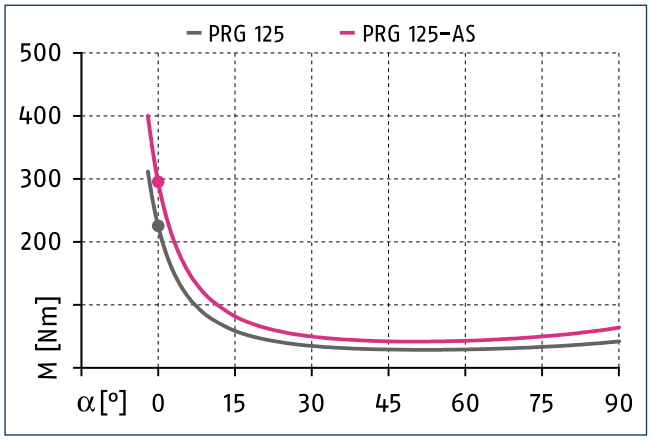

**The diagramm is valid for all opening angle variants.

Maximum permitted finger projection

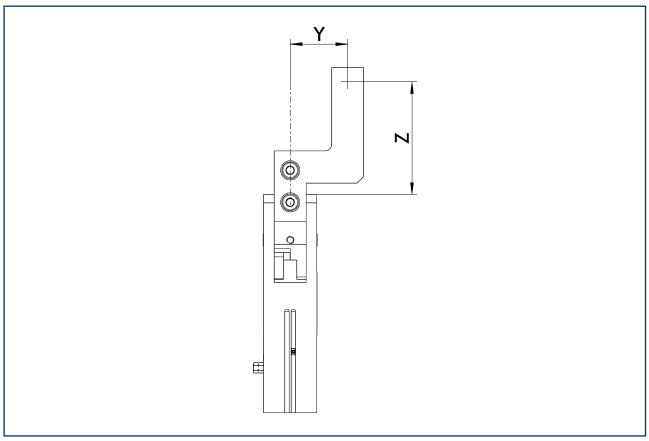

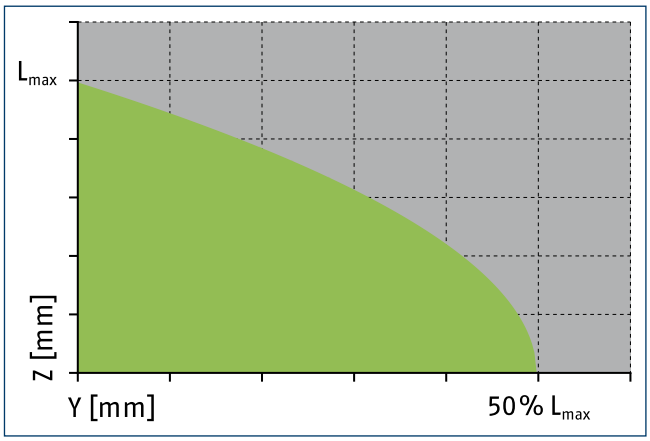

Permitted range Inadmissible range

L_{max} is equivalent to the maximum permitted finger length, see the chart of technical specifications.

Hose-free direct connection M5

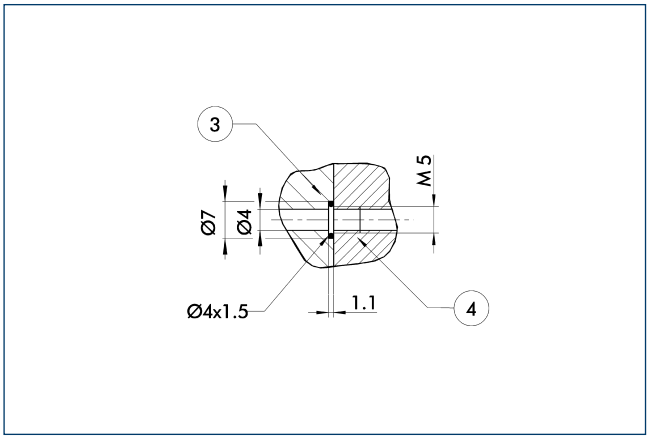

(3) Adapter (4) Gripper

The direct connection is used for supplying compressed air without hoses. Instead, the pressure medium is fed through bore-holes in the mounting plate.

Finger design

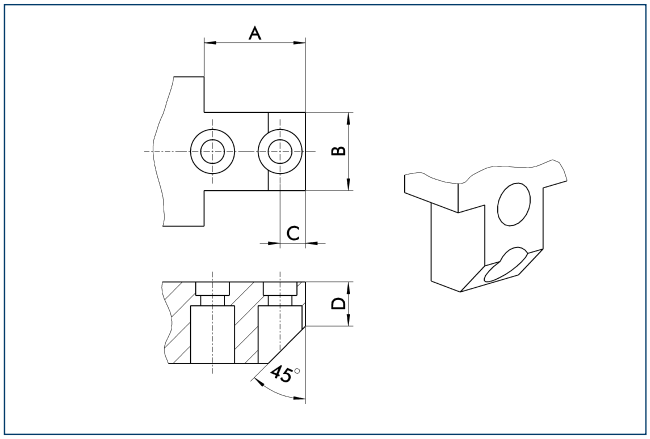

The drawing shows one posibility to design the gripper fingers.

A	B	C	D
[mm]	[mm]	[mm]	[mm]
30	43.5	19	27

SDV-P pressure maintenance valve

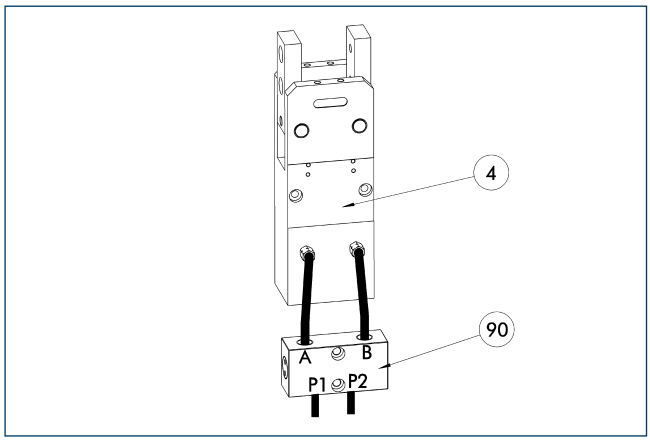

(4) Gripper

(90) SDV-P pressure maintenance valve

The SDV-P pressure maintenance valves ensure that the pressure in the piston chamber of pneumatic gripping, rotary, linear, and quick-change modules is maintained temporarily during an emergency stop.

Description	ID	
Pressure maintenance valve		
SDV-P 04	0403130	

Mounting kit for IN 80 proximity switches

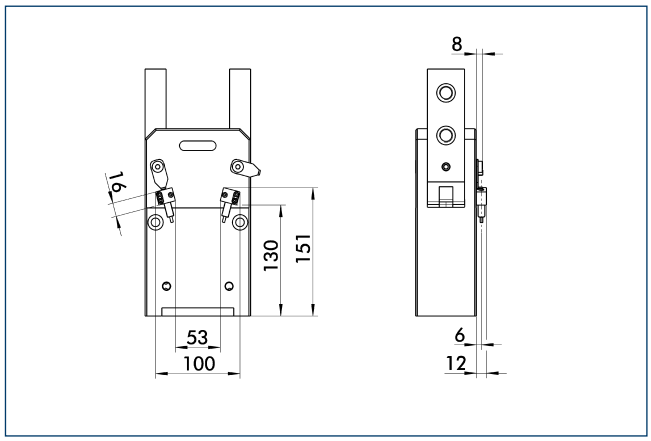

The mounting kit consists of brackets, control cams and appropriate fastening materials. Proximity switches have to be ordered separately.

Description	ID	
Mounting kit for proximity switch		
AS-PRG 125-IN80	0303628	

ⓘ This mounting kit needs to be ordered optionally as an accessory.

IN 80 inductive proximity switches

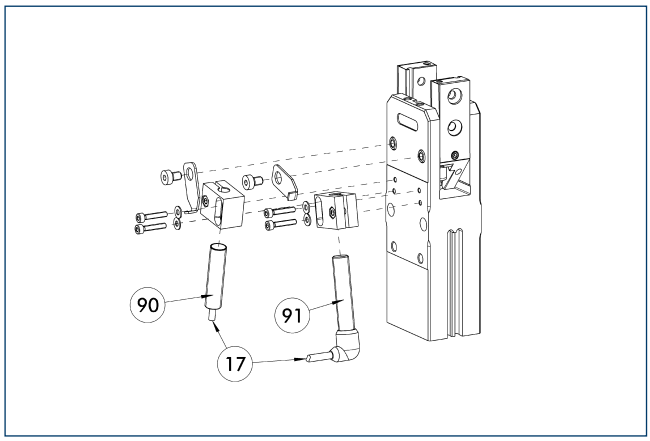

(17) Cable outlet
(91) IN ...-SA sensor
(90) IN ... sensor

Limit position monitor can be mounted with mounting kit.

Description	ID	Often combined
Mounting kit for proximity switch		
AS-PRG 125-IN80	0303628	
Inductive proximity switches		
IN 80-S-M12	0301578	
IN 80-S-M8	0301478	●
INK 80-S	0301550	
Inductive proximity switches with lateral outlet		
IN 80-S-M12-SA	0301587	
IN 80-S-M8-SA	0301483	●
INK 80-S-SA	0301566	
Cable extensions		
KV BG12-SG12 3P-0030-PNP	0301999	
KV BG12-SG12 3P-0060-PNP	0301998	
KV BW08-SG08 3P-0030-PNP	0301495	
KV BW08-SG08 3P-0100-PNP	0301496	
KV BW08-SG08 3P-0200-PNP	0301497	●
KV BW12-SG12 3P-0030-PNP	0301595	
KV BW12-SG12 3P-0100-PNP	0301596	
KV BW12-SG12 3P-0200-PNP	0301597	
Clip for plug / socket		
CLI-M12	0301464	
CLI-M8	0301463	
Connection cables		
KA BG08-L 3P-0300-PNP	0301622	●
KA BG08-L 3P-0500-PNP	0301623	
KA BG12-L 3P-0500-PNP	30016369	
KA BW08-L 3P-0300-PNP	0301594	
KA BW08-L 3P-0500-PNP	0301502	
KA BW12-L 3P-0300-PNP	0301503	
KA BW12-L 3P-0500-PNP	0301507	
Sensor distributor		
V2-M8	0301775	●
V2-M12	0301776	●

ⓘ Two sensors (closer/S) are required for each unit, plus extension cables as an option. This mounting kit needs to be ordered optionally as an accessory. Please note the minimum permitted bending radii for the sensor cables, which are generally 35 mm.

MMS electronic magnetic switches

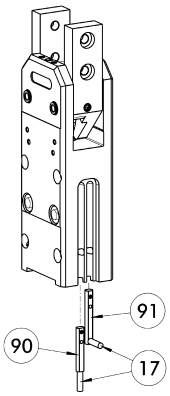

(17) Cable outlet
(91) MMS 22...-SA sensor
(90) MMS 22... sensor

End position monitoring for mounting in the C-slot.

Description	ID	Often combined
MMS electronic magnetic switches		
MMS 22-S-M8-PNP	0301032	●
MMSK 22-S-PNP	0301034	
MMS electronic magnetic switches with lateral cable outlet		
MMS 22-S-M8-PNP-SA	0301042	●
MMSK 22-S-PNP-SA	0301044	
Cable extensions		
KV BW08-SG08 3P-0030-PNP	0301495	
KV BW08-SG08 3P-0100-PNP	0301496	
KV BW08-SG08 3P-0200-PNP	0301497	●
Clip for plug / socket		
CLI-M8	0301463	
Connection cables		
KA BG08-L 3P-0300-PNP	0301622	●
KA BG08-L 3P-0500-PNP	0301623	
KA BW08-L 3P-0300-PNP	0301594	
KA BW08-L 3P-0500-PNP	0301502	
Sensor distributor		
V2-M8	0301775	●
V4-M8	0301746	
V8-M8	0301751	

ⓘ Two sensors (closer/S) are required for each unit, plus extension cables as an option. Please note the minimum permitted bending radii for the sensor cables, which are generally 35 mm.

MMS PI1 programmable magnetic switches

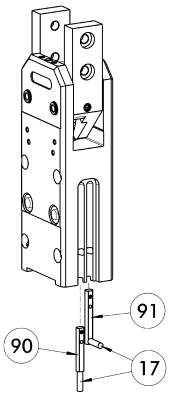

(17) Cable outlet
(91) MMS 22...-PI1-...-SA sensor
(90) MMS 22...-PI1-... sensor

Position query with one programmable position per sensor and electronics integrated in sensor. Programmable via MT magnet teaching tool (included in the scope of delivery) or ST plug teaching tool (optional). Limit position query mounted in C-groove. If the ST plug teaching tools are listed in the table, teaching can only take place with the ST plug teaching tools.

Description	ID	Often combined
MMS PI1 programmable magnetic switches		
MMS 22-PI1-S-M8-PNP	0301160	●
MMSK 22-PI1-S-PNP	0301162	
MMS PI1-HD programmable magnetic switches with stainless steel housing		
MMS 22-PI1-S-M8-PNP-HD	0301110	●
MMSK 22-PI1-S-PNP-HD	0301112	
MMS PI1 programmable magnetic switches with lateral cable outlet		
MMS 22-PI1-S-M8-PNP-SA	0301166	●
MMSK 22-PI1-S-PNP-SA	0301168	

ⓘ Two sensors (closer/S) are required for each unit, plus extension cables as an option. Please note the minimum permitted bending radii for the sensor cables, which are generally 35 mm. Connection cable, cable extensions, and sensor distributors can be found in the table for the MMS 22.

Flexible. Productive. Narrow.

GAP Angular Parallel Gripper

2-finger angular parallel gripper with gripper finger actuation of up to 90 degrees per jaw

Field of Application

Gripping and moving small to medium workpieces in low contamination environments

Advantages – Your benefit

Positively driven angle and parallel stroke in one function unit

Absolutely clamping in parallel stroke for the highest positioning accuracy

Stable kinematics for high power transmission and synchronized gripping

High gripping force in parallel stroke

Opening angle of jaws up to 180° for maximum flexibility in applications

Integration of a gripping force retaining device is optional for firm grip even in the event of power failure

End-position monitoring with optional standardised monitoring sets

Standardized mounting bores for numerous combinations with other system elements of the assembly technology

Sizes	Weight	Gripping force	Stroke per jaw	Workpiece weight
Quantity: 3	0.3 .. 1.33 kg	92 .. 430 N	1 .. 2 mm	0.46 .. 1.25 kg

Functional Description

The piston is moved up or down using compressed air. The base jaws are first put into a rotating and then in a parallel movement via the toggle-joint kinematics.

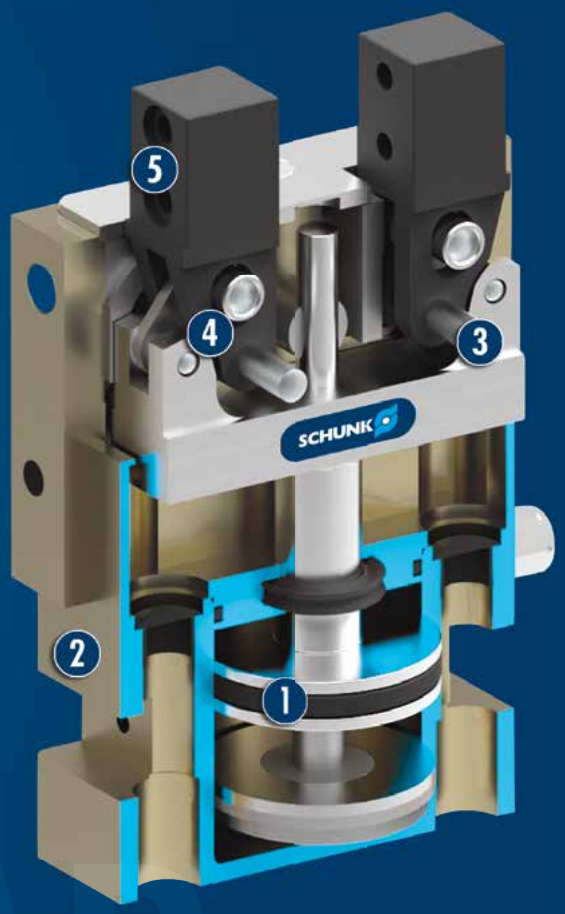

① **Drive**
Double-acting piston drive system

② **Housing**
Weight-optimized through application of high-strength aluminum alloy

③ **Base jaw guide**
for rotary movement over hardened cylindrical pivot pins

④ **Kinematics**
Positively driven toggle-joint kinematics for rotating and parallel movement

⑤ **Base jaws**
for the connection of workpiece-specific gripper fingers

CAD data, operating manuals and other current product documents are available at **www.schunk.com**

General Notes about the Series

Operating principle: Positively driven toggle-joint kinematics

Housing material: Aluminum alloy, anodized

Base jaw material: Steel

Actuation: pneumatic, with filtered compressed air as per DIN ISO 8573-1: 7 4 4

Warranty: 24 months (details, general terms and conditions and operating manuals can be downloaded at www.schunk.com)

Scope of delivery: Centering sleeves, O-rings for direct connection, assembly and operating manual with manufacturer's declaration

Gripping force maintenance device: possible with variants with mechanical maintenance of gripping force or SDV-P pressure maintenance valve

Gripping force: is the arithmetic total of the gripping force applied to each gripper jaw at distance P (see illustration).

Finger length: is measured from the upper edge of the gripper housing in the direction of the main axis. The breach of the max. permitted finger length can bring higher abrasion. The maximum permissible finger length applies up to the nominal operating pressure. With higher pressures, the finger length must be reduced proportionally to the nominal operating pressure.

Repeat accuracy: is defined as the spread of the limit position after 100 consecutive strokes.

Workpiece weight: is calculated for a force-fit connection with a coefficient of friction of 0.1 and a safety factor of 2 against slippage of the workpiece on acceleration due to gravity g. Considerably heavier workpiece weights are permitted with form-fit gripping.

Closing and opening times: are purely the times that the base jaws or fingers are in motion. Valve switching times, hose filling times or PLC reaction times are not included in the above times and must be taken into consideration when determining cycle times.

Application example

Electric linear portal to center or reposition small parts

1. ELS Cantilever Spindle Axis
2. GAP 2-Finger Angular Parallel Gripper
3. HSB Delta Linear Axis with toothed-belt drive

SCHUNK offers more ...

The following components make the product GAP even more productive – the suitable addition for the highest functionality, flexibility, reliability, and controlled production.

Sensor System

Pillar Assembly Systems

Adapter Plate

Sensor Cables

LPP Line Gantry pneumatic

Centering Sleeves

SDV-P Pressure Maintenance Valve

Fittings

LM Linear Module

SRU-plus Rotary Actuator

ⓘ Further information regarding the products can be found on the following product pages or at www.schunk.com. Please contact us for further information: SCHUNK technical hotline +49-7133-103-2696

Options and special Information

Gripping force maintenance version AS / IS: The mechanical gripping force maintenance version ensures a minimum gripping force also in the case of a drop in pressure. In the AS / S version this has the effect of a closing force, in the IS version of an opening force.
Version of shock absorber: There is a shock absorber version available for especially absorption-intensive movements. Please contact us in this case.
As standard, this module can be combined with numerous components from the modular system. For more information visit www.schunk.com. We would be happy to assist you.

GAP 20

SCHUNK Grippers pneumatic | 2-Finger Radial Grippers | Angular Parallel Gripper

Gripping force, O.D. gripping

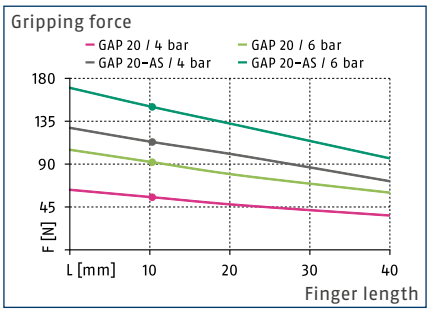

Max. admissible inertia J*

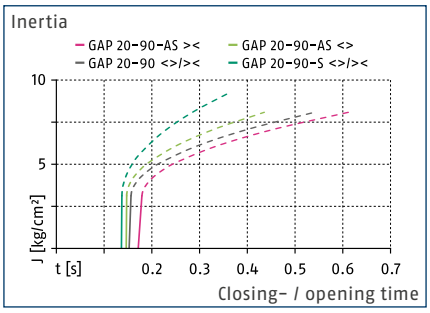

Finger load

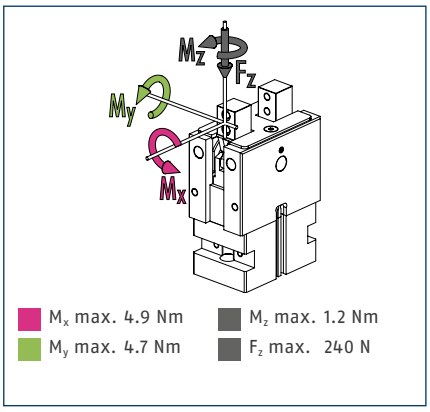

ⓘ The indicated moments and forces are static values, apply per base jaw and may occur simultaneously. M_y may arise in addition to the moment generated by the gripping force itself. If the max. permitted finger weight is exceeded, it is impreative to throttle the air supply so that the jaw movement occurs without any hitting or bouncing. Service life may be reduced.

Technical data

Description		GAP 20-030	GAP 20-060	GAP 20-090
ID		0314600	0314601	0314602
Stroke per jaw	[mm]	1	1	1
Closing- / opening force	[N]	92/-	92/-	92/-
Opening angle per jaw	[°]	30	60	90
Weight	[kg]	0.3	0.3	0.3
Recommended workpiece weight	[kg]	0.46	0.46	0.46
Fluid consumption per double stroke	[cm³]	3	5	7
min. / max. operating pressure	[bar]	2.5/7	2.5/7	2.5/7
Nominal operating pressure	[bar]	6	6	6
Closing- / opening time	[s]	0.09/0.09	0.12/0.12	0.15/0.15
max. permitted finger length	[mm]	40	40	40
max. permitted weight per finger	[kg]	0.1	0.1	0.1
max. mass moment of inertia per jaw*	[kgcm²]	3.12	3.12	3.12
IP class		40	40	40
min. / max. ambient temperature	[°C]	5/60	5/60	5/60
Repeat accuracy	[mm]	0.05	0.05	0.05
Options and their characteristics				
Gripping force maintenance version		GAP 20-030-AS	GAP 20-060-AS	GAP 20-090-AS
ID		0314603	0314604	0314605
Closing- / opening force	[N]	150/-	150/-	150/-
min. spring force	[N]	58	58	58
Weight	[kg]	0.39	0.39	0.39
Fluid consumption per double stroke	[cm³]	4	7	10
min. / max. operating pressure	[bar]	4.5/6.5	4.5/6.5	4.5/6.5
Closing- / opening time	[s]	0.12/0.08	0.15/0.11	0.17/0.14
Version of shock absorber		GAP 20-030-S	GAP 20-060-S	GAP 20-090-S
ID		0314606	0314607	0314608
Weight	[kg]	0.33	0.33	0.33
Closing- / opening time	[s]	0.07/0.07	0.1/0.1	0.13/0.13

*The unit can be actuated without an external customized throttling at the given value of max. mass moment of inertia per jaw. In case of higher mass moments of inertia, an additional throttling is possible.

Main view

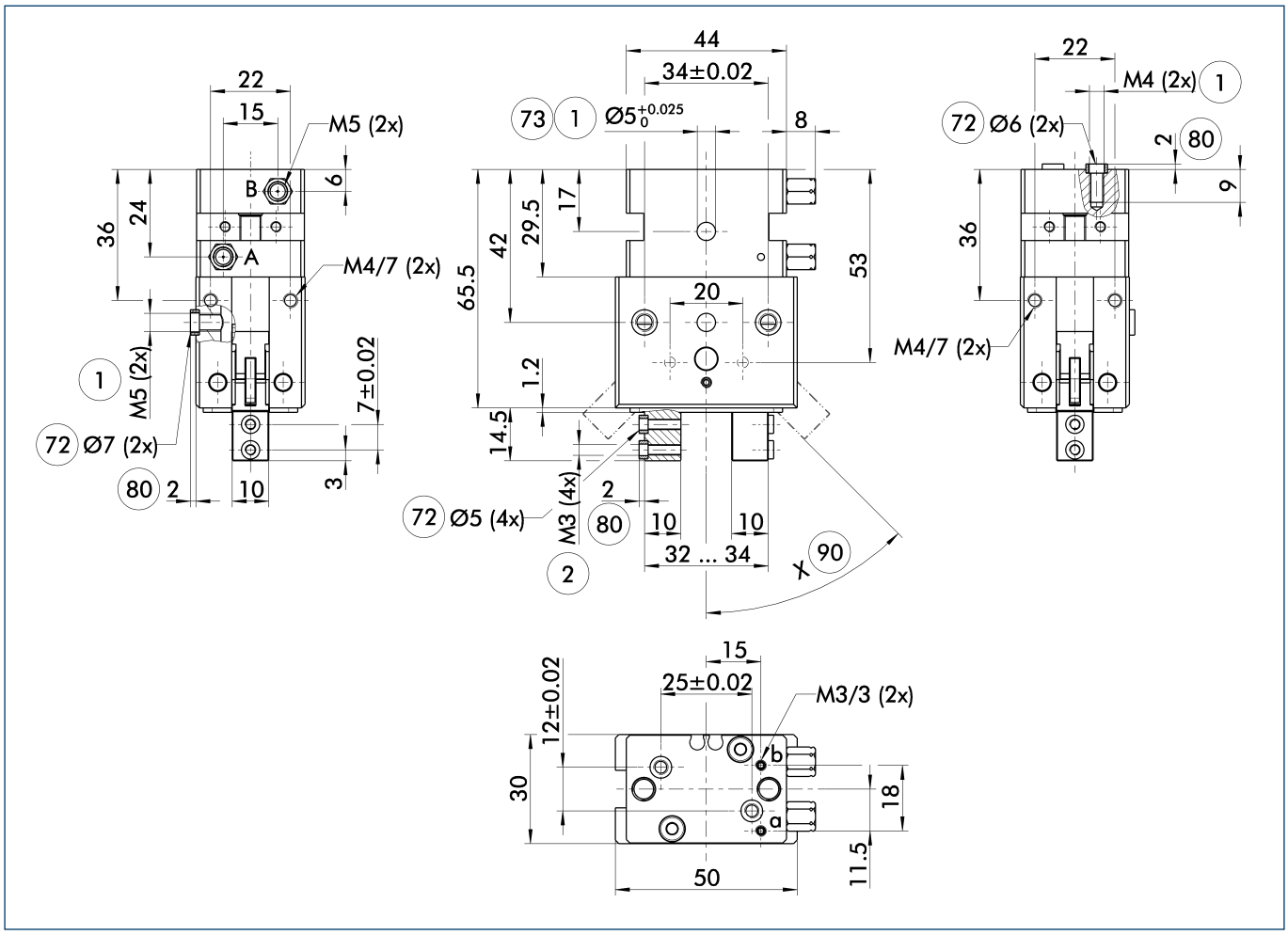

The drawing shows the gripper in the basic version with closed jaws, without dimensional consideration of the options described below.

ⓘ The SDV-P pressure maintenance valve can also be used for I.D. or O.D. gripping alternatively or in addition to the spring-loaded, mechanical gripping force maintenance device (see catalog section on "Accessories").

A, a Main / direct connection, gripper opening

B, b Main / direct connection, gripper closing

(1) Gripper connection

(2) Finger connection

(72) Fit for centering sleeves

(73) Fit for centering pins

(80) Depth of the centering sleeve hole in the mating part

(90) See the technical data for "Opening angle per jaw"

Max. admissible inertia J*

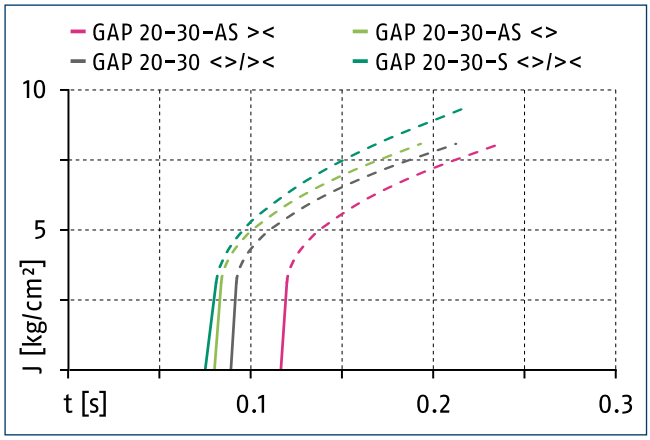

*The unit can be actuated without an external customized throttling at the given value of max. mass moment of inertia per jaw. In case of higher mass moments of inertia, an additional throttling is possible.

Max. admissible inertia J*

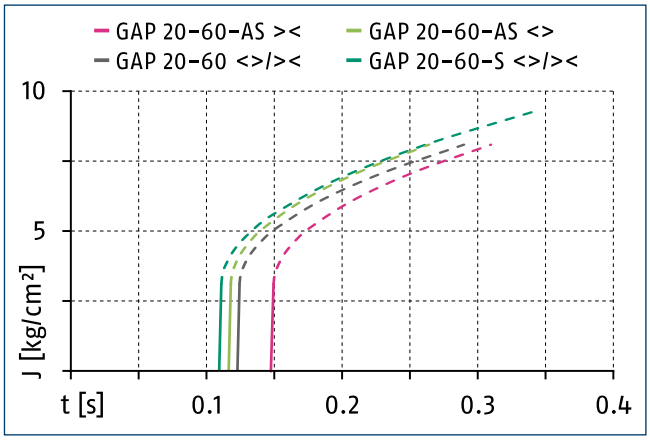

*The unit can be actuated without an external customized throttling at the given value of max. mass moment of inertia per jaw. In case of higher mass moments of inertia, an additional throttling is possible.

Hose-free direct connection M3

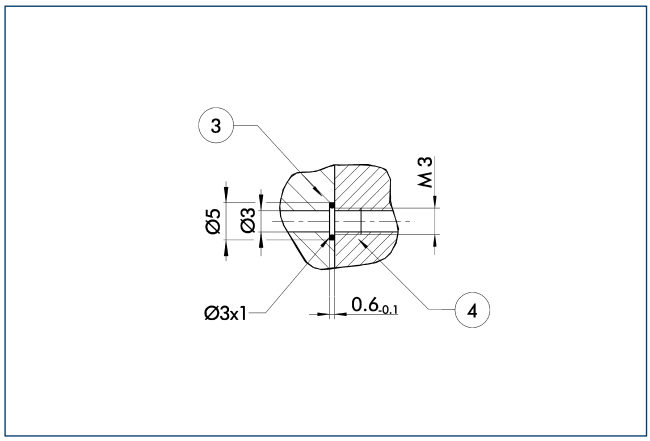

(3) Adapter (4) Gripper

The direct connection is used for supplying compressed air without hoses. Instead, the pressure medium is fed through bore-holes in the mounting plate.

Gripping force maintenance device AS

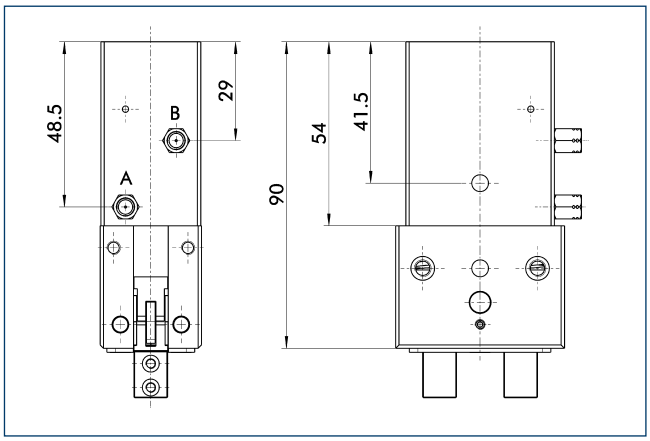

The mechanical gripping force maintenance device ensures that a minimum clamping force will be applied even if there is a drop in pressure. This acts on the closing force. The gripping force maintenance device can also be used to increase gripping force or for single actuated gripping.

Version with shock absorbers

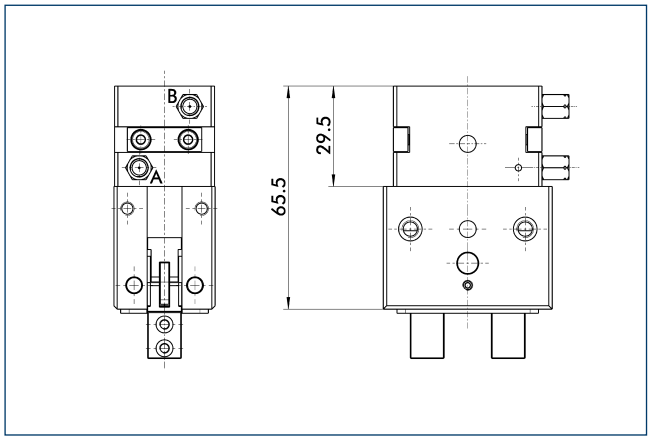

The opening movement of the fingers is braked with hydraulic shock absorbers in the shock-absorbing version. Quicker opening time can be achieved as a result.

MMS electronic magnetic switches

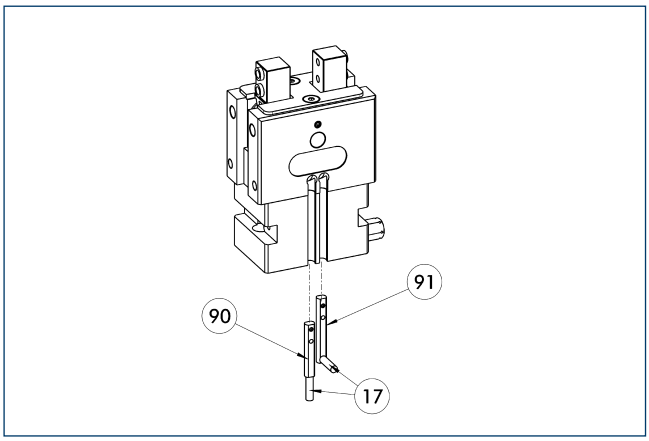

17 Cable outlet
91 MMS 22...-SA sensor
90 MMS 22... sensor

End position monitoring for mounting in the C-slot.

Description	ID	Often combined
MMS electronic magnetic switches		
MMS 22-S-M8-PNP	0301032	●
MMSK 22-S-PNP	0301034	
MMS electronic magnetic switches with lateral cable outlet		
MMS 22-S-M8-PNP-SA	0301042	●
MMSK 22-S-PNP-SA	0301044	
Cable extensions		
KV BW08-SG08 3P-0030-PNP	0301495	
KV BW08-SG08 3P-0100-PNP	0301496	
KV BW08-SG08 3P-0200-PNP	0301497	●
Clip for plug / socket		
CLI-M8	0301463	
Connection cables		
KA BG08-L 3P-0300-PNP	0301622	●
KA BG08-L 3P-0500-PNP	0301623	
KA BW08-L 3P-0300-PNP	0301594	
KA BW08-L 3P-0500-PNP	0301502	
Sensor distributor		
V2-M8	0301775	●
V4-M8	0301746	
V8-M8	0301751	

ⓘ Two sensors (closer/S) are required for each unit, plus extension cables as an option. Please note the minimum permitted bending radii for the sensor cables, which are generally 35 mm.

MMS PI1 programmable magnetic switches

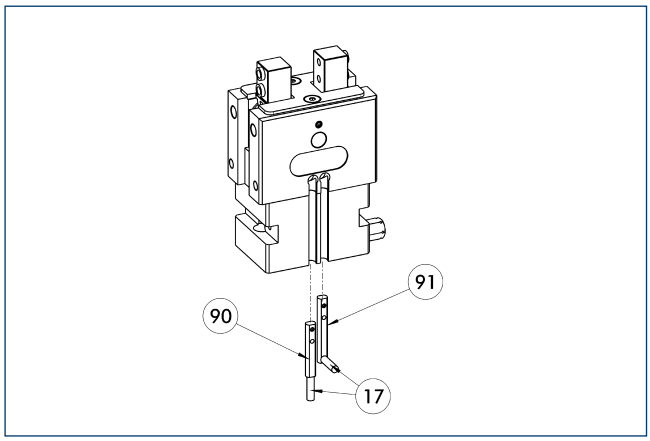

(17) Cable outlet
(91) MMS 22...-PI1-...-SA sensor
(90) MMS 22...-PI1-... sensor

Position query with one programmable position per sensor and electronics integrated in sensor. Programmable via MT magnet teaching tool (included in the scope of delivery) or ST plug teaching tool (optional). Limit position query mounted in C-groove. If the ST plug teaching tools are listed in the table, teaching can only take place with the ST plug teaching tools.

Description	ID	Often combined
MMS PI1 programmable magnetic switches		
MMS 22-PI1-S-M8-PNP	0301160	●
MMSK 22-PI1-S-PNP	0301162	
MMS PI1-HD programmable magnetic switches with stainless steel housing		
MMS 22-PI1-S-M8-PNP-HD	0301110	●
MMSK 22-PI1-S-PNP-HD	0301112	
MMS PI1 programmable magnetic switches with lateral cable outlet		
MMS 22-PI1-S-M8-PNP-SA	0301166	●
MMSK 22-PI1-S-PNP-SA	0301168	

ⓘ Two sensors (closer/S) are required for each unit, plus extension cables as an option. Please note the minimum permitted bending radii for the sensor cables, which are generally 35 mm. Connection cable, cable extensions, and sensor distributors can be found in the table for the MMS 22.

MMS PI2 programmable magnetic switches

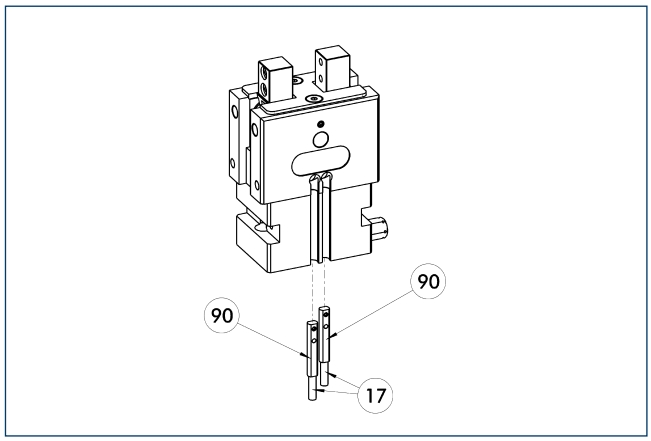

(17) Cable outlet
(90) MMS 22...-PI2-... sensor

Position query with two programmable positions per sensor and electronics integrated in sensor. Programmable via MT magnet teaching tool (included in the scope of delivery) or ST plug teaching tool (optional). Limit position query mounted in C-groove. If the ST plug teaching tools are listed in the table, teaching can only take place with the ST plug teaching tools.

Description	ID	Often combined
MMS PI2 programmable magnetic switches		
MMS 22-PI2-S-M8-PNP	0301180	●
MMSK 22-PI2-S-PNP	0301182	
MMS PI2-HD programmable magnetic switches with stainless steel housing		
MMS 22-PI2-S-M8-PNP-HD	0301130	●
MMSK 22-PI2-S-PNP-HD	0301132	

ⓘ Per unit one sensor (closer/S) is required, optionally a cable extension. Please note the minimum permitted bending radii for the sensor cables, which are generally 35 mm. Connection cable, cable extensions, and sensor distributors can be found in the table for the MMS-P 22.

MMS-P programmable magnetic switches

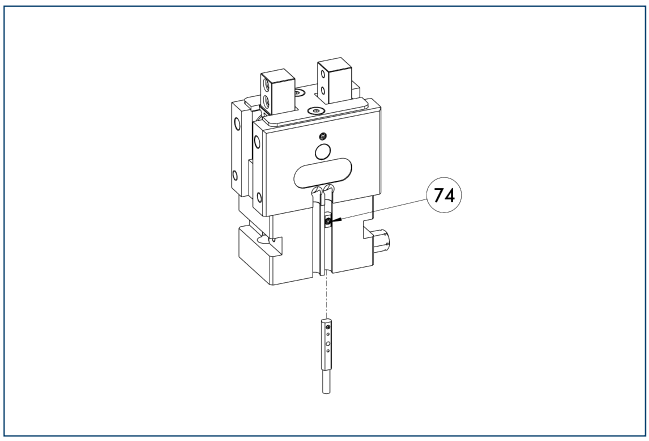

74 Stop for MMS-P

Position monitoring with two programmable positions per sensor. The end position monitoring is mounted in the C-slot.

Description	ID	Often combined
MMS-P programmable magnetic switches		
MMSK-P 22-S-PNP	0301371	
MMS-P 22-S-M8-PNP	0301370	●
Clip for plug / socket		
CLI-M8	0301463	
Connection cables		
KA BG08-L 4P-0500	0307767	●
KA BG08-L 4P-1000	0307768	
KA BW08-L 4P-0500	0307765	
KA BW08-L 4P-1000	0307766	
Sensor distributor		
V2-M8-4P-2XM8-3P	0301380	

ⓘ Per unit one sensor (closer/S) is required, optionally a cable extension. Please note the minimum permitted bending radii for the sensor cables, which are generally 35 mm.

GAP 28

SCHUNK Grippers pneumatic | 2-Finger Radial Grippers | Angular Parallel Gripper

Gripping force, O.D. gripping

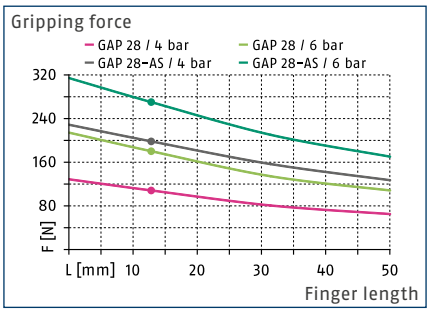

Max. admissible inertia J*

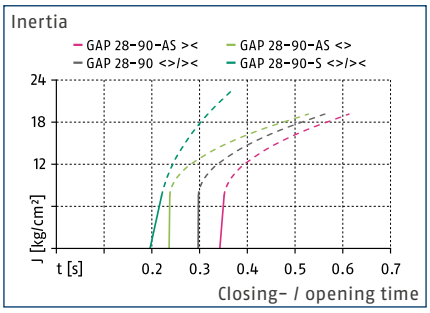

Finger load

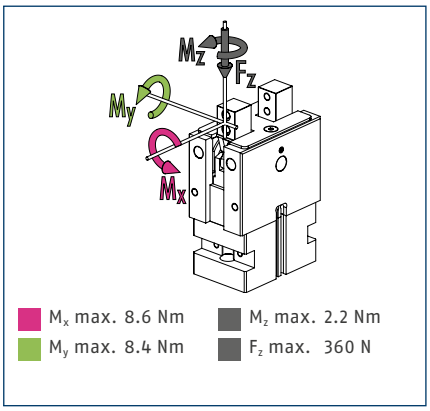

ⓘ The indicated moments and forces are static values, apply per base jaw and may occur simultaneously. M_y may arise in addition to the moment generated by the gripping force itself. If the max. permitted finger weight is exceeded, it is impreative to throttle the air supply so that the jaw movement occurs without any hitting or bouncing. Service life may be reduced.

Technical data

Description		GAP 28-030	GAP 28-060	GAP 28-090
ID		0314610	0314611	0314612
Stroke per jaw	[mm]	1.5	1.5	1.5
Closing- / opening force	[N]	180/-	180/-	180/-
Opening angle per jaw	[°]	30	60	90
Weight	[kg]	0.54	0.54	0.54
Recommended workpiece weight	[kg]	0.9	0.9	0.9
Fluid consumption per double stroke	[cm³]	6.5	10.5	15
min. / max. operating pressure	[bar]	2.5/7	2.5/7	2.5/7
Nominal operating pressure	[bar]	6	6	6
Closing- / opening time	[s]	0.17/0.17	0.23/0.23	0.3/0.3
max. permitted finger length	[mm]	50	50	50
max. permitted weight per finger	[kg]	0.17	0.17	0.17
max. mass moment of inertia per jaw*	[kgcm²]	7.45	7.45	7.45
IP class		40	40	40
min. / max. ambient temperature	[°C]	5/60	5/60	5/60
Repeat accuracy	[mm]	0.05	0.05	0.05
Options and their characteristics				
Gripping force maintenance version		GAP 28-030-AS	GAP 28-060-AS	GAP 28-090-AS
ID		0314613	0314614	0314615
Closing- / opening force	[N]	270/-	270/-	270/-
min. spring force	[N]	90	90	90
Weight	[kg]	0.7	0.7	0.7
Fluid consumption per double stroke	[cm³]	9	15.5	22
min. / max. operating pressure	[bar]	4.5/6.5	4.5/6.5	4.5/6.5
Closing- / opening time	[s]	0.2/0.16	0.26/0.2	0.35/0.24
Version of shock absorber		GAP 28-030-S	GAP 28-060-S	GAP 28-090-S
ID		0314616	0314617	0314618
Weight	[kg]	0.58	0.58	0.58
Closing- / opening time	[s]	0.13/0.13	0.15/0.15	0.2/0.2

*The unit can be actuated without an external customized throttling at the given value of max. mass moment of inertia per jaw. In case of higher mass moments of inertia, an additional throttling is possible.

Main view

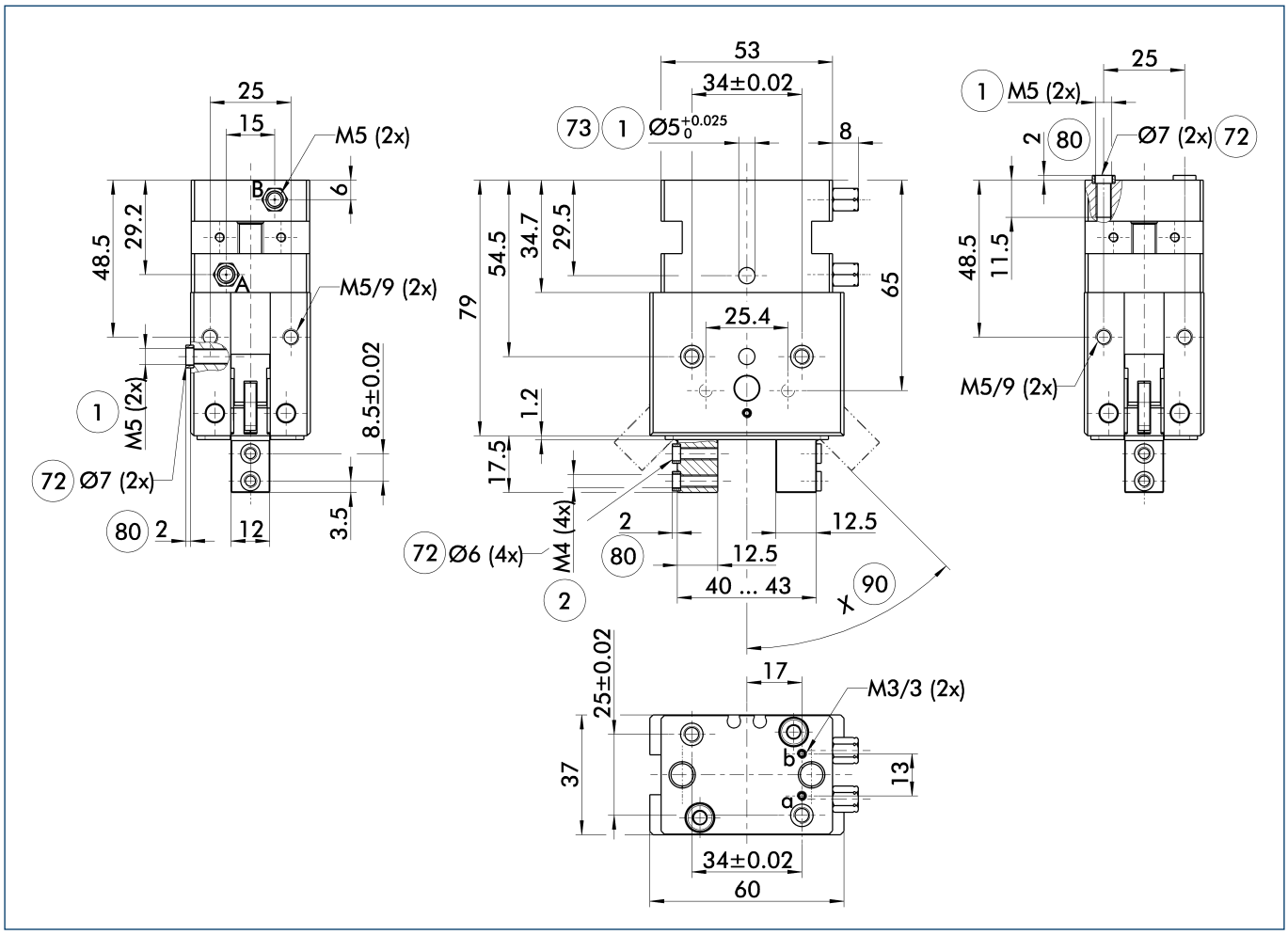

The drawing shows the gripper in the basic version with closed jaws, without dimensional consideration of the options described below.

ⓘ The SDV-P pressure maintenance valve can also be used for I.D. or O.D. gripping alternatively or in addition to the spring-loaded, mechanical gripping force maintenance device (see catalog section on "Accessories").

A, a Main / direct connection, gripper opening

B, b Main / direct connection, gripper closing

(1) Gripper connection

(2) Finger connection

(72) Fit for centering sleeves

(73) Fit for centering pins

(80) Depth of the centering sleeve hole in the mating part

(90) See the technical data for "Opening angle per jaw"

Max. admissible inertia J*

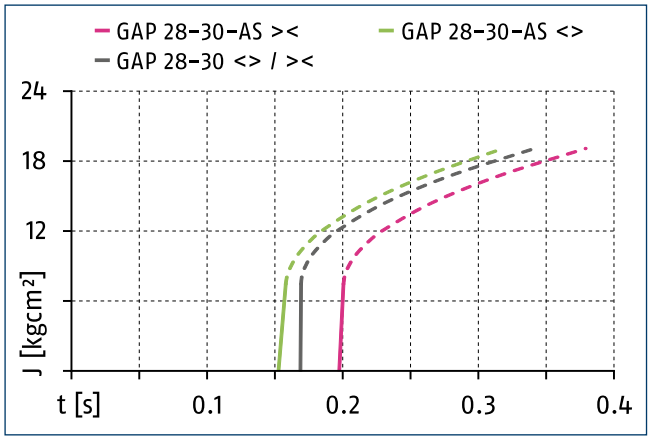

*The unit can be actuated without an external customized throttling at the given value of max. mass moment of inertia per jaw. In case of higher mass moments of inertia, an additional throttling is possible.

Max. admissible inertia J*

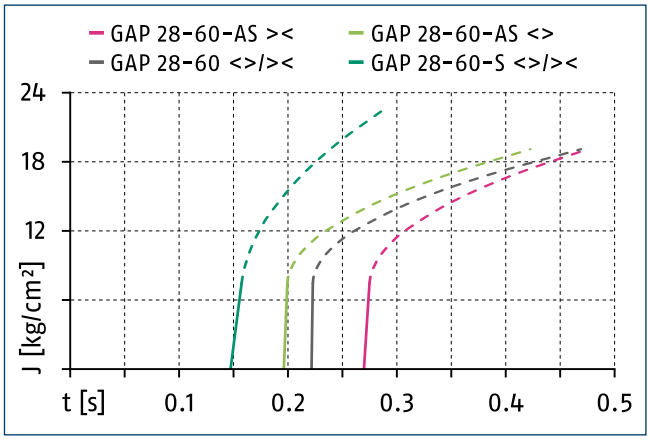

*The unit can be actuated without an external customized throttling at the given value of max. mass moment of inertia per jaw. In case of higher mass moments of inertia, an additional throttling is possible.

Hose-free direct connection M3

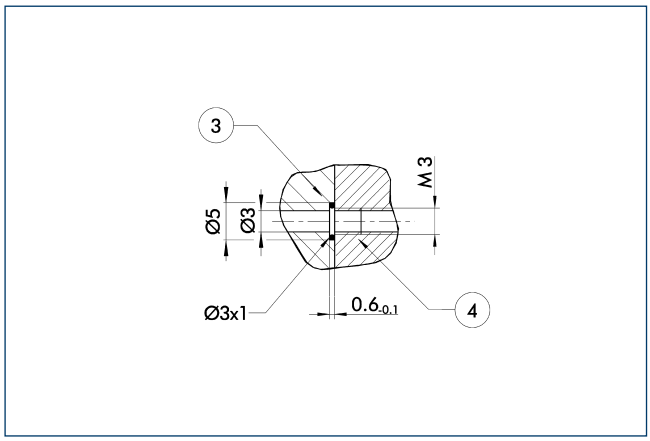

(3) Adapter (4) Gripper

The direct connection is used for supplying compressed air without hoses. Instead, the pressure medium is fed through bore-holes in the mounting plate.

Gripping force maintenance device AS

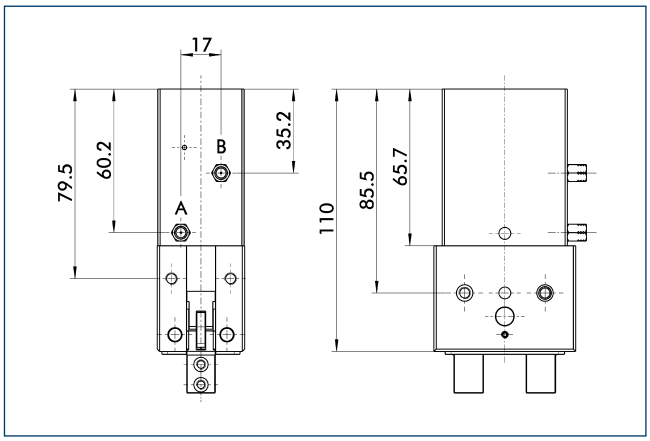

The mechanical gripping force maintenance device ensures that a minimum clamping force will be applied even if there is a drop in pressure. This acts on the closing force. The gripping force maintenance device can also be used to increase gripping force or for single actuated gripping.

Version with shock absorbers

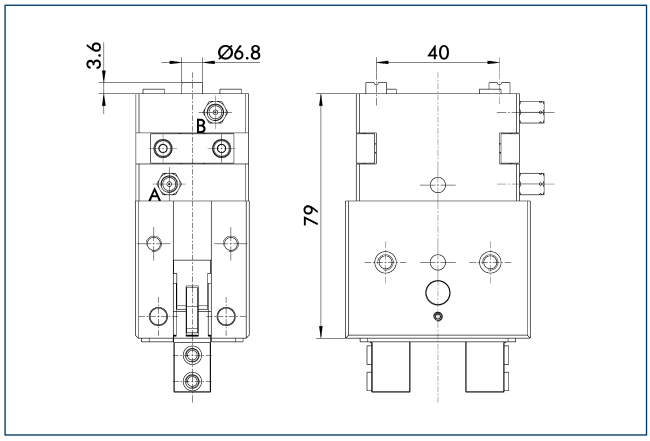

The opening movement of the fingers is braked with hydraulic shock absorbers in the shock-absorbing version. Quicker opening time can be achieved as a result.

MMS electronic magnetic switches

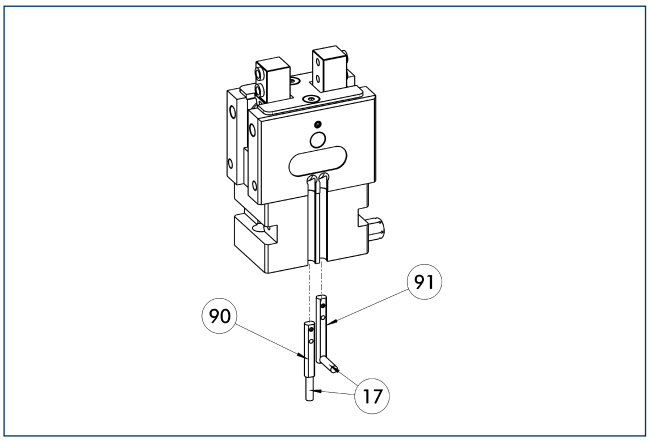

17 Cable outlet
91 MMS 22...-SA sensor
90 MMS 22... sensor

End position monitoring for mounting in the C-slot.

Description	ID	Often combined
MMS electronic magnetic switches		
MMS 22-S-M8-PNP	0301032	●
MMSK 22-S-PNP	0301034	
MMS electronic magnetic switches with lateral cable outlet		
MMS 22-S-M8-PNP-SA	0301042	●
MMSK 22-S-PNP-SA	0301044	
Cable extensions		
KV BW08-SG08 3P-0030-PNP	0301495	
KV BW08-SG08 3P-0100-PNP	0301496	
KV BW08-SG08 3P-0200-PNP	0301497	●
Clip for plug / socket		
CLI-M8	0301463	
Connection cables		
KA BG08-L 3P-0300-PNP	0301622	●
KA BG08-L 3P-0500-PNP	0301623	
KA BW08-L 3P-0300-PNP	0301594	
KA BW08-L 3P-0500-PNP	0301502	
Sensor distributor		
V2-M8	0301775	●
V4-M8	0301746	
V8-M8	0301751	

ⓘ Two sensors (closer/S) are required for each unit, plus extension cables as an option. Please note the minimum permitted bending radii for the sensor cables, which are generally 35 mm.

MMS PI1 programmable magnetic switches

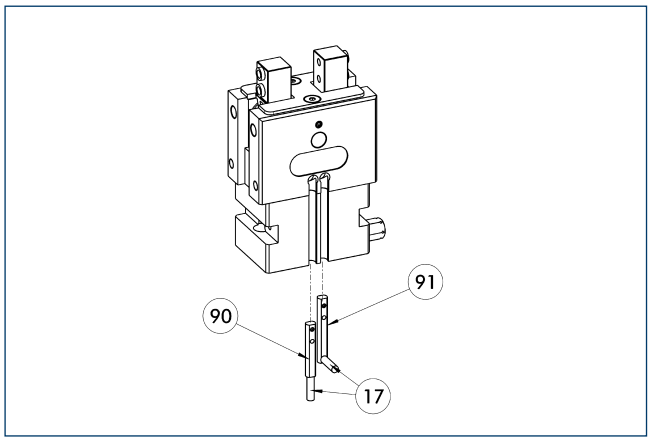

(17) Cable outlet
(91) MMS 22...-PI1-...-SA sensor
(90) MMS 22...-PI1-... sensor

Position query with one programmable position per sensor and electronics integrated in sensor. Programmable via MT magnet teaching tool (included in the scope of delivery) or ST plug teaching tool (optional). Limit position query mounted in C-groove. If the ST plug teaching tools are listed in the table, teaching can only take place with the ST plug teaching tools.

Description	ID	Often combined
MMS PI1 programmable magnetic switches		
MMS 22-PI1-S-M8-PNP	0301160	●
MMSK 22-PI1-S-PNP	0301162	
MMS PI1-HD programmable magnetic switches with stainless steel housing		
MMS 22-PI1-S-M8-PNP-HD	0301110	●
MMSK 22-PI1-S-PNP-HD	0301112	
MMS PI1 programmable magnetic switches with lateral cable outlet		
MMS 22-PI1-S-M8-PNP-SA	0301166	●
MMSK 22-PI1-S-PNP-SA	0301168	

ⓘ Two sensors (closer/S) are required for each unit, plus extension cables as an option. Please note the minimum permitted bending radii for the sensor cables, which are generally 35 mm. Connection cable, cable extensions, and sensor distributors can be found in the table for the MMS 22.

MMS PI2 programmable magnetic switches

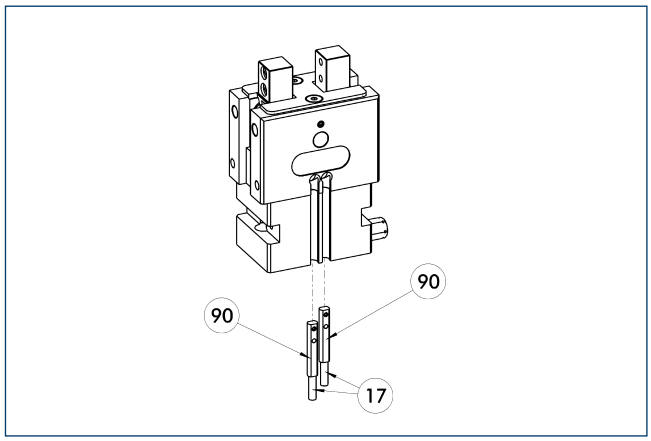

(17) Cable outlet
(90) MMS 22...-PI2-... sensor

Position query with two programmable positions per sensor and electronics integrated in sensor. Programmable via MT magnet teaching tool (included in the scope of delivery) or ST plug teaching tool (optional). Limit position query mounted in C-groove. If the ST plug teaching tools are listed in the table, teaching can only take place with the ST plug teaching tools.

Description	ID	Often combined
MMS PI2 programmable magnetic switches		
MMS 22-PI2-S-M8-PNP	0301180	●
MMSK 22-PI2-S-PNP	0301182	
MMS PI2-HD programmable magnetic switches with stainless steel housing		
MMS 22-PI2-S-M8-PNP-HD	0301130	●
MMSK 22-PI2-S-PNP-HD	0301132	

ⓘ Per unit one sensor (closer/S) is required, optionally a cable extension. Please note the minimum permitted bending radii for the sensor cables, which are generally 35 mm. Connection cable, cable extensions, and sensor distributors can be found in the table for the MMS-P 22.

MMS-P programmable magnetic switches

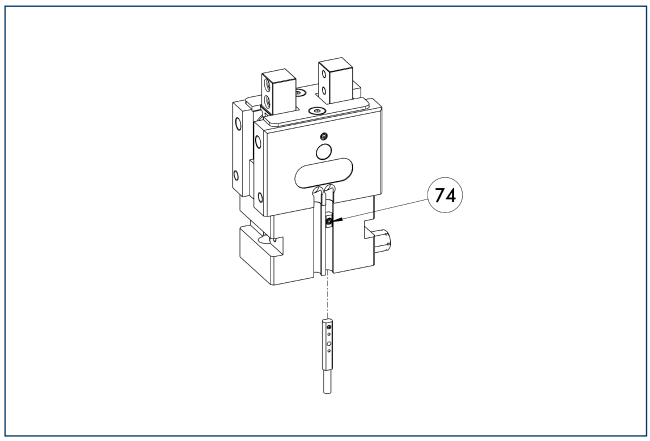

74 Stop for MMS-P

Position monitoring with two programmable positions per sensor. The end position monitoring is mounted in the C-slot.

Description	ID	Often combined
MMS-P programmable magnetic switches		
MMSK-P 22-S-PNP	0301371	
MMS-P 22-S-M8-PNP	0301370	●
Clip for plug / socket		
CLI-M8	0301463	
Connection cables		
KA BG08-L 4P-0500	0307767	●
KA BG08-L 4P-1000	0307768	
KA BW08-L 4P-0500	0307765	
KA BW08-L 4P-1000	0307766	
Sensor distributor		
V2-M8-4P-2XM8-3P	0301380	

ⓘ Per unit one sensor (closer/S) is required, optionally a cable extension. Please note the minimum permitted bending radii for the sensor cables, which are generally 35 mm.

GAP 32

SCHUNK Grippers pneumatic | 2-Finger Radial Grippers | Angular Parallel Gripper

Gripping force, O.D. gripping

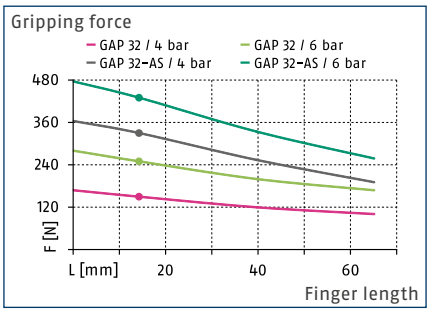

Max. admissible inertia J*

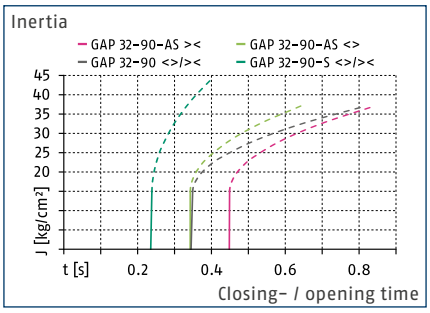

Finger load

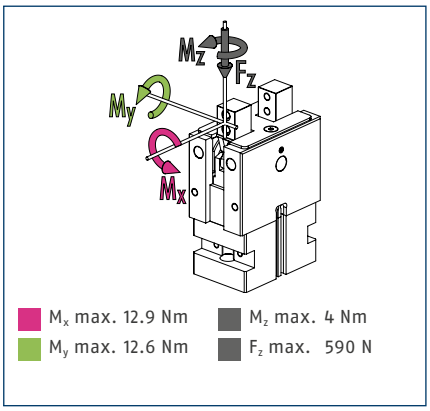

ⓘ The indicated moments and forces are static values, apply per base jaw and may occur simultaneously. M_y may arise in addition to the moment generated by the gripping force itself. If the max. permitted finger weight is exceeded, it is impreative to throttle the air supply so that the jaw movement occurs without any hitting or bouncing. Service life may be reduced.

Technical data

Description		GAP 32-030	GAP 32-060	GAP 32-090
ID		0314620	0314621	0314622
Stroke per jaw	[mm]	2	2	2
Closing- / opening force	[N]	250/-	250/-	250/-
Opening angle per jaw	[°]	30	60	90
Weight	[kg]	1.03	1.03	1.03
Recommended workpiece weight	[kg]	1.25	1.25	1.25
Fluid consumption per double stroke	[cm³]	11	18	25
min. / max. operating pressure	[bar]	2.5/7	2.5/7	2.5/7
Nominal operating pressure	[bar]	6	6	6
Closing- / opening time	[s]	0.22/0.22	0.28/0.28	0.35/0.35
max. permitted finger length	[mm]	65	65	65
max. permitted weight per finger	[kg]	0.25	0.25	0.25
max. mass moment of inertia per jaw*	[kgcm²]	14.87	14.87	14.87
IP class		40	40	40
min. / max. ambient temperature	[°C]	5/60	5/60	5/60
Repeat accuracy	[mm]	0.05	0.05	0.05
Options and their characteristics				
Gripping force maintenance version		GAP 32-030-AS	GAP 32-060-AS	GAP 32-090-AS
ID		0314623	0314624	0314625
Closing- / opening force	[N]	430/-	430/-	430/-
min. spring force	[N]	180	180	180
Weight	[kg]	1.33	1.33	1.33
Fluid consumption per double stroke	[cm³]	16	26	36.5
min. / max. operating pressure	[bar]	4.5/6.5	4.5/6.5	4.5/6.5
Closing- / opening time	[s]	0.25/0.2	0.35/0.27	0.45/0.34
Version of shock absorber		GAP 32-030-S	GAP 32-060-S	GAP 32-090-S
ID		0314626	0314627	0314628
Weight	[kg]	1.1	1.1	1.1
Closing- / opening time	[s]	0.14/0.14	0.21/0.21	0.24/0.24

*The unit can be actuated without an external customized throttling at the given value of max. mass moment of inertia per jaw. In case of higher mass moments of inertia, an additional throttling is possible.

Main view

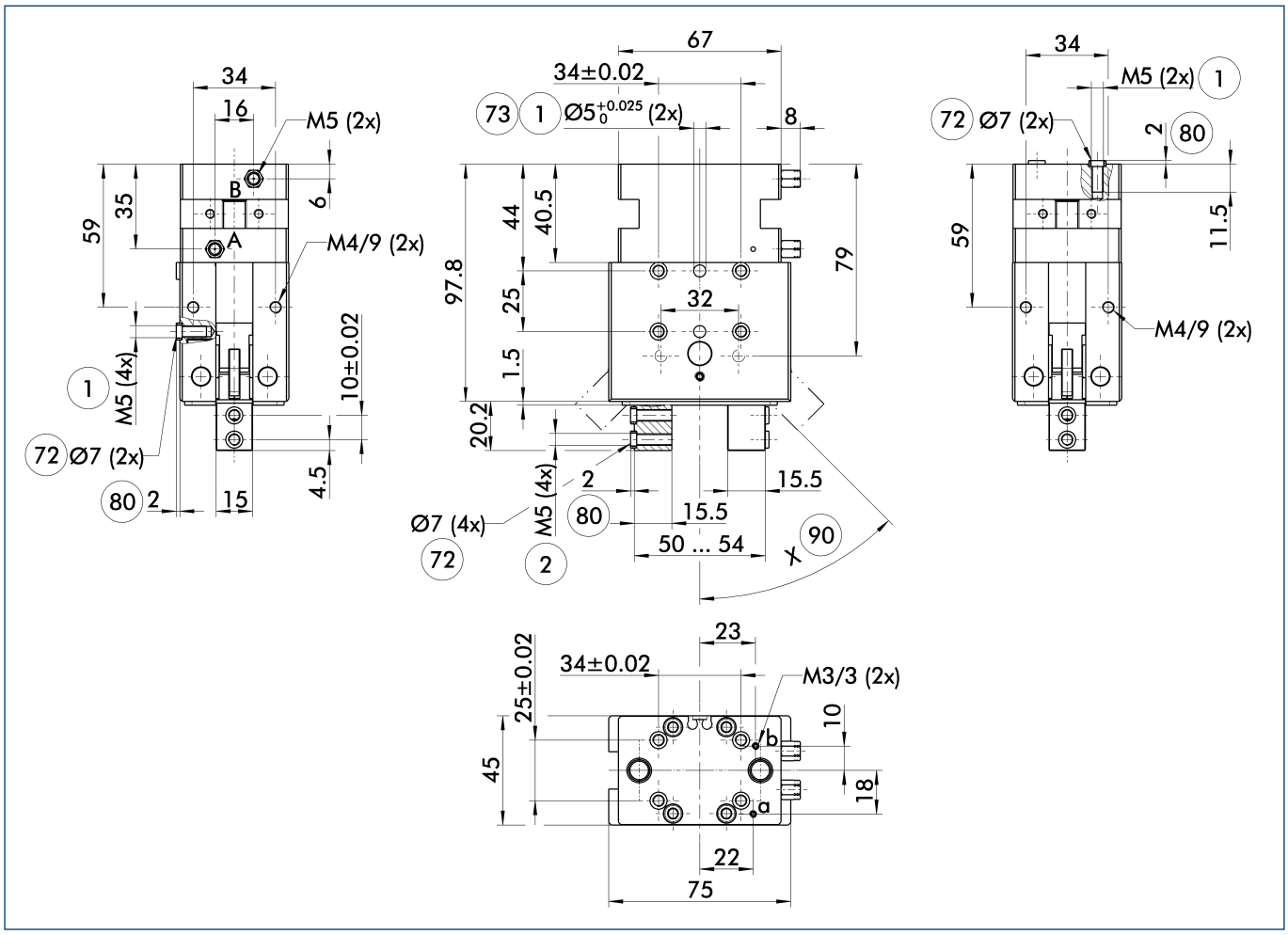

The drawing shows the gripper in the basic version with closed jaws, without dimensional consideration of the options described below.

ⓘ The SDV-P pressure maintenance valve can also be used for I.D. or O.D. gripping alternatively or in addition to the spring-loaded, mechanical gripping force maintenance device (see catalog section on "Accessories").

A, a Main / direct connection, gripper opening

B, b Main / direct connection, gripper closing

(1) Gripper connection

(2) Finger connection

(72) Fit for centering sleeves

(73) Fit for centering pins

(80) Depth of the centering sleeve hole in the mating part

(90) See the technical data for "Opening angle per jaw"

Max. admissible inertia J*

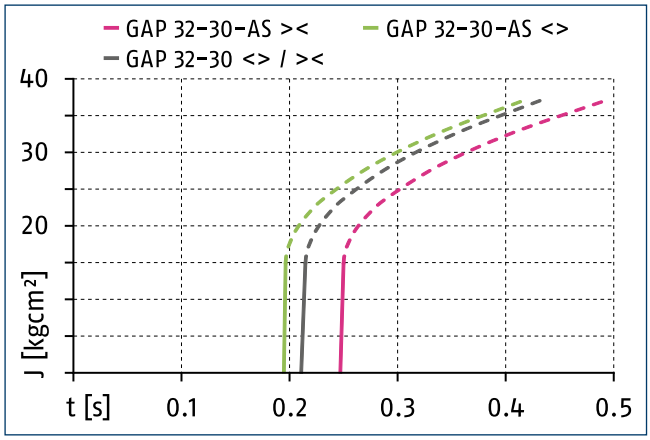

*The unit can be actuated without an external customized throttling at the given value of max. mass moment of inertia per jaw. In case of higher mass moments of inertia, an additional throttling is possible.

Max. admissible inertia J*

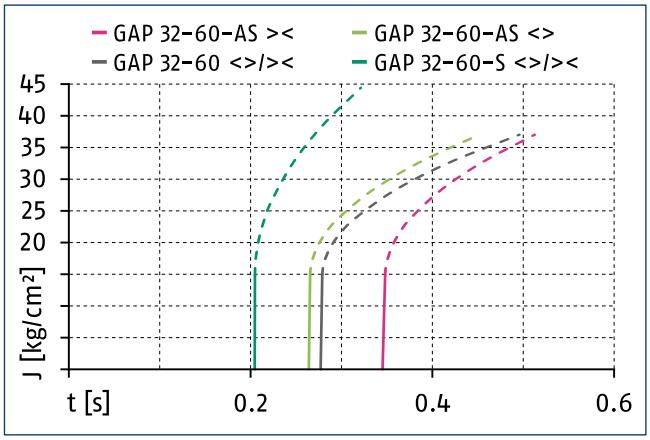

*The unit can be actuated without an external customized throttling at the given value of max. mass moment of inertia per jaw. In case of higher mass moments of inertia, an additional throttling is possible.

Hose-free direct connection M3

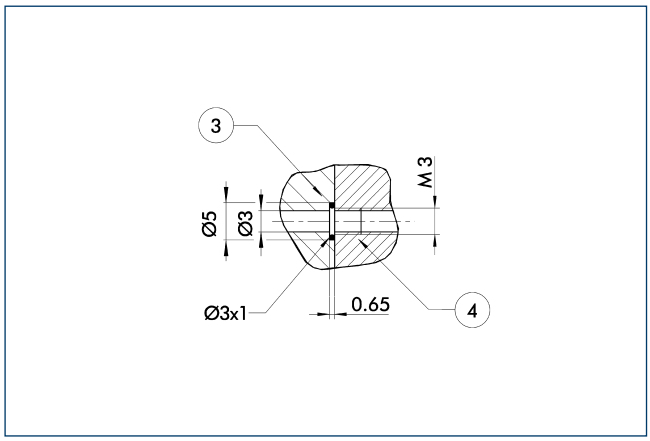

3 Adapter

4 Rotary actuator

The direct connection is used for supplying compressed air without hoses. Instead, the pressure medium is fed through bore-holes in the mounting plate.

Gripping force maintenance device AS

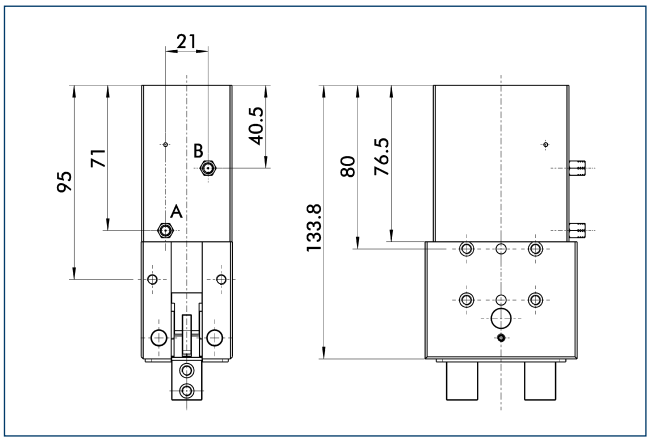

The mechanical gripping force maintenance device ensures that a minimum clamping force will be applied even if there is a drop in pressure. This acts on the closing force. The gripping force maintenance device can also be used to increase gripping force or for single actuated gripping.

Version with shock absorbers

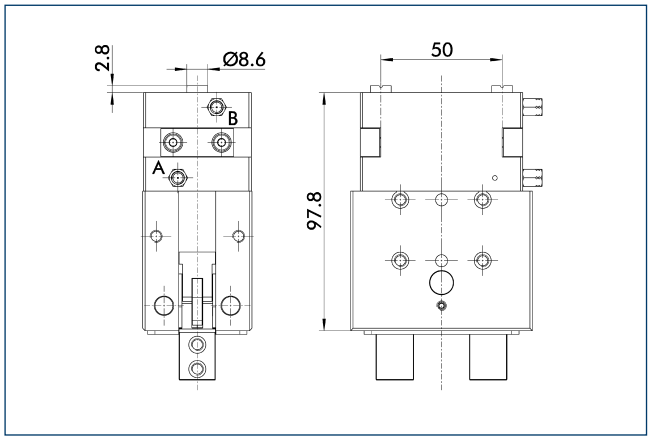

The opening movement of the fingers is braked with hydraulic shock absorbers in the shock-absorbing version. Quicker opening time can be achieved as a result.

MMS electronic magnetic switches

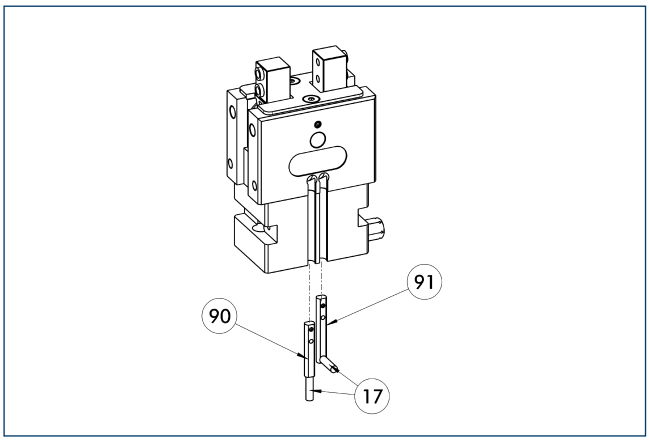

17 Cable outlet
91 MMS 22...-SA sensor
90 MMS 22... sensor

End position monitoring for mounting in the C-slot.

Description	ID	Often combined
MMS electronic magnetic switches		
MMS 22-S-M8-PNP	0301032	●
MMSK 22-S-PNP	0301034	
MMS electronic magnetic switches with lateral cable outlet		
MMS 22-S-M8-PNP-SA	0301042	●
MMSK 22-S-PNP-SA	0301044	
Cable extensions		
KV BW08-SG08 3P-0030-PNP	0301495	
KV BW08-SG08 3P-0100-PNP	0301496	
KV BW08-SG08 3P-0200-PNP	0301497	●
Clip for plug / socket		
CLI-M8	0301463	
Connection cables		
KA BG08-L 3P-0300-PNP	0301622	●
KA BG08-L 3P-0500-PNP	0301623	
KA BW08-L 3P-0300-PNP	0301594	
KA BW08-L 3P-0500-PNP	0301502	
Sensor distributor		
V2-M8	0301775	●
V4-M8	0301746	
V8-M8	0301751	

ⓘ Two sensors (closer/S) are required for each unit, plus extension cables as an option. Please note the minimum permitted bending radii for the sensor cables, which are generally 35 mm.

MMS PI1 programmable magnetic switches

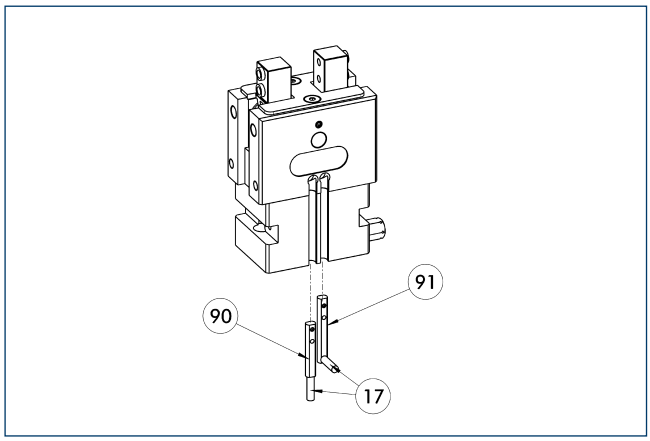

(17) Cable outlet
(91) MMS 22...-PI1-...-SA sensor
(90) MMS 22...-PI1-... sensor

Position query with one programmable position per sensor and electronics integrated in sensor. Programmable via MT magnet teaching tool (included in the scope of delivery) or ST plug teaching tool (optional). Limit position query mounted in C-groove. If the ST plug teaching tools are listed in the table, teaching can only take place with the ST plug teaching tools.

Description	ID	Often combined
MMS PI1 programmable magnetic switches		
MMS 22-PI1-S-M8-PNP	0301160	●
MMSK 22-PI1-S-PNP	0301162	
MMS PI1-HD programmable magnetic switches with stainless steel housing		
MMS 22-PI1-S-M8-PNP-HD	0301110	●
MMSK 22-PI1-S-PNP-HD	0301112	
MMS PI1 programmable magnetic switches with lateral cable outlet		
MMS 22-PI1-S-M8-PNP-SA	0301166	●
MMSK 22-PI1-S-PNP-SA	0301168	

ⓘ Two sensors (closer/S) are required for each unit, plus extension cables as an option. Please note the minimum permitted bending radii for the sensor cables, which are generally 35 mm. Connection cable, cable extensions, and sensor distributors can be found in the table for the MMS 22.

MMS PI2 programmable magnetic switches

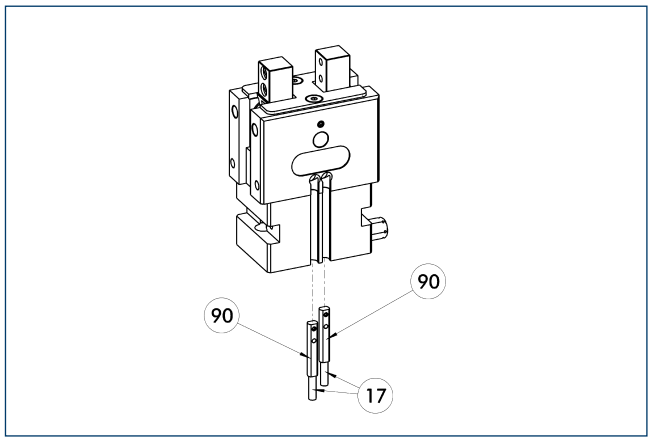

(17) Cable outlet
(90) MMS 22...-PI2-... sensor

Position query with two programmable positions per sensor and electronics integrated in sensor. Programmable via MT magnet teaching tool (included in the scope of delivery) or ST plug teaching tool (optional). Limit position query mounted in C-groove. If the ST plug teaching tools are listed in the table, teaching can only take place with the ST plug teaching tools.

Description	ID	Often combined
MMS PI2 programmable magnetic switches		
MMS 22-PI2-S-M8-PNP	0301180	●
MMSK 22-PI2-S-PNP	0301182	
MMS PI2-HD programmable magnetic switches with stainless steel housing		
MMS 22-PI2-S-M8-PNP-HD	0301130	●
MMSK 22-PI2-S-PNP-HD	0301132	

ⓘ Per unit one sensor (closer/S) is required, optionally a cable extension. Please note the minimum permitted bending radii for the sensor cables, which are generally 35 mm. Connection cable, cable extensions, and sensor distributors can be found in the table for the MMS-P 22.

MMS-P programmable magnetic switches

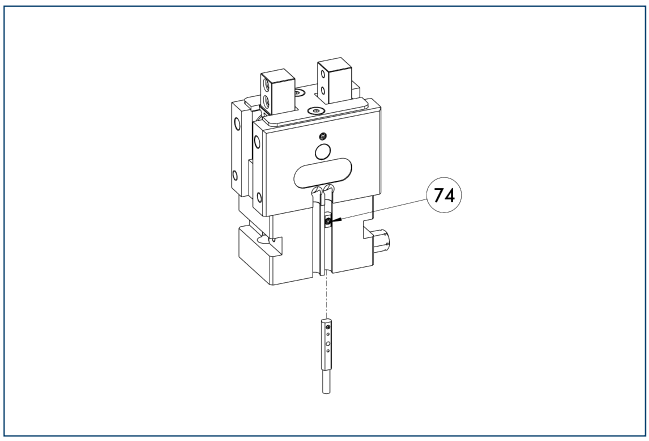

74 Stop for MMS-P

Position monitoring with two programmable positions per sensor. The end position monitoring is mounted in the C-slot.

Description	ID	Often combined
MMS-P programmable magnetic switches		
MMSK-P 22-S-PNP	0301371	
MMS-P 22-S-M8-PNP	0301370	●
Clip for plug / socket		
CLI-M8	0301463	
Connection cables		
KA BG08-L 4P-0500	0307767	●
KA BG08-L 4P-1000	0307768	
KA BW08-L 4P-0500	0307765	
KA BW08-L 4P-1000	0307766	
Sensor distributor		
V2-M8-4P-2XM8-3P	0301380	

ⓘ Per unit one sensor (closer/S) is required, optionally a cable extension. Please note the minimum permitted bending radii for the sensor cables, which are generally 35 mm.

Lightweight Gripper with Membrane Technology for High Dynamics.

Pneumatic Internal Hole Grippers

LOG Internal Hole Gripper

Series	Size	Page
LOG		1370
LOG	20–99	1374

Cost effective. Smooth. Reliable.

LOG Internal Hole Gripper

Light gripper made of very resistant polyamide with closed diaphragm system

Field of Application

Particularly suited to highly dynamic applications with a low workpiece weight, for handling small components and plastic parts, as well as for sand core handling

Advantages – Your benefit

Low weight allows for high dynamics in the application

Closed membrane system and internal back stop protect the expansion membrane against damage

Short delivery time for customized measurements

Long lifetime enable long-lasting economical use

Air supply via hose-free direct connection or screw connections for flexible pressure supply in all automated systems

Sizes	Weight	Gripping diameter	Workpiece weight
Quantity: 79	0.008 .. 0.44 kg	20 .. 99 mm	0.55 .. 12.83 kg

Functional Description

The membrane expands when pressure is applied, creating a synchronized movement of the gripping surfaces.

① **Air connection thread**

② **Mounting thread**

③ **Gripping surface**

④ **O-ring seal for hose-free air connection**

⑤ **Membrane**

⑥ **Internal stop / overload protection**

CAD data, operating manuals and other current product documents are available at **www.schunk.com**

General Notes about the Series

Operating principle: Membrane

Housing material: PA 12

Base jaw material: PA 12

Actuation: pneumatic, with filtered compressed air as per DIN ISO 8573-1: 7 4 4

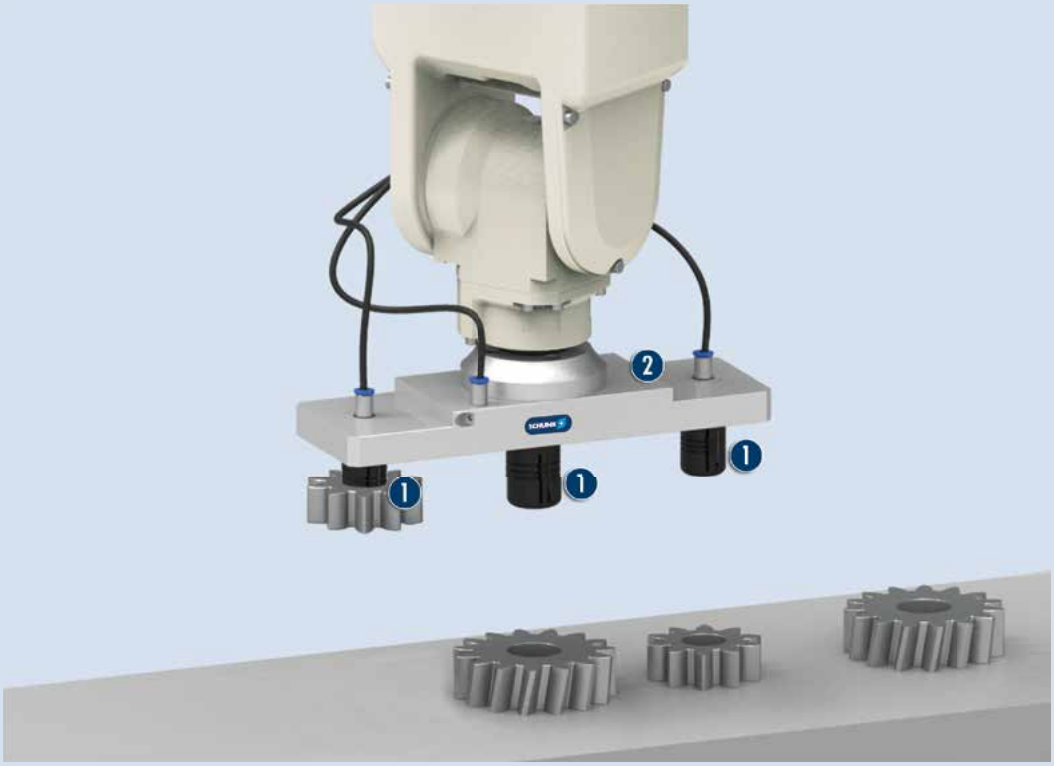

Application example

Handling of gears with different diameters

1 LOG Internal Hole Gripper

2 Customized adapter plate

SCHUNK offers more ...

The following components make the product LOG even more productive – the suitable addition for the highest functionality, flexibility, reliability, and controlled production.

SRU-plus Rotary Actuator

ERD Rotary Actuator

SWS Quick-change System

HWS Manual Changing System

SDV-P Pressure Maintenance Valve

AGE-F Compensation Unit

ELB Linear Module

LM Linear Module

Fittings

ⓘ Further information regarding the products can be found on the following product pages or at www.schunk.com. Please contact us for further information: SCHUNK technical hotline +49-7133-103-2696

Options and special Information

Additional sizes and special designs are available on request.

LOG 20–99

SCHUNK Grippers pneumatic | Internal Hole Gripper

Gripping force, I.D. gripping

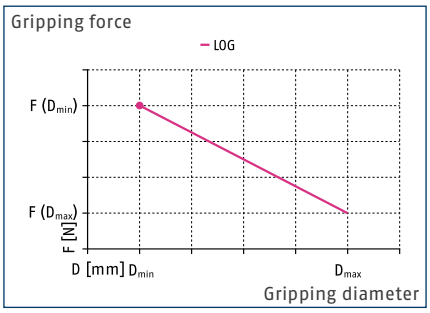

Creep properties

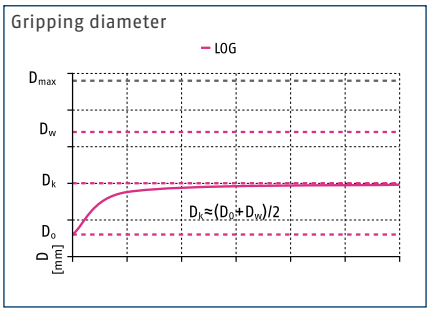

Forces and moments

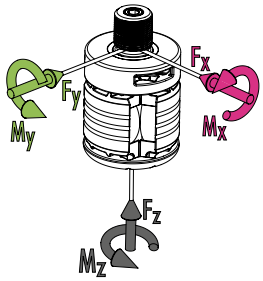

M_z max. 0.00 Nm

ⓘ The indicated moments and forces are statical values, apply for each base jaw and should not appear simultaneously. If the max. permitted finger weight is exceeded, it is impreative to throttle the air supply so that the jaw movement occurs without any hitting or bouncing. Service life may be reduced.

Technische Daten

Description		LOG 20,0-M14x1,5-M5	LOG 40,0-M16x1-M5	LOG 60,0-M16x1-M5	LOG 80,0-M20x1,5-G1/8	LOG 99,0-M20x1,5-G1/8
ID		0398920	0398940	0398960	0398980	0398999
Gripper Ø D +/-0.2	[mm]	19.8	39.6	59.4	79.2	98.01
Height H	[mm]	29	47	70.5	94	116.33
Fastening thread A		M14x1,5	M16x1	M16x1	M20x1,5	M20x1,5
Air connection thread B		M5	M5	M5	G1/8"	G1/8"
Workpiece-Ø D_{min}	[mm]	20	40	60	80	99
Workpiece-Ø D_{max}	[mm]	20.3	44.37	66.13	88.7	110.7
Opening force for Ø D_{min}	[N]	107.2	241.4	596.7	972.7	2516.7
Opening force for Ø D_{max}	[N]	27.3	66.7	190.5	433.3	1166.7
Weight	[kg]	0.008	0.034	0.108	0.238	0.44
Recommended workpiece weight	[kg]	0.55	1.23	3.04	4.96	12.83
Fluid consumption per double stroke	[cm³]	2.35	8.21	28.82	65.34	122.8
max. operating pressure	[bar]	6	6	6	6	6
Nominal operating pressure	[bar]	6	6	6	6	6
Closing- / opening time	[s]	0.05/0.05	0.08/0.08	0.14/0.14	0.22/0.22	0.44/0.44
min. / max. ambient temperature	[°C]	-40/80	-40/80	-40/80	-40/80	-40/80
Housing material		PA 12	PA 12	PA 12	PA 12	PA 12
IP class		27	27	27	27	27
Moments M_x max. / M_y max.	[Nm]	1.50/1.50	2.00/2.00	2.00/2.00	2.50/2.50	2.50/2.50
Forces F_x max. / F_y max. / F_z max.	[N]	150.00/150.00/150.00	200.00/200.00/200.00	200.00/200.00/200.00	250.00/250.00/250.00	250.00/250.00/250.00

ⓘ The gripping force can be directly adjusted with the operating pressure. With a pressure lower than the nominal operating pressure, the full travel is not reached.
The size graduation varies by 1 mm in each case.
For information about other sizes, visit www.schunk.com.

Main view

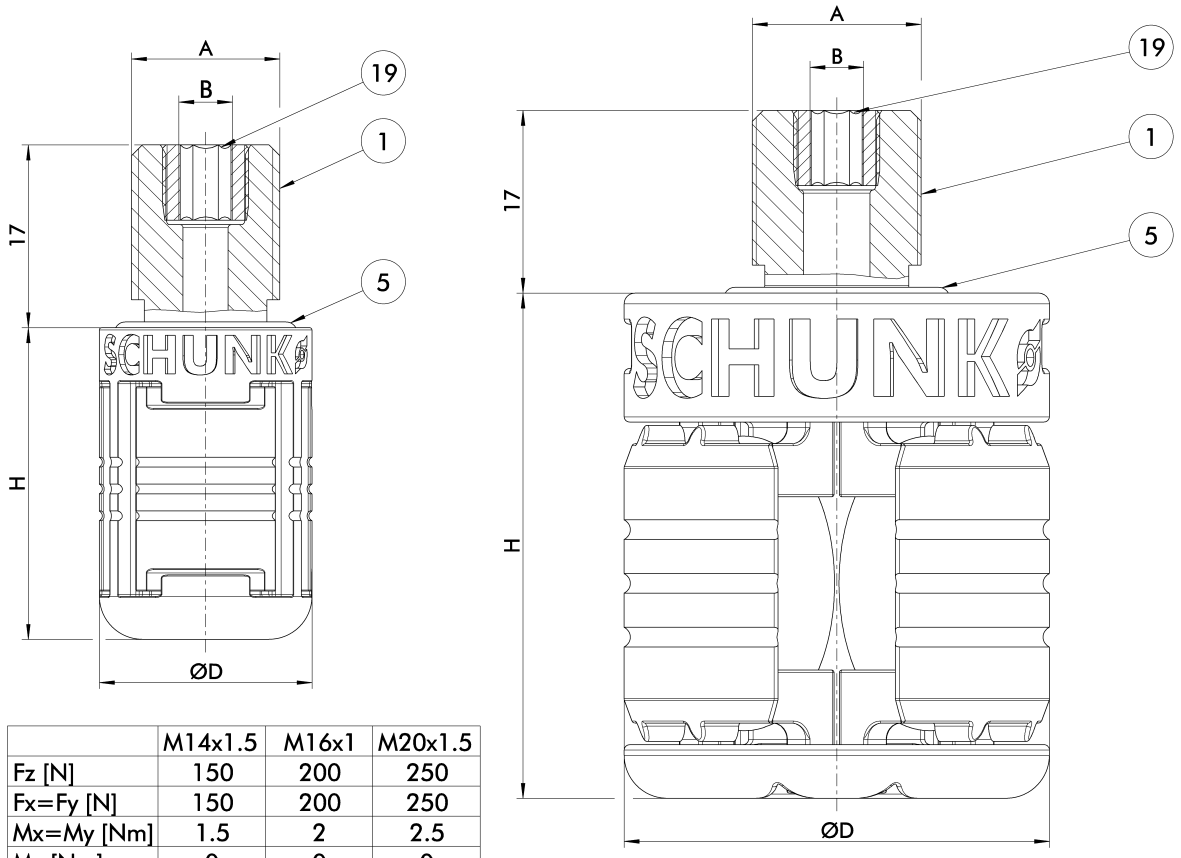

	M14x1.5	M16x1	M20x1.5
Fz [N]	150	200	250
Fx=Fy [N]	150	200	250
Mx=My [Nm]	1.5	2	2.5
Mz [Nm]	0	0	0

The drawing shows the gripper in the basic version with closed jaws, without dimensional consideration of the options described below.

ⓘ The dimensions A, B, D, and H can be found in the technical data table.

(1) Gripper connection
(5) O-ring
(19) Air connection

Hose-free direct connection M14x1.5

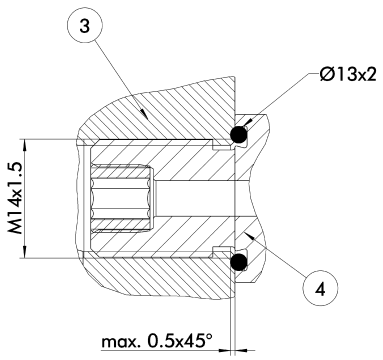

(3) Adapter
(4) Gripper

The direct connection is used for supplying compressed air without hoses. Instead, the pressure medium is fed through bore-holes in the mounting plate.

Hose-free direct connection M16x1

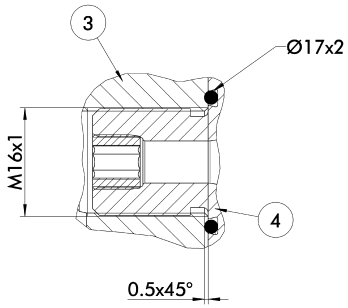

(3) Adapter
(4) Gripper

The direct connection is used for supplying compressed air without hoses. Instead, the pressure medium is fed through bore-holes in the mounting plate.

Hose-free direct connection M20x1.5

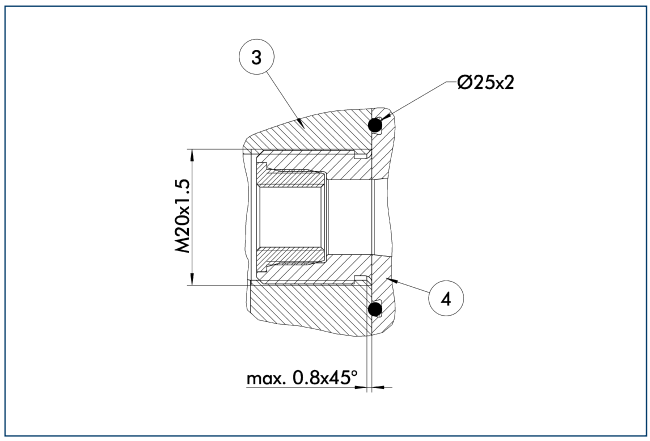

3 Adapter

4 Gripper

The direct connection is used for supplying compressed air without hoses. Instead, the pressure medium is fed through bore-holes in the mounting plate.

Connection possibilities

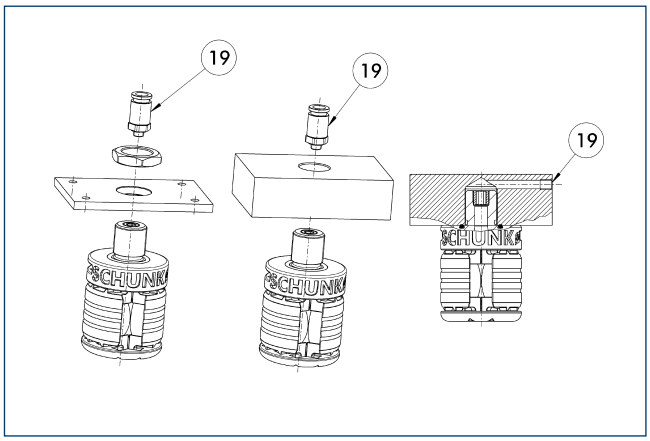

19 Air connection

The LOG can be simply screwed in through a through-bore with lock nut or directly into an adapter plate.

The world's most comprehensive Range of electric Standard Grippers on the Market.

2-Finger Parallel Grippers electric

EGP Small Components Gripper

Series	Sizes	Page
EGP		1382
EGP	25	1386
EGP	40	1392
EGP	50	1398

MEG Small Components Gripper

Series	Sizes	Page
MEG		1404
MEG	40	1408
MEG	50	1412
MEG	64	1416

EGN Universal Gripper

Series	Sizes	Page
EGN		1420
EGN	80	1424
EGN	100	1430
EGN	160	1436

EVG Universal Gripper

Series	Sizes	Page
EVG		1442
EVG	55-40	1446
EVG	55-100	1450

WSG Intelligent Gripper

Series	Sizes	Page
WSG		1454
WSG	25	1458
WSG	32	1460

Series	Sizes	Page
WSG	50	1464

PG Universal Gripper

Series	Sizes	Page
PG		1468
PG	70	1472

PEH Long-stroke Gripper

Series	Sizes	Page
PEH		1480
PEH	30	1484
PEH	40	1490

Series	Sizes	Page
PEH	50	1496

EGA Long-stroke Gripper

Series	Sizes	Page
EGA		1502
EGA	25	1506
EGA	40	1512

LEG Long-stroke Gripper

Series	Sizes	Page
LEG		1518
LEG	400	1522
LEG	520	1526
LEG	760	1530

High Performance Density. Fast. Compact.

EGP Small Components Gripper

Electric 2-finger parallel gripper with smooth-running base jaws guided on roller bearings

Field of Application

Gripping and moving of small to medium-sized workpieces with flexible force and high speed in clean environments, such as assembly, testing, laboratory and pharmaceutical industry

Advantages – Your benefit

Highest power density for the use of smaller grippers sizes

Digital actuation with binary signals for easy start-up and rapid integration in existing facilities

Two to four-step adjustable gripping force for simple adaption to sensitive workpieces

Pre-tensioned junction roller guide free from play for precise gripping with nearly constant force for all permissible finger lengths

Very high maximum cycles per minute for highest productivity

Compact dimensions for minimal interfering contours in the application

Through and through proven MPG-plus basis for equal gripping forces and strokes with identically high efficiency

Brushless DC servomotor for almost wear-free use and a long service life

Sizes	Weight	Gripping force	Stroke per jaw	Workpiece weight
Quantity: 3	0.11 .. 0.51 kg	40 .. 215 N	3 .. 8 mm	0.2 .. 1.05 kg

Functional Description

The brushless servomotor drives the base jaw via the gear mechanism.

The jaw stroke is synchronized by means of rack and pinion kinematics.

① **Base jaw**
for the connection of workpiece-specific gripper fingers

② **Cross roller guidance**
Precise gripping through base jaw guide with minimum play

③ **Gear**
Rack and pinion principle for centric gripping

④ **Drive**
Brushless DC servomotor

⑤ **Control electronics**
Integrated control and power electronics for decentralized actuation of the servomotor

CAD data, operating manuals and other current product documents are available at **www.schunk.com**

General Notes about the Series

Operating principle: Rack and pinion principle

Housing material: Aluminum alloy, coated

Base jaw material: Steel

Actuation: servo-electric, via brushless DC servomotor

Warranty: 24 months (details, general terms and conditions and operating manuals can be downloaded at www.schunk.com)

Scope of delivery: Enclosed pack with centering sleeve and centering pins, mount for proximity switch, assembly and operating manual with declaration of incorporation.

Gripping force: is the arithmetic total of the gripping force applied to each gripper jaw at distance P (see illustration).

Finger length: is measured from the upper edge of the gripper housing in the direction of the main axis. The breach of the max. permitted finger length can bring higher abrasion.

Repeat accuracy: is defined as the spread of the limit position after 100 consecutive strokes.

Workpiece weight: is calculated for a force-fit connection with a coefficient of friction of 0.1 and a safety factor of 2 against slippage of the workpiece on acceleration due to gravity g. Considerably heavier workpiece weights are permitted with form-fit gripping.

Closing and opening times: Minimum closing and opening times are only the movement times of the base jaws at max. speed, max. acceleration without electrical restrictions (maximum current) and observance of the maximum permissible mass per finger.

Nominal currents: may be permanently applied. The information in the respective product documentation must be observed for all current levels beyond the rated current up to the maximum current.

Application example

Electrically driven, dual-axis pick-and-place machine for small components

1. EGP electric 2-Finger Parallel Gripper
2. PPU-E Pick & Place Unit

SCHUNK offers more ...

The following components make the product EGP even more productive – the suitable addition for the highest functionality, flexibility, reliability, and controlled production.

Inductive Proximity Sensor

Flexible Position Sensor

OAS Optical Distance Sensor

KA Connection Cable

ERD Rotary Actuator

Plastic Inserts

ERS Rotary Actuator

ZHU Centering Sleeves

Finger Blanks

Adapter Plates

PPU-E Pick & Place Unit

ELM Linear Module with direct drive

ⓘ Further information regarding the products can be found on the following product pages or at www.schunk.com. Please contact us for further information: SCHUNK technical hotline +49-7133-103-2696

Options and special Information

Manually adjustable gripping force: With an integrated rotary switch, the gripping force can be adjusted in two stages for the EGP 25 100% and 50%, and in four stages for EGP 40 and 50 100%, 75%, 50%, and 25%.
Optional status monitoring via external sensor system: The status of the gripper can be monitored by external senors.
Optional adapter plates: Space-saving frontal mounting of the gripper is enabled by optional adapter plates.
Connection cable KA: Connection of the gripper to the voltage supply and superordinate control cables in various lengths with angled or straight sleeves can be ordered for the connection of the gripper to the voltage supply and superordinate control unit.

EGP 25

SCHUNK Grippers electric | 2-Finger Parallel Grippers | Small Components Gripper

Gripping force

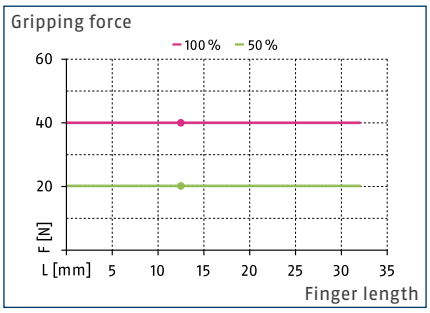

Finger load

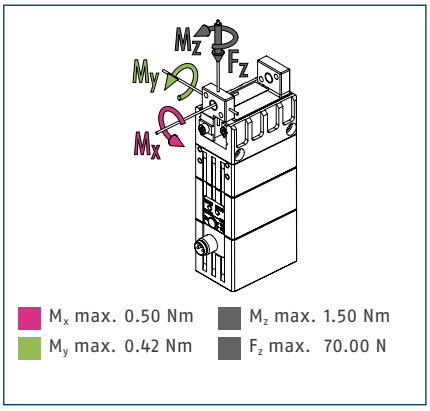

ⓘ The specified torques and forces are static values, apply for each base jaw, and may occur simultaneously.

Technical data

Description		EGP 25-N-N-B
ID		0310900
General operating data		
Stroke per jaw	[mm]	3
min. / max. gripping force	[N]	20/40
Recommended workpiece weight	[kg]	0.2
max. permitted finger length	[mm]	32
max. permitted weight per finger	[kg]	0.02
Repeat accuracy	[mm]	0.02
Closing- / opening time	[s]	0.09/0.09
Weight	[kg]	0.11
min. / max. ambient temperature	[°C]	5/55
IP class		30
Noise emission	[dB(A)]	< 70
Electrical operating data		
Controller electronics		integrated
Nominal voltage	[V DC]	24
Nominal current	[A]	0.14
max. power supply	[A]	1
Communication interface		Digital Inputs
Number of digital inputs/outputs		2/-

Main view

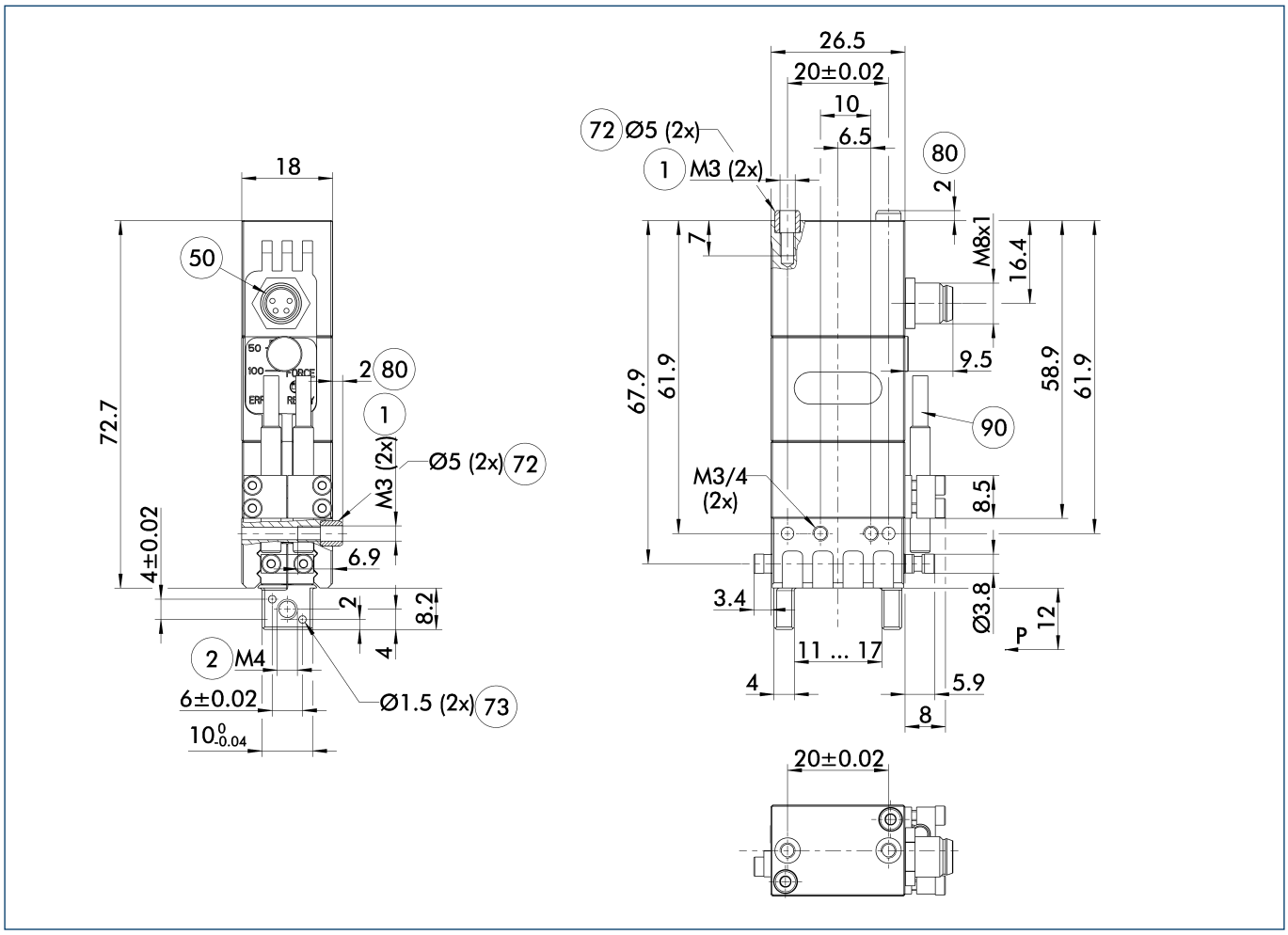

The drawing shows the basic version of the gripper with open jaws, without dimensional consideration of the options described below.

1. Gripper connection
2. Finger connection
50. Electrical connection
72. Fit for centering sleeves
73. Fit for centering pins
80. Depth of the centering sleeve hole in the mating part
90. IN ... sensor

Maximum permitted finger projection

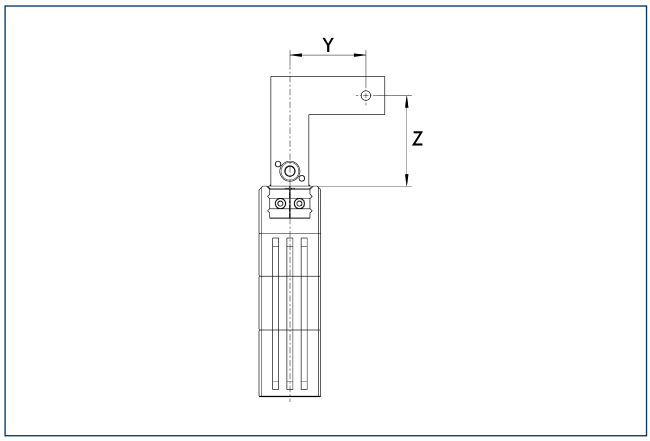

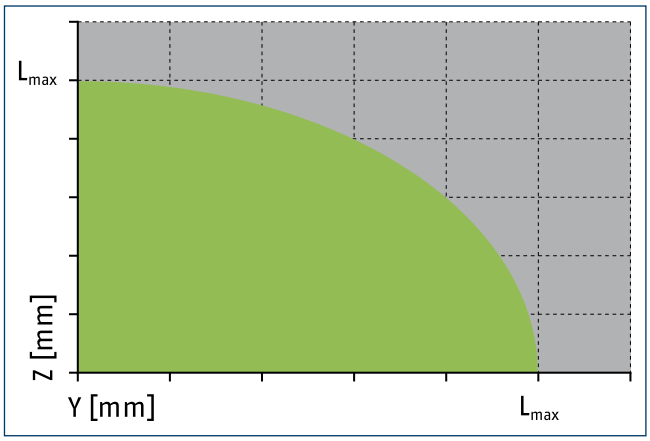

Permitted range

Inadmissible range

L_{max} is equivalent to the maximum permitted finger length, see the chart of technical specifications.

Jaw design

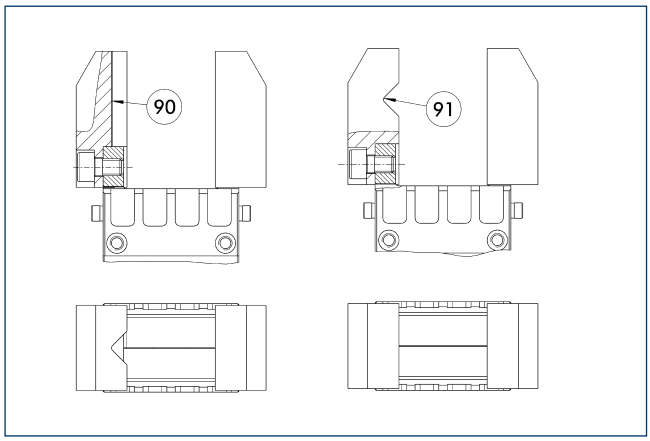

(90) Vertical prism (91) Horizontal prism

A three-point support of the gripped workpiece is beneficial for gripping the workpiece with repeat accuracy and process reliability. More than three support points lead to a redundancy of the system. The drawing shows two alternative recommendations for the jaw design for coaxial and radial gripping of a cylindrical part.

Adapter plate

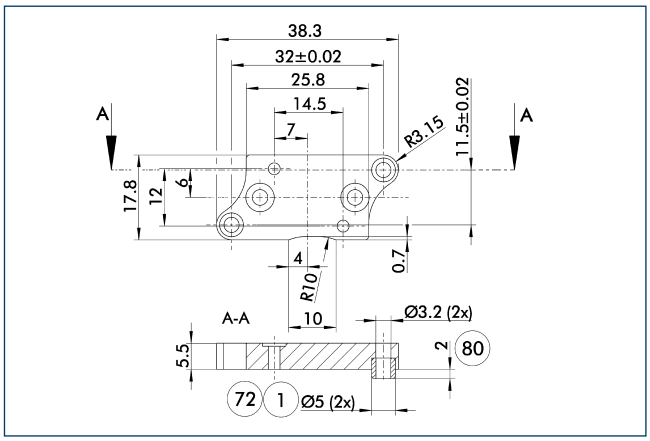

(1) Gripper connection
(72) Fit for centering sleeves
(80) Depth of the centering sleeve hole in the mating part

The adapter plate includes O-rings* for a hose-free direct connection, additional centering sleeves and screws for mounting the gripper.
*Only used with pneumatic actuators.

Description	ID	
Adapter plate		
APL-MPG-plus 25	0305507	

ⓘ The adapter plate is a separately ordered, optional accessory.

Adapter plate

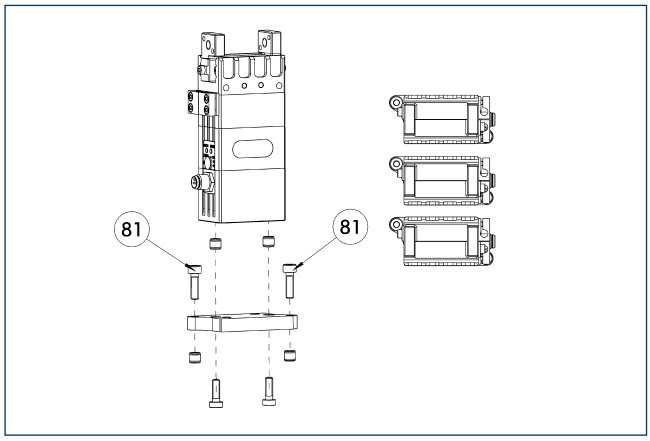

(81) Not included in the scope of delivery

The adapter plate includes O-rings* for a hose-free direct connection, additional centering sleeves and screws for mounting the gripper.
*Only used with pneumatic actuators.

Description	ID	
Adapter plate		
APL-MPG-plus 25	0305507	

ⓘ The adapter plate is a separately ordered, optional accessory.

ABR-MPG-plus 25 finger blanks

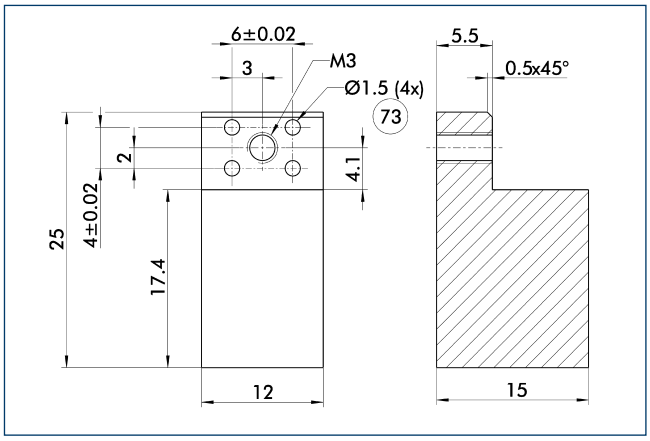

(73) Fit for centering pins

Finger blanks for customized subsequent machining.

Description	ID	Material	Scope of delivery
Finger blanks			
ABR-MPG-plus 25	0340211	Aluminum	2

OAS-MPG-plus 25 object distance sensor

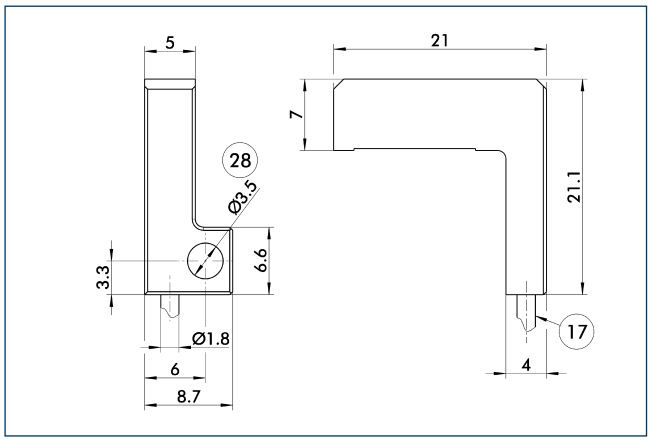

17 Cable outlet
28 Through-bore

Object distance sensor for detecting a workpiece and for measuring its distance to the gripper.

Description	ID	
Object distance sensor		
OAS-MPG-plus 25	0308891	

Object distance sensor

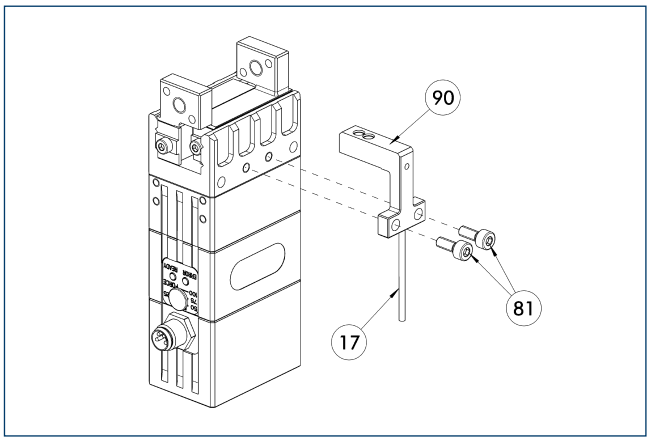

17 Cable outlet
81 Not included in the scope of delivery
90 OAS

Optical distance and presence sensor for direct mounting on the gripper. One OAS sensor per gripper can be assembled.

Description	ID	
Object distance sensor		
OAS-MPG-plus 25	0308891	
Electronic processor		
OAS-V09-D	0308865	
OAS-V10-A	0308867	
OAS-V10-D	0308866	

Modular assembly automation

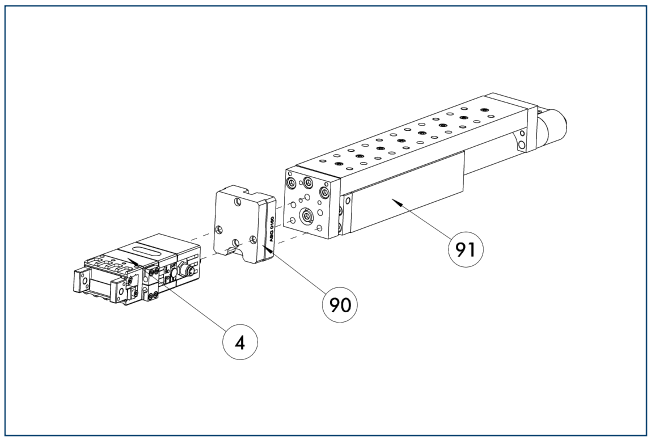

4 Gripper
90 ASG adapter plate
91 CLM / KLM / LM / ELM / ELS / HLM linear module

Gripper and linear modules can be combined with standard adapters out of the modular assembly system. For more information see our catalog "Modular Assembly Automation".

IN 40 inductive proximity switches

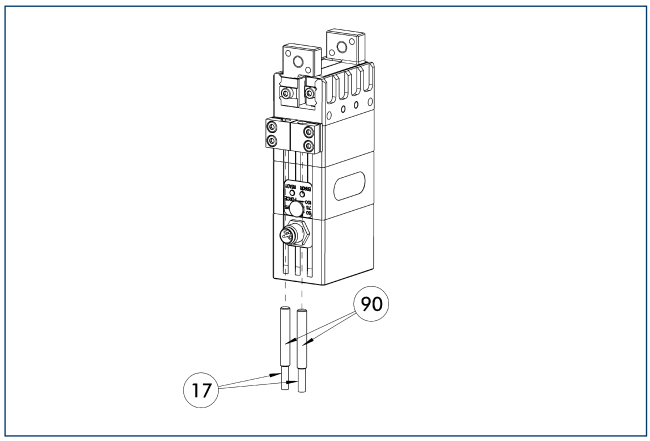

17 Cable outlet

90 Inductive proximity switches

Directly mounted limit position monitor.

Description	ID	Often combined
Inductive proximity switches		
IN 40-S-M12	0301574	
IN 40-S-M8	0301474	●
INK 40-S	0301555	
Cable extensions		
KV BG12-SG12 3P-0030-PNP	0301999	
KV BG12-SG12 3P-0060-PNP	0301998	
KV BW08-SG08 3P-0030-PNP	0301495	
KV BW08-SG08 3P-0100-PNP	0301496	
KV BW08-SG08 3P-0200-PNP	0301497	●
KV BW12-SG12 3P-0030-PNP	0301595	
KV BW12-SG12 3P-0100-PNP	0301596	
KV BW12-SG12 3P-0200-PNP	0301597	
Clip for plug / socket		
CLI-M12	0301464	
CLI-M8	0301463	
Connection cables		
KA BG08-L 3P-0300-PNP	0301622	●
KA BG08-L 3P-0500-PNP	0301623	
KA BG12-L 3P-0500-PNP	30016369	
KA BW08-L 3P-0300-PNP	0301594	
KA BW08-L 3P-0500-PNP	0301502	
KA BW12-L 3P-0300-PNP	0301503	
KA BW12-L 3P-0500-PNP	0301507	
Sensor distributor		
V2-M8	0301775	●
V2-M12	0301776	●
V4-M12	0301747	
V4-M8	0301746	
V8-M12	0301752	
V8-M8	0301751	

ⓘ Two sensors (closer/S) are required for each unit, plus extension cables as an option. Please note the minimum permitted bending radii for the sensor cables, which are generally 35 mm.

Cable connector / cable extension

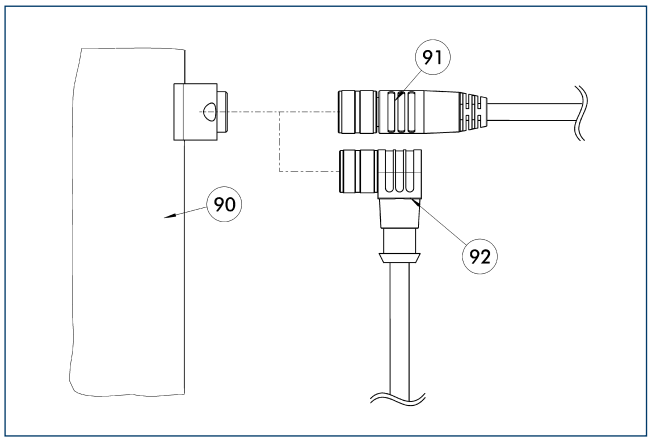

90 Connecting point for component

91 Cable with straight connection

92 Cable with angular connection

Description	ID	Length [m]	Connection electric cabinet sided	Often combined
Connection cables				
KA BG08-L 4P-0500	0307767	5	open wires	●
KA BG08-L 4P-1000	0307768	10	open wires	
KA BW08-L 4P-0500	0307765	5	open wires	
KA BW08-L 4P-1000	0307766	10	open wires	

ⓘ BG stands for a connection cable with a straight female connector and BW for an angled female connector.

EGP 40

SCHUNK Grippers electric | 2-Finger Parallel Grippers | Small Components Gripper

Gripping force

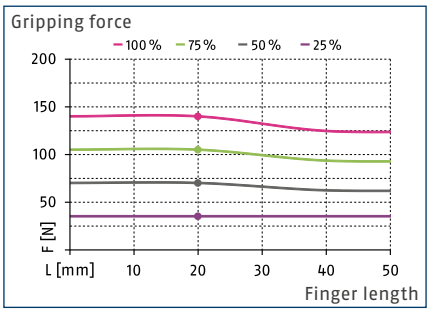

Finger load

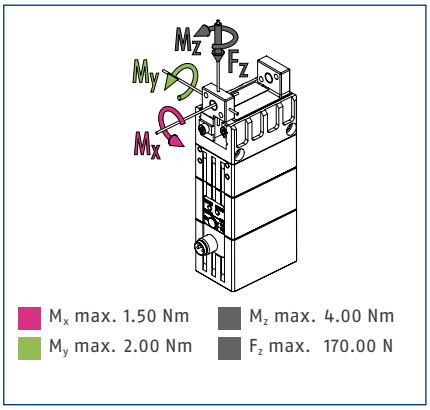

ⓘ The specified torques and forces are static values, apply for each base jaw, and may occur simultaneously.

Technical data

Description		EGP 40-N-N-B
ID		0310940
General operating data		
Stroke per jaw	[mm]	6
min. / max. gripping force	[N]	35/140
Recommended workpiece weight	[kg]	0.7
max. permitted finger length	[mm]	50
max. permitted weight per finger	[kg]	0.08
Repeat accuracy	[mm]	0.02
Closing- / opening time	[s]	0.2/0.2
Weight	[kg]	0.32
min. / max. ambient temperature	[°C]	5/55
IP class		30
Noise emission	[dB(A)]	< 70
Electrical operating data		
Controller electronics		integrated
Nominal voltage	[V DC]	24
Nominal current	[A]	0.2
max. power supply	[A]	2
Communication interface		Digital Inputs
Number of digital inputs/outputs		2/-

Main view

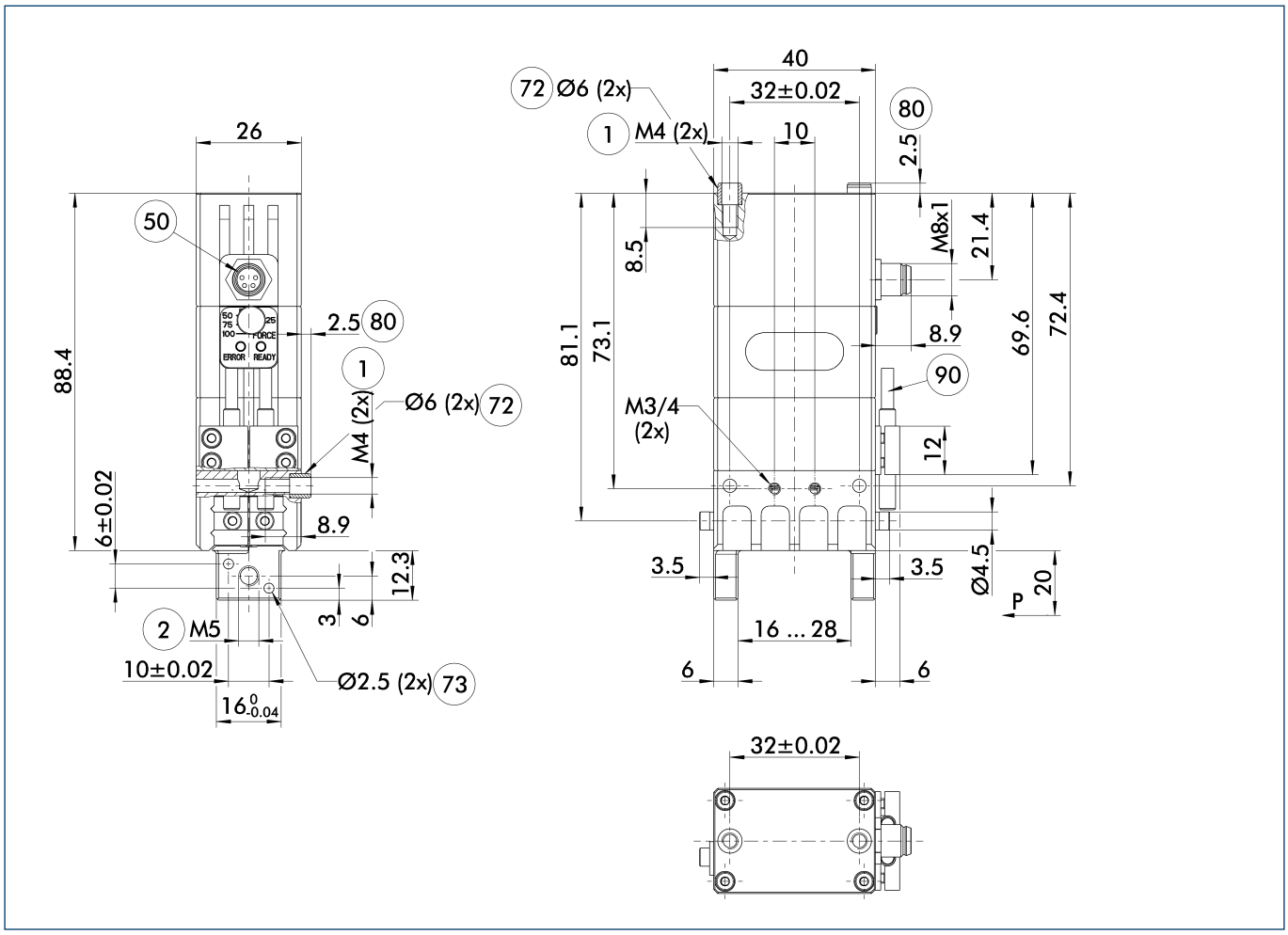

The drawing shows the basic version of the gripper with open jaws, without dimensional consideration of the options described below.

1. Gripper connection
2. Finger connection
50. Electrical connection
72. Fit for centering sleeves
73. Fit for centering pins
80. Depth of the centering sleeve hole in the mating part
90. IN ... sensor

Maximum permitted finger projection

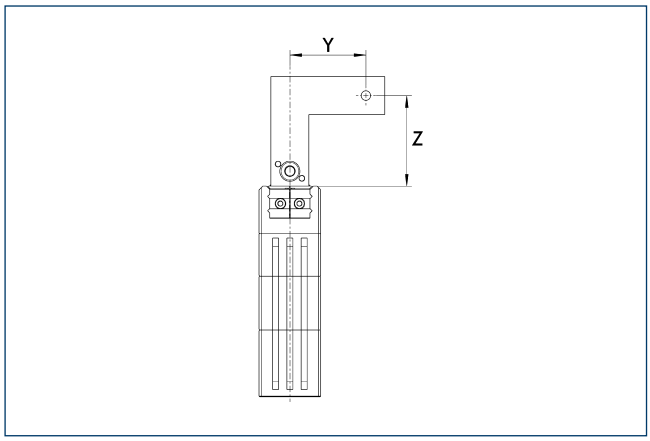

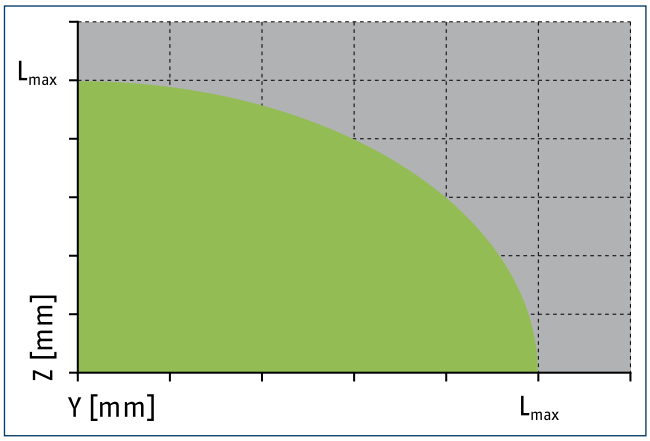

Permitted range

Inadmissible range

L_{max} is equivalent to the maximum permitted finger length, see the chart of technical specifications.

Jaw design

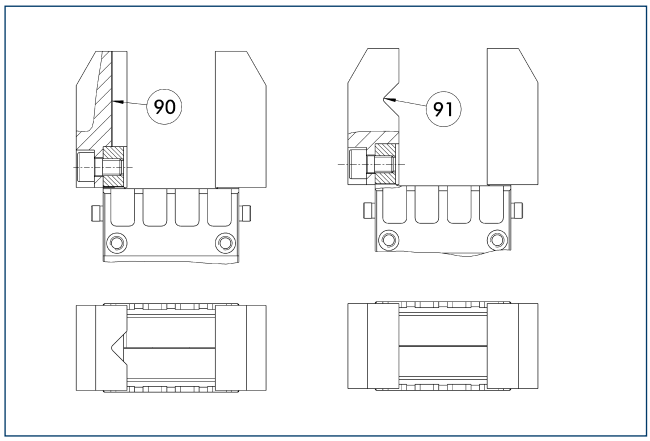

(90) Vertical prism (91) Horizontal prism

A three-point support of the gripped workpiece is beneficial for gripping the workpiece with repeat accuracy and process reliability. More than three support points lead to a redundancy of the system. The drawing shows two alternative recommendations for the jaw design for coaxial and radial gripping of a cylindrical part.

Adapter plate

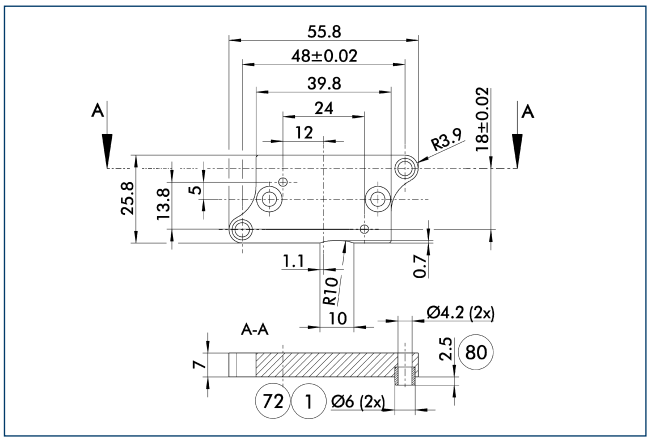

(1) Gripper connection
(72) Fit for centering sleeves
(80) Depth of the centering sleeve hole in the mating part

The adapter plate includes O-rings* for a hose-free direct connection, additional centering sleeves and screws for mounting the gripper.
*Only used with pneumatic actuators.

Description	ID	
Adapter plate		
APL-MPG-plus 40	0305527	

ⓘ The adapter plate is a separately ordered, optional accessory.

Adapter plate

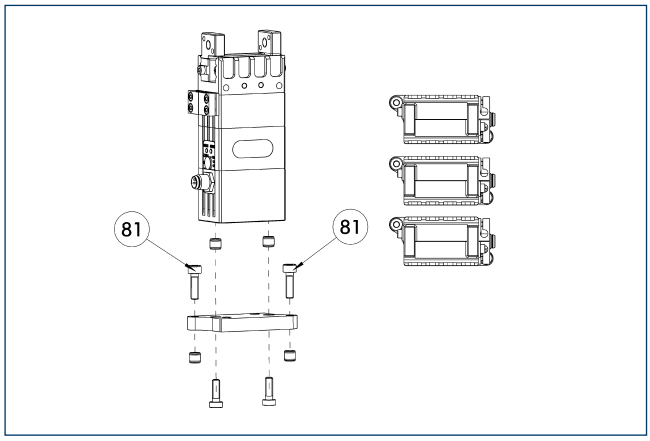

(81) Not included in the scope of delivery

The adapter plate includes O-rings* for a hose-free direct connection, additional centering sleeves and screws for mounting the gripper.
*Only used with pneumatic actuators.

Description	ID	
Adapter plate		
APL-MPG-plus 40	0305527	

ⓘ The adapter plate is a separately ordered, optional accessory.

ABR-MPG-plus 40 finger blanks

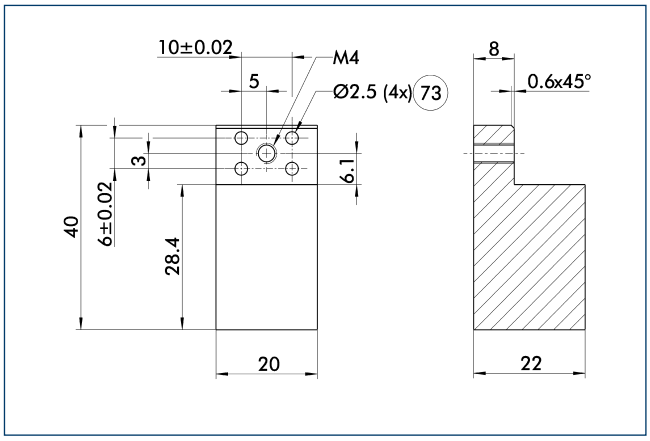

(73) Fit for centering pins

Finger blanks for customized subsequent machining.

Description	ID	Material	Scope of delivery
Finger blanks			
ABR-MPG-plus 40	0340213	Aluminum	2

OAS-MPG-plus 40 object distance sensor

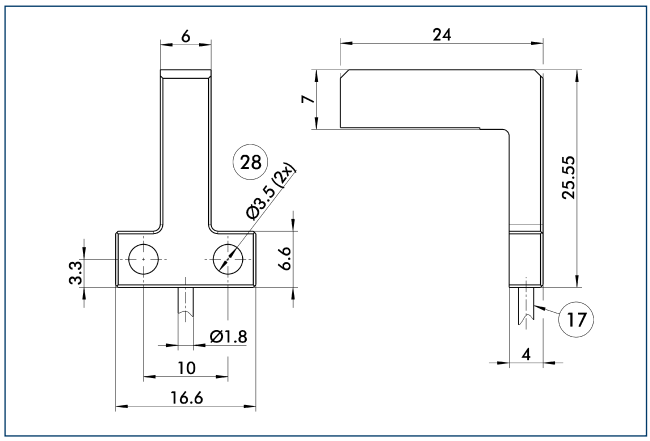

(17) Cable outlet
(28) Through-bore

Object distance sensor for detecting a workpiece and for measuring its distance to the gripper.

Description	ID	
Object distance sensor		
OAS-MPG-plus 40	0308893	

Object distance sensor

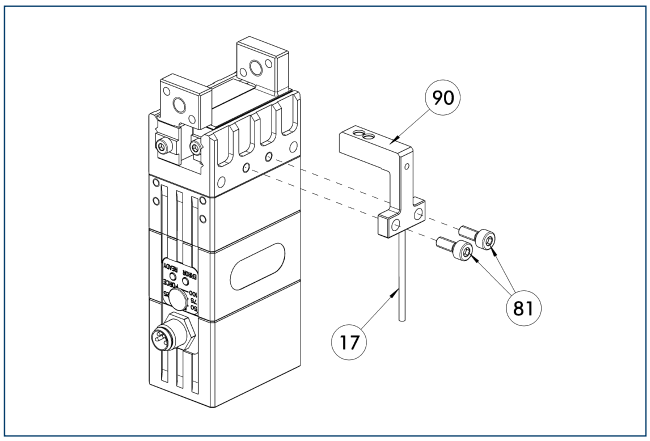

(17) Cable outlet
(81) Not included in the scope of delivery
(90) OAS

Optical distance and presence sensor for direct mounting on the gripper. One OAS sensor per gripper can be assembled.

Description	ID	
Object distance sensor		
OAS-MPG-plus 40	0308893	
Electronic processor		
OAS-V09-D	0308865	
OAS-V10-A	0308867	
OAS-V10-D	0308866	

Modular assembly automation

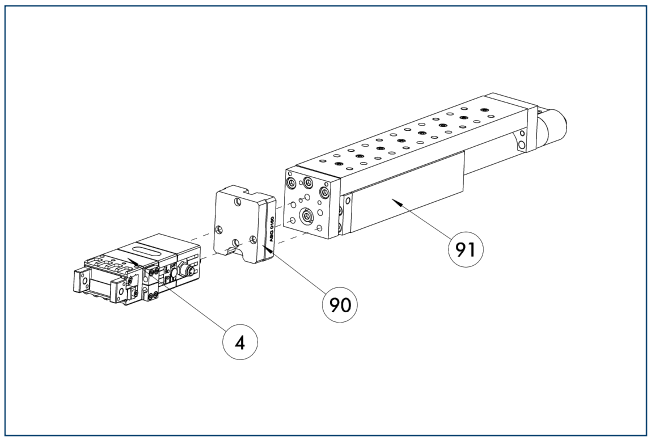

(4) Gripper
(90) ASG adapter plate
(91) CLM / KLM / LM / ELM / ELS / HLM linear module

Gripper and linear modules can be combined with standard adapters out of the modular assembly system. For more information see our catalog "Modular Assembly Automation".

IN 40 inductive proximity switches

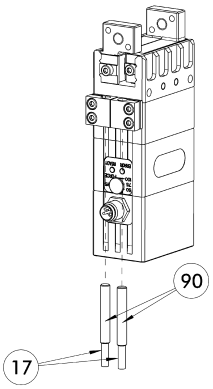

(17) Cable outlet (90) Inductive proximity switches

Directly mounted limit position monitor.

Description	ID	Often combined
Inductive proximity switches		
IN 40-S-M12	0301574	
IN 40-S-M8	0301474	●
INK 40-S	0301555	
Cable extensions		
KV BG12-SG12 3P-0030-PNP	0301999	
KV BG12-SG12 3P-0060-PNP	0301998	
KV BW08-SG08 3P-0030-PNP	0301495	
KV BW08-SG08 3P-0100-PNP	0301496	
KV BW08-SG08 3P-0200-PNP	0301497	●
KV BW12-SG12 3P-0030-PNP	0301595	
KV BW12-SG12 3P-0100-PNP	0301596	
KV BW12-SG12 3P-0200-PNP	0301597	
Clip for plug / socket		
CLI-M12	0301464	
CLI-M8	0301463	
Connection cables		
KA BG08-L 3P-0300-PNP	0301622	●
KA BG08-L 3P-0500-PNP	0301623	
KA BG12-L 3P-0500-PNP	30016369	
KA BW08-L 3P-0300-PNP	0301594	
KA BW08-L 3P-0500-PNP	0301502	
KA BW12-L 3P-0300-PNP	0301503	
KA BW12-L 3P-0500-PNP	0301507	
Sensor distributor		
V2-M8	0301775	●
V2-M12	0301776	●
V4-M12	0301747	
V4-M8	0301746	
V8-M12	0301752	
V8-M8	0301751	

ⓘ Two sensors (closer/S) are required for each unit, plus extension cables as an option. Please note the minimum permitted bending radii for the sensor cables, which are generally 35 mm.

Mounting kit for FPS

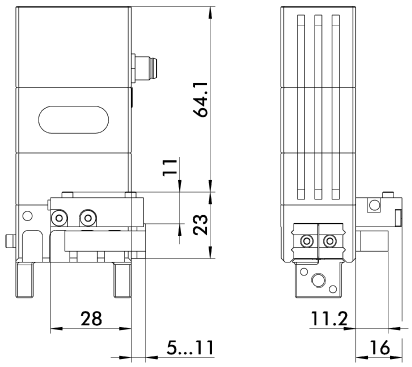

The following FPS position sensor can differentiate between five programmable areas and/or switching points for the stroke of a gripper, and can be used in combination with a PC as a measuring system.

Description	ID	
Mounting kit for FPS		
AS-FPS-MPG-plus 40	0301762	

ⓘ This mounting kit needs to be ordered optionally as an accessory.

Flexible position sensor

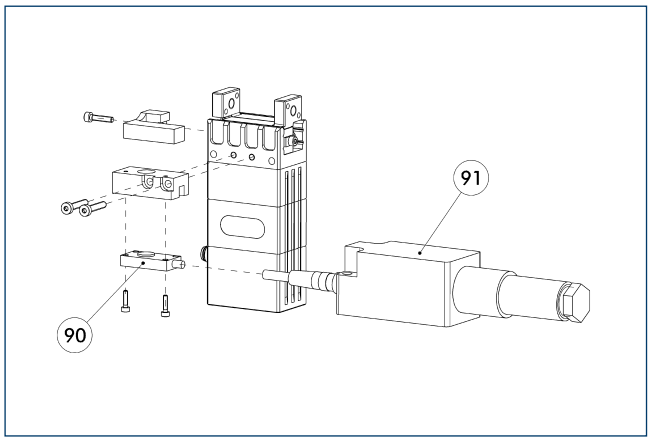

90 FPS-S sensor

91 FPS-F5 / -F5 T electronic processor

Flexible position monitoring of up to five positions.

Description	ID	Often combined
Mounting kit for FPS		
AS-FPS-MPG-plus 40	0301762	
Sensor		
FPS-S 13	0301705	
Electronic processor		
FPS-F5	0301805	●
FPS-F5 T	0301807	

ⓘ When using a FPS system, a FPS sensor (FPS-S) and a control unit (FPS-F5 / F5 T) are required for each gripper as well as a mounting kit (AS), if listed. Cable extensions (KV) are available as options in the "Accessories" catalog section.

Cable connector / cable extension

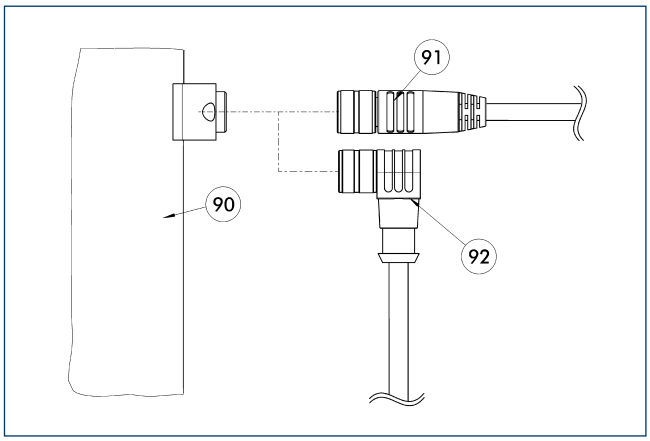

90 Connecting point for component

91 Cable with straight connection

92 Cable with angular connection

Description	ID	Length [m]	Connection electric cabinet sided	Often combined
Connection cables				
KA BG08-L 4P-0500	0307767	5	open wires	●
KA BG08-L 4P-1000	0307768	10	open wires	
KA BW08-L 4P-0500	0307765	5	open wires	
KA BW08-L 4P-1000	0307766	10	open wires	

ⓘ BG stands for a connection cable with a straight female connector and BW for an angled female connector.

EGP 50

SCHUNK Grippers electric | 2-Finger Parallel Grippers | Small Components Gripper

Gripping force

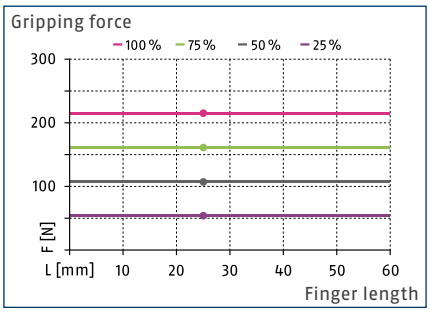

Finger load

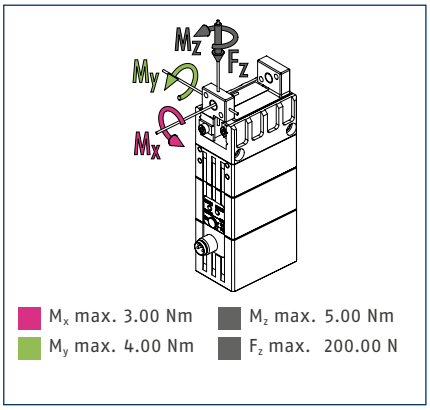

ⓘ The specified torques and forces are static values, apply for each base jaw, and may occur simultaneously.

Technical data

Description		EGP 50-N-N-B
ID		0310960
General operating data		
Stroke per jaw	[mm]	8
min. / max. gripping force	[N]	54/215
Recommended workpiece weight	[kg]	1.05
max. permitted finger length	[mm]	64
max. permitted weight per finger	[kg]	0.14
Repeat accuracy	[mm]	0.02
Closing- / opening time	[s]	0.21/0.21
Weight	[kg]	0.51
min. / max. ambient temperature	[°C]	5/55
IP class		30
Noise emission	[dB(A)]	< 70
Electrical operating data		
Controller electronics		integrated
Nominal voltage	[V DC]	24
Nominal current	[A]	0.3
max. power supply	[A]	2
Communication interface		Digital Inputs
Number of digital inputs/outputs		2/-

Main view

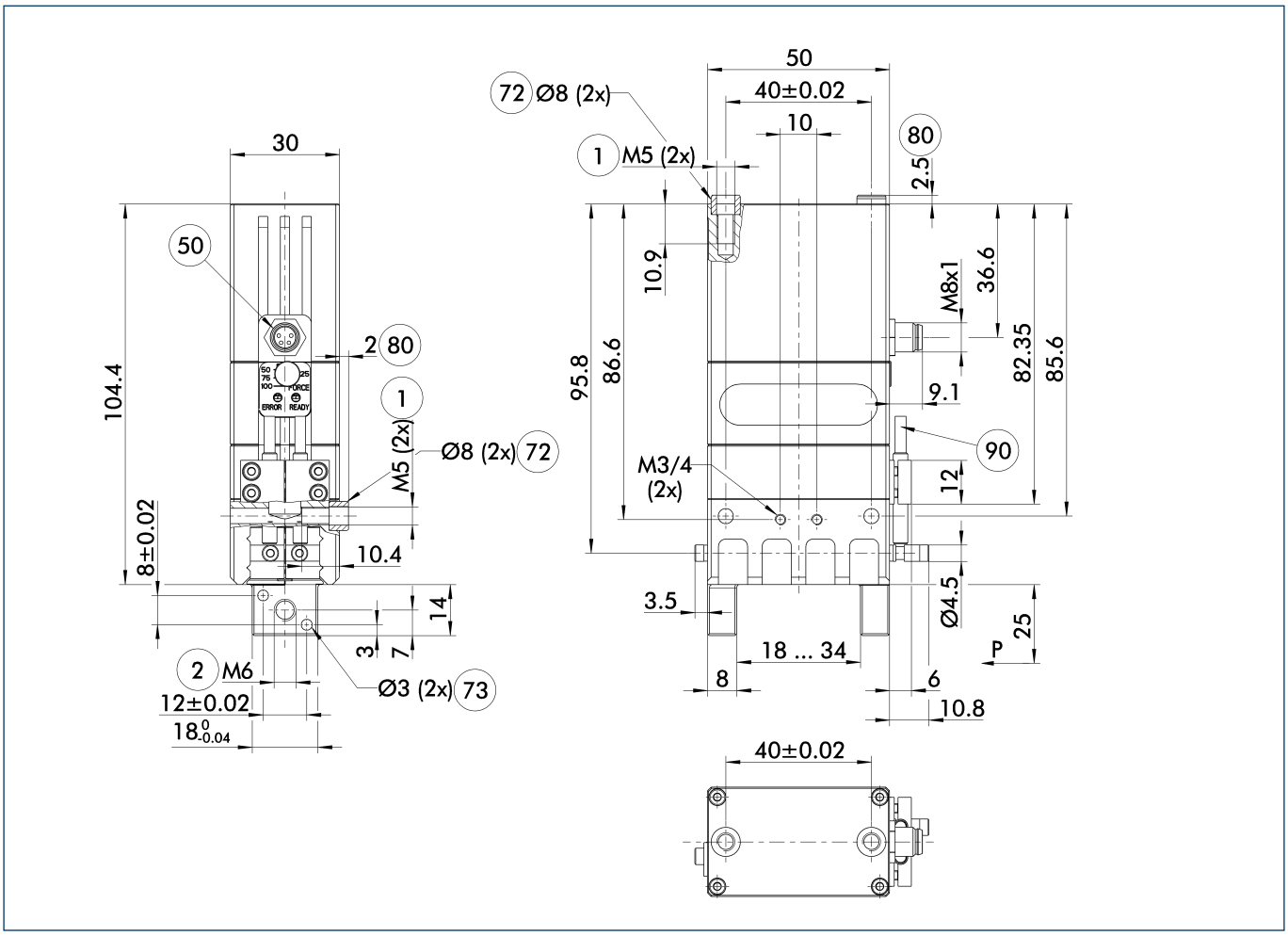

The drawing shows the basic version of the gripper with open jaws, without dimensional consideration of the options described below.

1. Gripper connection
2. Finger connection
50. Electrical connection
72. Fit for centering sleeves
73. Fit for centering pins
80. Depth of the centering sleeve hole in the mating part
90. IN ... sensor

Maximum permitted finger projection

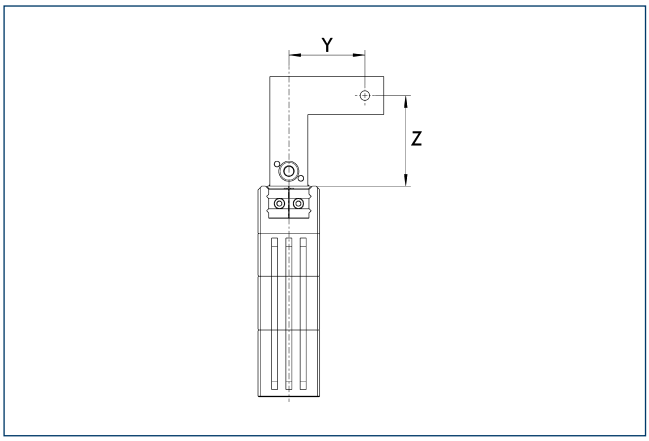

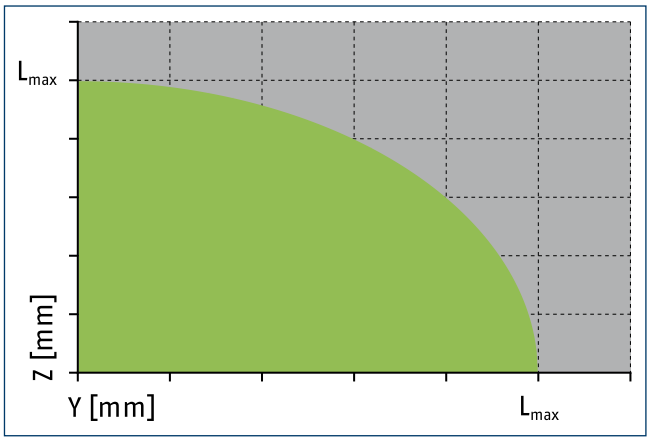

Permitted range

Inadmissible range

L_{max} is equivalent to the maximum permitted finger length, see the chart of technical specifications.

Jaw design

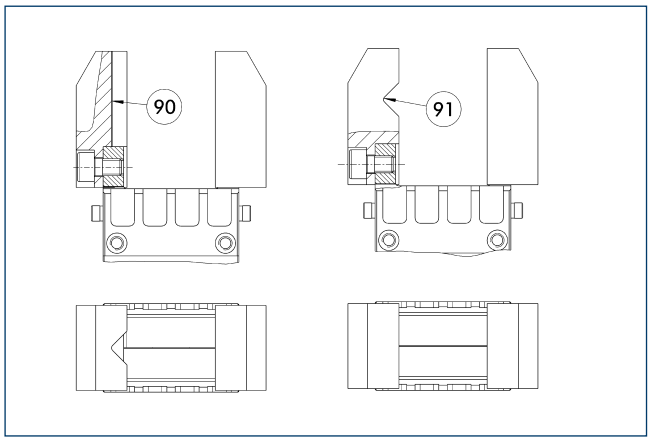

(90) Vertical prism (91) Horizontal prism

A three-point support of the gripped workpiece is beneficial for gripping the workpiece with repeat accuracy and process reliability. More than three support points lead to a redundancy of the system. The drawing shows two alternative recommendations for the jaw design for coaxial and radial gripping of a cylindrical part.

Adapter plate

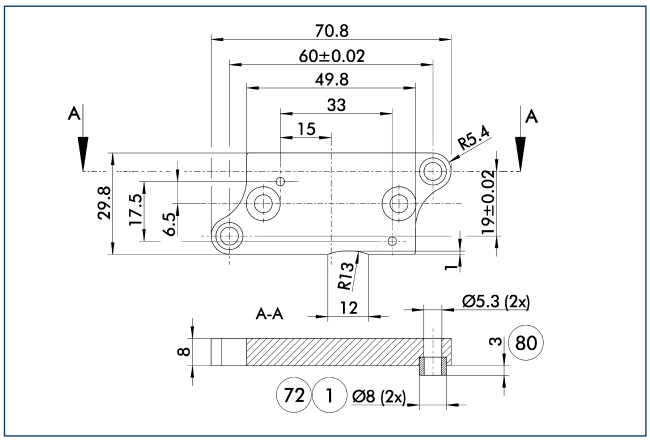

(1) Gripper connection
(72) Fit for centering sleeves
(80) Depth of the centering sleeve hole in the mating part

The adapter plate includes O-rings* for a hose-free direct connection, additional centering sleeves and screws for mounting the gripper.
*Only used with pneumatic actuators.

Description	ID	
Adapter plate		
APL-MPG-plus 50	0305537	

ⓘ The adapter plate is a separately ordered, optional accessory.

Adapter plate

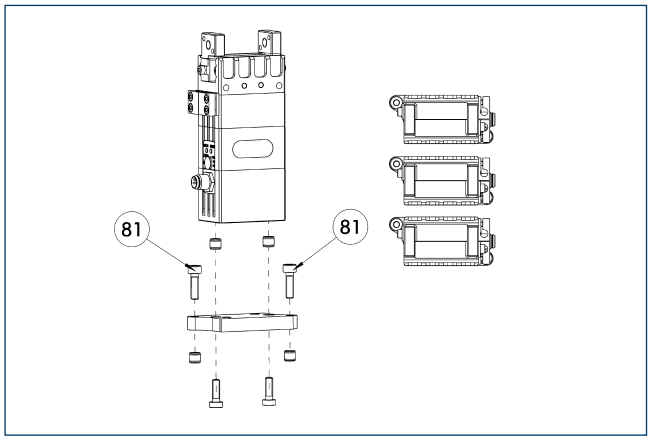

(81) Not included in the scope of delivery

The adapter plate includes O-rings* for a hose-free direct connection, additional centering sleeves and screws for mounting the gripper.
*Only used with pneumatic actuators.

Description	ID	
Adapter plate		
APL-MPG-plus 50	0305537	

ⓘ The adapter plate is a separately ordered, optional accessory.

ABR-MPG-plus 50 finger blanks

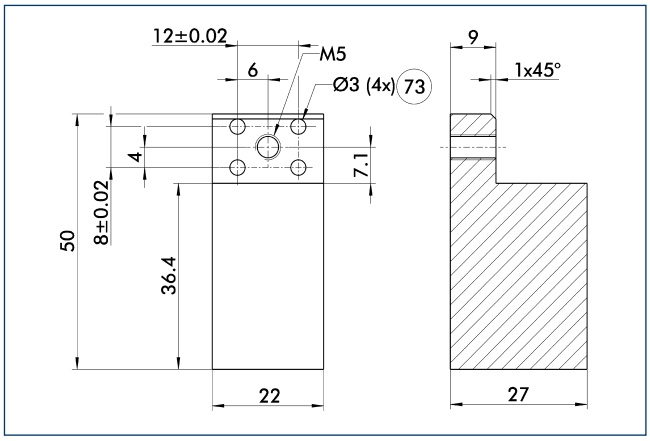

(73) Fit for centering pins

Finger blanks for customized subsequent machining.

Description	ID	Material	Scope of delivery
Finger blanks			
ABR-MPG-plus 50	0340214	Aluminum	2

OAS-MPG-plus 50 object distance sensor

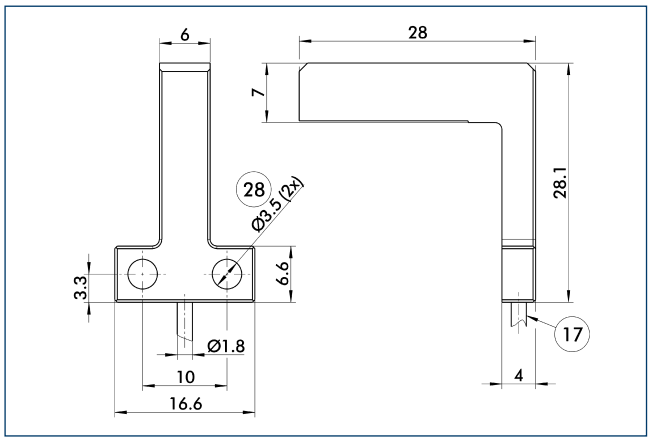

(17) Cable outlet
(28) Through-bore

Object distance sensor for detecting a workpiece and for measuring its distance to the gripper.

Description	ID	
Object distance sensor		
OAS-MPG-plus 50	0308894	

Object distance sensor

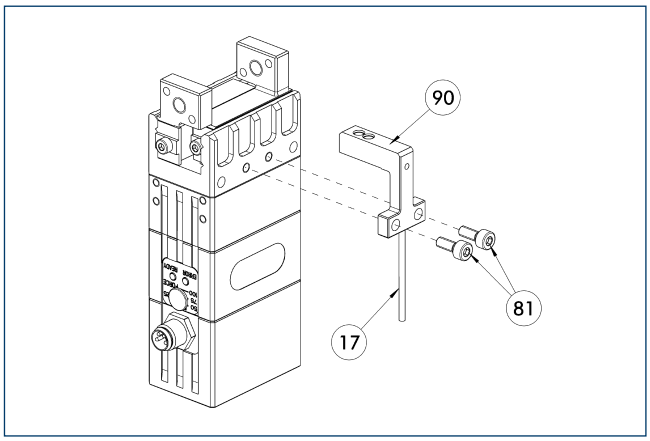

(17) Cable outlet
(81) Not included in the scope of delivery
(90) OAS

Optical distance and presence sensor for direct mounting on the gripper. One OAS sensor per gripper can be assembled.

Description	ID	
Object distance sensor		
OAS-MPG-plus 50	0308894	
Electronic processor		
OAS-V09-D	0308865	
OAS-V10-A	0308867	
OAS-V10-D	0308866	

Modular assembly automation

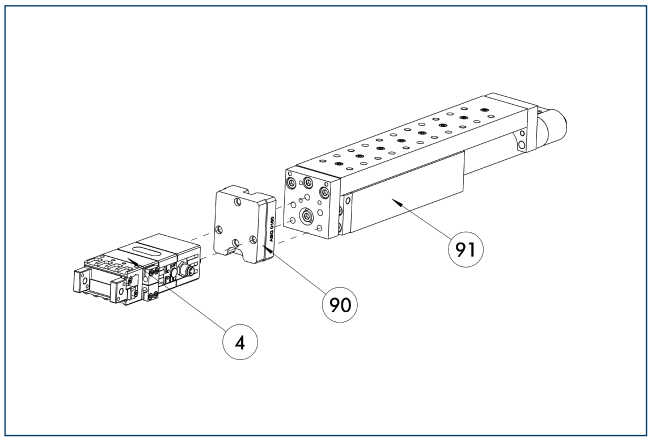

(4) Gripper
(90) ASG adapter plate
(91) CLM / KLM / LM / ELM / ELS / HLM linear module

Gripper and linear modules can be combined with standard adapters out of the modular assembly system. For more information see our catalog "Modular Assembly Automation".

IN 40 inductive proximity switches

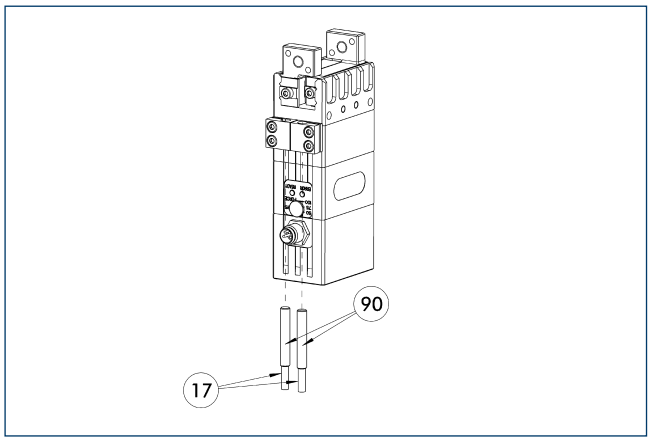

(17) Cable outlet (90) Inductive proximity switches

Directly mounted limit position monitor.

Description	ID	Often combined
Inductive proximity switches		
IN 40-S-M12	0301574	
IN 40-S-M8	0301474	●
INK 40-S	0301555	
Cable extensions		
KV BG12-SG12 3P-0030-PNP	0301999	
KV BG12-SG12 3P-0060-PNP	0301998	
KV BW08-SG08 3P-0030-PNP	0301495	
KV BW08-SG08 3P-0100-PNP	0301496	
KV BW08-SG08 3P-0200-PNP	0301497	●
KV BW12-SG12 3P-0030-PNP	0301595	
KV BW12-SG12 3P-0100-PNP	0301596	
KV BW12-SG12 3P-0200-PNP	0301597	
Clip for plug / socket		
CLI-M12	0301464	
CLI-M8	0301463	
Connection cables		
KA BG08-L 3P-0300-PNP	0301622	●
KA BG08-L 3P-0500-PNP	0301623	
KA BG12-L 3P-0500-PNP	30016369	
KA BW08-L 3P-0300-PNP	0301594	
KA BW08-L 3P-0500-PNP	0301502	
KA BW12-L 3P-0300-PNP	0301503	
KA BW12-L 3P-0500-PNP	0301507	
Sensor distributor		
V2-M8	0301775	●
V2-M12	0301776	●
V4-M12	0301747	
V4-M8	0301746	
V8-M12	0301752	
V8-M8	0301751	

ⓘ Two sensors (closer/S) are required for each unit, plus extension cables as an option. Please note the minimum permitted bending radii for the sensor cables, which are generally 35 mm.

Mounting kit for FPS

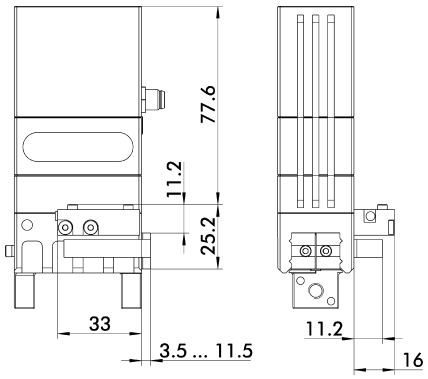

The following FPS position sensor can differentiate between five programmable areas and/or switching points for the stroke of a gripper, and can be used in combination with a PC as a measuring system.

Description	ID	
Mounting kit for FPS		
AS-FPS-MPG-plus 50	0301763	

ⓘ This mounting kit needs to be ordered optionally as an accessory.

Flexible position sensor

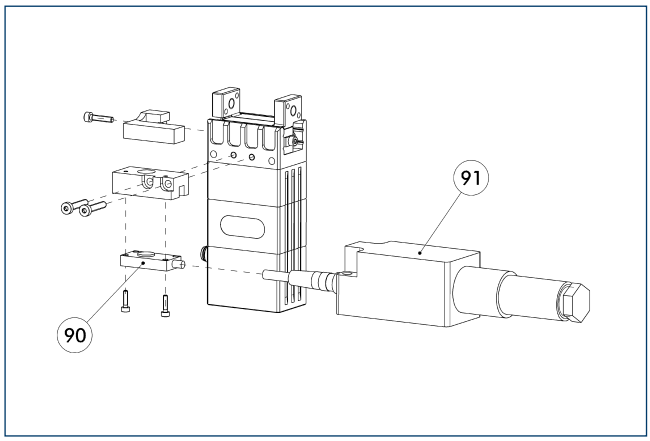

90 FPS-S sensor

91 FPS-F5 / -F5 T electronic processor

Flexible position monitoring of up to five positions.

Description	ID	Often combined
Mounting kit for FPS		
AS-FPS-MPG-plus 50	0301763	
Sensor		
FPS-S 13	0301705	
Electronic processor		
FPS-F5	0301805	●
FPS-F5 T	0301807	

ⓘ When using a FPS system, a FPS sensor (FPS-S) and a control unit (FPS-F5 / F5 T) are required for each gripper as well as a mounting kit (AS), if listed. Cable extensions (KV) are available as options in the "Accessories" catalog section.

Cable connector / cable extension

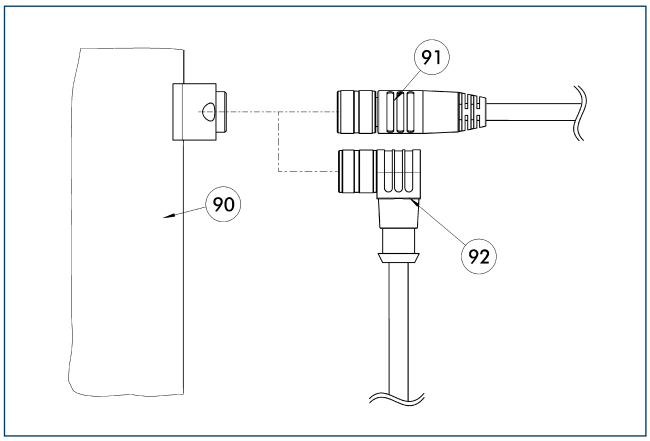

90 Connecting point for component

91 Cable with straight connection

92 Cable with angular connection

Description	ID	Length [m]	Connection electric cabinet sided	Often combined
Connection cables				
KA BG08-L 4P-0500	0307767	5	open wires	●
KA BG08-L 4P-1000	0307768	10	open wires	
KA BW08-L 4P-0500	0307765	5	open wires	
KA BW08-L 4P-1000	0307766	10	open wires	

ⓘ BG stands for a connection cable with a straight female connector and BW for an angled female connector.

Flexible. Compact. High Performance Density.

MEG Small Components Gripper

Electric 2-finger parallel gripper with smooth-running base jaws guided on roller bearings

Field of Application

Gripping and movement of small to medium-sized workpieces with flexible force, stroke, and speed in low-contamination environment

Advantages – Your benefit

Drive design of step motor for independent actuation without pneumatics or hydraulics

External electronic system for control-intensive handling tasks with pre-positioning capability

Cross roller guidance for precise gripping through base jaw guidance with minimum play

Base jaws guided on double roller bearings for low friction and smooth running

Mounting from two sides in three screw directions for universal and flexible gripper assembly

Sizes	Weight	Gripping force	Stroke per jaw	Workpiece weight
Quantity: 3	0.47 .. 1.42 kg	40 .. 140 N	6 .. 10 mm	0.2 .. 0.7 kg

Functional Description

The spindle is moved upwards or downwards via a step motor drive.
The lateral hooks on top of the spindle guide the angled groove of both base jaws, and this motion transfers into a synchronized opening or closing of the base fingers.

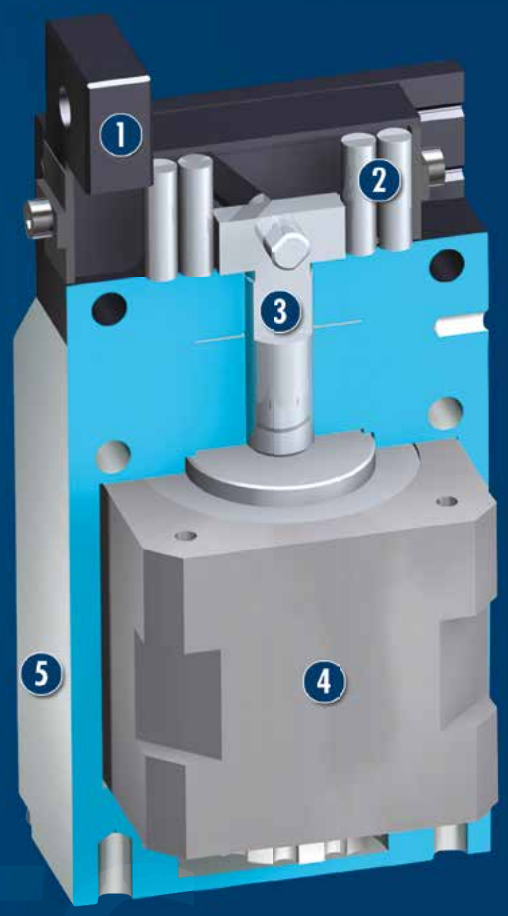

① **Base jaw**
for the connection of workpiece-specific gripper fingers

② **Cross roller guidance**
Precise gripping through base jaw guide with minimum play

③ **Wedge-hook design**
for high power transmission and centric gripping

④ **Drive**
Step motor with spindle

⑤ **Housing**
Weight-optimized through application of high-strength aluminum alloy

CAD data, operating manuals and other current product documents are available at **www.schunk.com**

General Notes about the Series

Operating principle: Wedge-hook kinematics

Housing material: Aluminum alloy, coated

Base jaw material: Steel

Actuation: electrically, via step motor or spindle

Warranty: 24 months (details, general terms and conditions and operating manuals can be downloaded at www.schunk.com)

Scope of delivery: Enclosed pack with centering sleeve, assembly and operating manual with declaration of incorporation. An MEG_C external controller and a KA connection cable or similar are required for operation of the MEG gripper. These are optionally available and are not included in the scope of delivery.

Gripping force: is the arithmetic total of the gripping force applied to each gripper jaw at distance P (see illustration).

Finger length: is measured from the upper edge of the gripper housing in the direction of the main axis. The breach of the max. permitted finger length can bring higher abrasion.

Repeat accuracy: is defined as the spread of the limit position after 100 consecutive strokes.

Workpiece weight: is calculated for a force-fit connection with a coefficient of friction of 0.1 and a safety factor of 2 against slippage of the workpiece on acceleration due to gravity g. Considerably heavier workpiece weights are permitted with form-fit gripping.

Closing and opening times: Minimum closing and opening times are only the movement times of the base jaws at max. speed, max. acceleration without electrical restrictions (maximum current) and observance of the maximum permissible mass per finger.

Nominal currents: may be permanently applied. The information in the respective product documentation must be observed for all current levels beyond the rated current up to the maximum current.

Application example

Compact dual triple-axis system, electrically powered, as an automatic loading unit for small components

1. LDM Universal Linear Module
2. LDT Universal Linear Module
3. LDN Universal Linear Module
4. MEG electric 2-Finger Parallel Gripper

SCHUNK offers more ...

The following components make the product MEG even more productive – the suitable addition for the highest functionality, flexibility, reliability, and controlled production.

Centering Sleeves

KA Connection Cable

Control Unit

Finger Blanks

Plastic Inserts

Gripper Pads

Carbide Clamping Inserts

ⓘ Further information regarding the products can be found on the following product pages or at www.schunk.com. Please contact us for further information: SCHUNK technical hotline +49-7133-103-2696

Options and special Information

External electronic system: The control of the MEG-EC gripper takes place via the separately available MEG-C external controller.
Simple homing: Via digital and analog inputs the gripper parameters force, position and speed as well as the various operating modes are predefined. The status of the gripper can be monitored via digital and analog outputs.
Connection cable KA: Connection cables in various lengths with angled or straight sleeves can be ordered for the connection of gripper and controller.

MEG 40

SCHUNK Grippers electric | 2-Finger Parallel Grippers | Small Components Gripper

Gripping force

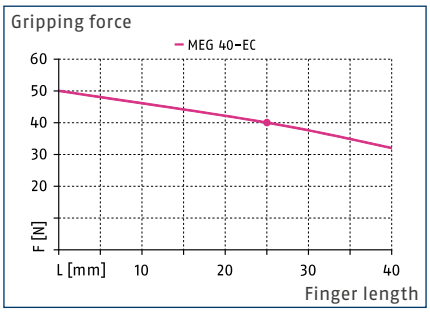

Finger load

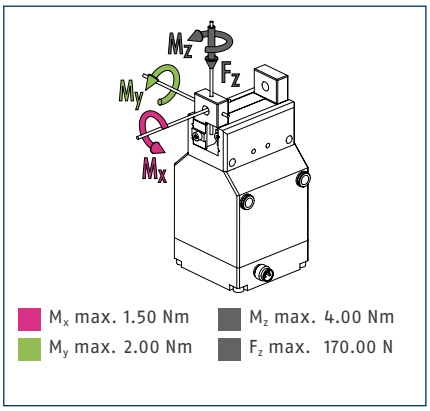

ⓘ The specified torques and forces are static values, apply for each base jaw, and may occur simultaneously. M_y may occur in addition to the torque generated by the gripping force.

Technical data

Description		MEG 40 EC
ID		0306008
General operating data		
Stroke per jaw	[mm]	6
min. / max. gripping force	[N]	35/40
Recommended workpiece weight	[kg]	0.2
max. permitted finger length	[mm]	40
max. permitted weight per finger	[kg]	0.08
Repeat accuracy	[mm]	0.02
Closing- / opening time	[s]	0.62/0.62
max. speed	[mm/s]	9.5
Weight	[kg]	0.47
min. / max. ambient temperature	[°C]	5/55
IP class		30
Electrical operating data		
Controller electronics		external
Controller type		MEG-C 040
Nominal voltage	[V DC]	24
Nominal current	[A]	0.6
max. power supply	[A]	1.5
Communication interface		Digital and analogue inputs and outputs
Number of digital inputs/outputs		2/2
Number of analouge inputs / outputs		3/3

Main view

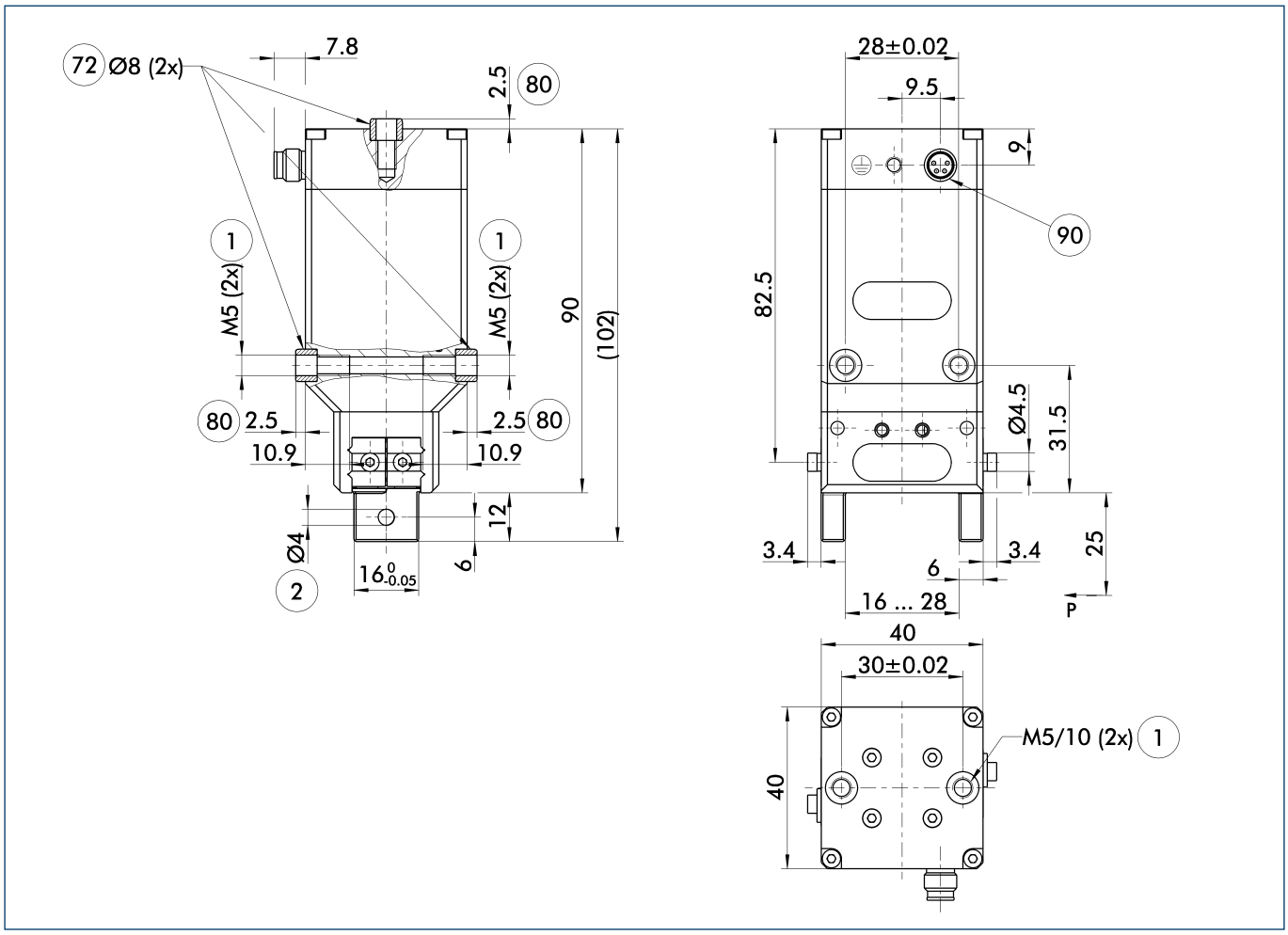

The drawing shows the basic version of the gripper with open jaws, without dimensional consideration of the options described below.

1. Gripper connection
2. Finger connection
72. Fit for centering sleeves
80. Depth of the centering sleeve hole in the mating part
90. Electrical connection

Maximum permitted finger projection

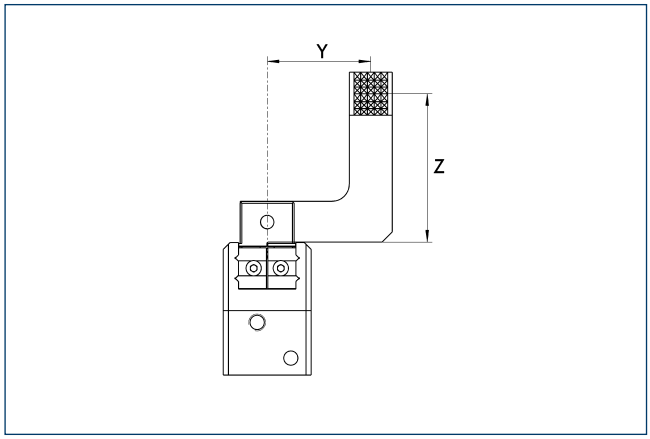

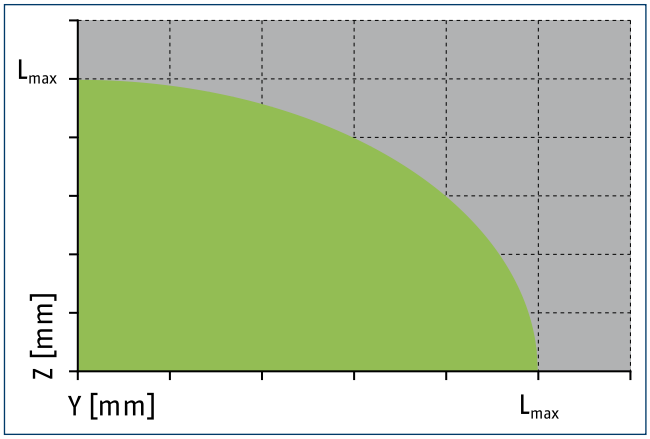

Permitted range

Inadmissible range

L_{max} is equivalent to the maximum permitted finger length, see the chart of technical specifications.

Jaw design

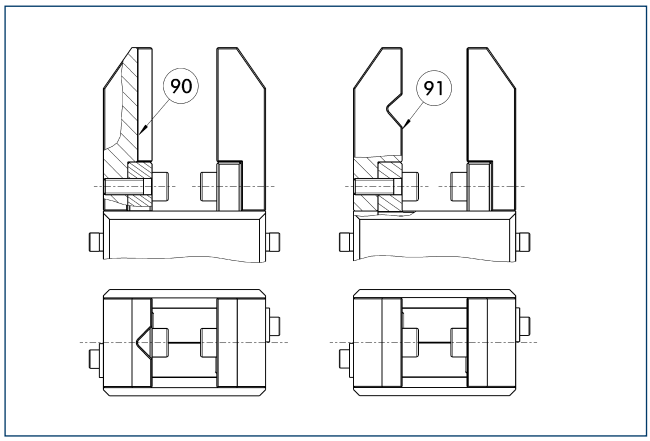

(90) Vertical prism (91) Horizontal prism

A three-point support of the gripped workpiece is beneficial for gripping the workpiece with repeat accuracy and process reliability. More than three support points lead to a redundancy of the system. The drawing shows two alternative recommendations for the jaw design for coaxial and radial gripping of a cylindrical part.

ABR-MPG-plus 40 finger blanks

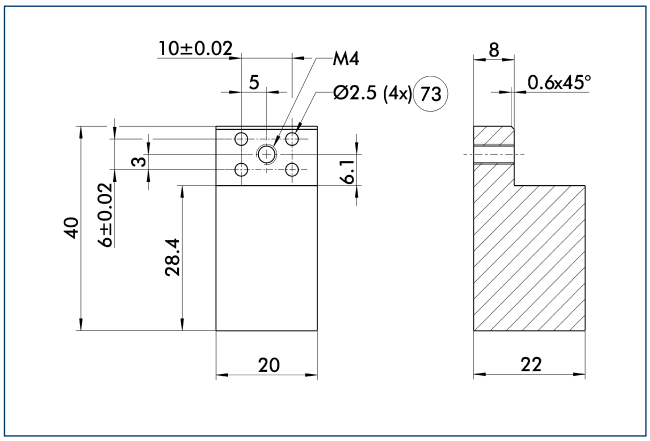

(73) Fit for centering pins

Finger blanks for customized subsequent machining.

Description	ID	Material	Scope of delivery
Finger blanks			
ABR-MPG-plus 40	0340213	Aluminum	2

Cable connector / cable extension

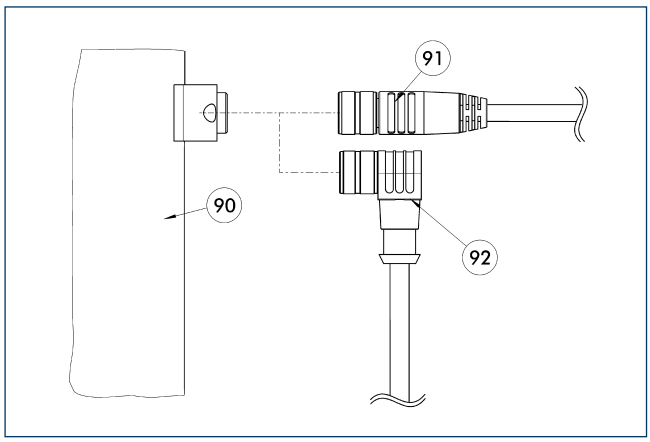

(90) Connecting point for component
(91) Cable with straight connection
(92) Cable with angular connection

Description	ID	Length [m]	Connection electric cabinet sided	Often combined
Connection cables				
KA BG08-L 4P-0500	0307767	5	open wires	●
KA BG08-L 4P-1000	0307768	10	open wires	
KA BW08-L 4P-0500	0307765	5	open wires	
KA BW08-L 4P-1000	0307766	10	open wires	

ⓘ BG stands for a connection cable with a straight female connector and BW for an angled female connector.

Motor controller

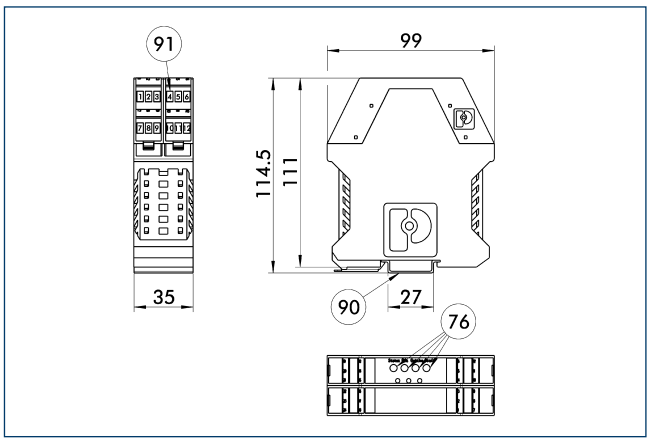

(76) LED
(91) Terminal strips
(90) Mounting on DIN rail

Description	ID	
Controller		
MEG-C-40	0307004	

MEG 50

SCHUNK Grippers electric | 2-Finger Parallel Grippers | Small Components Gripper

Gripping force

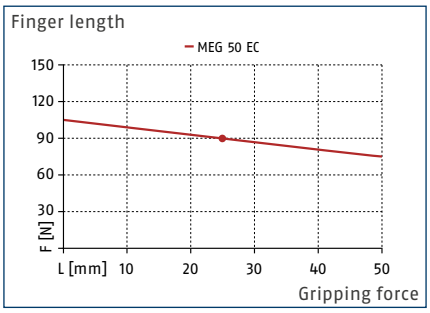

Finger load

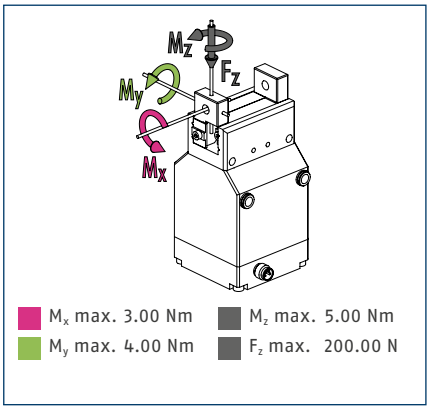

ⓘ The specified torques and forces are static values, apply for each base jaw, and may occur simultaneously. M_y may occur in addition to the torque generated by the gripping force.

Technical data

Description		MEG 50 EC
ID		0306010
General operating data		
Stroke per jaw	[mm]	8
min. / max. gripping force	[N]	60/90
Recommended workpiece weight	[kg]	0.45
max. permitted finger length	[mm]	50
max. permitted weight per finger	[kg]	0.14
Repeat accuracy	[mm]	0.02
Closing- / opening time	[s]	0.3/0.3
max. speed	[mm/s]	35
Weight	[kg]	0.71
min. / max. ambient temperature	[°C]	5/55
IP class		30
Electrical operating data		
Controller electronics		external
Controller type		MEG-C 050
Nominal voltage	[V DC]	24
Nominal current	[A]	0.9
max. power supply	[A]	1.5
Communication interface		Digital and analogue inputs and outputs
Number of digital inputs/outputs		2/2
Number of analouge inputs / outputs		3/3

Main view

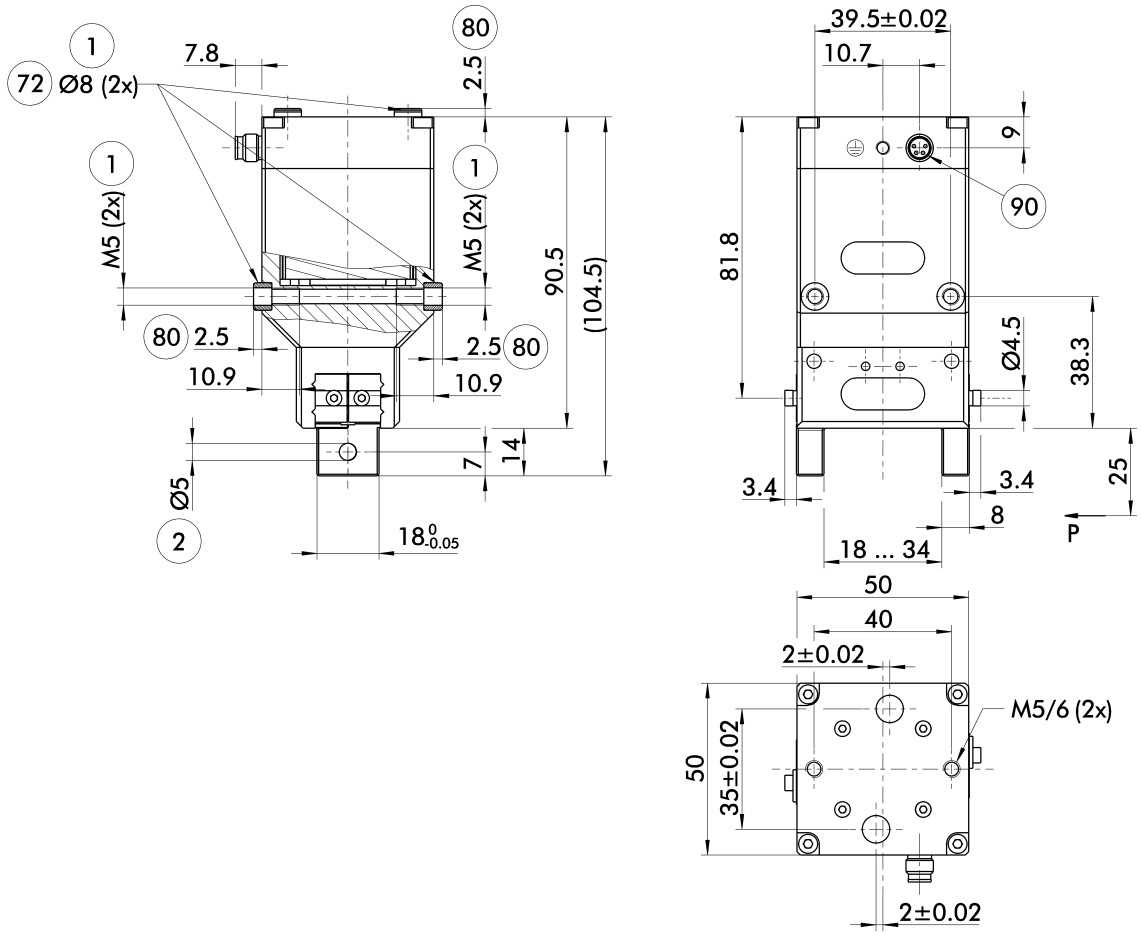

The drawing shows the basic version of the gripper with open jaws, without dimensional consideration of the options described below.

1. Gripper connection
2. Finger connection
72. Fit for centering sleeves
80. Depth of the centering sleeve hole in the mating part
90. Electrical connection

Maximum permitted finger projection

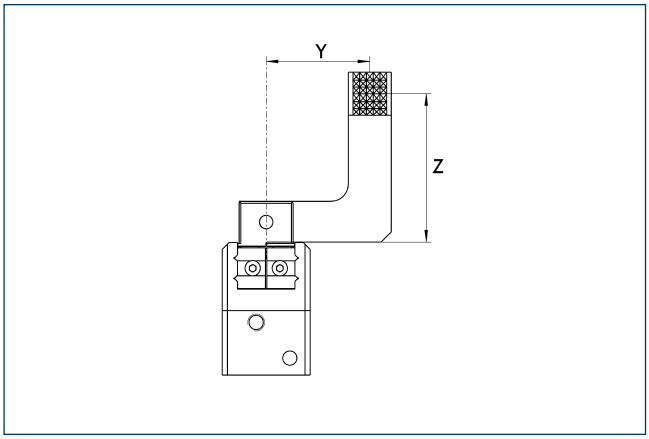

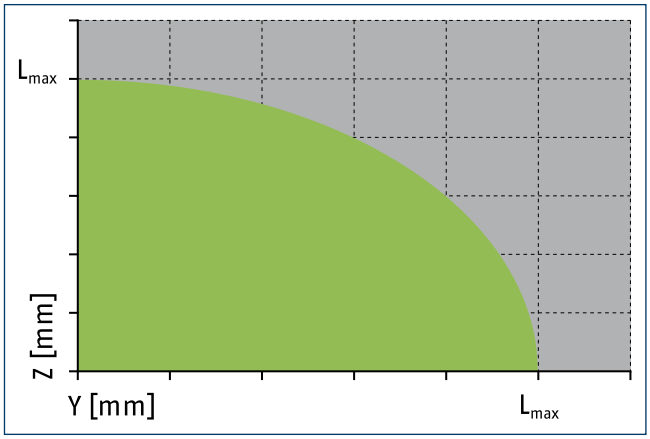

Permitted range

Inadmissible range

L_{max} is equivalent to the maximum permitted finger length, see the chart of technical specifications.

Jaw design

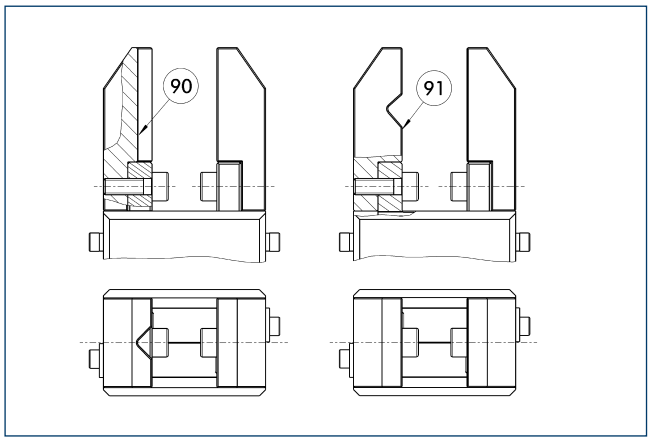

(90) Vertical prism (91) Horizontal prism

A three-point support of the gripped workpiece is beneficial for gripping the workpiece with repeat accuracy and process reliability. More than three support points lead to a redundancy of the system. The drawing shows two alternative recommendations for the jaw design for coaxial and radial gripping of a cylindrical part.

ABR-MPG-plus 50 finger blanks

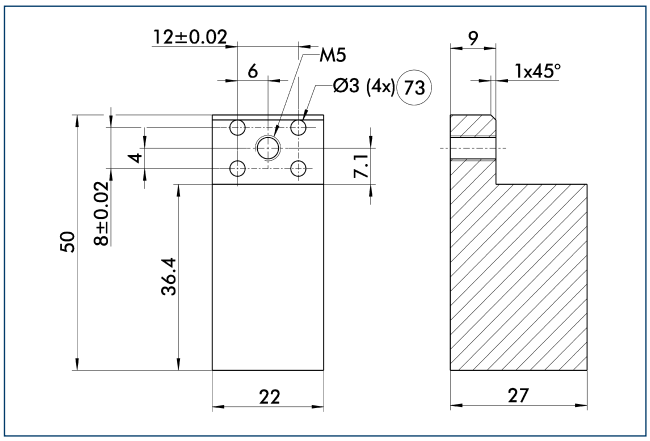

(73) Fit for centering pins

Finger blanks for customized subsequent machining.

Description	ID	Material	Scope of delivery
Finger blanks			
ABR-MPG-plus 50	0340214	Aluminum	2

Cable connector / cable extension

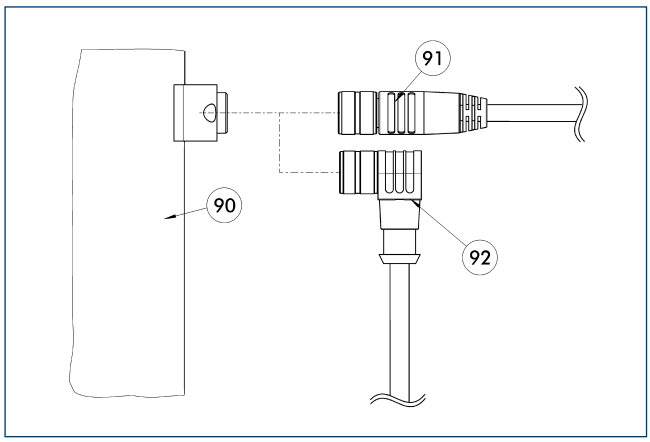

(90) Connecting point for component
(91) Cable with straight connection
(92) Cable with angular connection

Description	ID	Length [m]	Connection electric cabinet sided	Often combined
Connection cables				
KA BG08-L 4P-0500	0307767	5	open wires	●
KA BG08-L 4P-1000	0307768	10	open wires	
KA BW08-L 4P-0500	0307765	5	open wires	
KA BW08-L 4P-1000	0307766	10	open wires	

ⓘ BG stands for a connection cable with a straight female connector and BW for an angled female connector.

Motor controller

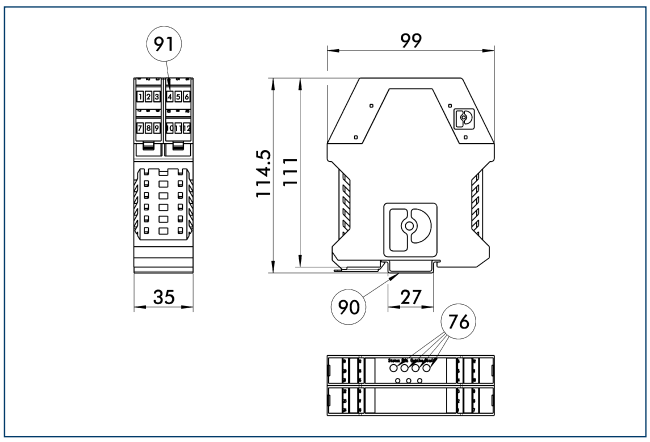

(76) LED
(91) Terminal strips
(90) Mounting on DIN rail

Description	ID	
Controller		
MEG-C-50	0307005	

MEG 64

SCHUNK Grippers electric | 2-Finger Parallel Grippers | Small Components Gripper

Gripping force

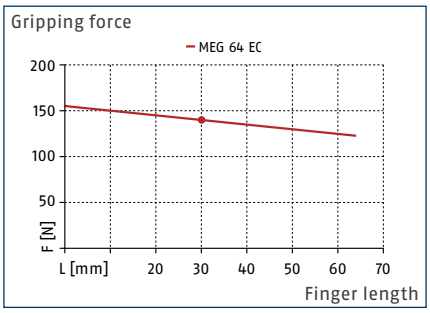

Finger load

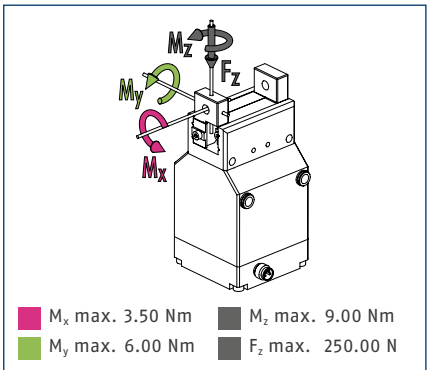

ⓘ The specified torques and forces are static values, apply for each base jaw, and may occur simultaneously. M_y may occur in addition to the torque generated by the gripping force.

Technical data

Description		MEG 64 EC
ID		0306012
General operating data		
Stroke per jaw	[mm]	10
min. / max. gripping force	[N]	40/140
Recommended workpiece weight	[kg]	0.7
max. permitted finger length	[mm]	64
max. permitted weight per finger	[kg]	0.24
Repeat accuracy	[mm]	0.02
Closing- / opening time	[s]	0.6/0.6
max. speed	[mm/s]	17
Weight	[kg]	1.42
min. / max. ambient temperature	[°C]	5/55
IP class		30
Electrical operating data		
Controller electronics		external
Controller type		MEG-C 064
Nominal voltage	[V DC]	24
Nominal current	[A]	1.3
max. power supply	[A]	1.5
Communication interface		Digital and analogue inputs and outputs
Number of digital inputs/outputs		2/2
Number of analouge inputs / outputs		3/3

Main view

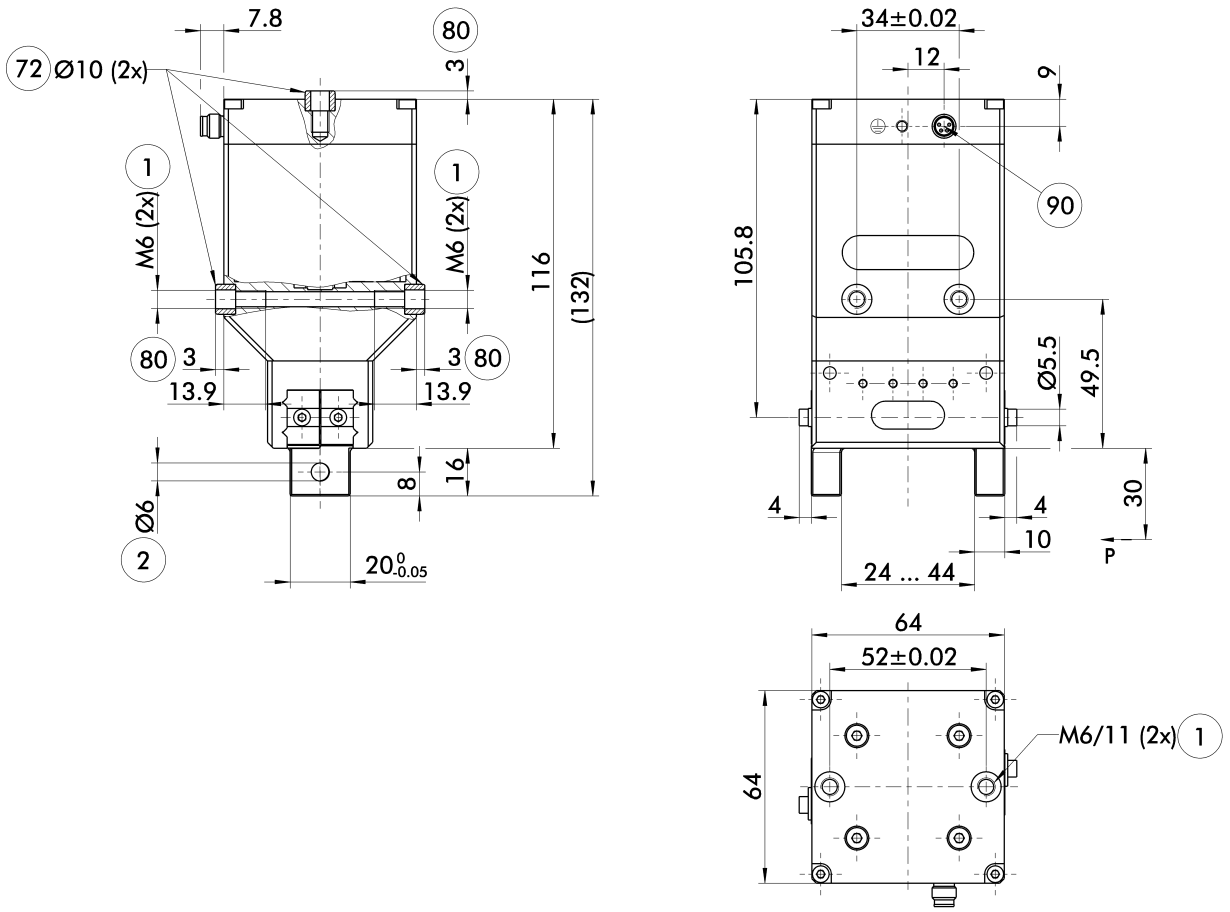

The drawing shows the basic version of the gripper with open jaws, without dimensional consideration of the options described below.

1. Gripper connection
2. Finger connection
72. Fit for centering sleeves
80. Depth of the centering sleeve hole in the mating part
90. Electrical connection

Maximum permitted finger projection

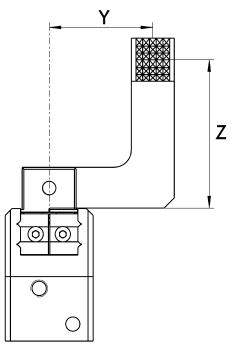

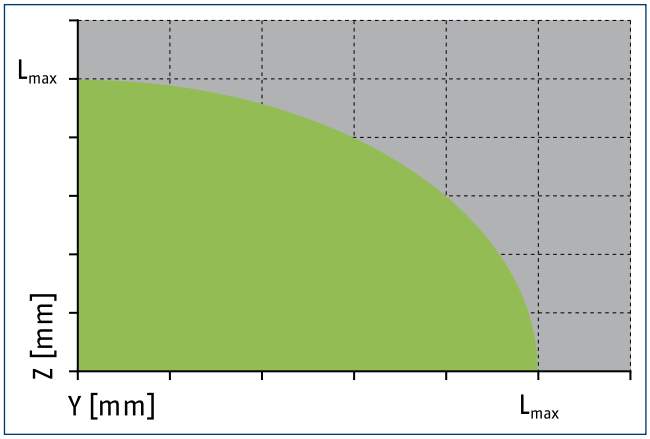

Permitted range

Inadmissible range

L_{max} is equivalent to the maximum permitted finger length, see the chart of technical specifications.

Jaw design

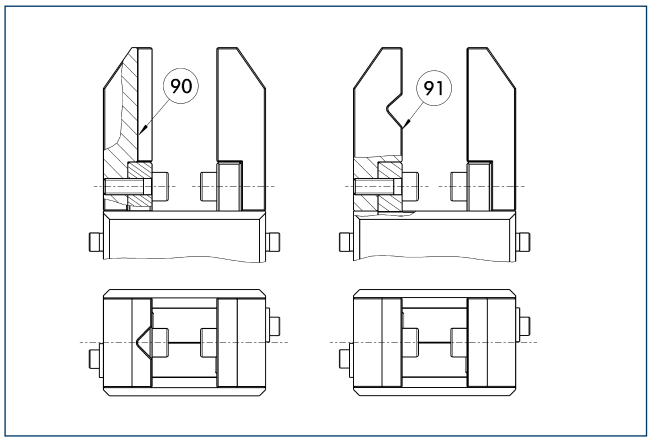

(90) Vertical prism (91) Horizontal prism

A three-point support of the gripped workpiece is beneficial for gripping the workpiece with repeat accuracy and process reliability. More than three support points lead to a redundancy of the system. The drawing shows two alternative recommendations for the jaw design for coaxial and radial gripping of a cylindrical part.

ABR-MPG-plus 64 finger blanks

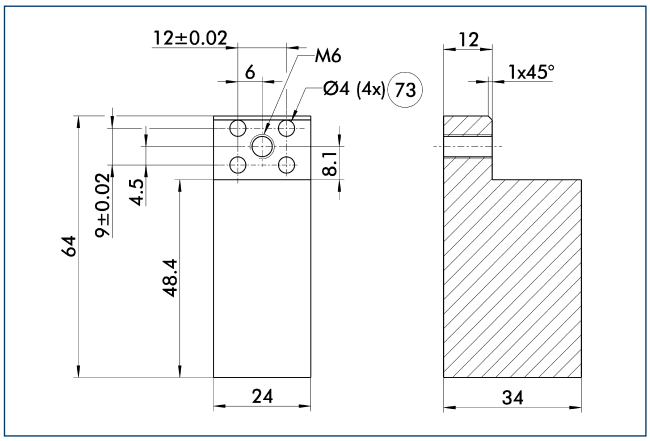

(73) Fit for centering pins

Finger blanks for customized subsequent machining.

Description	ID	Material	Scope of delivery
Finger blanks			
ABR-MPG-plus 64	0340215	Aluminum	2

Cable connector / cable extension

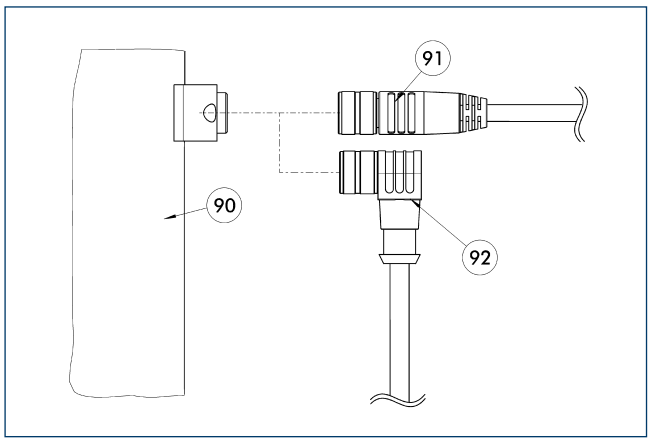

(90) Connecting point for component
(91) Cable with straight connection
(92) Cable with angular connection

Description	ID	Length [m]	Connection electric cabinet sided	Often combined
Connection cables				
KA BG08-L 4P-0500	0307767	5	open wires	●
KA BG08-L 4P-1000	0307768	10	open wires	
KA BW08-L 4P-0500	0307765	5	open wires	
KA BW08-L 4P-1000	0307766	10	open wires	

ⓘ BG stands for a connection cable with a straight female connector and BW for an angled female connector.

Motor controller

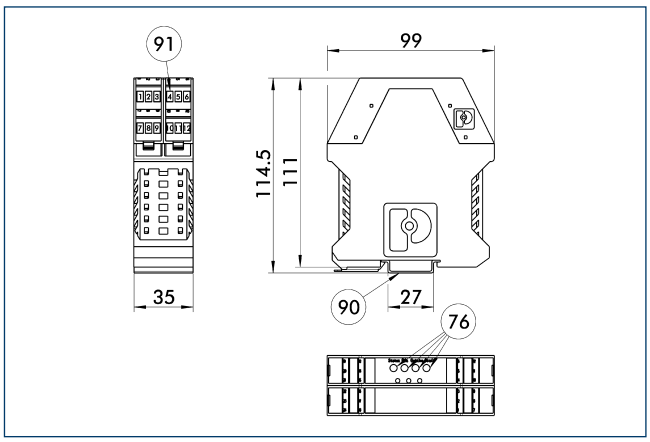

(76) LED
(91) Terminal strips
(90) Mounting on DIN rail

Description	ID	
Controller		
MEG-C-64	0307006	

Robust. Flexible. Strong.
EGN Universal Gripper

Servo-electric 2-finger parallel gripper with high gripping force and moment loads due to the multi-tooth guidance

Field of Application

Optimal standard solution for many areas of application; flexible use due to controllable gripping force, position and speed

Advantages – Your benefit

Drive design of servomotor for flexible use

With external electronics for simple integration into existing servo-controlled concepts via Profibus-DP, or CAN bus

Pre-positioning capability to reduce cycle times through a short working stroke

Robust multi-tooth guidance for precise handling

High maximum moments possible suitable for using long gripper fingers

Mounting from two sides in three screw directions for universal and flexible gripper assembly

Sizes	Weight	Gripping force	Stroke per jaw	Workpiece weight
Quantity: 3	0.84 .. 3.4 kg	400 .. 1000 N	8 .. 16 mm	2 .. 5 kg

Functional Description

The spindle nut which is mounted on bearings, transfers the rotary motion of the servomotor into an axial motion.

The angled active surfaces of the wedge-hook produce a synchronized, parallel jaw motion.

① **Wedge-hook design**
for high power transmission and centric gripping

② **Multiple-tooth guidance**
Precise gripping even with long gripper fingers thanks to a heavy-duty base jaw with minimal play

③ **Housing**
Weight-optimized through application of high-strength aluminum alloy

④ **Spindle nut**
Transforms the rotational movement into the axial movement of the wedge-hook

⑤ **Drive**
DC servomotor with resolver

CAD data, operating manuals and other current product documents are available at **www.schunk.com**

General Notes about the Series

Operating principle: Wedge-hook kinematics

Housing material: Aluminum alloy, coated

Base jaw material: Steel

Actuation: servo-electric, via brushless DC servo motor and spindle drive

Warranty: 24 months (details, general terms and conditions and operating manuals can be downloaded at www.schunk.com)

Scope of delivery: Enclosed pack with centering sleeve, assembly and operating manual with declaration of incorporation. An external ECM controller is required for operation of the EGN gripper. Connection cables are also required for the EGN-S plug version. The controller and connection cable are optionally available and not included in the scope of delivery.

Gripping force: is the arithmetic total of the gripping force applied to each gripper jaw at distance P (see illustration).

Finger length: is measured from the upper edge of the gripper housing in the direction of the main axis. The breach of the max. permitted finger length can bring higher abrasion. The maximum permissible finger length applies up to the nominal operating pressure. With higher pressures, the finger length must be reduced proportionally to the nominal operating pressure.

Repeat accuracy: is defined as the spread of the limit position after 100 consecutive strokes.

Workpiece weight: is calculated for a force-fit connection with a coefficient of friction of 0.1 and a safety factor of 2 against slippage of the workpiece on acceleration due to gravity g. Considerably heavier workpiece weights are permitted with form-fit gripping.

Closing and opening times: are purely the times that the base jaws or fingers are in motion. Valve switching times, hose filling times or PLC reaction times are not included in the above times and must be taken into consideration when determining cycle times.

Application example

Completely electrically powered axis gantry for loading and unloading pallets with various greatly differing components.

1. EGN servo-electric 2-Finger Parallel Gripper
2. Vertical Axis with spindle drive HSB Beta
3. Belt-driven Axis HSB Beta
4. BSWS Jaw Quick-change System

SCHUNK offers more ...

The following components make the product EGN even more productive – the suitable addition for the highest functionality, flexibility, reliability, and controlled production.

Centering Sleeves

Finger Blanks

Jaw Quick-change System

Force Measuring Jaws

Safety Module ECS

ECM Controller

Protection Cover

ⓘ Further information regarding the products can be found on the following product pages or at www.schunk.com. Please contact us for further information: SCHUNK technical hotline +49-7133-103-2696

Options and special Information

Control via external ECM controller: The electrical control of the gripper takes place via the separately available ECM controller. Connection of the controller to the superordinate servo controlled concept can take place via Profibus or CAN bus. Both connection interfaces assure simple integration into the superordinate control system and enable the design of industrial bus topologies.
Plug version EGN-S: Plug version EGN-S is available for the ECM controller in addition to the standard variant with 5 m attached connection cable. The gripper has a 15 cm cable and stepped Y-plug in this version. Drag-chain-compatible or robot-compatible power and sensor cables are separately available.
Dust-tight version SD: absolutely sealed, increased degree of protection against the ingress of materials.

EGN 80

SCHUNK Grippers electric | 2-Finger Parallel Grippers | Universal Gripper

Gripping force

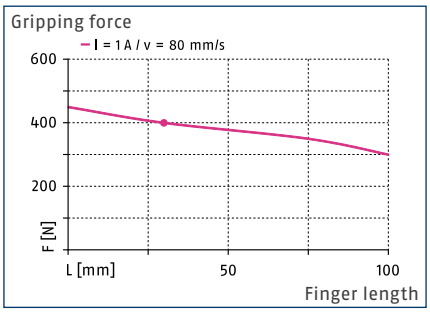

Speed

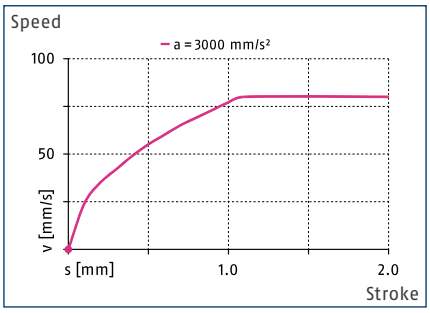

Finger load

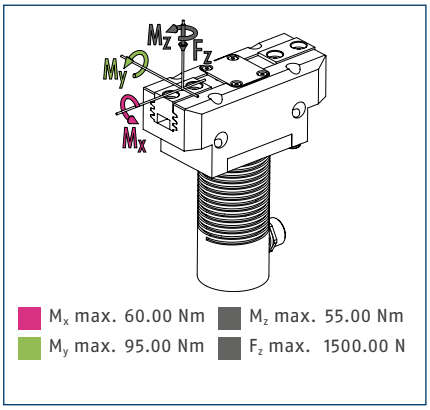

M_x max. 60.00 Nm | M_z max. 55.00 Nm
M_y max. 95.00 Nm | F_z max. 1500.00 N

ⓘ The specified torques and forces are static values, apply for each base jaw, and may occur simultaneously. M_y may occur in addition to the torque generated by the gripping force.

Technical data

Description		EGN 80	EGN 80-S
ID		0306100	0306104
General operating data			
Stroke per jaw	[mm]	8	8
min. / max. gripping force	[N]	170/400	170/400
Recommended workpiece weight	[kg]	2	2
max. permitted finger length	[mm]	100	100
max. permitted weight per finger	[kg]	0.6	0.6
Repeat accuracy	[mm]	±0.01	±0.01
Closing- / opening time	[s]	0.35/0.35	0.35/0.35
max. speed	[mm/s]	80	80
max. acceleration	[mm/s²]	3000	3000
Weight	[kg]	0.84	0.84
min. / max. ambient temperature	[°C]	5/55	5/55
IP class		41	41
Electrical operating data			
Controller electronics		external	external
Controller type		ECM-EGN080	ECM-EGN080
Nominal voltage	[V DC]	24	24
Nominal current	[A]	1	1
max. power supply	[A]	4	4
Communication interface		see ECM controller	see ECM controller
Options and their characteristics			
Dust-tight version		37306100	37306104
IP class		64	64
Weight	[kg]	0.94	0.94

ⓘ Plug version EGN-S is available for the ECM controller in addition to the standard variant with 5 m attached connection cable. The gripper has a 15 cm cable and stepped Y-plug in this version. Drag-chain-compatible or robot-compatible power and sensor cables are separately available.

Main view

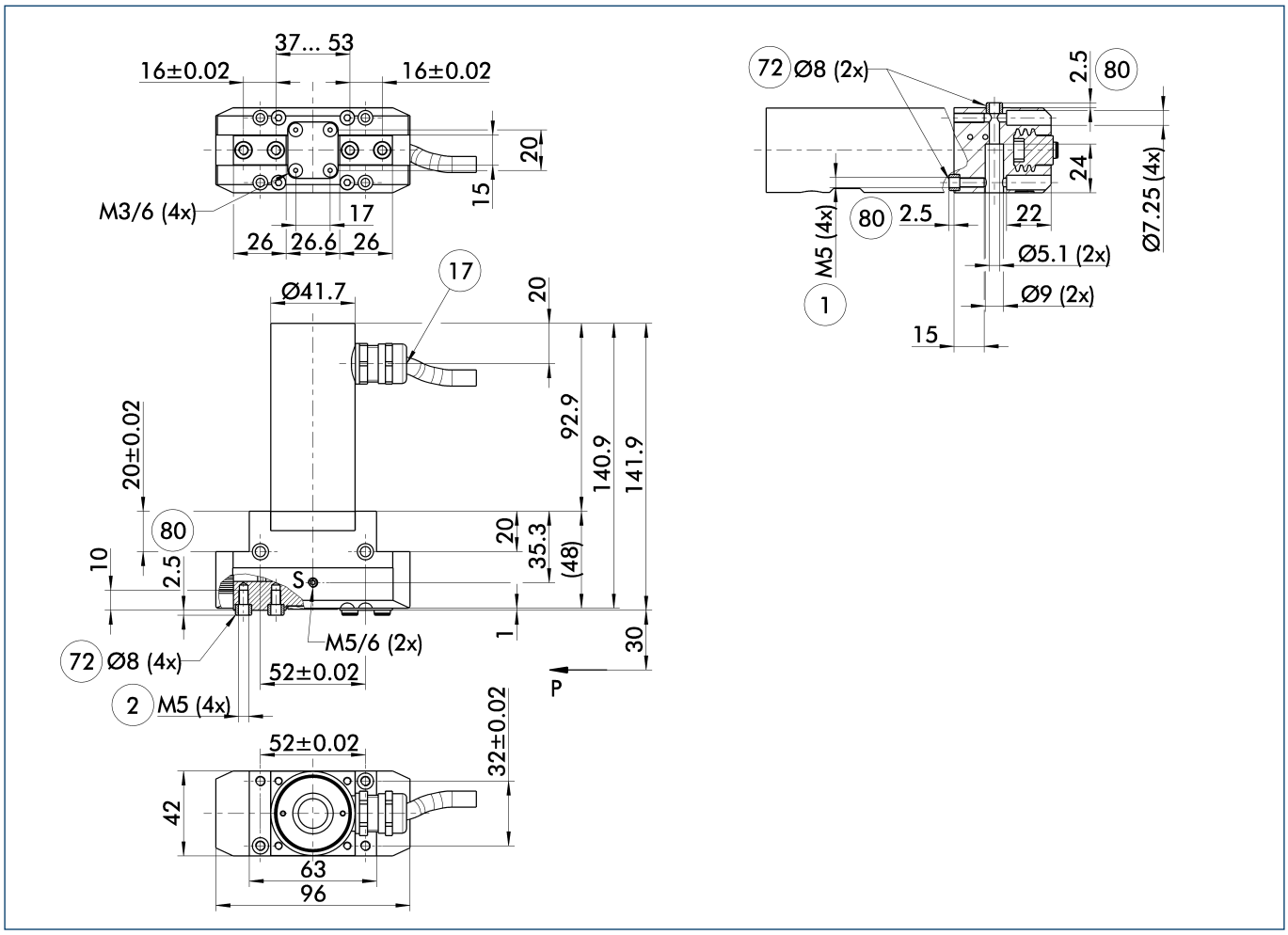

The drawing shows the gripper in the basic version with closed jaws, without dimensional consideration of the options described below.

1. Gripper connection
2. Finger connection
17. Cable outlet
72. Fit for centering sleeves
80. Depth of the centering sleeve hole in the mating part
S Air purge connection (0.5 ... 1 bar)

Maximum permitted finger projection

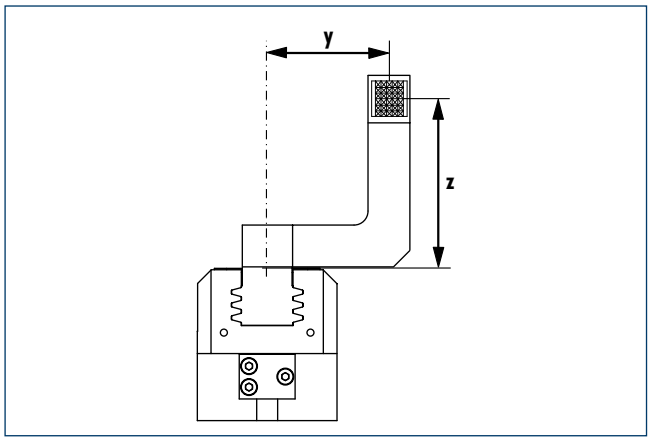

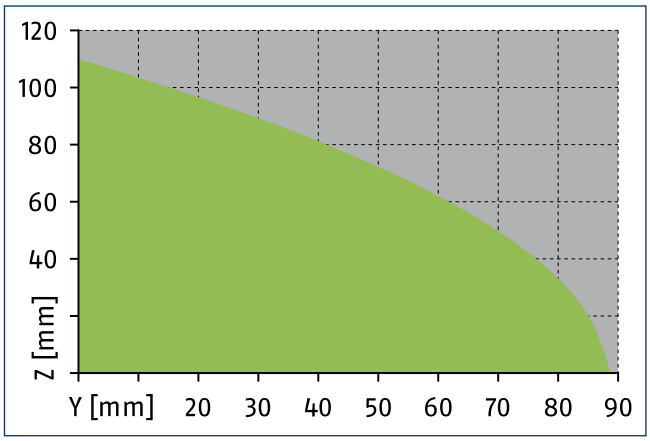

Permitted range Inadmissible range

The curve applies for the base version (Stroke -1). For other versions, the curve must be offset in parallel corresponding to the max. permissible finger length.

Plug version

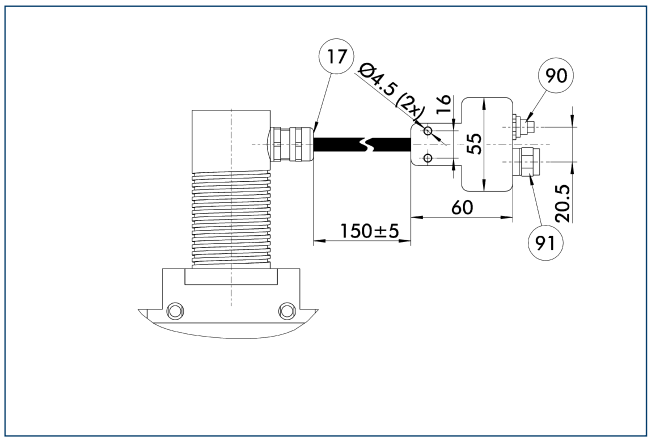

(17) Cable outlet
(90) Sensor plug (M12) for sensor cable
(91) Motor plug (M17) for power cable

The drawing shows the plug version. It comprises a Y-plug and approximately 15 cm of cable between the module and plug.

Dust-tight version

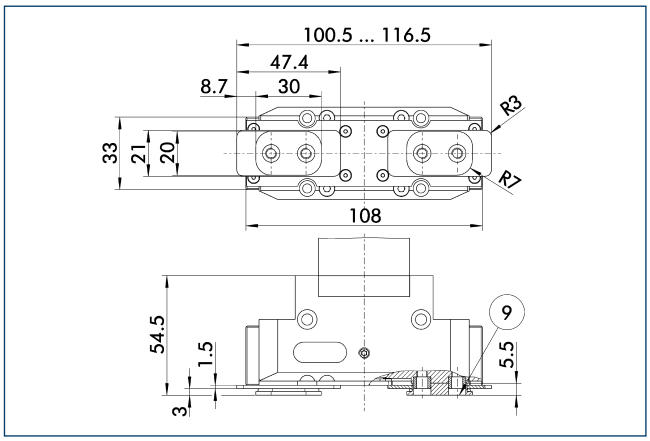

(9) For mounting screw connection diagram, see basic version

The dust-tight variant increases the tightness from IP40 to IP64 with the additional cover plate.

BSWS jaw quick-change systems

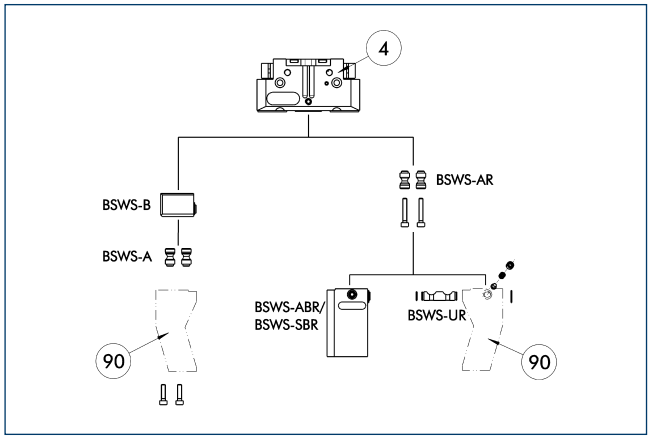

(4) Gripper
(90) Customized gripper fingers

There are various jaw quick-change systems available for the grippers. For detailed information, refer to the appropriate product.

Description	ID
Jaw quick-change system adapter	
BSWS-AR 80	0300093
BSWS-A 80	0303024
Jaw quick-change system base	
BSWS-B 80	0303025
Finger blanks with jaw quick-change system	
BSWS-ABR-PGZN-plus 80	0300073
BSWS-SBR-PGZN-plus 80	0300083
Jaw quick-change system reversed	
BSWS-UR 80	0302992

ⓘ Only the systems listed in the table can be used.

HUE EGN 80 protective cover

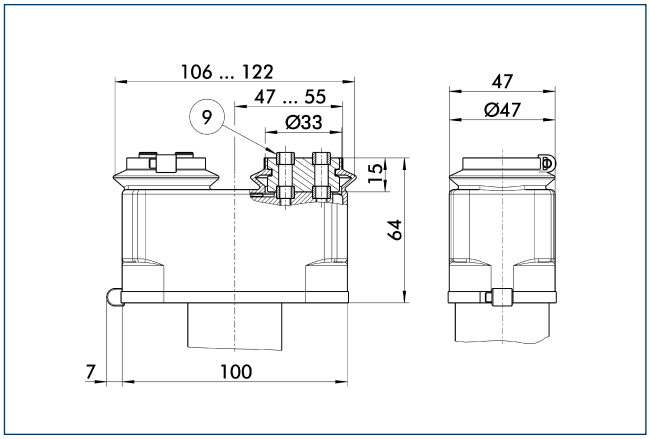

(9) For mounting screw connection diagram, see basic version

The HUE protective cover completely protects the gripper against external influences up to IP65 if an additional sealing of the cover bottom is provided as part of the application. The mounting diagram shifts by the height of the intermediate jaw.

Description	ID	IP class
Protection cover		
HUE EGN 80	0307040	65

ZBA L-plus 80 intermediate jaws

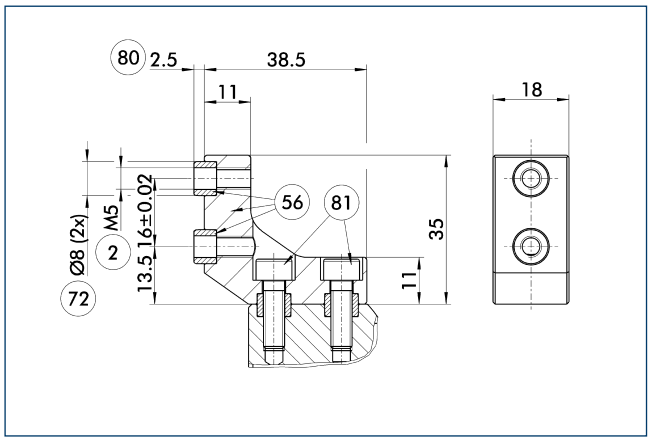

(2) Finger connection
(56) Included in delivery
(72) Fit for centering sleeves
(80) Depth of the centering sleeve hole in the mating part
(81) Not included in the scope of delivery

Optionally intermediate jaws can be used, enabling direct connection and alignment of top jaws and various standard accessories in Z-direction.

Description	ID	Material	Scope of delivery
Intermediate jaws			
ZBA-L-plus 80	0311732	Aluminum	1

ABR- / SBR-PGZN-plus 80 finger blanks

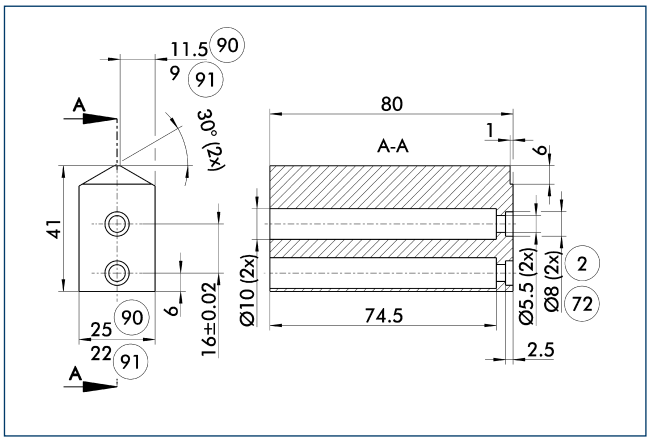

(2) Finger connection
(72) Fit for centering sleeves
(90) ABR-PGZN-plus
(91) SBR-PGZN-plus

Finger blanks for customized subsequent machining.

Description	ID	Material	Scope of delivery
Finger blanks			
ABR-PGZN-plus 80	0300011	Aluminum	1
SBR-PGZN-plus 80	0300021	16MnCr5	1

UZB 80 universal intermediate jaw

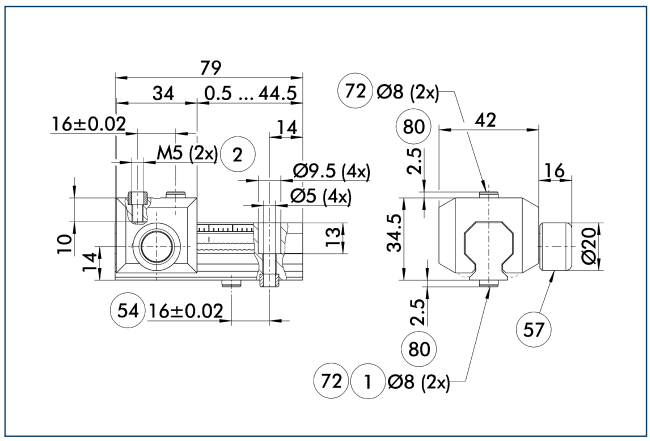

(1) Gripper connection
(2) Finger connection
(54) Optional right or left connection
(57) Locking
(72) Fit for centering sleeves
(80) Depth of the centering sleeve hole in the mating part

The universal intermediate jaw allows fast tool-free and reliable plugging and shifting of top jaws at the gripper.

Description	ID	Grid dimension [mm]
Universal intermediate jaw		
UZB 80	0300043	2
UZB-S 80	5518271	2
Finger blanks		
ABR-PGZN-plus 80	0300011	
SBR-PGZN-plus 80	0300021	

FMS-ZBA / ZBP 80 force-measuring jaws

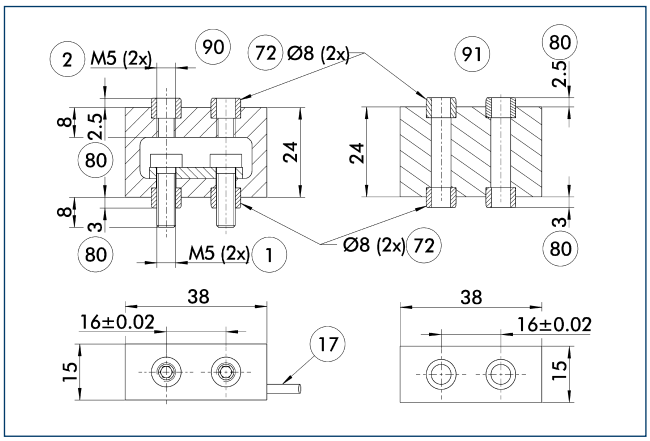

(1) Gripper connection
(2) Finger connection
(17) Cable outlet
(72) Fit for centering sleeves
(80) Depth of the centering sleeve hole in the mating part
(90) Active intermediate jaws
(91) Passive intermediate jaws

Force measuring jaws measure gripping forces, but can also determine workpiece weights or dimensional deviations. There are active and passive intermediate jaws (FMS-ZBA or FMS-ZBP). At least one active force measuring jaw is required per gripper, the rest can be passive. For each active jaw, a FMS-A control unit and a FMS-AK connection cable are required.

Description	ID	
Active intermediate jaws		
FMS-ZBA 80	0301834	
FMS-ZBP 80	0301835	
Electronic processor		
FMS-A1	0301810	

Power supply cable for SCHUNK ECM

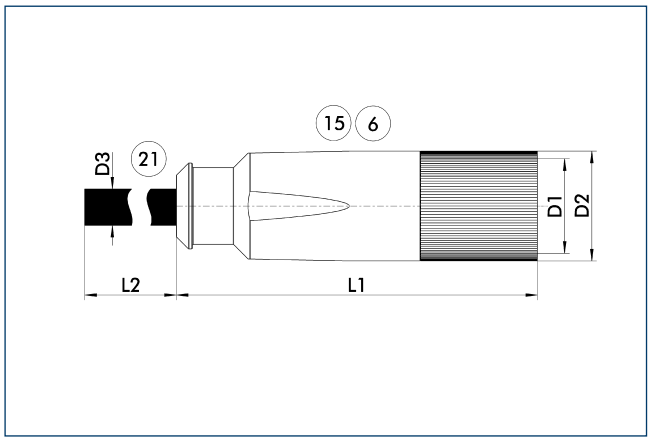

(6) Connection module side
(21) Connection controller side
(15) Socket

The power cables are supplied with open wires on the controller side for direct installation at the external ECM controller. The cables are available in robot-compatible (KAR) or drag chain compatible (KA) versions.

Description	ID	L_2 [m]	D_1
Power supply cable for SCHUNK ECM			
KA GLN1707-LK-00500-7	0306480	5	M17
KA GLN1707-LK-01000-7	0306481	10	M17
KA GLN1707-LK-01500-7	0306482	15	M17
KA GLN1707-LK-02000-7	0306483	20	M17
KAR GLN1707-LK-00500-7	0306485	5	M17
KAR GLN1707-LK-01000-7	0306486	10	M17
KAR GLN1707-LK-01500-7	0306487	15	M17
KAR GLN1707-LK-02000-7	0306488	20	M17

ⓘ Please observe the bending radius (7.5 times the cable diameter).

Sensor cable for SCHUNK ECM

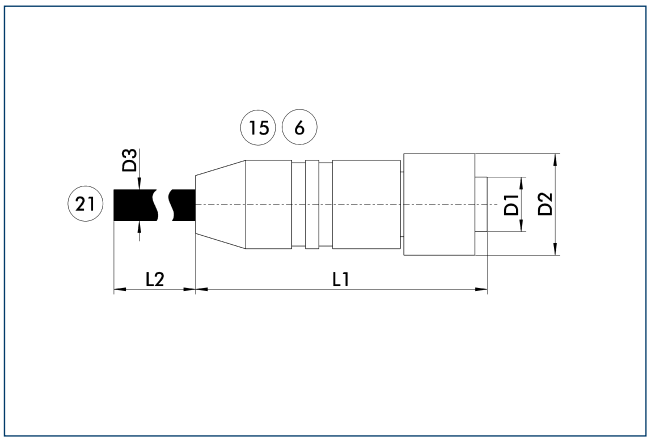

(6) Connection module side
(21) Connection controller side
(15) Socket

The sensor cables are supplied with pre-assembled plugs for direct assembly on the external ECM controller. The cables are available in robot-compatible (KAR) or drag chain compatible (KA) versions.

Description	ID	L_2 [m]	D_1
Sensor cable for SCHUNK ECM			
KA GLN1208-GK-00500-7	0306470	5	M12
KA GLN1208-GK-01000-7	0306471	10	M12
KA GLN0908-GK-01500-7	0306472	15	M12
KA GLN1208-GK-02000-7	0306473	20	M12
KAR GLN1208-GK-00500-7	0306475	5	M12
KAR GLN1208-GK-01000-7	0306476	10	M12
KAR GLN1208-GK-01500-7	0306477	15	M12
KAR GLN1208-GK-02000-7	0306478	20	M12

ⓘ Please observe the bending radius (7.5 times the cable diameter).

ECM motor controller

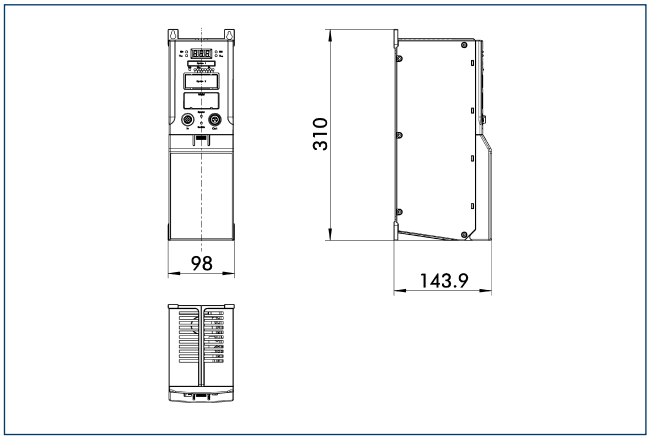

The ECM is required for operating the ERS rotary module (48 V) and the EGN and EZN electric grippers.

Description	
Controller	
ECM - EGN 80	

EGN 100

SCHUNK Grippers electric | 2-Finger Parallel Grippers | Universal Gripper

Gripping force

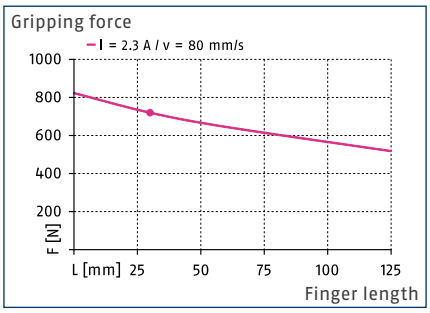

Speed

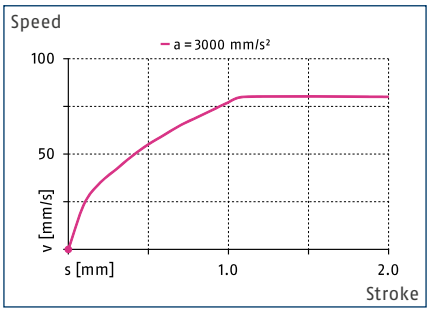

Finger load

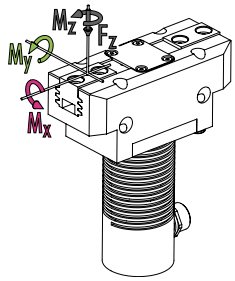

M_x max. 80.00 Nm | M_z max. 70.00 Nm
M_y max. 115.00 Nm | F_z max. 2000.00 N

ⓘ The specified torques and forces are static values, apply for each base jaw, and may occur simultaneously. M_y may occur in addition to the torque generated by the gripping force.

Technical data

Description		EGN 100	EGN 100-S
ID		0306101	0306105
General operating data			
Stroke per jaw	[mm]	10	10
min. / max. gripping force	[N]	170/720	170/720
Recommended workpiece weight	[kg]	3.6	3.6
max. permitted finger length	[mm]	125	125
max. permitted weight per finger	[kg]	1.1	1.1
Repeat accuracy	[mm]	±0.01	±0.01
Closing- / opening time	[s]	0.35/0.35	0.35/0.35
max. speed	[mm/s]	80	80
max. acceleration	[mm/s²]	3000	3000
Weight	[kg]	1.35	1.35
min. / max. ambient temperature	[°C]	5/55	5/55
IP class		41	41
Electrical operating data			
Controller electronics		external	external
Controller type		ECM-EGN100	ECM-EGN100
Nominal voltage	[V DC]	24	24
Nominal current	[A]	1.8	1.8
max. power supply	[A]	4	4
Communication interface		see ECM controller	see ECM controller
Options and their characteristics			
Dust-tight version		37306101	37306105
IP class		64	64
Weight	[kg]	1.53	1.53

ⓘ Plug version EGN-S is available for the ECM controller in addition to the standard variant with 5 m attached connection cable. The gripper has a 15 cm cable and stepped Y-plug in this version. Drag-chain-compatible or robot-compatible power and sensor cables are separately available.

Main view

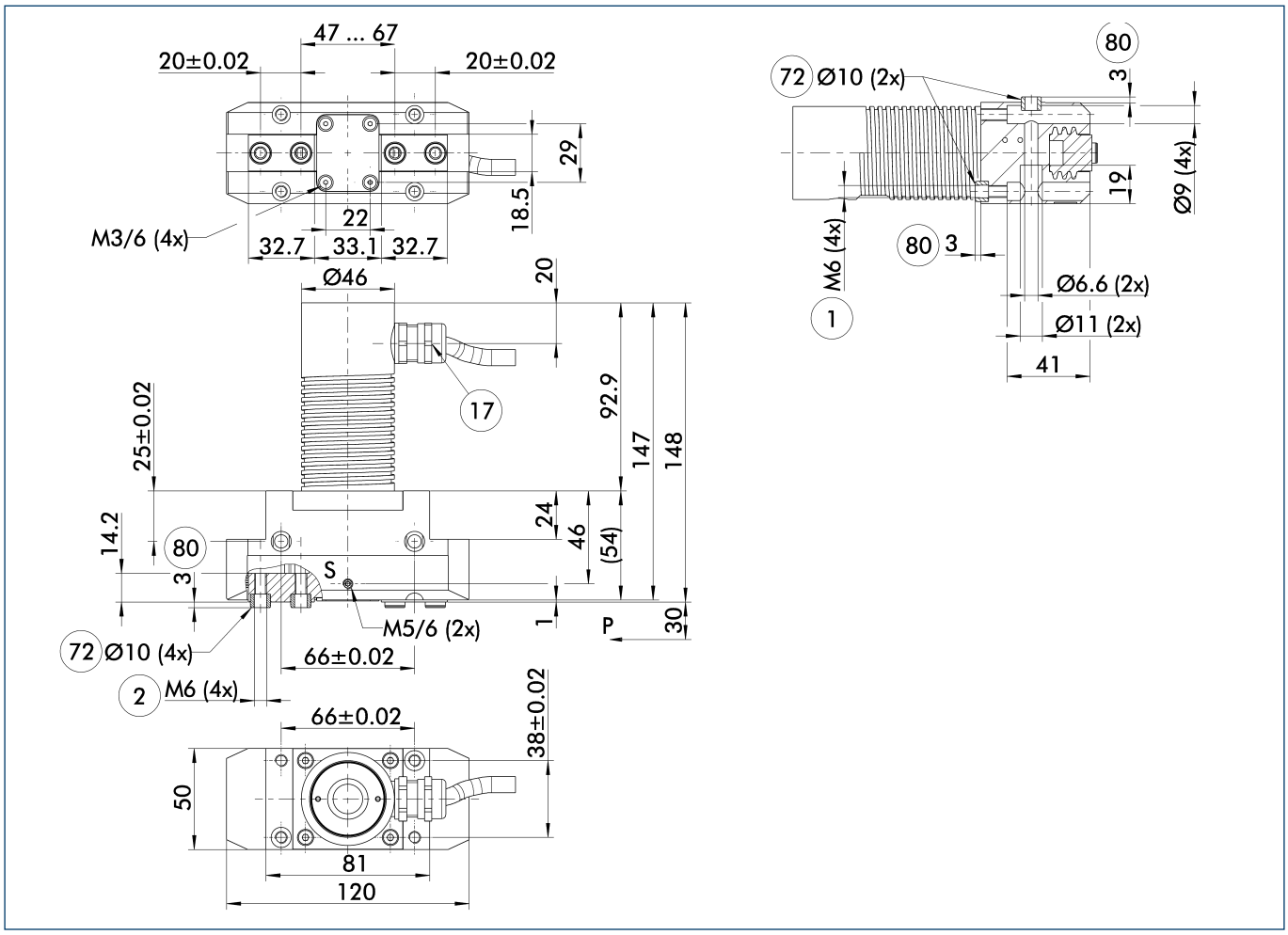

The drawing shows the gripper in the basic version with closed jaws, without dimensional consideration of the options described below.

1. Gripper connection
2. Finger connection
17. Cable outlet
72. Fit for centering sleeves
80. Depth of the centering sleeve hole in the mating part
S Air purge connection (0.5 ... 1 bar)

Maximum permitted finger projection

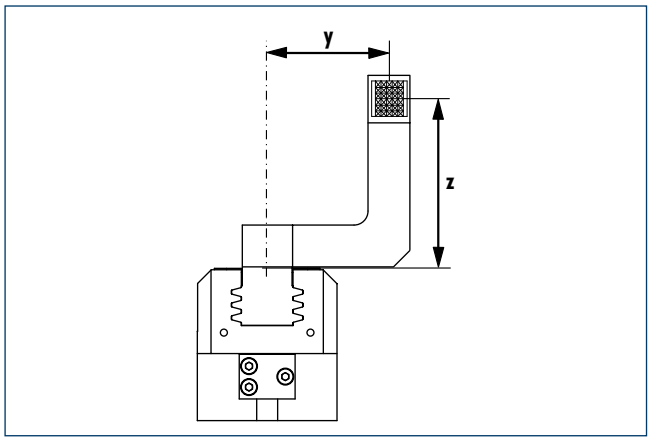

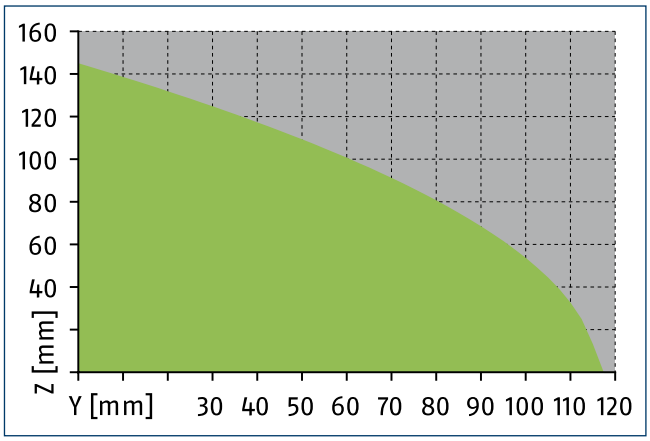

Permitted range Inadmissible range

The curve applies for the base version (Stroke -1). For other versions, the curve must be offset in parallel corresponding to the max. permissible finger length.

Plug version

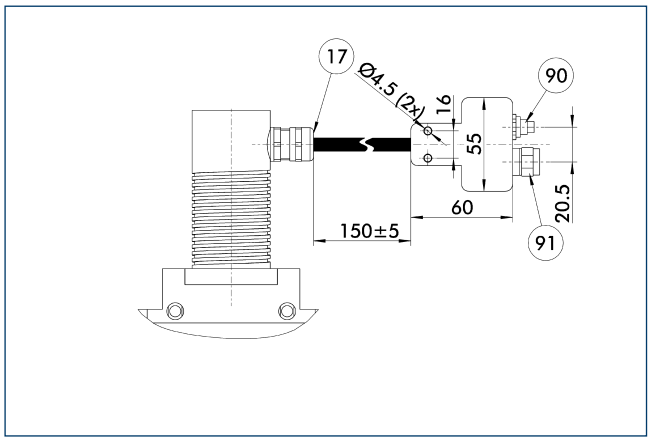

(17) Cable outlet
(90) Sensor plug (M12) for sensor cable
(91) Motor plug (M17) for power cable

The drawing shows the plug version. It comprises a Y-plug and approximately 15 cm of cable between the module and plug.

Dust-tight version

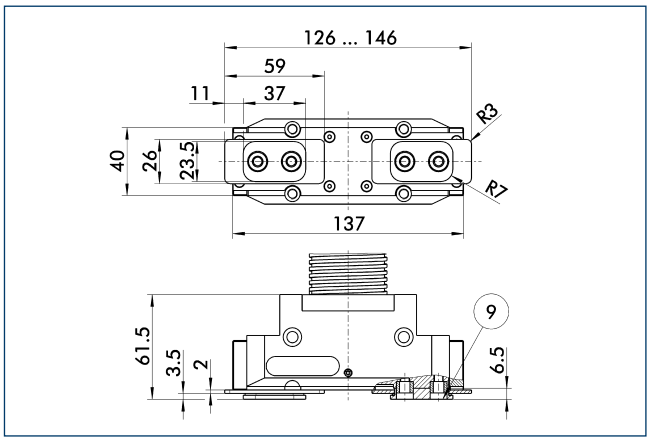

(9) For mounting screw connection diagram, see basic version

The dust-tight variant increases the tightness from IP40 to IP64 with the additional cover plate.

BSWS jaw quick-change systems

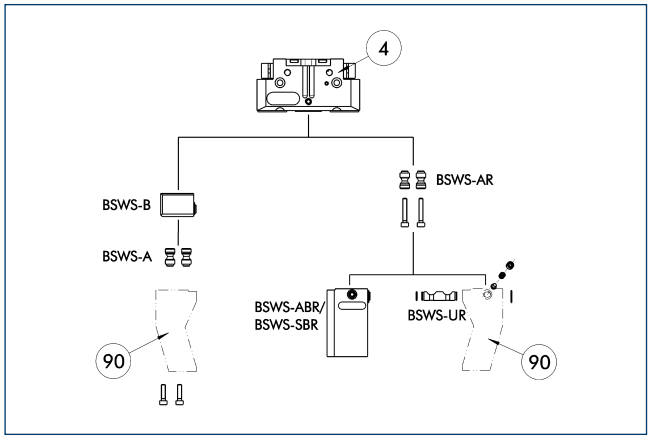

(4) Gripper
(90) Customized gripper fingers

There are various jaw quick-change systems available for the grippers. For detailed information, refer to the appropriate product.

Description	ID	
Jaw quick-change system adapter		
BSWS-AR 100	0300094	
BSWS-A 100	0303026	
Jaw quick-change system base		
BSWS-B 100	0303027	
Finger blanks with jaw quick-change system		
BSWS-ABR-PGZN-plus 100	0300074	
BSWS-SBR-PGZN-plus 100	0300084	
Jaw quick-change system reversed		
BSWS-UR 100	0302993	

ⓘ Only the systems listed in the table can be used.

HUE EGN 100 protective cover

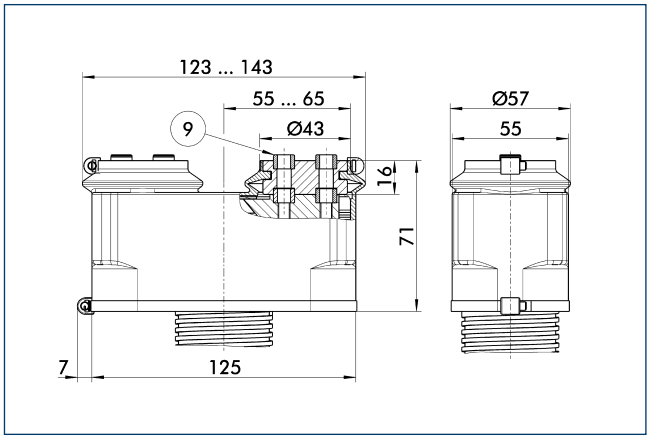

(9) For mounting screw connection diagram, see basic version

The HUE protective cover completely protects the gripper against external influences up to IP65 if an additional sealing of the cover bottom is provided as part of the application. The mounting diagram shifts by the height of the intermediate jaw.

Description	ID	IP class
Protection cover		
HUE EGN 100	0307041	65

ZBA L-plus 100 intermediate jaws

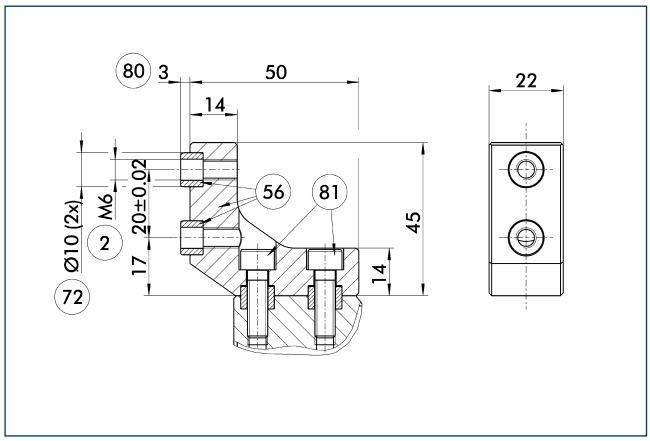

(2) Finger connection
(56) Included in delivery
(72) Fit for centering sleeves
(80) Depth of the centering sleeve hole in the mating part
(81) Not included in the scope of delivery

Optionally intermediate jaws can be used, enabling direct connection and alignment of top jaws and various standard accessories in Z-direction.

Description	ID	Material	Scope of delivery
Intermediate jaws			
ZBA-L-plus 100	0311742	Aluminum	1

ABR- / SBR-PGZN-plus 100 finger blanks

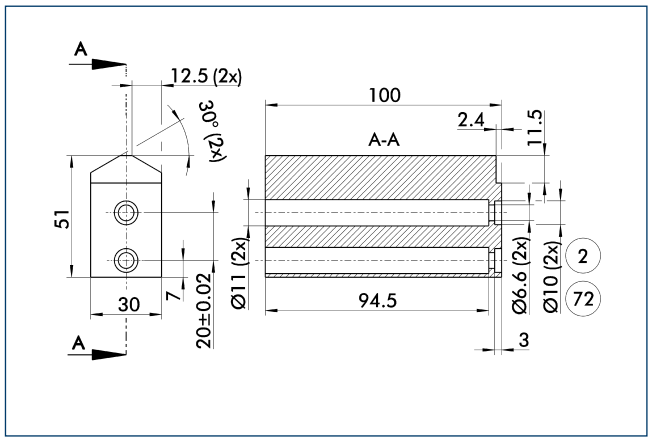

(2) Finger connection
(72) Fit for centering sleeves

Finger blanks for customized subsequent machining.

Description	ID	Material	Scope of delivery
Finger blanks			
ABR-PGZN-plus 100	0300012	Aluminum	1
SBR-PGZN-plus 100	0300022	16MnCr5	1

UZB 100 universal intermediate jaw

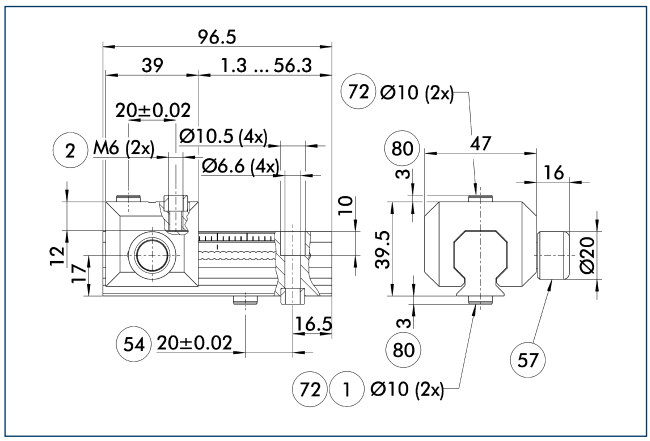

(1) Gripper connection
(2) Finger connection
(54) Optional right or left connection
(57) Locking
(72) Fit for centering sleeves
(80) Depth of the centering sleeve hole in the mating part

The universal intermediate jaw allows fast tool-free and reliable plugging and shifting of top jaws at the gripper.

Description	ID	Grid dimension [mm]
Universal intermediate jaw		
UZB 100	0300044	2.5
UZB-S 100	5518272	2.5
Finger blanks		
ABR-PGZN-plus 100	0300012	
SBR-PGZN-plus 100	0300022	

FMS-ZBA / ZBP 100 force-measuring jaws

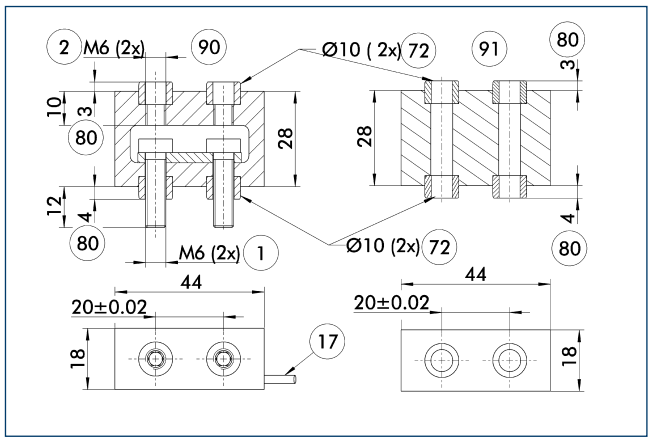

(1) Gripper connection
(2) Finger connection
(17) Cable outlet
(72) Fit for centering sleeves
(80) Depth of the centering sleeve hole in the mating part
(90) Active intermediate jaws
(91) Passive intermediate jaws

Force measuring jaws measure gripping forces, but can also determine workpiece weights or dimensional deviations. There are active and passive intermediate jaws (FMS-ZBA or FMS-ZBP). At least one active force measuring jaw is required per gripper, the rest can be passive. For each active jaw, a FMS-A control unit and a FMS-AK connection cable are required.

Description	ID	
Active intermediate jaws		
FMS-ZBA 100	0301836	
FMS-ZBP 100	0301837	
Electronic processor		
FMS-A1	0301810	

Power supply cable for SCHUNK ECM

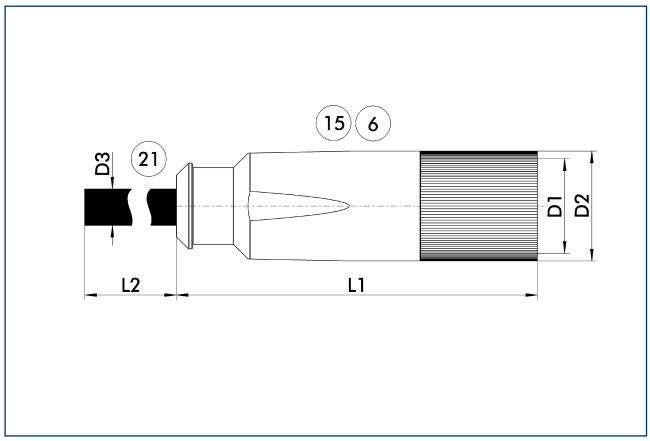

(6) Connection module side
(21) Connection controller side
(15) Socket

The power cables are supplied with open wires on the controller side for direct installation at the external ECM controller. The cables are available in robot-compatible (KAR) or drag chain compatible (KA) versions.

Description	ID	L_2 [m]	D_1
Power supply cable for SCHUNK ECM			
KA GLN1707-LK-00500-7	0306480	5	M17
KA GLN1707-LK-01000-7	0306481	10	M17
KA GLN1707-LK-01500-7	0306482	15	M17
KA GLN1707-LK-02000-7	0306483	20	M17
KAR GLN1707-LK-00500-7	0306485	5	M17
KAR GLN1707-LK-01000-7	0306486	10	M17
KAR GLN1707-LK-01500-7	0306487	15	M17
KAR GLN1707-LK-02000-7	0306488	20	M17

ⓘ Please observe the bending radius (7.5 times the cable diameter).

Sensor cable for SCHUNK ECM

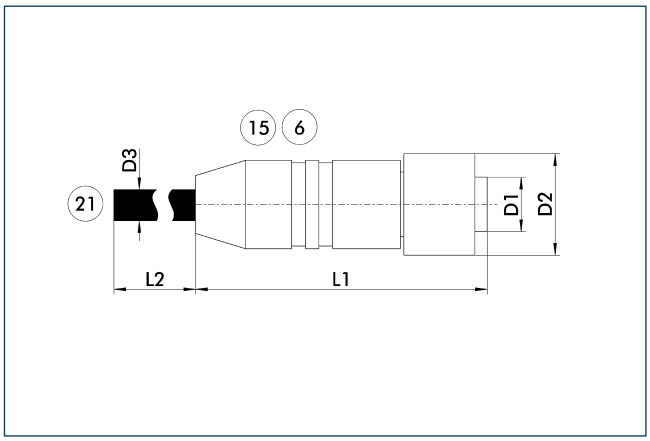

(6) Connection module side
(21) Connection controller side
(15) Socket

The sensor cables are supplied with pre-assembled plugs for direct assembly on the external ECM controller. The cables are available in robot-compatible (KAR) or drag chain compatible (KA) versions.

Description	ID	L_2 [m]	D_1
Sensor cable for SCHUNK ECM			
KA GLN1208-GK-00500-7	0306470	5	M12
KA GLN1208-GK-01000-7	0306471	10	M12
KA GLN0908-GK-01500-7	0306472	15	M12
KA GLN1208-GK-02000-7	0306473	20	M12
KAR GLN1208-GK-00500-7	0306475	5	M12
KAR GLN1208-GK-01000-7	0306476	10	M12
KAR GLN1208-GK-01500-7	0306477	15	M12
KAR GLN1208-GK-02000-7	0306478	20	M12

ⓘ Please observe the bending radius (7.5 times the cable diameter).

ECM motor controller

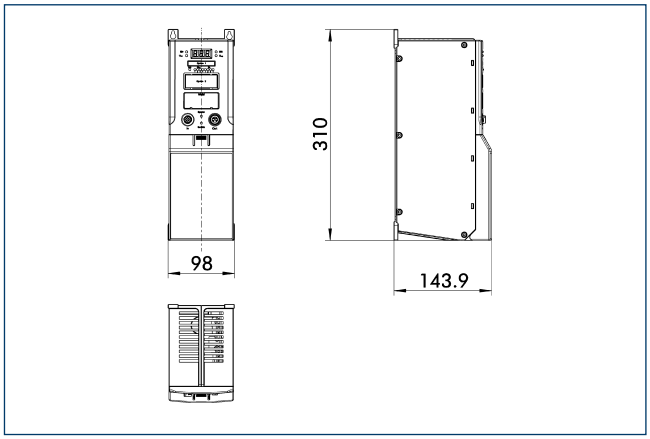

The ECM is required for operating the ERS rotary module (48 V) and the EGN and EZN electric grippers.

Description	
Controller	
ECM - EGN 100	

EGN 160

SCHUNK Grippers electric | 2-Finger Parallel Grippers | Universal Gripper

Gripping force

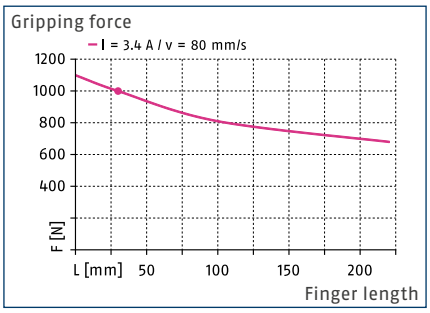

Speed

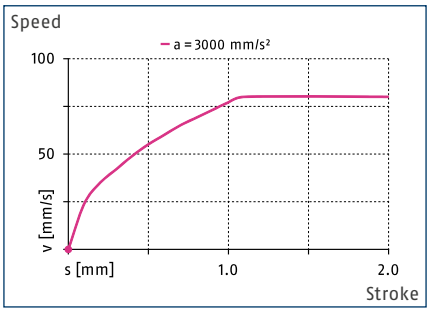

Finger load

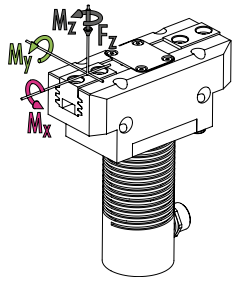

M_x max. 170.00 Nm
M_z max. 130.00 Nm
M_y max. 180.00 Nm
F_z max. 4300.00 N

ⓘ The specified torques and forces are static values, apply for each base jaw, and may occur simultaneously. M_y may occur in addition to the torque generated by the gripping force.

Technical data

Description		EGN 160	EGN 160-S
ID		0306103	0306106
General operating data			
Stroke per jaw	[mm]	16	16
min. / max. gripping force	[N]	250/1000	250/1000
Recommended workpiece weight	[kg]	5	5
max. permitted finger length	[mm]	200	200
max. permitted weight per finger	[kg]	3.5	3.5
Repeat accuracy	[mm]	±0.01	±0.01
Closing- / opening time	[s]	0.5/0.5	0.5/0.5
max. speed	[mm/s]	80	80
max. acceleration	[mm/s²]	3000	3000
Weight	[kg]	3	3
min. / max. ambient temperature	[°C]	5/55	5/55
IP class		41	41
Electrical operating data			
Controller electronics		external	external
Controller type		ECM-EGN160	ECM-EGN160
Nominal voltage	[V DC]	24	24
Nominal current	[A]	2.6	2.6
max. power supply	[A]	4	4
Communication interface		see ECM controller	see ECM controller
Options and their characteristics			
Dust-tight version		37306103	37306106
IP class		64	64
Weight	[kg]	3.4	3.4

ⓘ Plug version EGN-S is available for the ECM controller in addition to the standard variant with 5 m attached connection cable. The gripper has a 15 cm cable and stepped Y-plug in this version. Drag-chain-compatible or robot-compatible power and sensor cables are separately available.

Main view

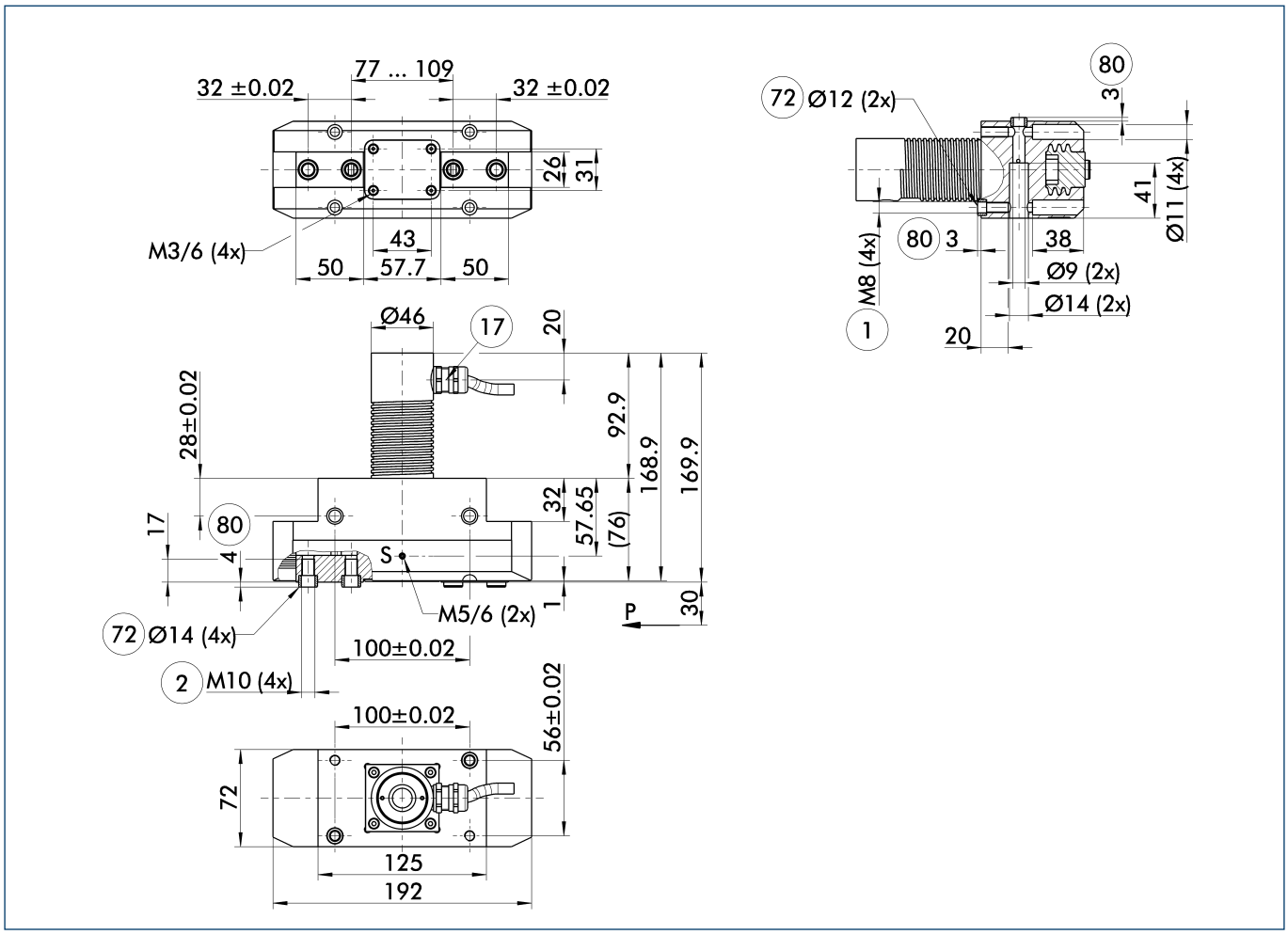

The drawing shows the gripper in the basic version with closed jaws, without dimensional consideration of the options described below.

- (1) Gripper connection
- (2) Finger connection
- (17) Cable outlet
- (72) Fit for centering sleeves
- (80) Depth of the centering sleeve hole in the mating part
- S Air purge connection (0.5 ... 1 bar)

Maximum permitted finger projection

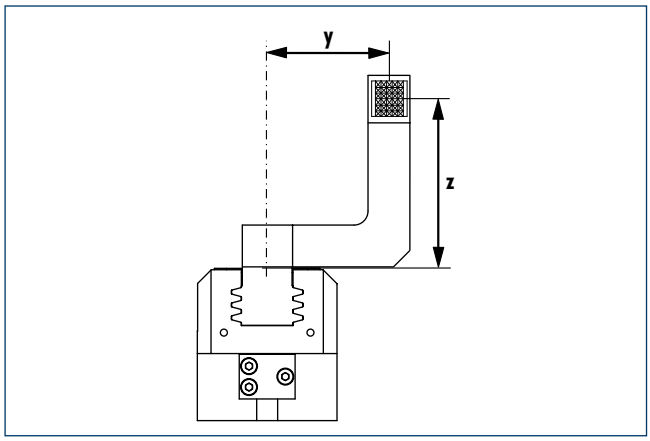

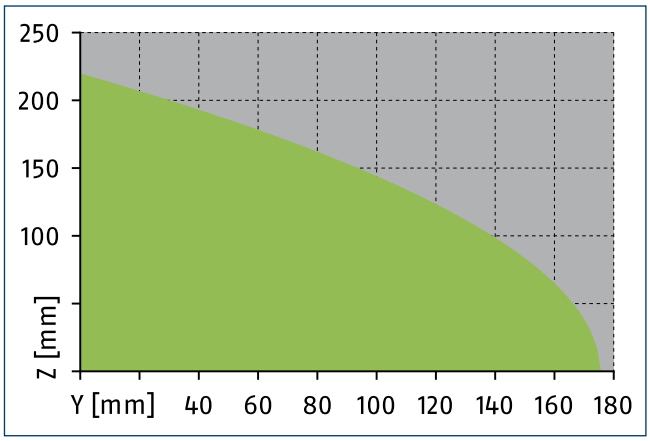

Permitted range Inadmissible range

The curve applies for the base version (Stroke -1). For other versions, the curve must be offset in parallel corresponding to the max. permissible finger length.

Plug version

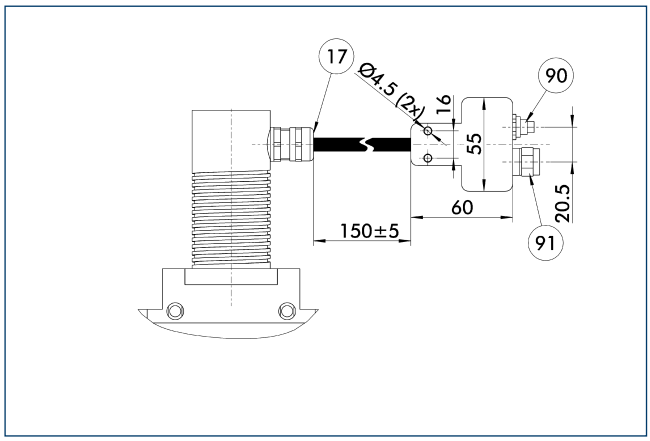

(17) Cable outlet
(90) Sensor plug (M12) for sensor cable
(91) Motor plug (M17) for power cable

The drawing shows the plug version. It comprises a Y-plug and approximately 15 cm of cable between the module and plug.

Dust-tight version

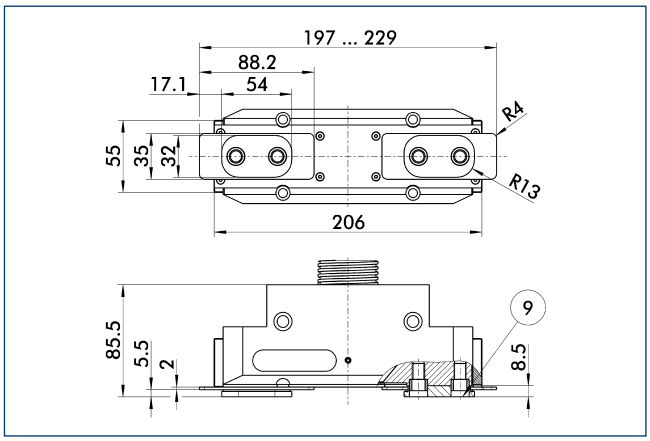

(9) For mounting screw connection diagram, see basic version

The dust-protection option increases the degree of protection against penetrating substances. The screw connection diagram shifts by the height of the intermediate jaw. The finger length is still measured from the upper edge of the gripper housing.

BSWS jaw quick-change systems

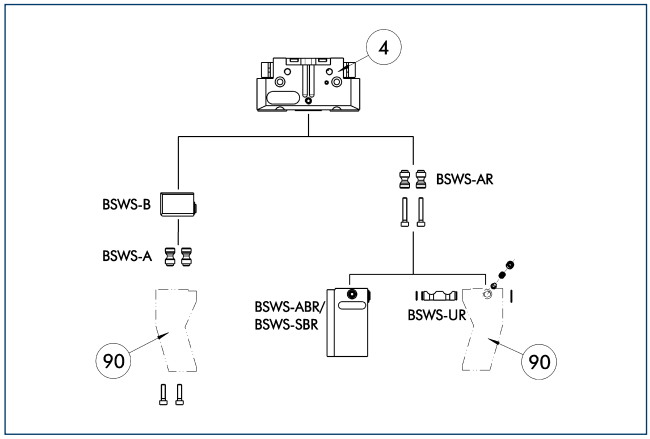

(4) Gripper
(90) Customized gripper fingers

There are various jaw quick-change systems available for the grippers. For detailed information, refer to the appropriate product.

Description	ID	
Jaw quick-change system adapter		
BSWS-AR 160	0300096	
BSWS-A 160	0303030	
Jaw quick-change system base		
BSWS-B 160	0303031	
Finger blanks with jaw quick-change system		
BSWS-ABR-PGZN-plus 160	0300076	
BSWS-SBR-PGZN-plus 160	0300086	
Jaw quick-change system reversed		
BSWS-UR 160	0302995	

ⓘ Only the systems listed in the table can be used.

HUE EGN 160 protective cover

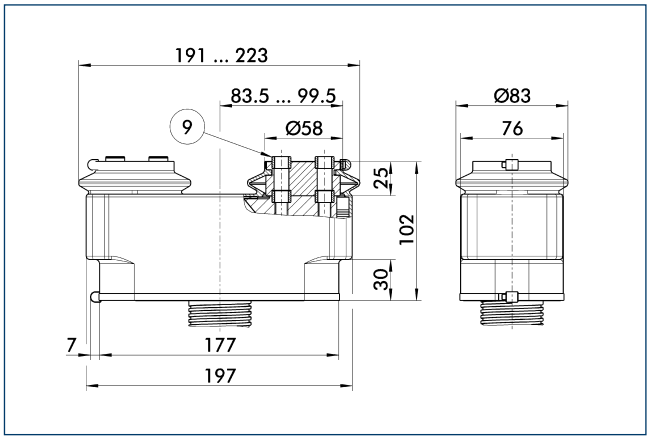

(9) For mounting screw connection diagram, see basic version

The HUE protective cover completely protects the gripper against external influences up to IP65 if an additional sealing of the cover bottom is provided as part of the application. The mounting diagram shifts by the height of the intermediate jaw.

Description	ID	IP class
Protection cover		
HUE EGN 160	0307042	65

ZBA L-plus 160 intermediate jaws

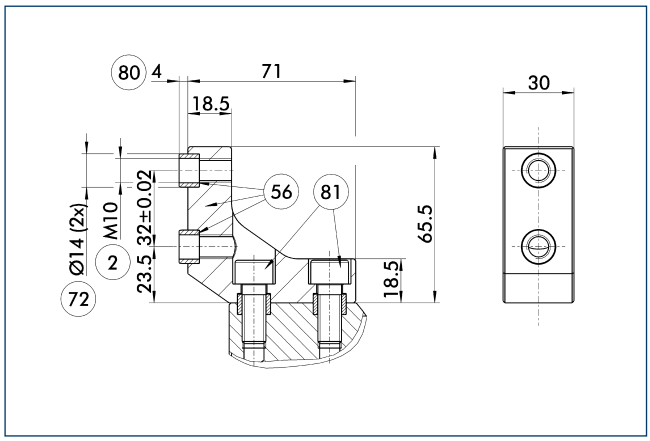

(2) Finger connection
(56) Included in delivery
(72) Fit for centering sleeves
(80) Depth of the centering sleeve hole in the mating part
(81) Not included in the scope of delivery

Optionally intermediate jaws can be used, enabling direct connection and alignment of top jaws and various standard accessories in Z-direction.

Description	ID	Material	Scope of delivery
Intermediate jaws			
ZBA-L-plus 160	0311762	Aluminum	1

ABR- / SBR-PGZN-plus 160 finger blanks

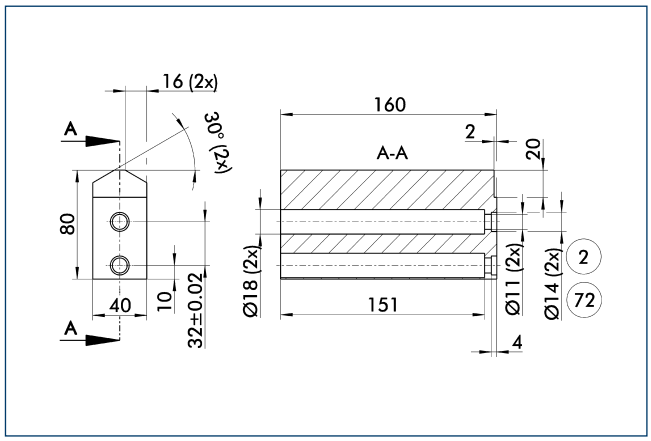

(2) Finger connection
(72) Fit for centering sleeves

Finger blanks for customized subsequent machining.

Description	ID	Material	Scope of delivery
Finger blanks			
ABR-PGZN-plus 160	0300014	Aluminum	1
SBR-PGZN-plus 160	0300024	16MnCr5	1

UZB 160 universal intermediate jaw

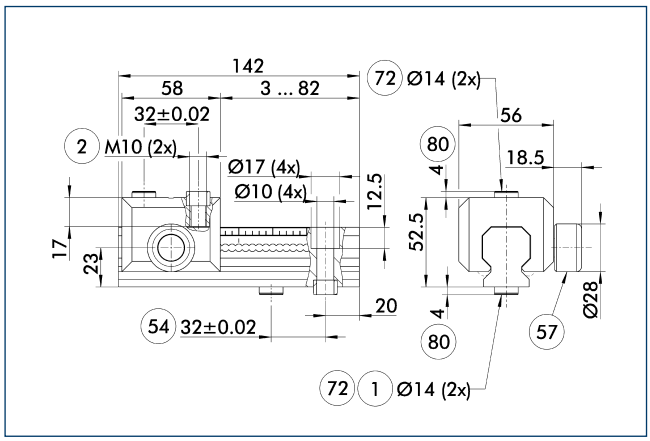

(1) Gripper connection
(2) Finger connection
(54) Optional right or left connection
(57) Locking
(72) Fit for centering sleeves
(80) Depth of the centering sleeve hole in the mating part

The universal intermediate jaw allows fast tool-free and reliable plugging and shifting of top jaws at the gripper.

Description	ID	Grid dimension [mm]
Universal intermediate jaw		
UZB 160	0300046	4
UZB-S 160	5518274	4
Finger blanks		
ABR-PGZN-plus 160	0300014	
SBR-PGZN-plus 160	0300024	

FMS-ZBA / ZBP 160 force-measuring jaws

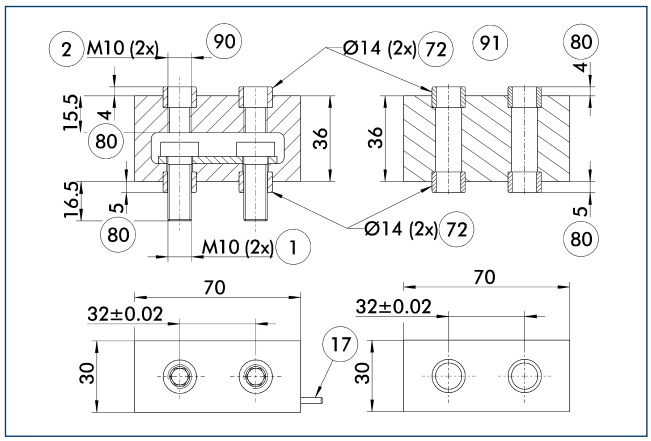

(1) Gripper connection
(2) Finger connection
(17) Cable outlet
(72) Fit for centering sleeves
(80) Depth of the centering sleeve hole in the mating part
(90) Active intermediate jaws
(91) Passive intermediate jaws

Force measuring jaws measure gripping forces, but can also determine workpiece weights or dimensional deviations. There are active and passive intermediate jaws (FMS-ZBA or FMS-ZBP). At least one active force measuring jaw is required per gripper, the rest can be passive. For each active jaw, a FMS-A control unit and a FMS-AK connection cable are required.

Description	ID	
Active intermediate jaws		
FMS-ZBA 160	0301840	
FMS-ZBP 160	0301841	
Electronic processor		
FMS-A2	0301811	

Power supply cable for SCHUNK ECM

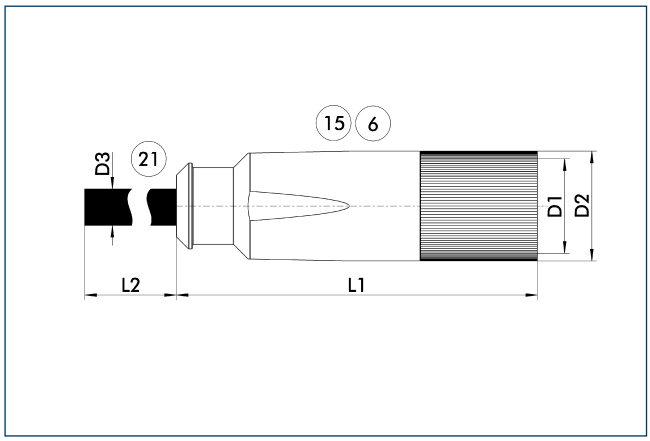

(6) Connection module side
(21) Connection controller side
(15) Socket

The power cables are supplied with open wires on the controller side for direct installation at the external ECM controller. The cables are available in robot-compatible (KAR) or drag chain compatible (KA) versions.

Description	ID	L_2 [m]	D_1
Power supply cable for SCHUNK ECM			
KA GLN1707-LK-00500-7	0306480	5	M17
KA GLN1707-LK-01000-7	0306481	10	M17
KA GLN1707-LK-01500-7	0306482	15	M17
KA GLN1707-LK-02000-7	0306483	20	M17
KAR GLN1707-LK-00500-7	0306485	5	M17
KAR GLN1707-LK-01000-7	0306486	10	M17
KAR GLN1707-LK-01500-7	0306487	15	M17
KAR GLN1707-LK-02000-7	0306488	20	M17

ⓘ Please observe the bending radius (7.5 times the cable diameter).

Sensor cable for SCHUNK ECM

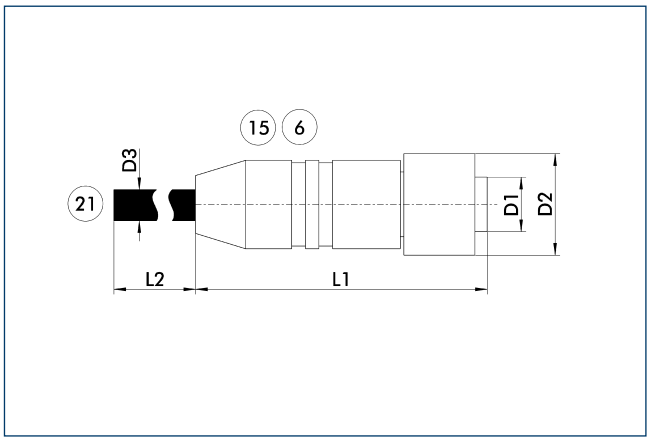

(6) Connection module side
(21) Connection controller side
(15) Socket

The sensor cables are supplied with pre-assembled plugs for direct assembly on the external ECM controller. The cables are available in robot-compatible (KAR) or drag chain compatible (KA) versions.

Description	ID	L_2 [m]	D_1
Sensor cable for SCHUNK ECM			
KA GLN1208-GK-00500-7	0306470	5	M12
KA GLN1208-GK-01000-7	0306471	10	M12
KA GLN0908-GK-01500-7	0306472	15	M12
KA GLN1208-GK-02000-7	0306473	20	M12
KAR GLN1208-GK-00500-7	0306475	5	M12
KAR GLN1208-GK-01000-7	0306476	10	M12
KAR GLN1208-GK-01500-7	0306477	15	M12
KAR GLN1208-GK-02000-7	0306478	20	M12

ⓘ Please observe the bending radius (7.5 times the cable diameter).

ECM motor controller

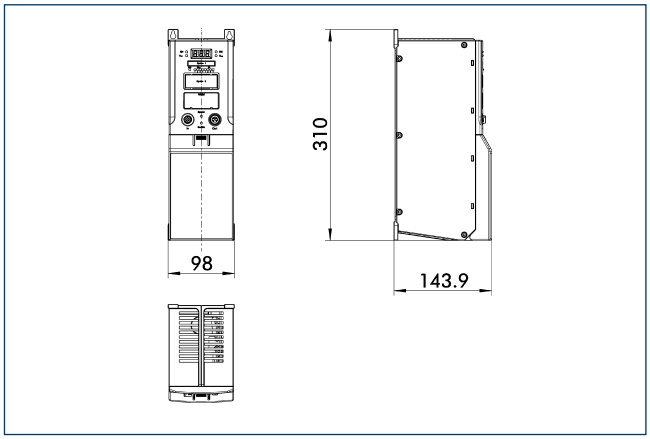

The ECM is required for operating the ERS rotary module (48 V) and the EGN and EZN electric grippers.

Description	
Controller	
ECM - EGN 160	

Smooth. Slim. Flexible.
EVG Universal Gripper

Servo-electric 2-finger parallel gripper with highly precise gripping force control and long stroke

Field of Application

All-purpose, ultra-flexible gripper for great part variety and sensitive components in clean environments

Advantages – Your benefit

Gripping force control in the range of 24 N – 57 N for the delicate gripping of sensitive workpieces

Large stroke of 50 mm for flexible workpiece handling

Pre-positioning capability to reduce cycle times through a short working stroke

With external electronics for simple integration into existing servo-controlled concepts via Profibus-DP, or CAN bus

Profiled rail guide for the precise handling of all kinds of workpieces

Sizes	Weight	Gripping force	Stroke per jaw	Workpiece weight
Quantity: 2	0.79 .. 1.1 kg	24 .. 57 N	20 .. 50 mm	0.12 .. 0.28 kg

Functional Description

The brushless servo motor drives the toothed belt drive via the bevel gear. The base jaws mounted on the profiled rail guides are connected to the toothed belt. The rotary movement is transferred into a linear movement of the base jaws via the gear and the toothed belt.

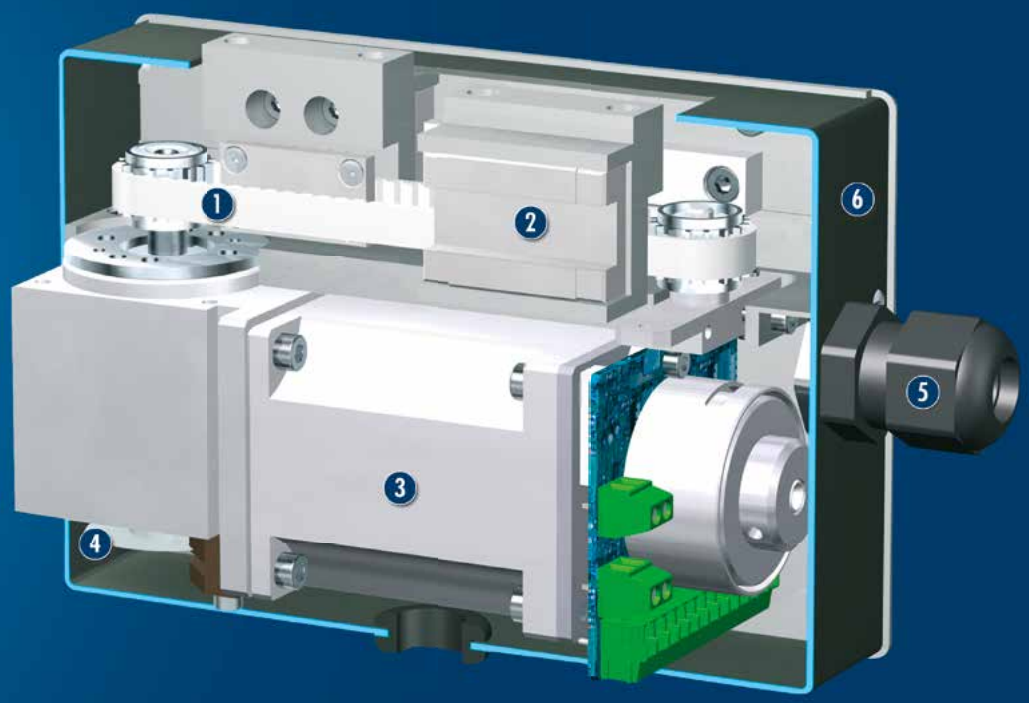

① **Kinematics**
Scope-free, robust toothed belt drive with steel reinforcement

② **Profiled rail guide**
for precise gripping with minimum play, smooth running gripping and low frictional loss

③ **Drive**
Brushless DC servo motor with hall sensor and bevel gear, incl. holding brake (only stroke variant 100)

④ **Encoder**
for gripper positioning and position evaluation

⑤ **Cable outlet**
with connection cable to MCS-06 controller

⑥ **Housing**
Weight-optimized through application of high-strength aluminum alloy

CAD data, operating manuals and other current product documents are available at **www.schunk.com**

General Notes about the Series

Operating principle: belt drive

Housing material: Aluminum alloy, coated

Base jaw material: Aluminum alloy, anodized

Actuation: servo-electric, via brushless DC servomotor

Warranty: 24 months (details, general terms and conditions and operating manuals can be downloaded at www.schunk.com)

Scope of delivery: Enclosed pack with centering sleeve, assembly and operating manual with declaration of incorporation. An external MCS-06 controller is required for operation of the EVG gripper. The connection cable with a length of 3 metres is attached to the gripper. The controller is optionally available and not included in the scope of delivery.

Gripping force: is the arithmetic total of the gripping force applied to each gripper jaw at distance P (see illustration).

Finger length: is measured from the upper edge of the gripper housing in the direction of the main axis. The breach of the max. permitted finger length can bring higher abrasion.

Repeat accuracy: is defined as the spread of the limit position after 100 consecutive strokes.

Workpiece weight: is calculated for a force-fit connection with a coefficient of friction of 0.1 and a safety factor of 2 against slippage of the workpiece on acceleration due to gravity g. Considerably heavier workpiece weights are permitted with form-fit gripping.

Closing and opening times: Minimum closing and opening times are only the movement times of the base jaws at max. speed, max. acceleration without electrical restrictions (maximum current) and observance of the maximum permissible mass per finger.

Nominal currents: may be permanently applied. The information in the respective product documentation must be observed for all current levels beyond the rated current up to the maximum current.

Application example

Rotate-grip combination with two sensitive servo-electric parallel grippers for flexible handling of sensitive workpieces

1. PRH servo-electric Rotary Module
2. EVG servo-electric 2-Finger Parallel Gripper

SCHUNK offers more ...

The following components make the product EVG even more productive – the suitable addition for the highest functionality, flexibility, reliability, and controlled production.

Centering Sleeves

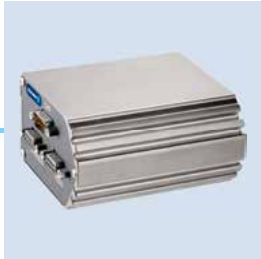

Control Unit

PG servo-electric 2-Finger Parallel Gripper

PR Rotary Unit electric

PRH Rotary Actuator

PW electrical Rotary Pan-tilt Actuator

PDU Rotary Unit electric

PSM servo-electric Drive

ERS Rotary Actuator

ⓘ Further information regarding the products can be found on the following product pages or at www.schunk.com. Please contact us for further information: SCHUNK technical hotline +49-7133-103-2696

Options and special Information

Control via external MCS-06 controller: The electrical control of the gripper takes place via the separately available MCS controller. Connection of the controller to the superordinate servo controlled concept can take place via Profibus or CAN bus. Both connection interfaces assure simple integration into the superordinate control system and enable the design of industrial bus topologies.

EVG 55-40

SCHUNK Grippers electric | 2-Finger Parallel Grippers | Universal Gripper

Gripping force

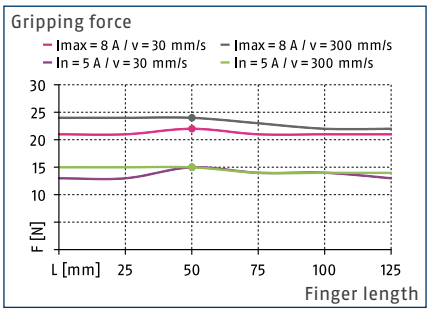

Speed

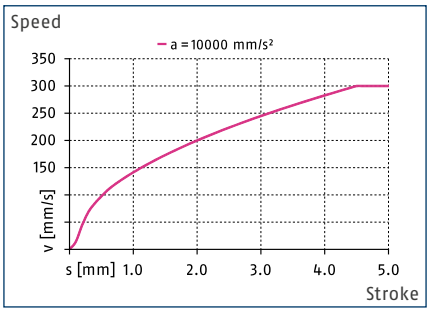

Finger load

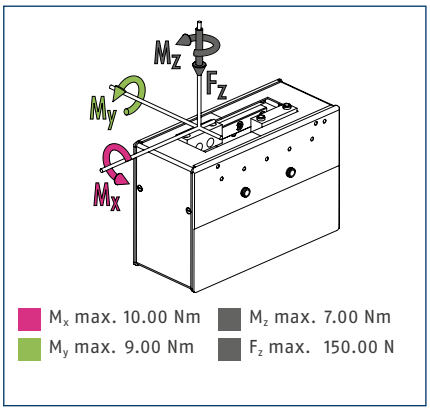

ⓘ The specified torques and forces are static values, apply for each base jaw, and may occur simultaneously. M_y may occur in addition to the torque generated by the gripping force.

Technical data

Description		EVG 55-40
ID		0306020
General operating data		
Stroke per jaw	[mm]	20
min. / max. gripping force	[N]	5/24
Recommended workpiece weight	[kg]	0.12
max. permitted finger length	[mm]	125
max. permitted weight per finger	[kg]	0.1
Repeat accuracy	[mm]	±0.05
Closing- / opening time	[s]	0.6/0.6
max. speed	[mm/s]	300
max. acceleration	[mm/s²]	10000
Weight	[kg]	0.79
min. / max. ambient temperature	[°C]	5/55
IP class		20
Electrical operating data		
Controller electronics		external
Controller type		MCS-06
Nominal voltage	[V DC]	24
Nominal current	[A]	5
max. power supply	[A]	8
Communication interface		see MCS controller

Main view

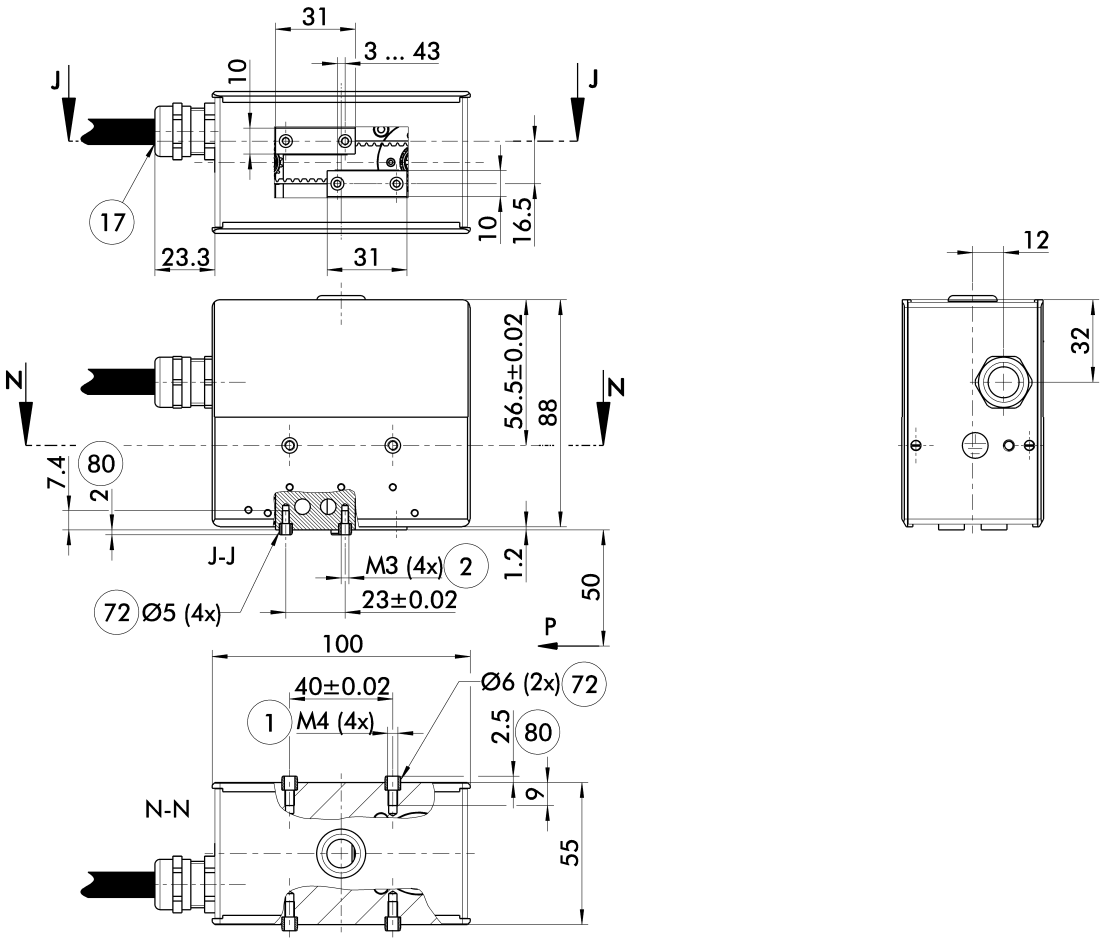

The drawing shows the basic version of the gripper with open jaws, without dimensional consideration of the options described below.

1. Gripper connection
2. Finger connection
17. Cable outlet
72. Fit for centering sleeves
80. Depth of the centering sleeve hole in the mating part

Maximum permitted finger projection

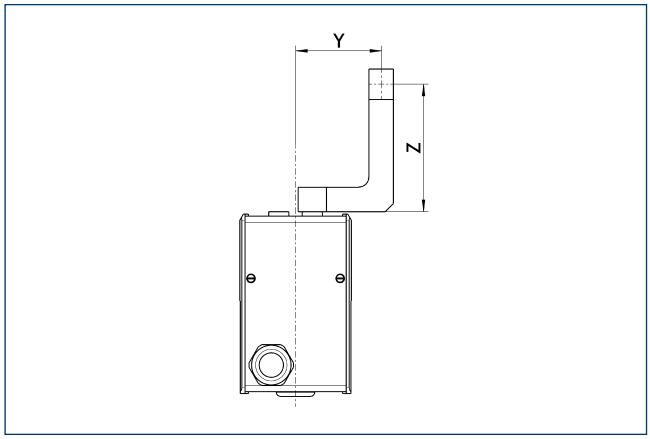

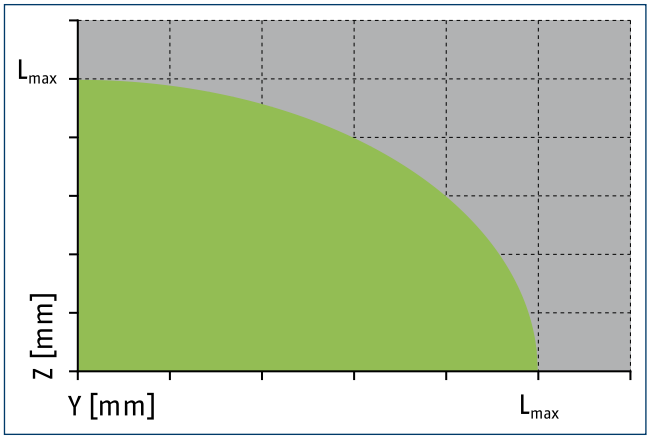

Permitted range

Inadmissible range

L_{max} is equivalent to the maximum permitted finger length, see the chart of technical specifications.

MCS motor controller

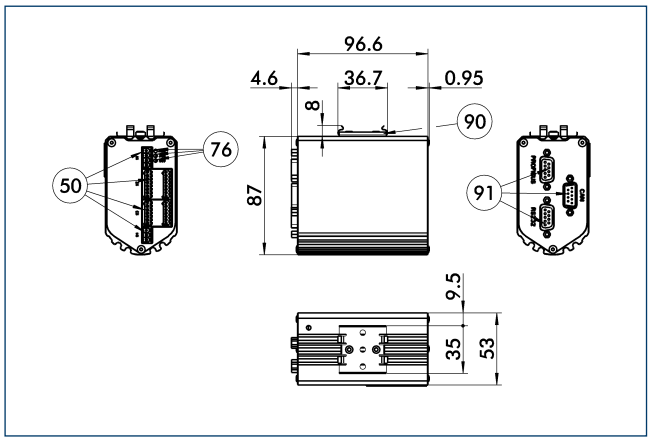

50 Electrical connection
76 LED
90 Spring clip for top-hat rail
91 Communication interface

The MCS-06 controller is matched to the gripper EVG and is preconfigured for it. The MCS-06 is equipped with communication interfaces Profibus and CAN bus. Moreover, a RS232 interface is available for further possibilities of parameterization.

Description	ID	
Motor controller		
MCS-06 (EVG55-040)	0306030	

EVG 55-100

SCHUNK Grippers electric | 2-Finger Parallel Grippers | Universal Gripper

Gripping force

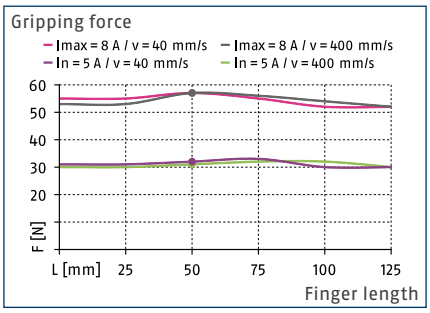

Speed

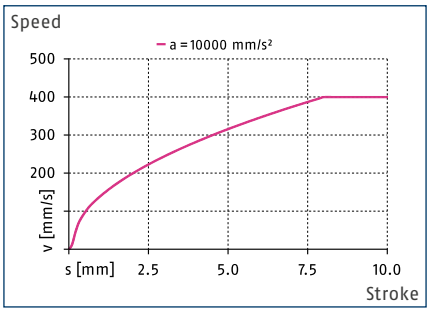

Finger load

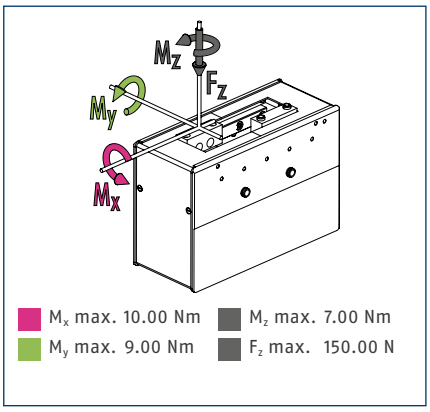

ⓘ The specified torques and forces are static values, apply for each base jaw, and may occur simultaneously. M_y may occur in addition to the torque generated by the gripping force.

Technical data

Description		EVG 55-100
ID		0306025
General operating data		
Stroke per jaw	[mm]	50
min. / max. gripping force	[N]	5/57
Recommended workpiece weight	[kg]	0.28
max. permitted finger length	[mm]	125
max. permitted weight per finger	[kg]	0.1
Repeat accuracy	[mm]	±0.05
Closing- / opening time	[s]	1.5/1.5
max. speed	[mm/s]	400
max. acceleration	[mm/s²]	10000
Weight	[kg]	1.1
min. / max. ambient temperature	[°C]	5/55
IP class		20
Electrical operating data		
Controller electronics		external
Controller type		MCS-06
Nominal voltage	[V DC]	24
Nominal current	[A]	5
max. power supply	[A]	8
Communication interface		see MCS controller

Main view

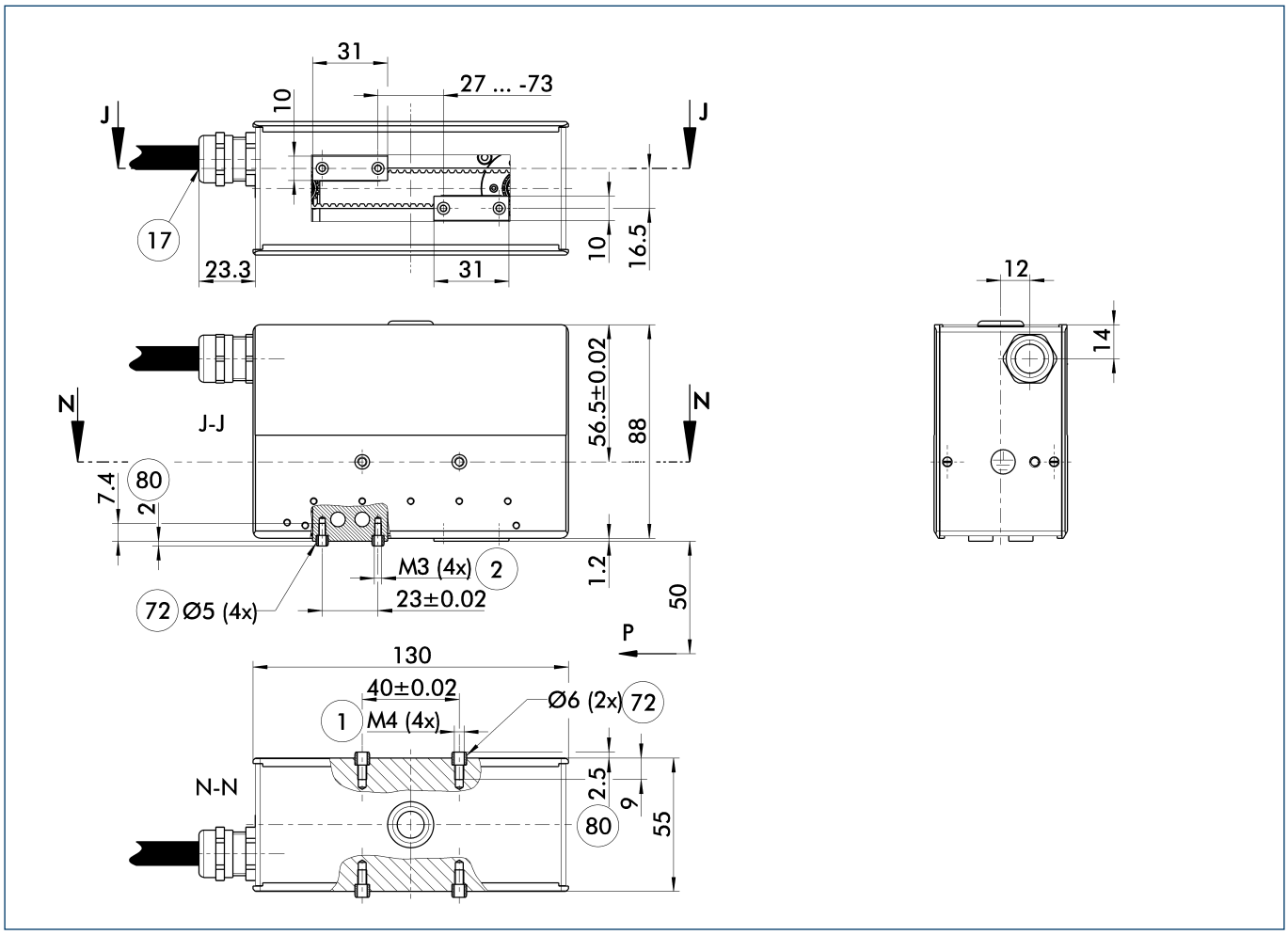

The drawing shows the basic version of the gripper with open jaws, without dimensional consideration of the options described below.

1. Gripper connection
2. Finger connection
17. Cable outlet
72. Fit for centering sleeves
80. Depth of the centering sleeve hole in the mating part

Maximum permitted finger projection

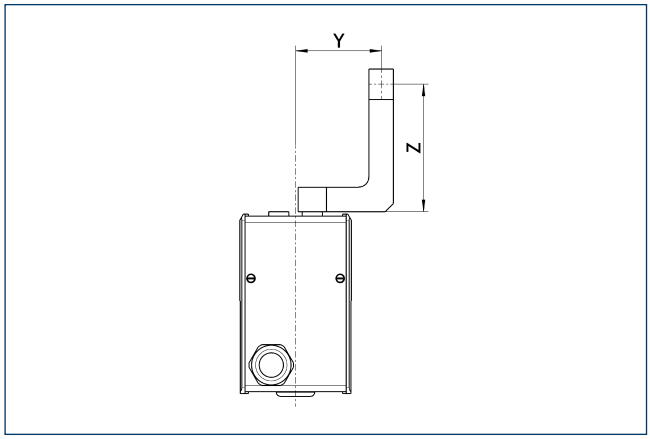

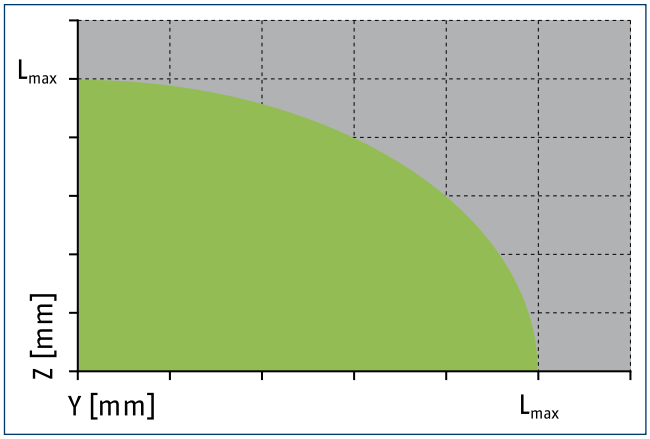

Permitted range

Inadmissible range

L_{max} is equivalent to the maximum permitted finger length, see the chart of technical specifications.

MCS motor controller

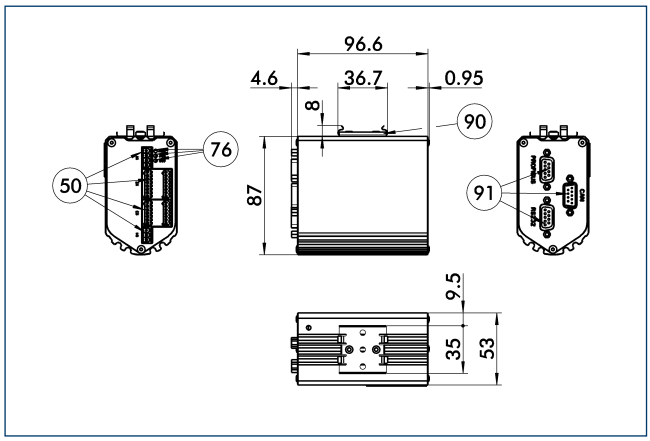

50 Electrical connection
76 LED
90 Spring clip for top-hat rail
91 Communication interface

The MCS-06 controller is matched to the gripper EVG and is preconfigured for it. The MCS-06 is equipped with communication interfaces Profibus and CAN bus. Moreover, a RS232 interface is available for further possibilities of parameterization.

Description	ID	
Motor controller		
MCS-06 (EVG55-100)	0306031	

Bus Capable. Compact. Flexible.
WSG Intelligent Gripper

Servo-electric 2-finger parallel gripper with highly precise gripping force control and long stroke

Field of Application

All-purpose, ultra-flexible gripper for great part variety and sensitive components in clean environments

Advantages – Your benefit

Gripping force control for the delicate gripping of sensitive workpieces

Large stroke for flexible workpiece handling

Fully integrated control and power electronics for creating a decentralized control system

Versatile actuation options for simple integration into existing servo-controlled concepts via Ethernet TCP/IP, Profibus-DP, Profinet or CAN bus

Integrated plug connector in the base jaw for connection of the optionally available attachment fingers with integrated strain gauges for direct internal force regulation

Integrated web server for configuration and diagnostics with any standard web browser

Integrated memory card for storage of parameters, documentation, and value adoption for gripper exchange, available for sizes 32 and 50

Sizes	Weight	Gripping force	Stroke per jaw	Workpiece weight
Quantity: 3	0.32 .. 1.6 kg	20 .. 80 N	32 .. 105 mm	0.1 .. 0.4 kg

Functional Description

The brushless servo motor drives the toothed belt drive via the bevel gear. The base jaws mounted on the profiled rail guides are connected to the toothed belt. The rotary movement is transferred into a linear movement of the base jaws via the gear and the toothed belt.

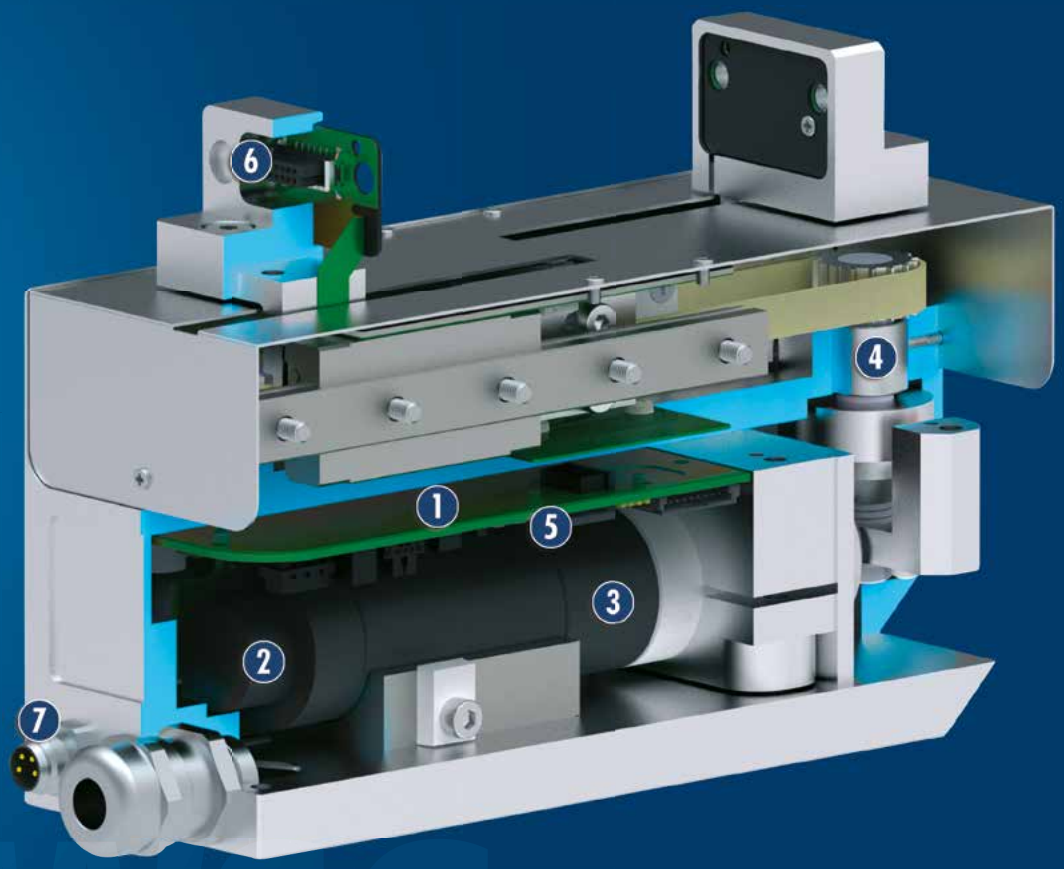

① **Integrated electronics**
Integrated control and power electronics for decentralized actuation of the servomotor

② **Encoder**
for gripper positioning and position evaluation

③ **Drive**
DC servomotor

④ **Belt drive**
Force transmission from the servo motor to the drive belt

⑤ **Micro SD card**
for storing of documentation and parameters

⑥ **Integrated plug connector**
for connection of attachment fingers with integrated sensors

⑦ **Electrical connection**
for connection of power supply and communication

CAD data, operating manuals and other current product documents are available at **www.schunk.com**

General Notes about the Series

Operating principle: Linear guidance with belt drive

Housing material: Aluminum alloy, coated

Base jaw material: Aluminum alloy, anodized

Warranty: 24 months (details, general terms and conditions and operating manuals can be downloaded at www.schunk.com)

Scope of delivery: DVD with assembly and operating manual with declaration of incorporation. A hybrid cable with connection to the WSG for size 25, the other end has open wires for voltage supply and RJ45 plug for Ethernet communication. A memory card (integrated) for sizes 32 and 50 and a programming cable with RJ45 plug. A power cable is required for the voltage supply for operation of the gripper in sizes 32 and 50. This is not included in the scope of delivery and must be ordered separately.

Gripping force: is the arithmetic total of the gripping force applied to each gripper jaw at distance P (see illustration).

Finger length: is measured from the upper edge of the gripper housing in the direction of the main axis. The breach of the max. permitted finger length can bring higher abrasion.

Repeat accuracy: is defined as the spread of the limit position after 100 consecutive strokes.

Workpiece weight: is calculated for a force-fit connection with a coefficient of friction of 0.1 and a safety factor of 2 against slippage of the workpiece on acceleration due to gravity g. Considerably heavier workpiece weights are permitted with form-fit gripping.

Closing and opening times: Minimum closing and opening times are only the movement times of the base jaws at max. speed, max. acceleration without electrical restrictions (maximum current) and observance of the maximum permissible mass per finger.

Nominal currents: may be permanently applied. The information in the respective product documentation must be observed for all current levels beyond the rated current up to the maximum current.

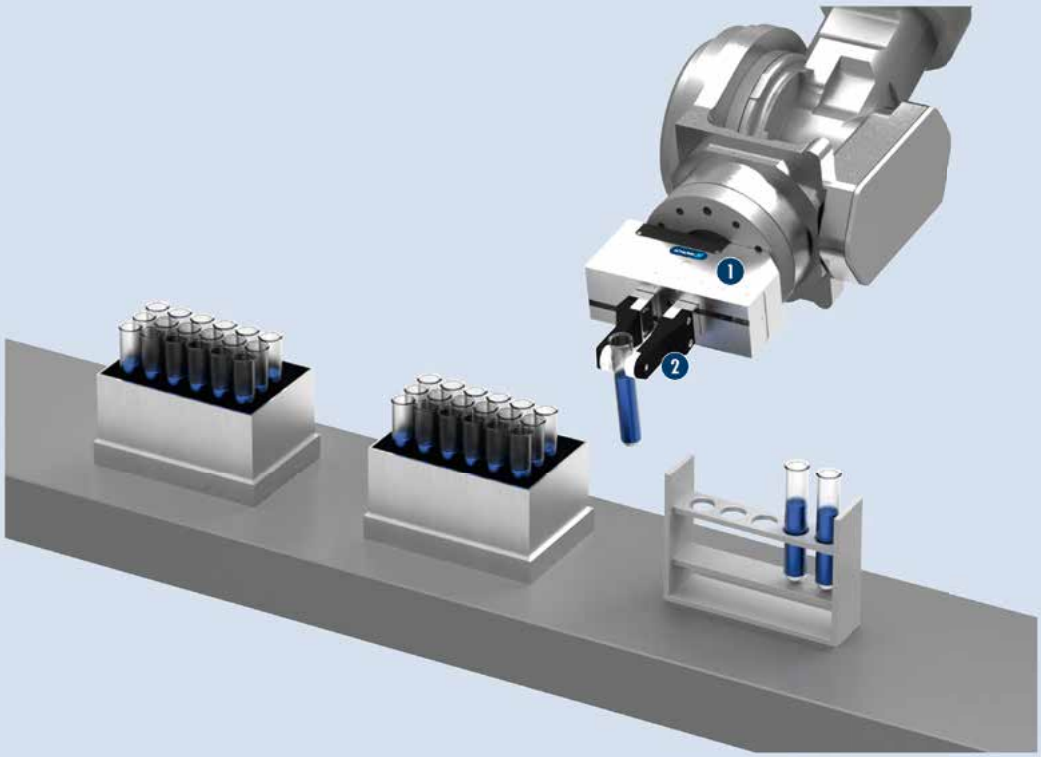

Application example

Robot for flexible loading and unloading of sensitive workpieces

1. WSG servo-electric 2-Finger Parallel Gripper
2. Finger with integrated sensor electronics

SCHUNK offers more ...

The following components make the product WSG even more productive – the suitable addition for the highest functionality, flexibility, reliability, and controlled production.

Fingers

Power- / and Data Cable

Centering Sleeves

ⓘ Further information regarding the products can be found on the following product pages or at www.schunk.com. Please contact us for further information: SCHUNK technical hotline +49-7133-103-2696

Options and special Information

Integrated electronics: The WSG gripper is electrically actuated by the fully integrated control and power electronics. Hence, the module does not require any additional external control units.
Versatile actuation options: Various interfaces such as Ethernet TCP/IP, Profibus-DP, CAN bus, or Profinet are available as communication types for sizes 32 and 50. This enables the setup of industrial bus networks as well as easy integration in existing control concepts. We offer various cables for transmission of supply voltage and data communication.

WSG 25

SCHUNK Grippers electric | 2-Finger Parallel Grippers | Intelligent Gripper

Gripping force, O.D. gripping

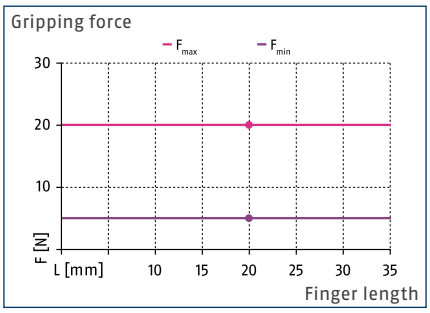

Speed

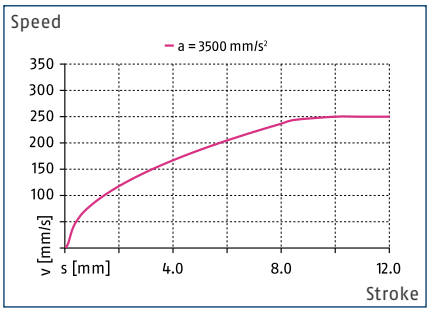

Finger load

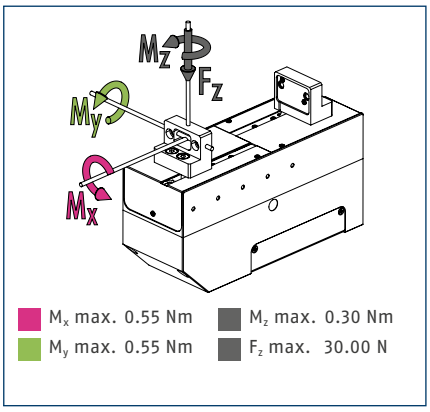

ⓘ The specified torques and forces are static values, apply for each base jaw, and may occur simultaneously. M_y may occur in addition to the torque generated by the gripping force.

Technical data

Description		WSG 25-64-B
ID		0306170
General operating data		
Stroke per jaw	[mm]	32
min. / max. gripping force	[N]	5/20
Recommended workpiece weight	[kg]	0.1
max. permitted finger length	[mm]	40
max. permitted weight per finger	[kg]	0.022
Repeat accuracy	[mm]	±0.03
max. speed	[mm/s]	250
max. acceleration	[mm/s²]	3500
Weight	[kg]	0.32
min. / max. ambient temperature	[°C]	5/50
IP class		20
Electrical operating data		
Controller electronics		integrated
Nominal voltage	[V DC]	24
Nominal current	[A]	0.3
max. power supply	[A]	0.7
Communication interface		Ethernet TCP/IP
Parametrized interface		Ethernet TCP/IP

Main view

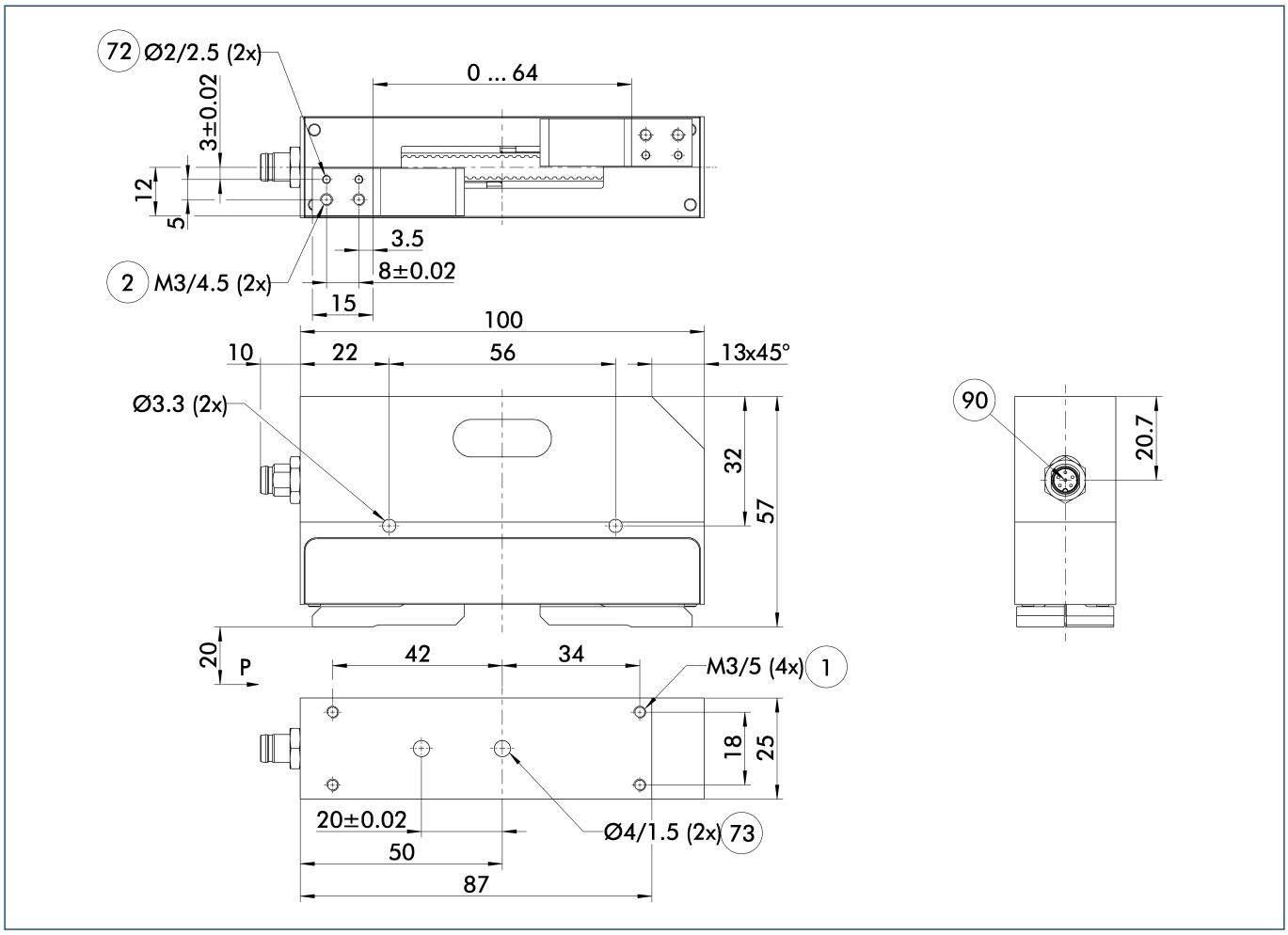

The drawing shows the basic version of the gripper with open jaws, without dimensional consideration of the options described below.

1. Gripper connection
2. Finger connection
72. Fit for centering sleeves
73. Fit for centering pins
90. Connection power supply and communication

Maximum permitted finger projection

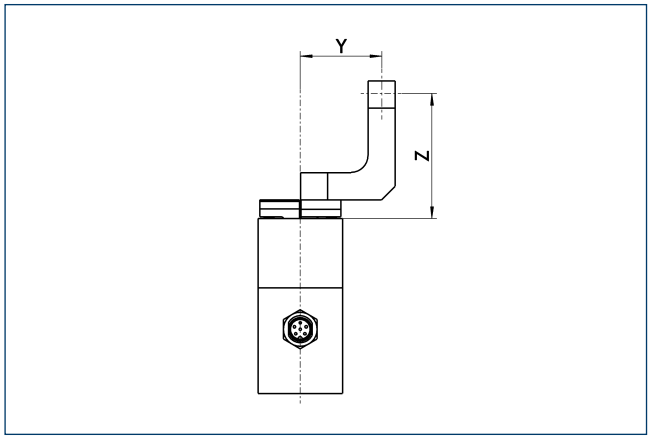

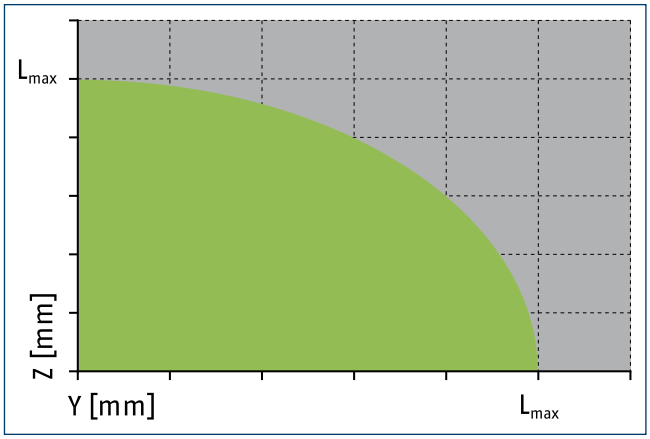

Permitted range

Inadmissible range

L_{max} is equivalent to the maximum permitted finger length, see the chart of technical specifications.

WSG 32

SCHUNK Grippers electric | 2-Finger Parallel Grippers | Intelligent Gripper

Gripping force, O.D. gripping

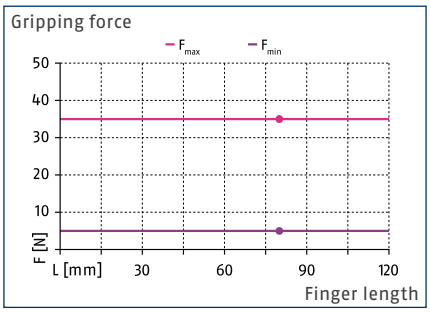

Speed

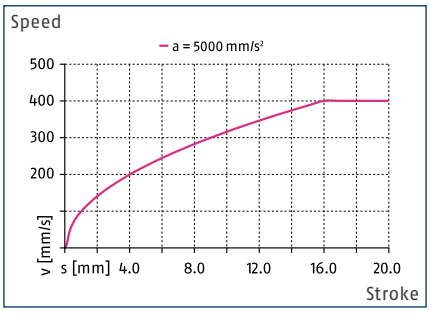

Finger load

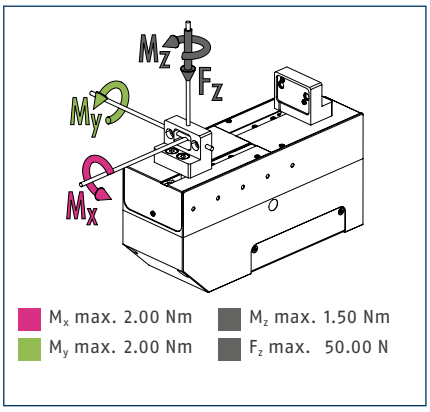

ⓘ The specified torques and forces are static values, apply for each base jaw, and may occur simultaneously. M_y may occur in addition to the torque generated by the gripping force.

Technical data

Description		WSG 032-068-B	WSG 032-068-C	WSG 032-068-P
ID		0306130	0306131	0306132
General operating data				
Stroke per jaw	[mm]	34	34	34
min. / max. gripping force	[N]	5/35	5/35	5/35
Recommended workpiece weight	[kg]	0.175	0.175	0.175
max. permitted finger length	[mm]	120	120	120
max. permitted weight per finger	[kg]	0.1	0.1	0.1
Repeat accuracy	[mm]	±0.03	±0.03	±0.03
max. speed	[mm/s]	400	400	400
max. acceleration	[mm/s²]	5000	5000	5000
Weight	[kg]	0.55	0.55	0.55
min. / max. ambient temperature	[°C]	5/50	5/50	5/50
IP class		40	40	40
Electrical operating data				
Controller electronics		integrated	integrated	integrated
Nominal voltage	[V DC]	24	24	24
Nominal current	[A]	0.75	0.75	0.75
max. power supply	[A]	1.6	1.6	1.6
Communication interface		Ethernet TCP/IP	Ethernet TCP/IP, CAN bus	Ethernet TCP/IP, Profinet
CAN interface	[Mbit/s]		1	
Parametrized interface		Ethernet TCP/IP	Ethernet TCP/IP	Ethernet TCP/IP

Main view

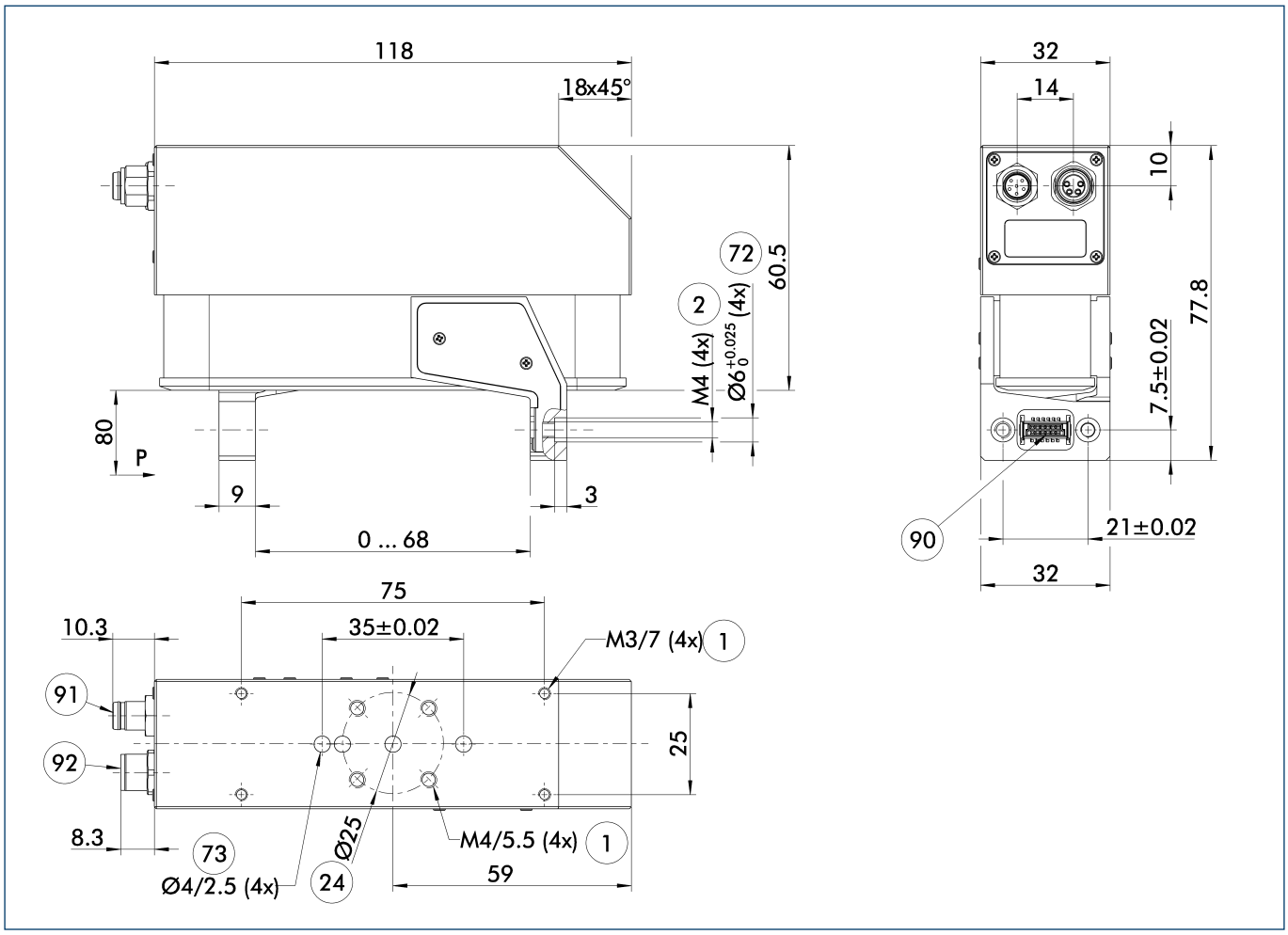

The drawing shows the basic version of the gripper with open jaws, without dimensional consideration of the options described below.

1. Gripper connection
2. Finger connection
24. Bolt circle
72. Fit for centering sleeves
73. Fit for centering pins
90. Integrated connector for top jaw
91. Voltage supply connection and CAN bus communication (optional)
92. Ethernet communication connection (optionally Profinet)

Maximum permitted finger projection

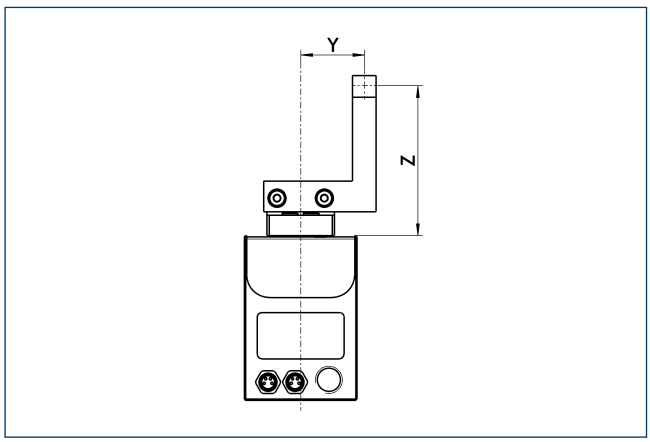

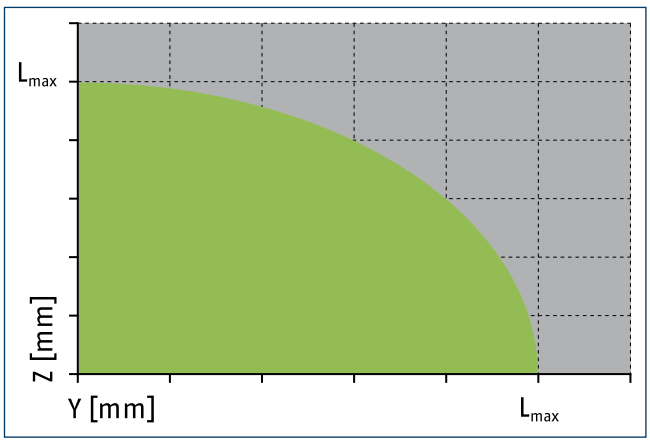

Permitted range

Inadmissible range

L_{max} is equivalent to the maximum permitted finger length, see the chart of technical specifications.

Attachment fingers for WSG

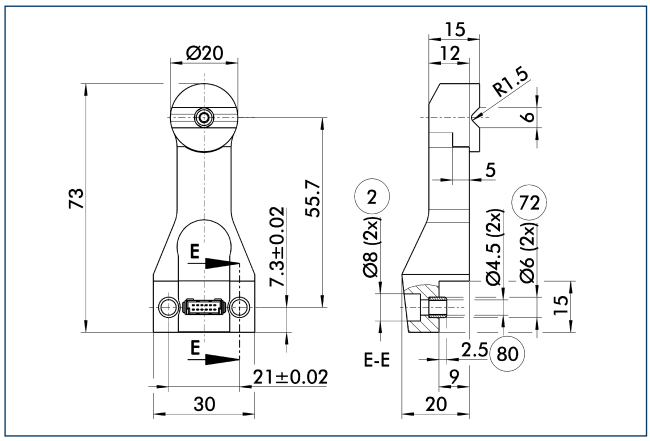

(2) Finger connection
(72) Fit for centering sleeves
(80) Depth of the centering sleeve hole in the mating part

The attachment fingers are optionally available with (DV) or without (GV) integrated strain gauges. The plastic insert can be reworked or exchanged for customized requirement. Fastening screws and centring sleeves are included in the scope of delivery.

Description	ID	Material	Scope of delivery
Finger			
ABF WSG32/50-DV	0306160	Aluminum	1
ABF WSG32/50-GV	0306150	Aluminum	1

ⓘ With operation of the WSG with the ABF attachment fingers, two pieces are normally required, optionally with or without integrated strain gauges.

Cable connector / cable extension

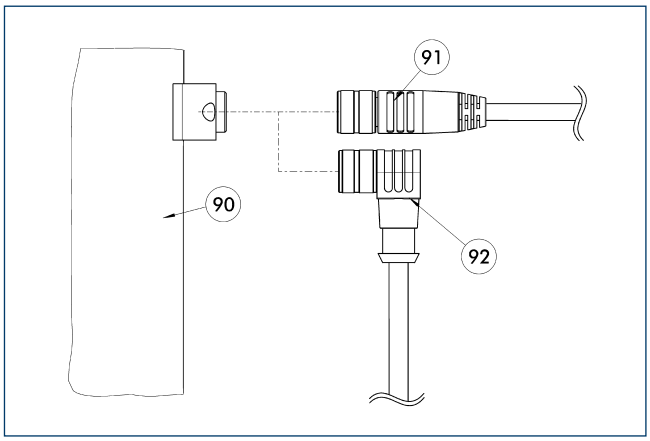

(90) Connecting point for component
(91) Cable with straight connection
(92) Cable with angular connection

Description	ID	L_2 [m]
Connection cables		
KA GLN0806-LK-00500-A	0307787	5
KA WLN0806-LK-00500-A	0307785	5

ⓘ BG stands for a connection cable with a straight female connector and BW for an angled female connector.

WSG 50

SCHUNK Grippers electric | 2-Finger Parallel Grippers | Intelligent Gripper

Gripping force

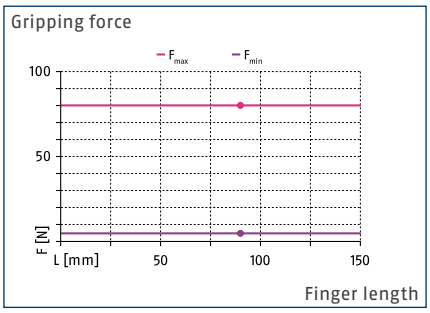

Speed

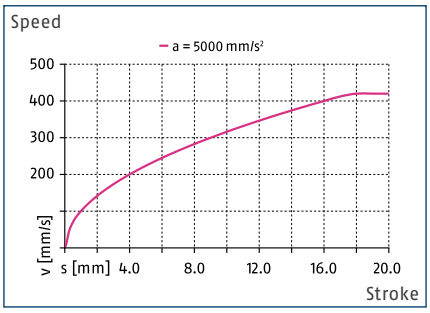

Finger load

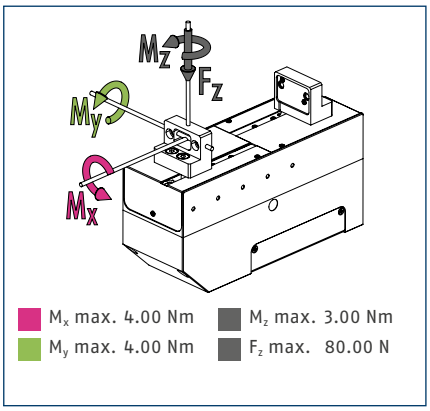

ⓘ The specified torques and forces are static values, apply for each base jaw, and may occur simultaneously. M_y may occur in addition to the torque generated by the gripping force.

Technical data

Description		WSG 050-110-B	WSG 050-110-P	WSG 050-210-B	WSG 050-210-P
ID		0306120	0306122	0306125	0306127
General operating data					
Stroke per jaw	[mm]	55	55	105	105
min. / max. gripping force	[N]	5/80	5/80	5/80	5/80
Recommended workpiece weight	[kg]	0.4	0.4	0.4	0.4
max. permitted finger length	[mm]	170	170	170	170
max. permitted weight per finger	[kg]	0.3	0.3	0.3	0.3
Repeat accuracy	[mm]	±0.03	±0.03	±0.03	±0.03
max. speed	[mm/s]	420	420	420	420
max. acceleration	[mm/s²]	5000	5000	5000	5000
Weight	[kg]	1.2	1.2	1.6	1.6
min. / max. ambient temperature	[°C]	5/50	5/50	5/50	5/50
IP class		20	20	20	20
Electrical operating data					
Controller electronics		integrated	integrated	integrated	integrated
Nominal voltage	[V DC]	24	24	24	24
Nominal current	[A]	0.9	0.9	0.9	0.9
max. power supply	[A]	2	2	2	2
Communication interface		Ethernet TCP/IP, Profibus, CAN bus	Ethernet TCP/IP, Profinet	Ethernet TCP/IP, Profibus, CAN bus	Ethernet TCP/IP, Profinet
Profibus interface	[Mbit/s]	12		12	
CAN interface	[Mbit/s]	1		1	
Parametrized interface		Ethernet TCP/IP	Ethernet TCP/IP	Ethernet TCP/IP	Ethernet TCP/IP

Main view

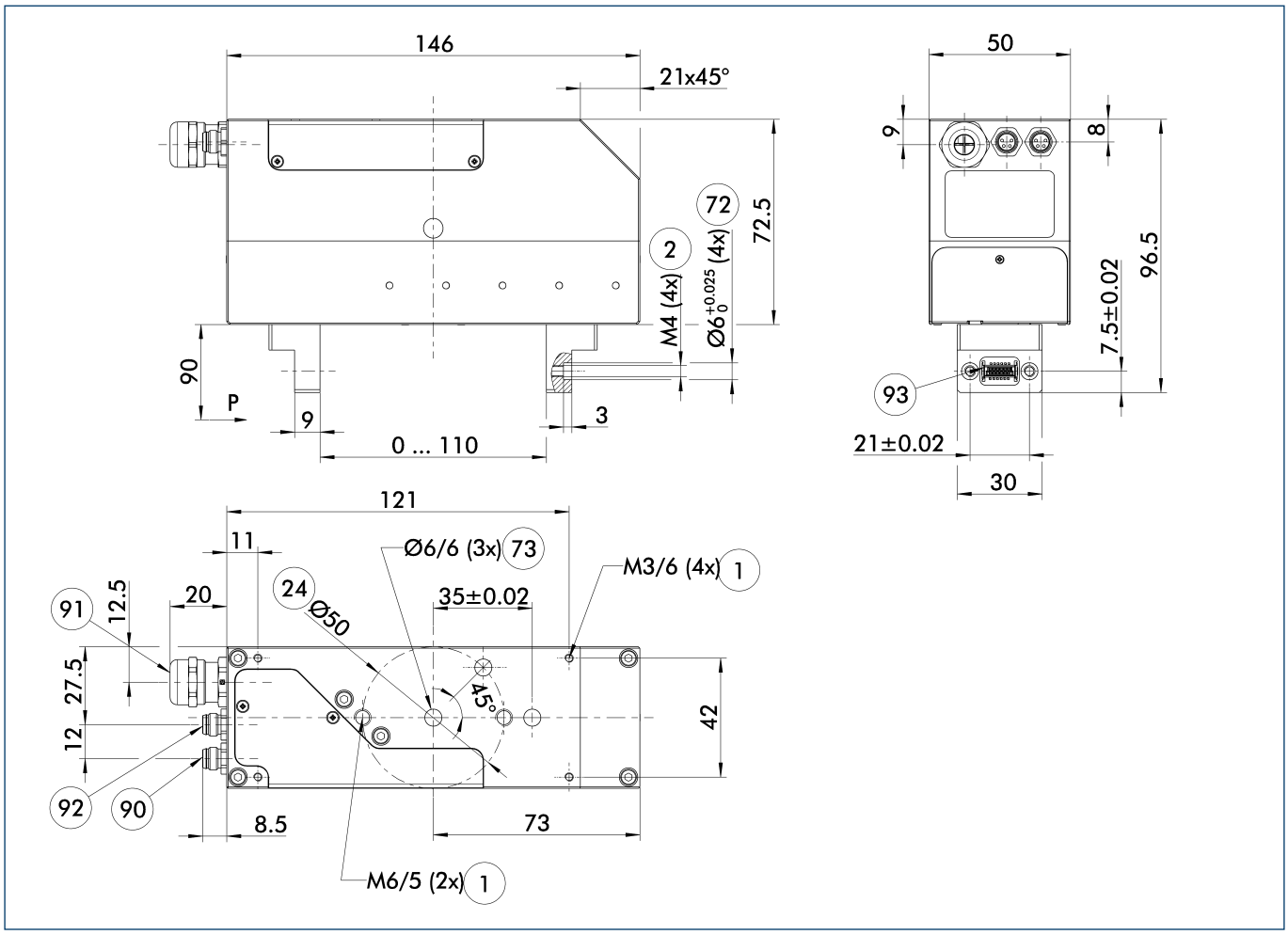

The drawing shows the basic version of the gripper with open jaws, without dimensional consideration of the options described below.

- (1) Gripper connection
- (2) Finger connection
- (24) Bolt circle
- (72) Fit for centering sleeves
- (73) Fit for centering pins
- (90) Connection power supply
- (91) Connection to the internal terminal box
- (92) Ethernet communication connection (optionally Profinet)
- (93) Integrated connector for top jaw

Maximum permitted finger projection

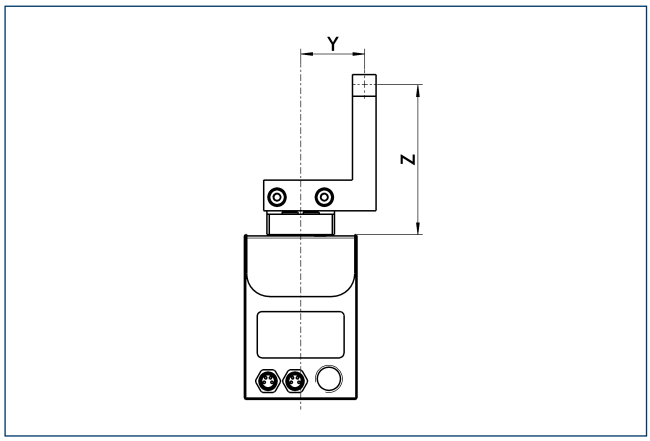

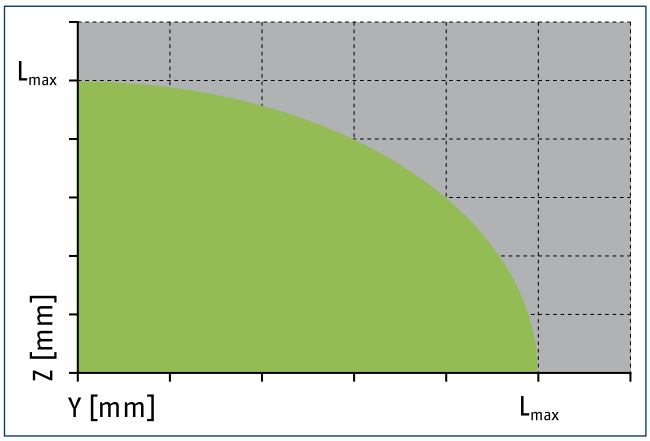

Permitted range Inadmissible range

L_{max} is equivalent to the maximum permitted finger length, see the chart of technical specifications.

WSG 50 stroke variant

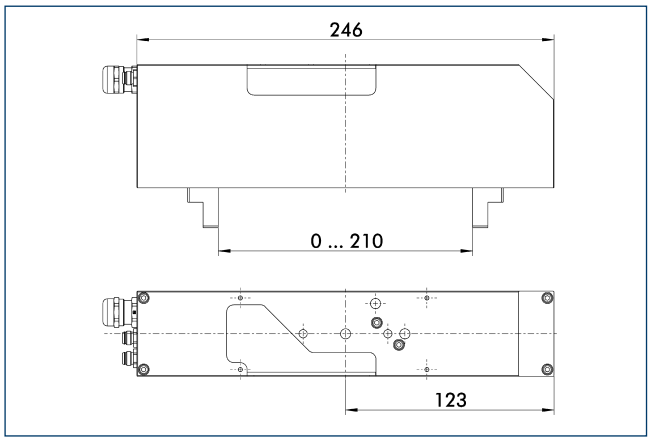

The drawing shows changes in dimensions of the versions with a differing stroke compared to the main view of the shown version.

Attachment fingers for WSG

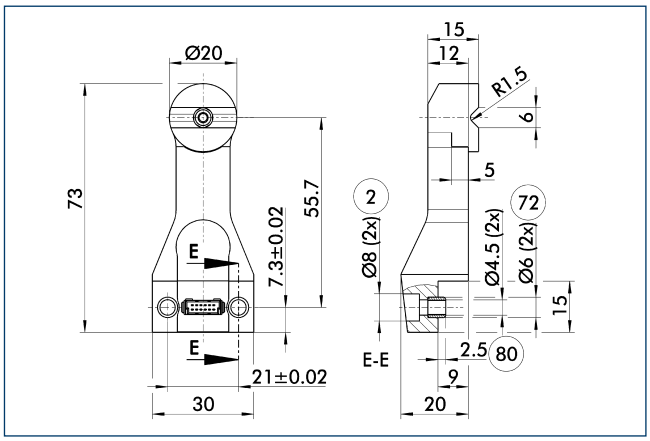

(2) Finger connection

(72) Fit for centering sleeves

(80) Depth of the centering sleeve hole in the mating part

The attachment fingers are optionally available with (DV) or without (GV) integrated strain gauges. The plastic insert can be reworked or exchanged for customized requirement. Fastening screws and centring sleeves are included in the scope of delivery.

Description	ID	Material	Scope of delivery
Finger			
ABF WSG32/50-DV	0306160	Aluminum	1
ABF WSG32/50-GV	0306150	Aluminum	1

ⓘ With operation of the WSG with the ABF attachment fingers, two pieces are normally required, optionally with or without integrated strain gauges.

Cable connector / cable extension

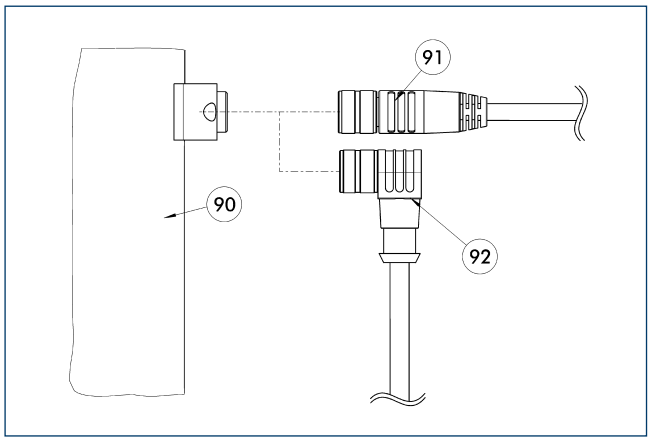

90 Connecting point for component

91 Cable with straight connection

92 Cable with angular connection

Description	ID	Length [m]	Connection electric cabinet sided
Connection cables			
KA BG08-L 4P-0500	0307767	5	open wires
KA BW08-L 4P-0500	0307765	5	open wires

ⓘ BG stands for a connection cable with a straight female connector and BW for an angled female connector.

Bus Capable. Flexible. High Performance Density.

PG Universal Gripper

Servo-electric 2-finger parallel gripper with highly precise gripping force control and long stroke

Field of Application

All-purpose, ultra-flexible gripper for great part variety and sensitive components in clean environments

Advantages – Your benefit

Electrically controlled gripper force adjustment for the delicate gripping of sensitive workpieces

Long stroke of 68 mm for flexible workpiece handling

Fully integrated control and power electronics for creating a decentralized control system

Versatile actuation options for simple integration into existing servo-controlled concepts via Profibus-DP, or CAN bus

Standard connecting elements and integrated control concept for extensive combination possibilities with other mechatronic modules

Sizes	Weight	Gripping force	Stroke per jaw	Workpiece weight
Quantity: 1	1.4 kg	200 N	34 mm	1 kg

Functional Description

The brushless servo motor drives the ball screw via a toothed belt drive.
The rotational movement is transformed into the linear movement of the base jaw by base jaws mounted on the spindle nuts.

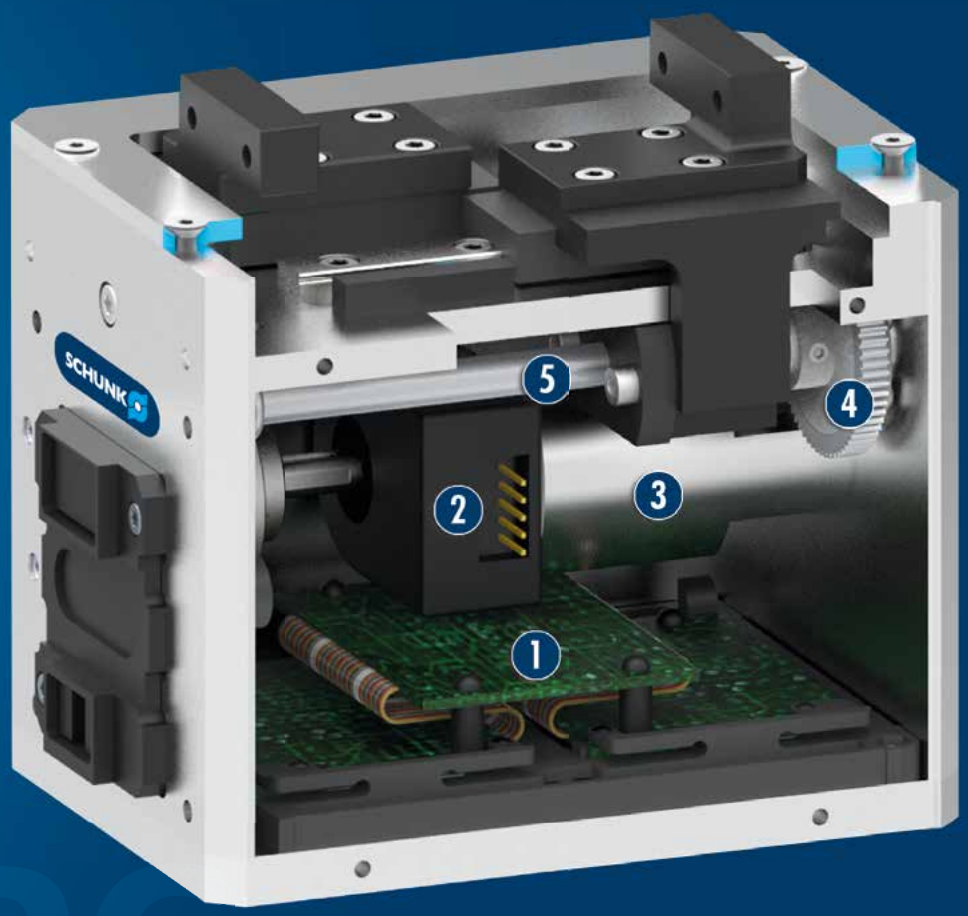

① **Control electronics**
integrated control and power electronics for decentralized actuation of the servomotor

② **Encoder**
for gripper positioning and position evaluation

③ **Drive**
Brushless DC servomotor

④ **Gear mechanism**
Force transmission from the servomotor to the drive spindle

⑤ **Spindle**
Transforms the rotational movement into a linear movement

CAD data, operating manuals and other current product documents are available at **www.schunk.com**

General Notes about the Series

Operating principle: Spindle drive

Housing material: Aluminum alloy, coated

Base jaw material: Aluminum alloy, anodized

Actuation: servo-electric, via brushless DC servomotor

Warranty: 24 months (details, general terms and conditions and operating manuals can be downloaded at www.schunk.com)

Scope of delivery: Enclosed pack with centering sleeves, assembly and operating manual with declaration of incorporation, DVD with SCHUNK software and commissioning assistant, functional module for control via Siemens S7-300 / 400. A DMI or MMI electric cap is required for operation of the gripper. This is not included in the scope of delivery and must be ordered separately.

Gripping force: is the arithmetic total of the gripping force applied to each gripper jaw at distance P (see illustration).

Finger length: is measured from the upper edge of the gripper housing in the direction of the main axis. The breach of the max. permitted finger length can bring higher abrasion.

Repeat accuracy: is defined as the spread of the limit position after 100 consecutive strokes.

Workpiece weight: is calculated for a force-fit connection with a coefficient of friction of 0.1 and a safety factor of 2 against slippage of the workpiece on acceleration due to gravity g. Considerably heavier workpiece weights are permitted with form-fit gripping.

Closing and opening times: Minimum closing and opening times are only the movement times of the base jaws at max. speed, max. acceleration without electrical restrictions (maximum current) and observance of the maximum permissible mass per finger.

Nominal currents: may be permanently applied. The information in the respective product documentation must be observed for all current levels beyond the rated current up to the maximum current.

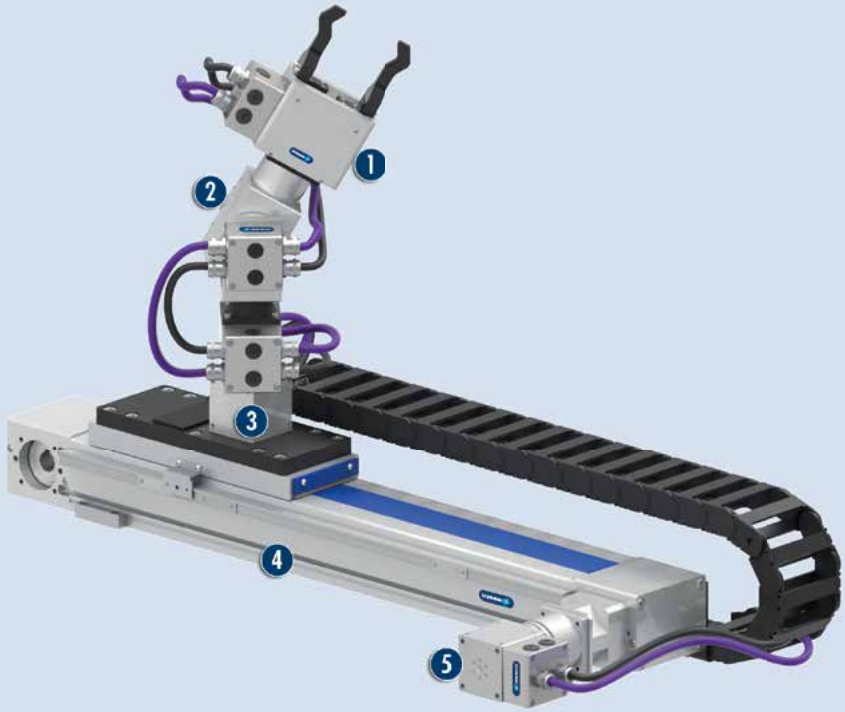

Application example

Electrically powered gripper solution with linear axis and rotary modules for the handling of sensitive workpieces

1. PG Universal Gripper
2. PW Pan-Tilt Actuator
3. PR Rotary Unit electric
4. HSB Beta Belt-driven Axis
5. PDU Drive

SCHUNK offers more ...

The following components make the product PG even more productive – the suitable addition for the highest functionality, flexibility, reliability, and controlled production.

MMI Connection Cap

DMI Connection Cap

Power- / and Data Cable

Centering Sleeves

Beta electrical Linear Module

PRH Rotary Actuator

Finger Blanks

ERS Rotary Actuator

ERD Rotary Actuator

PW electrical Rotary Pan-Tilt Actuator

PR Rotary Unit electric

PDU Rotary Unit electric

ⓘ Further information regarding the products can be found on the following product pages or at www.schunk.com. Please contact us for further information: SCHUNK technical hotline +49-7133-103-2696

Options and special Information

Integrated electronics: The electrical control of the gripper takes place via the fully integrated control and power electronics. Therefore, no additional external control units are required for the module.
Easy integration: There is a varied range of interfaces available, such as Profibus-DP or CAN bus as methods of communication. This enables the assembly of industrial bus networks and ensures easy integration into existing control systems.
Connection caps DMI and MMI: The DMI or MMI connection caps are available for connection of the gripper to the voltage supply or superordinate control unit. They are not included in the scope of delivery and must be ordered separately.

PG 70

SCHUNK Grippers electric | 2-Finger Parallel Grippers | Universal Gripper

Gripping force

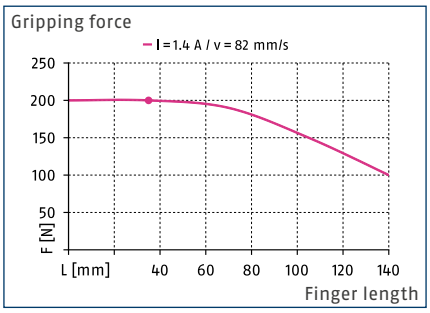

Speed

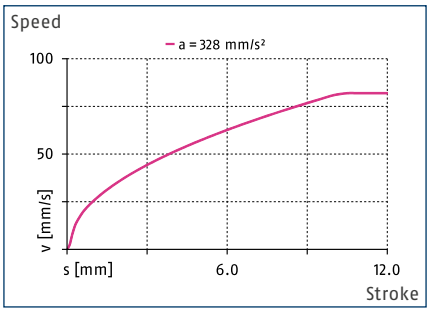

Finger load

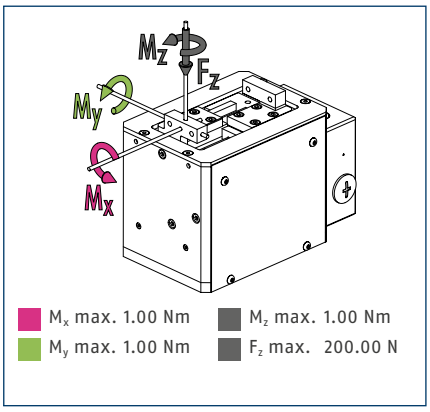

ⓘ The specified torques and forces are static values, apply for each base jaw, and may occur simultaneously. M_y may occur in addition to the torque generated by the gripping force.

Technical data

Description		PG 70
ID		0306095
General operating data		
Stroke per jaw	[mm]	34
min. / max. gripping force	[N]	30/200
Recommended workpiece weight	[kg]	1
max. permitted finger length	[mm]	140
Repeat accuracy	[mm]	0.05
Closing- / opening time	[s]	1.1/1.1
max. speed	[mm/s]	82
max. acceleration	[mm/s²]	328
Weight	[kg]	1.4
min. / max. ambient temperature	[°C]	5/55
IP class		20
Electrical operating data		
Controller electronics		integrated
Nominal voltage	[V DC]	24
Nominal current	[A]	1.4
max. power supply	[A]	1.8
Communication interface		Profibus, CAN bus, Digital I/O
Profibus interface	[Mbit/s]	1.5
CAN interface	[Mbit/s]	1
Number of digital inputs/outputs		4/4
Parametrized interface		RS232

Main view

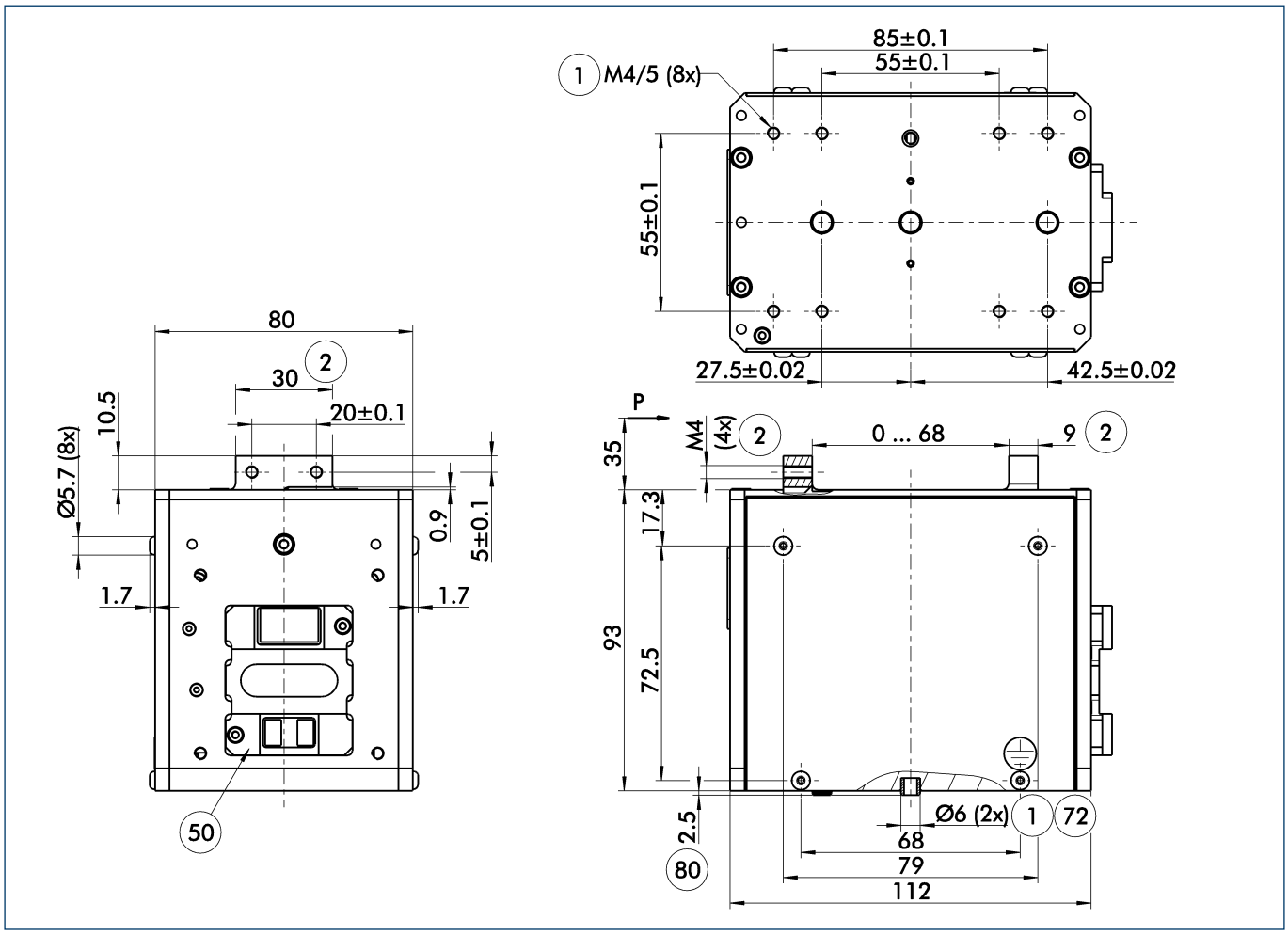

The drawing shows the basic version of the gripper with open jaws, without dimensional consideration of the options described below.

1. Gripper connection
2. Finger connection
50. Electrical connection
72. Fit for centering sleeves
80. Depth of the centering sleeve hole in the mating part

Maximum permitted finger projection

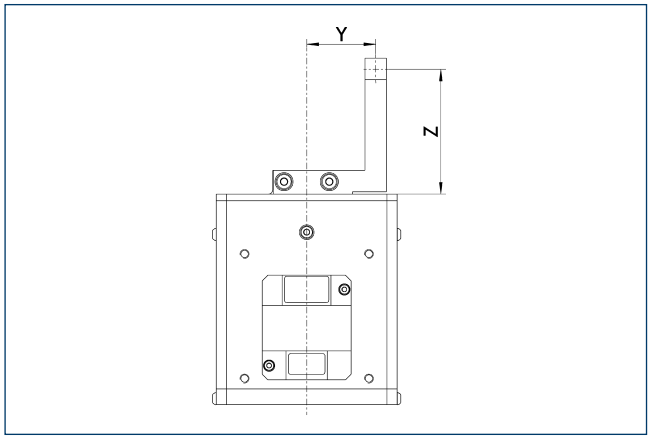

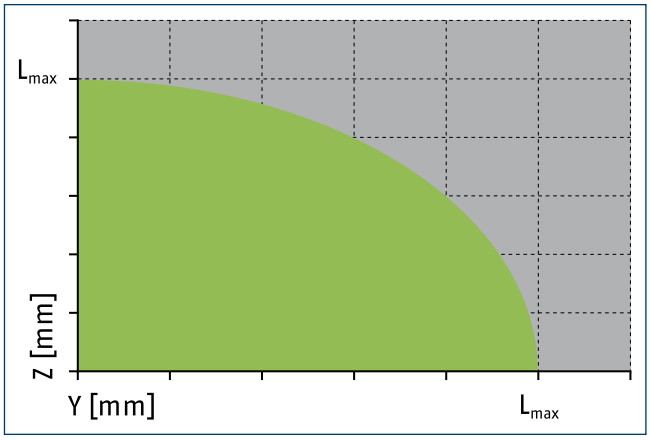

Permitted range

Inadmissible range

L_{max} is equivalent to the maximum permitted finger length, see the chart of technical specifications.

ABR-MPG-plus 70 finger blanks

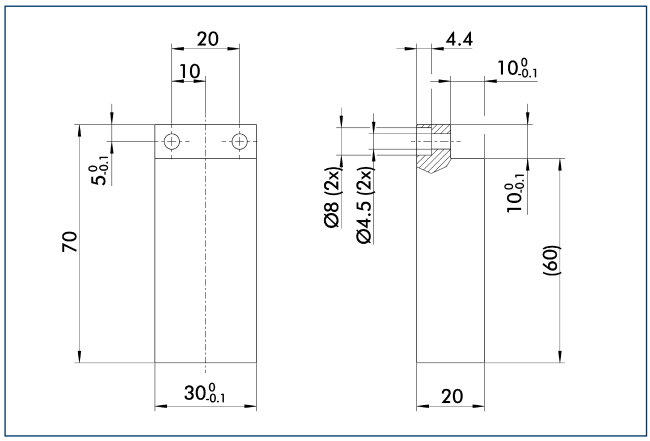

Finger blanks for customized subsequent machining.

Description	ID	Material	Scope of delivery
Finger blanks			
ABR-PG 70	0307850	Aluminum	1

Connection caps

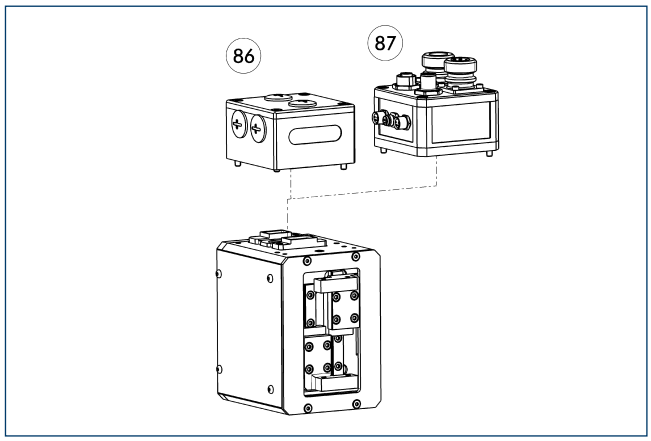

(86) DMI connection cap

(87) MMI connection cap

The DMI or MMI connection caps are required for connection of the modules to the voltage supply or superordinate control unit. For the DMI the connection of the cable wires takes place via connection terminals. The MMI enables convenient connection via plug connector.

Description	ID	
Connection caps		
DMI 070-V05-B	0307732	
MMI 070-V05-E-CN	0307500	
MMI 070-V05-D-CN	0307501	
MMI 070-V05-E-PB	0307502	
MMI 070-V05-D-PB	0307503	

ⓘ Further information and accessories can be found in the following displays.

DMI connection cap

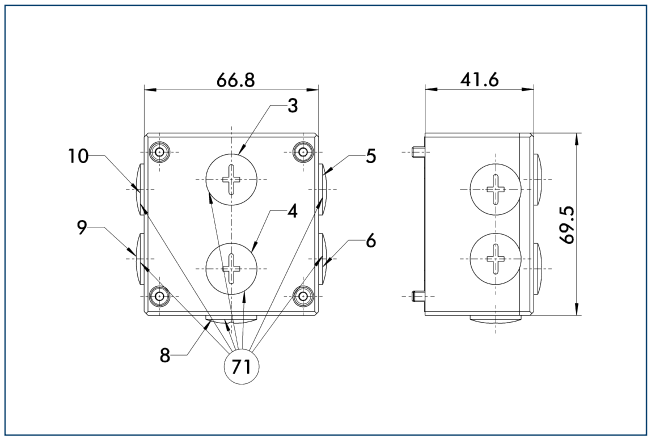

(71) M16x1.5 for cable guide penetrating screw connection

For the DMI the connection of the cable wires takes place via connection terminals. The DMI is prepared for Profibus and CAN bus communication interfaces.

Description	ID	
Connection caps		
DMI 070-V05-B	0307732	

MMI connection cap

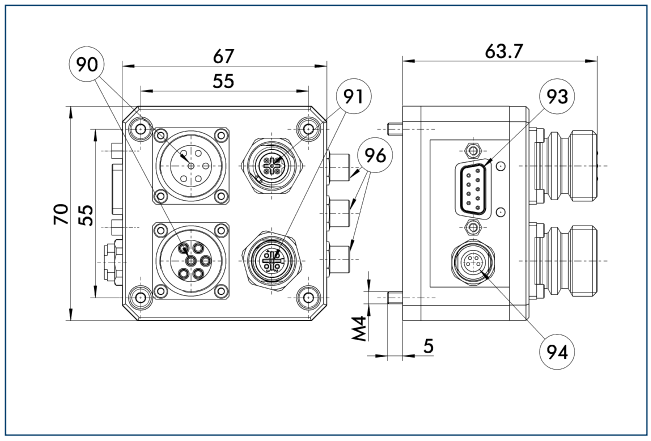

(90) Connection power supply (logic / load)

(91) Connection fieldbus M12

(93) Parametrized interface RS232

(94) Connection power supply service box (SSB)

(96) Connection ext. M8 limit switch or digital I/Os

Description	ID	
Connection caps		
MMI 070-V05-E-CN	0307500	
MMI 070-V05-D-CN	0307501	
MMI 070-V05-E-PB	0307502	
MMI 070-V05-D-PB	0307503	

Power cable for SCHUNK MMI

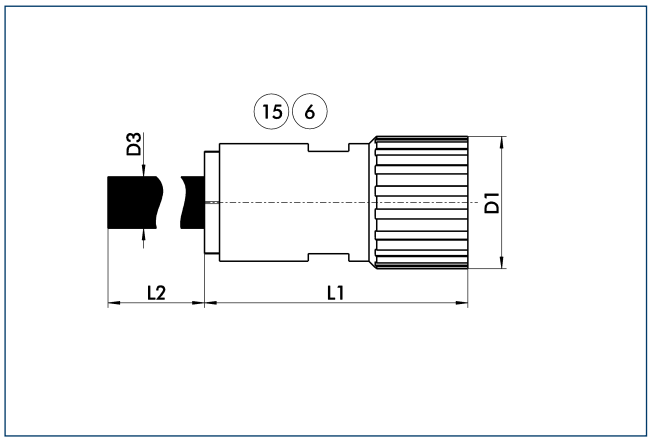

(6) Connection module side (15) Socket

The power cable for the MMI connection cab is available in various lengths (L2). The power cable has an M23 connection plug on the module side. The cable can be optionally fitted with a matching mating plug (GG) or open wires (GL) on the other side.

Description	ID	L_2 [m]	D_1
Power cable for SCHUNK MMI			
KA GGN2304-LK-00150-H	0349874	1.5	M23
KA GGN2304-LK-00300-H	0349875	3	M23
KA GGN2304-LK-00500-H	0349876	5	M23
KA GGN2304-LK-01000-H	0349877	10	M23
KA GLN2304-LK-00150-H	0349870	1.5	M23
KA GLN2304-LK-00300-H	0349871	3	M23
KA GLN2304-LK-00500-H	0349872	0.5	M23
KA GLN2304-LK-01000-H	0349873	1	M23

ⓘ Please observe the bending radius (7.5 times the cable diameter).

CAN bus cable

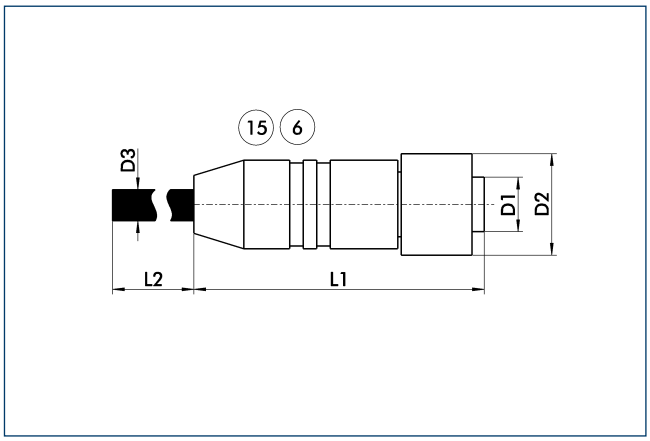

(6) Connection module side (15) Socket

The CAN bus cable is pre-assembled for our mechatronic modules with MMI connection cap and the RPH rotary module. It has an M12 connector plug on both sides.

Description	ID	L_2 [m]	D_1
CAN bus cable			
KA GGN1204-CN-00150-A	0349770	1.5	M12
KA GGN1204-CN-00300-A	0349771	3	M12
KA GGN1204-CN-00500-A	0349772	5	M12
KA GGN1204-CN-01000-A	0349773	10	M12

ⓘ Please observe the bending radius (7.5 times the cable diameter).

Profibus cable

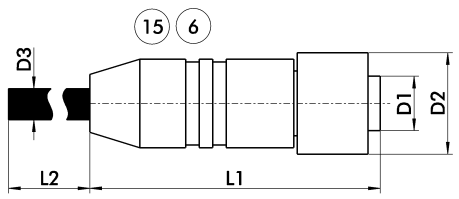

(6) Connection module side (15) Socket

The Profibus cable is pre-assembled for our mechatronic modules with MMI connection cap and PRH rotary module. It has an M12 connector plug on both sides.

Description	ID	L_2 [m]	D_1
Profibus cable			
KA GGN1204-PB-00150-A	0349750	1.5	M12
KA GGN1204-PB-00300-A	0349751	3	M12
KA GGN1204-PB-00500-A	0349752	5	M12
KA GGN1204-PB-01000-A	0349753	10	M12

ⓘ Please observe the bending radius (7.5 times the cable diameter).

Terminators

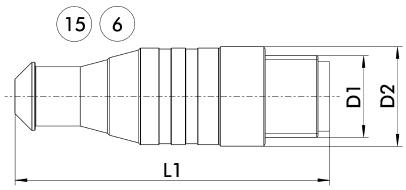

(6) Connection module side (15) Socket

The ST terminating resistors are provided for the termination of the bus string directly at the SCHUNK module. The terminating resistors are available for the Profibus (RB) or CAN bus (CN) bus systems.

Description	ID	D_1
Terminators		
ST SG1204-CN-A-A	0349660	M12
ST SG1204-PB-A-A	0349650	M12

ⓘ A suitable terminator must be mounted on the last module in the CAN or Profibus line.

Connecting element – straight

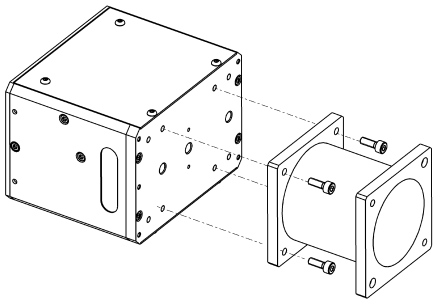

Straight standard element for connection of mechatronic modules PG, PR, PDU, and PSM in size 70.

Description	ID	Dimensions
Connecting element		
PAM 100	0307800	70x70/35/70x70 mm
PAM 101	0307801	70x70/70/70x70 mm

ⓘ Special lengths are available on request. Please contact us.

PAM 100 – straight

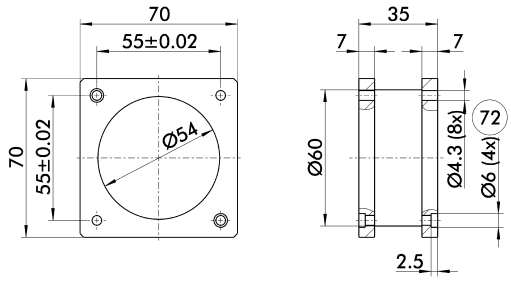

(72) Fit for centering sleeves

Suitable for mechatronic modules PG, PR, PDU, and PSM in size 70.

Description	ID	Dimensions
Connecting element		
PAM 100	0307800	70x70/35/70x70 mm

PAM 101 – straight

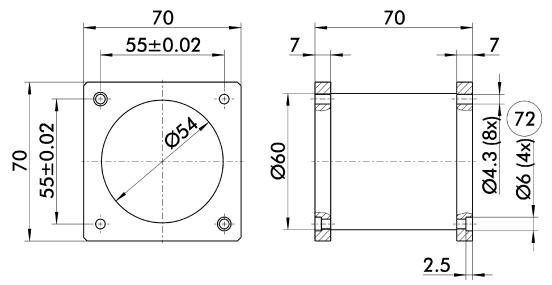

(72) Fit for centering sleeves

Suitable for mechatronic modules PG, PR, PDU, and PSM in size 70.

Description	ID	Dimensions
Connecting element		
PAM 101	0307801	70x70/70/70x70 mm

Connecting element – conical

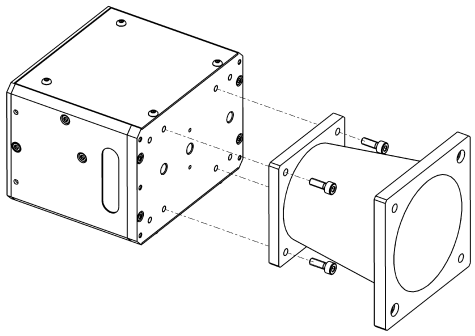

Straight standard element for connection of mechatronic modules PG, PR, PDU, and PSM in size 70/90.

Description	ID	
Connecting element		
PAM 110	0307810	
PAM 111	0307811	

ⓘ Special lengths are available on request. Please contact us.

PAM 110 – conical

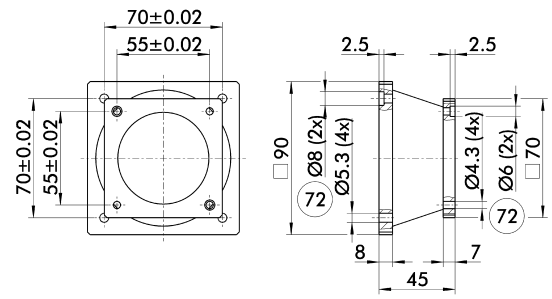

(72) Fit for centering sleeves

Suitable for mechatronic modules PG, PR, PDU, and PSM in size 70/90.

Description	ID	
Connecting element		
PAM 110	0307810	

PAM 111 – conical

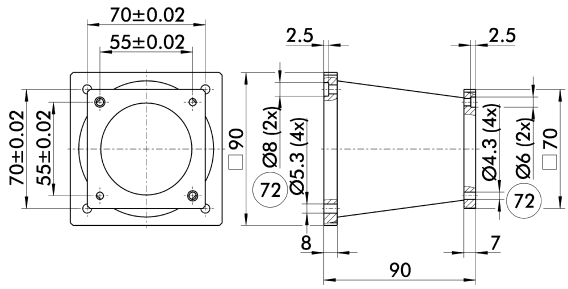

(72) Fit for centering sleeves

Suitable for mechatronic modules PG, PR, PDU, and PSM in size 70/90.

Description	ID	
Connecting element		
PAM 111	0307811	

Connecting element – angle

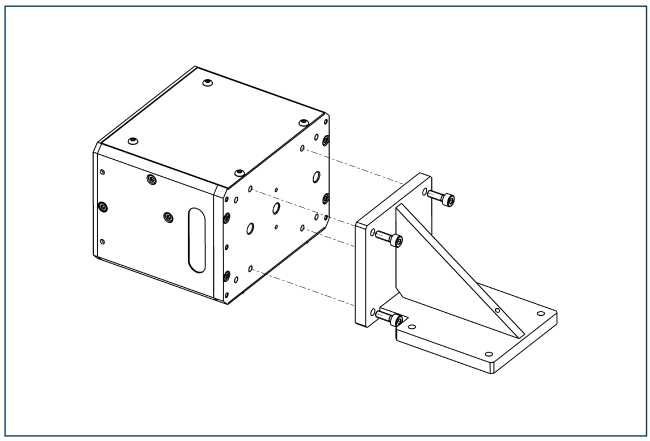

Angled standard element for connection of mechatronic modules PG, PR, PDU, and PSM in size 70.

Description	ID	
Connecting element		
PAM 120	0307820	

ⓘ Special lengths are available on request. Please contact us.

PAM 120 – angle

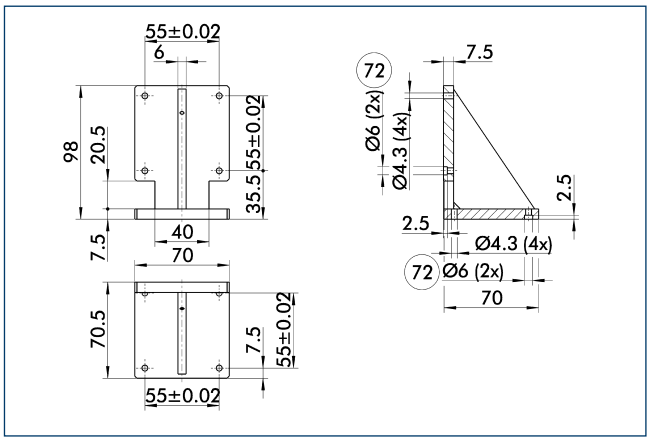

(72) Fit for centering sleeves

Suitable for mechatronic modules PG, PR, PDU, and PSM in size 70.

Description	ID	
Connecting element		
PAM 120	0307820	

Flexible. High Performance Density. Bus Capable.

PEH Long-stroke Gripper

Servo-electric 2-finger parallel gripper with large jaw stroke for large parts and diverse parts spectrum

Field of Application

Universal highly flexible gripper for large diversity of parts in clean to slightly contaminated work environment

Advantages – Your benefit

Gripping force regulation in a range of 100 N – 1,800 N for powerful gripping of a wide variety of workpieces

Large stroke of 200 mm for flexible workpiece handling

Fully integrated control and power electronics for creating a decentralized control system

Versatile actuation options for simple integration into existing servo-controlled concepts via Profibus-DP, or CAN bus

Solid guides for the precise handling of all kinds of workpieces

High maximum moments possible suitable for using long gripper fingers

Mounting from two sides in three screw directions for universal and flexible gripper assembly

Sizes	Weight	Gripping force	Stroke per jaw	Workpiece weight
Quantity: 3	5.4 .. 16.8 kg	750 .. 1800 N	60 .. 100 mm	2 .. 9 kg

Functional Description

The brushless servo motor drives the ball screw via a toothed belt drive.
A base jaw is moved by means of a carrier on the spindle.

The jaw stroke is synchronized by means of rack and pinion kinematics.

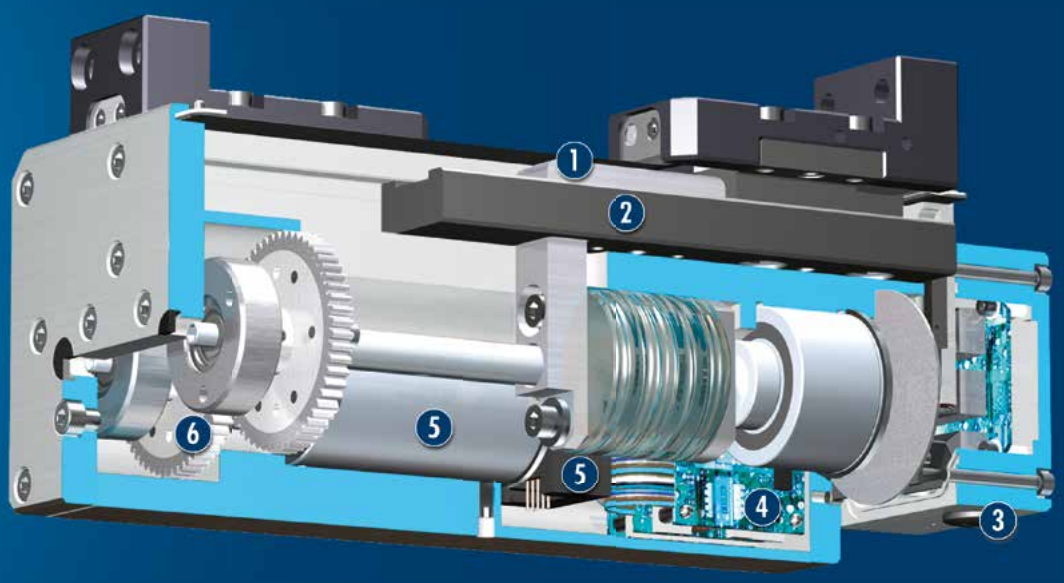

① **Kinematics**
Rack and pinion principle for centric gripping

② **Sliding guide**
for precise gripping with minimal play at a high load capacity

③ **DMI connection cap**
Electrical connection for energy supply and communication

④ **Control electronics**
Integrated control and power electronics for decentralized actuation of the servomotor

⑤ **Drive**
Brushless DC servomotor with hall-effect sensors and encoder

⑥ **Gear mechanism**
Force transmission from the servomotor to the drive spindle

CAD data, operating manuals and other current product documents are available at **www.schunk.com**

General Notes about the Series

Operating principle: Spindle drive, synchronized by rack and pinion principle

Housing material: Aluminum alloy, coated

Base jaw material: Steel

Actuation: servo-electric, via brushless DC servomotor

Warranty: 24 months (details, general terms and conditions and operating manuals can be downloaded at www.schunk.com)

Scope of delivery: Enclosed pack with centering sleeves, assembly and operating manual with declaration of incorporation, DVD with SCHUNK software and commissioning assistant, functional module for control via Siemens S7-300 / 400. A DMI or MMI electric cap is required for operation of the gripper. This is not included in the scope of delivery and must be ordered separately.

Gripping force: is the arithmetic total of the gripping force applied to each gripper jaw at distance P (see illustration).

Finger length: is measured from the upper edge of the gripper housing in the direction of the main axis. The breach of the max. permitted finger length can bring higher abrasion.

Repeat accuracy: is defined as the spread of the limit position after 100 consecutive strokes.

Workpiece weight: is calculated for a force-fit connection with a coefficient of friction of 0.1 and a safety factor of 2 against slippage of the workpiece on acceleration due to gravity g. Considerably heavier workpiece weights are permitted with form-fit gripping.

Closing and opening times: Minimum closing and opening times are only the movement times of the base jaws at max. speed, max. acceleration without electrical restrictions (maximum current) and observance of the maximum permissible mass per finger.

Nominal currents: may be permanently applied. The information in the respective product documentation must be observed for all current levels beyond the rated current up to the maximum current.

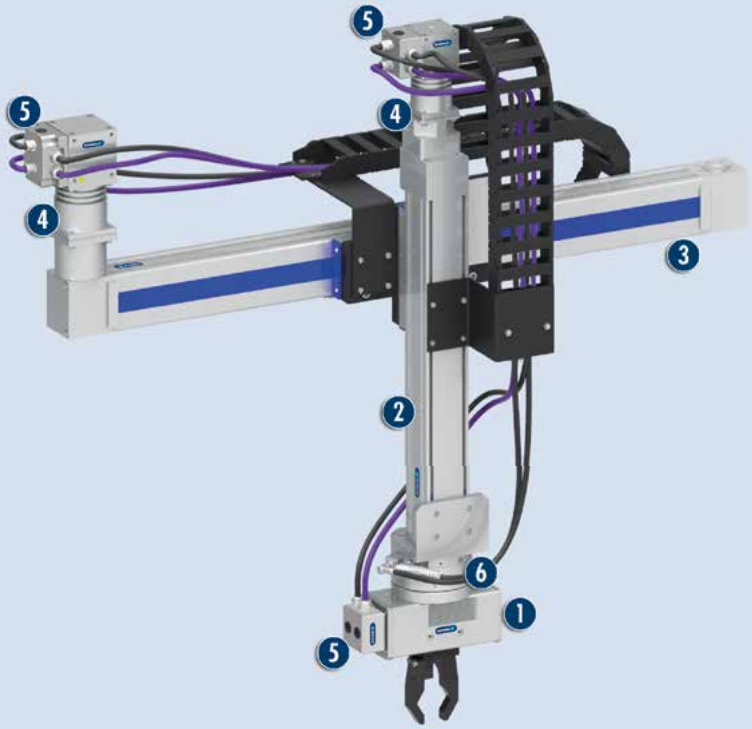

Application example

Fully electrically driven gantry axis for loading and depalettizing of various components with a large variance

1. PEH Long-stroke Gripper
2. Vertical Axis with spindle drive HSB Beta
3. Linear Axis with toothed-belt drive HSB Beta
4. Servo-electric Drive with Gear PDU
5. DMI Connection Cap
6. Rotary Module with ERS Torque Motor

SCHUNK offers more ...

The following components make the product PEH even more productive – the suitable addition for the highest functionality, flexibility, reliability, and controlled production.

Centering Sleeves

DMI Connection Cap

MMI Connection Cap

Power- / and Data Cable

PW electrical Rotary Pan-Tilt Actuator

PR Rotary Unit electric

PG Universal Gripper

PDU Rotary Unit electric

PSM servo-electric Drive

ⓘ Further information regarding the products can be found on the following product pages or at www.schunk.com. Please contact us for further information: SCHUNK technical hotline +49-7133-103-2696

Options and special Information

Integrated electronics: The electrical control of the gripper takes place via the fully integrated control and power electronics. Therefore, no additional external control units are required for the module.
Easy integration: There is a varied range of interfaces available, such as Profibus-DP or CAN bus as methods of communication. This enables the assembly of industrial bus networks and ensures easy integration into existing control systems.
Connection caps DMI and MMI: The DMI or MMI connection caps are available for connection of the gripper to the voltage supply or superordinate control unit. They are not included in the scope of delivery and must be ordered separately.

PEH 30

SCHUNK Grippers electric | 2-Finger Parallel Grippers | Long-stroke Gripper

Gripping force

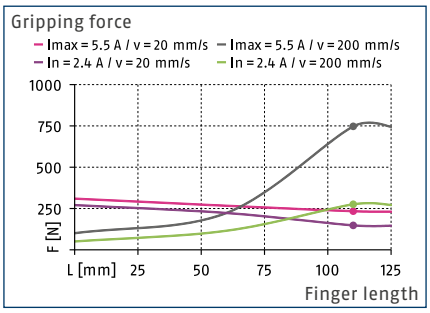

Speed

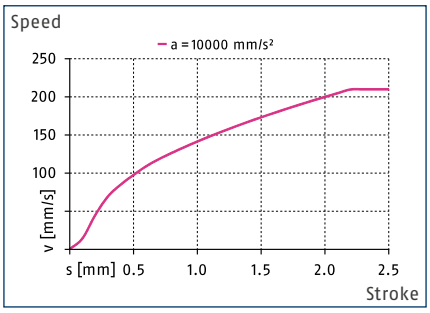

Finger load

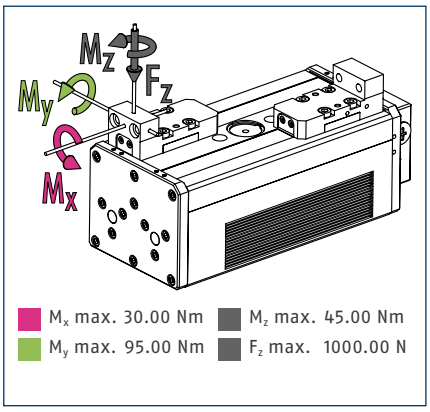

ⓘ The specified torques and forces are static values, apply for each base jaw, and may occur simultaneously. M_y may occur in addition to the torque generated by the gripping force.

Technical data

Description		PEH 30
ID		0306060
General operating data		
Stroke per jaw	[mm]	60
min. / max. gripping force	[N]	150/750
Recommended workpiece weight	[kg]	2
max. permitted finger length	[mm]	125
max. permitted weight per finger	[kg]	2
Repeat accuracy	[mm]	±0.05
Closing- / opening time	[s]	1/1
max. speed	[mm/s]	210
max. acceleration	[mm/s²]	10000
Weight	[kg]	5.4
min. / max. ambient temperature	[°C]	5/45
IP class		41
Electrical operating data		
Controller electronics		integrated
Nominal voltage	[V DC]	24
Nominal current	[A]	2.4
max. power supply	[A]	8
Communication interface		Profibus, CAN bus, Digital I/O
Profibus interface	[Mbit/s]	1.5
CAN interface	[Mbit/s]	1
Number of digital inputs/outputs		4/4
Parametrized interface		RS232

ⓘ The recommended workpiece weight was calculated for the maximum gripping force. The maximum gripping force can be achieved at max. speed and with max. current, which may only be applied temporarily. Please contact SCHUNK technical sales for further enquiries.

Main view

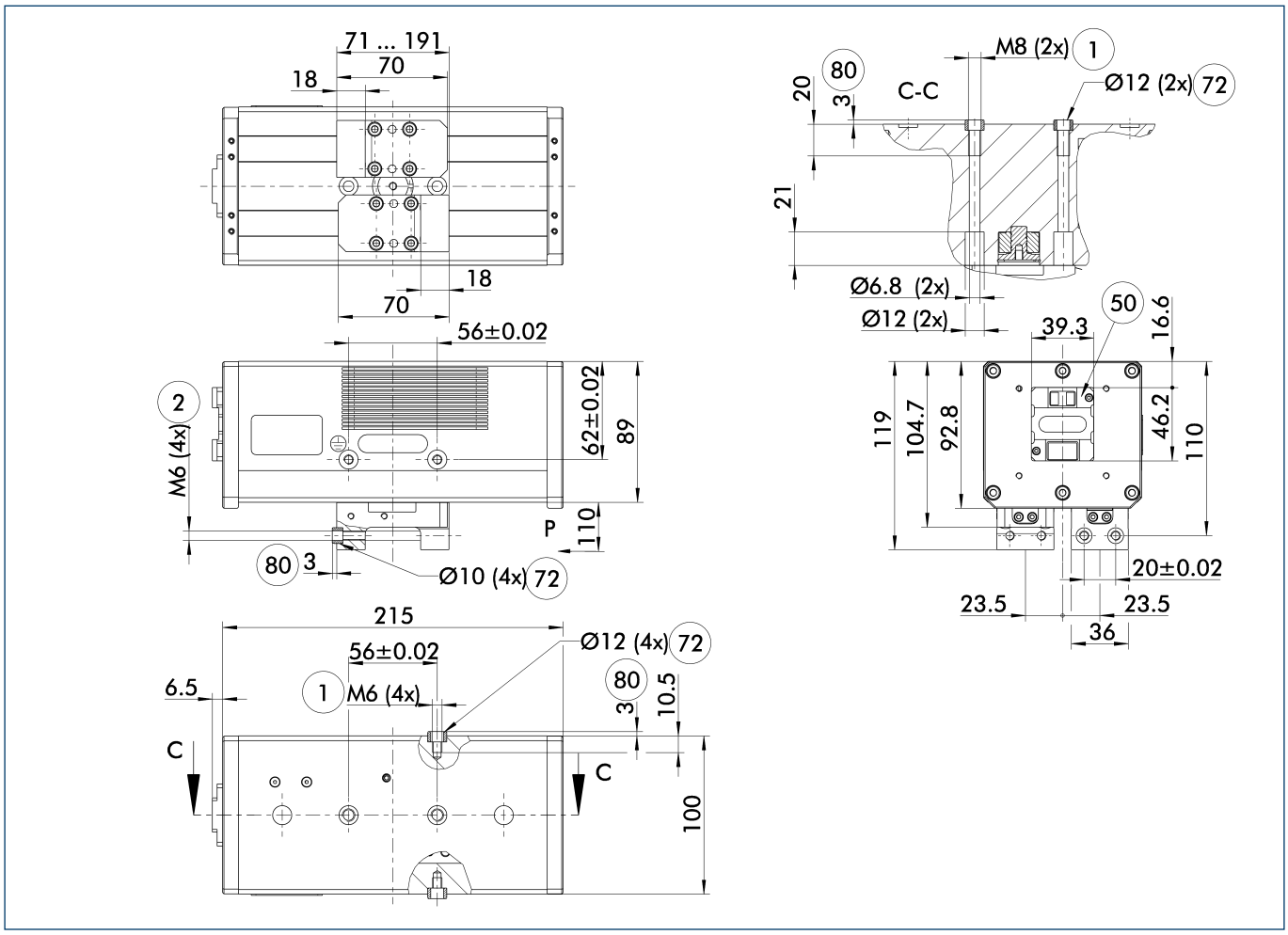

The drawing shows the gripper in the basic version with closed jaws, without dimensional consideration of the options described below.

1. Gripper connection
2. Finger connection
50. Electrical connection
72. Fit for centering sleeves
80. Depth of the centering sleeve hole in the mating part

Maximum permitted finger projection

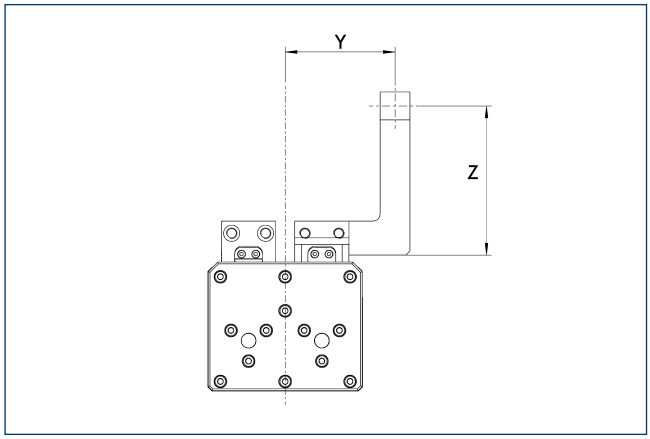

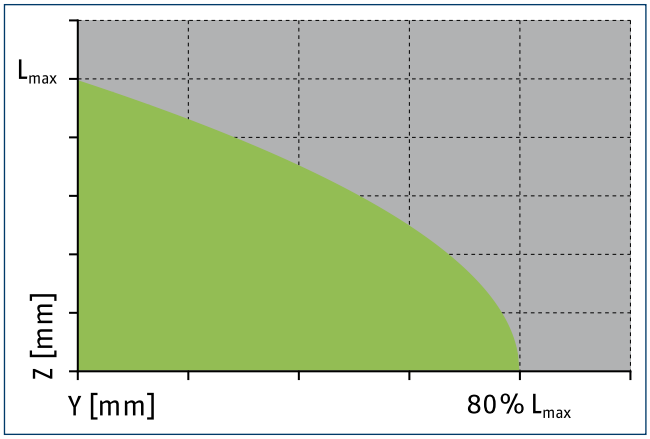

Permitted range

Inadmissible range

L_{max} is equivalent to the maximum permitted finger length, see the chart of technical specifications.

ZBA PHF 30 intermediate jaws

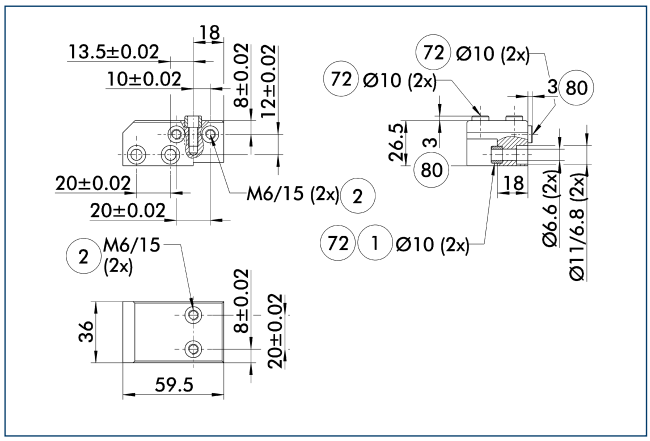

1 Gripper connection
2 Finger connection
72 Fit for centering sleeves
80 Depth of the centering sleeve hole in the mating part

Optionally intermediate jaws can be used, enabling direct connection and alignment of top jaws and various standard accessories in Z-direction.

Description	ID	Material	Scope of delivery
Intermediate jaws			
ZBA-PFH 30	0300220	Aluminum	2

Connection caps

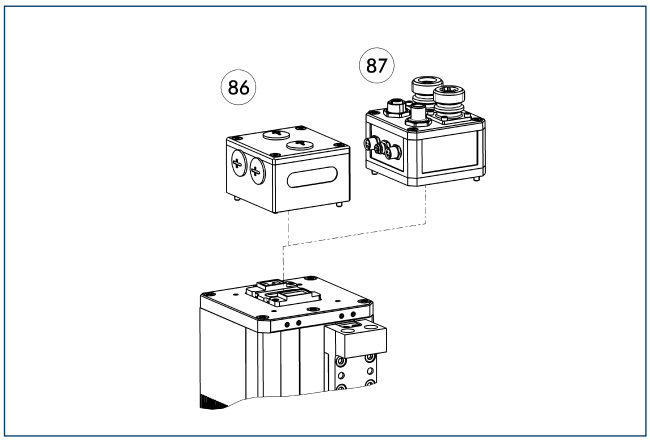

86 DMI connection cap
87 MMI connection cap

The DMI or MMI connection caps are required for connection of the modules to the voltage supply or superordinate control unit. For the DMI the connection of the cable wires takes place via connection terminals. The MMI enables convenient connection via plug connector.

Description	ID	
Connection caps		
DMI 070-V05-B	0307732	
MMI 070-V05-E-CN	0307500	
MMI 070-V05-D-CN	0307501	
MMI 070-V05-E-PB	0307502	
MMI 070-V05-D-PB	0307503	

ⓘ Further information and accessories can be found in the following displays.

DMI connection cap

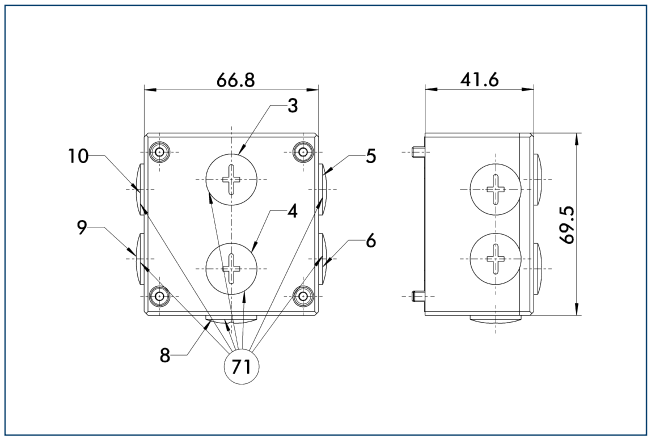

71 M16x1.5 for cable guide penetrating screw connection

For the DMI the connection of the cable wires takes place via connection terminals. The DMI is prepared for Profibus and CAN bus communication interfaces.

Description	ID	
Connection caps		
DMI 070-V05-B	0307732	

MMI connection cap

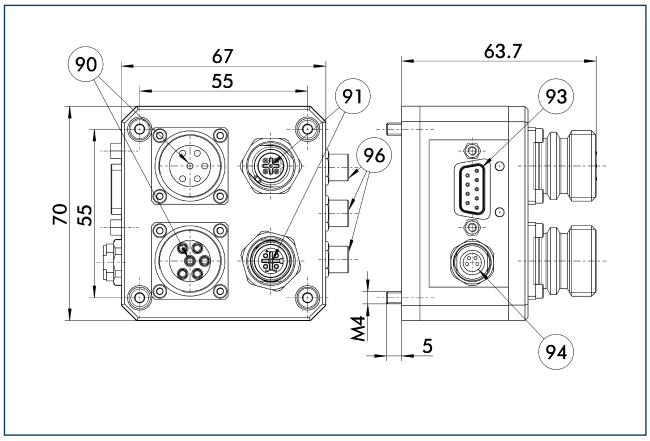

90 Connection power supply (logic / load)
91 Connection fieldbus M12
93 Parametrized interface RS232
94 Connection power supply service box (SSB)
96 Connection ext. M8 limit switch or digital I/Os

The MMI is available with digital inputs and outputs (D) or prepared for external limit switches (E). The MMI is optionally available with the Profibus (PB) or CAN bus (CB) communication interfaces.

Description	ID	
Connection caps		
MMI 070-V05-E-CN	0307500	
MMI 070-V05-D-CN	0307501	
MMI 070-V05-E-PB	0307502	
MMI 070-V05-D-PB	0307503	

Power cable for SCHUNK MMI

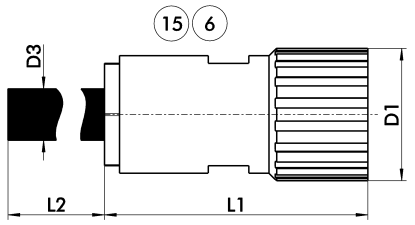

(6) Connection module side (15) Socket

The power cable for the MMI connection cab is available in various lengths (L2). The power cable has an M23 connection plug on the module side. The cable can be optionally fitted with a matching mating plug (GG) or open wires (GL) on the other side.

Description	ID	L_2 [m]	D_1
Power cable for SCHUNK MMI			
KA GGN2304-LK-00150-H	0349874	1.5	M23
KA GGN2304-LK-00300-H	0349875	3	M23
KA GGN2304-LK-00500-H	0349876	5	M23
KA GGN2304-LK-01000-H	0349877	10	M23
KA GLN2304-LK-00150-H	0349870	1.5	M23
KA GLN2304-LK-00300-H	0349871	3	M23
KA GLN2304-LK-00500-H	0349872	0.5	M23
KA GLN2304-LK-01000-H	0349873	1	M23

ⓘ Please observe the bending radius (7.5 times the cable diameter).

CAN bus cable

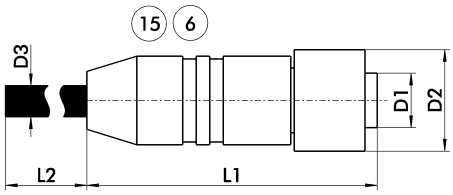

(6) Connection module side (15) Socket

The CAN bus cable is pre-assembled for our mechatronic modules with MMI connection cap and the RPH rotary module. It has an M12 connector plug on both sides.

Description	ID	L_2 [m]	D_1
CAN bus cable			
KA GGN1204-CN-00150-A	0349770	1.5	M12
KA GGN1204-CN-00300-A	0349771	3	M12
KA GGN1204-CN-00500-A	0349772	5	M12
KA GGN1204-CN-01000-A	0349773	10	M12

ⓘ Please observe the bending radius (7.5 times the cable diameter).

Profibus cable

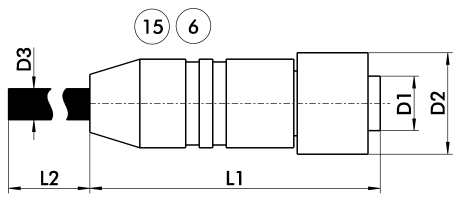

(6) Connection module side (15) Socket

The Profibus cable is pre-assembled for our mechatronic modules with MMI connection cap and PRH rotary module. It has an M12 connector plug on both sides.

Description	ID	L_2 [m]	D_1
Profibus cable			
KA GGN1204-PB-00150-A	0349750	1.5	M12
KA GGN1204-PB-00300-A	0349751	3	M12
KA GGN1204-PB-00500-A	0349752	5	M12
KA GGN1204-PB-01000-A	0349753	10	M12

ⓘ Please observe the bending radius (7.5 times the cable diameter).

Terminators

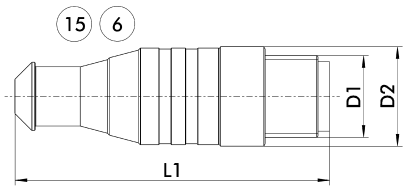

(6) Connection module side (15) Socket

The ST terminating resistors are provided for the termination of the bus string directly at the SCHUNK module. The terminating resistors are available for the Profibus (RB) or CAN bus (CN) bus systems.

Description	ID	D_1
Terminators		
ST SG1204-CN-A-A	0349660	M12
ST SG1204-PB-A-A	0349650	M12

ⓘ A suitable terminator must be mounted on the last module in the CAN or Profibus line.

PEH 40

SCHUNK Grippers electric | 2-Finger Parallel Grippers | Long-stroke Gripper

Gripping force, O.D. gripping

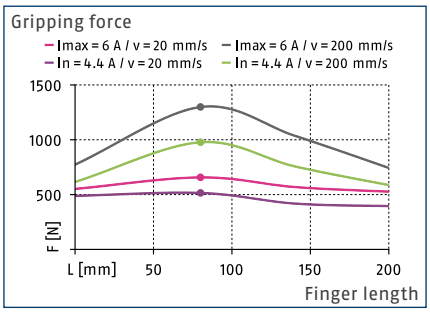

Speed

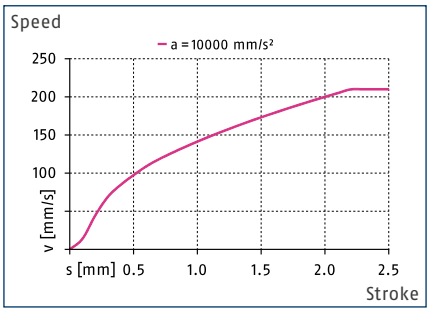

Finger load

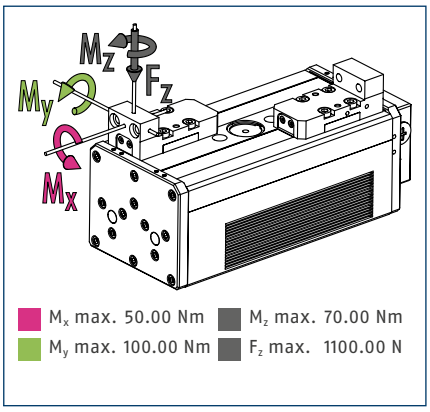

ⓘ The specified torques and forces are static values, apply for each base jaw, and may occur simultaneously. M_y may occur in addition to the torque generated by the gripping force.

Technical data

Description		PEH 40
ID		0306062
General operating data		
Stroke per jaw	[mm]	60
min. / max. gripping force	[N]	150/1300
Recommended workpiece weight	[kg]	4
max. permitted finger length	[mm]	200
max. permitted weight per finger	[kg]	3
Repeat accuracy	[mm]	±0.05
Closing- / opening time	[s]	1/1
max. speed	[mm/s]	210
max. acceleration	[mm/s²]	10000
Weight	[kg]	7.8
min. / max. ambient temperature	[°C]	5/55
IP class		41
Electrical operating data		
Controller electronics		integrated
Nominal voltage	[V DC]	24
Nominal current	[A]	4.4
max. power supply	[A]	12.4
Communication interface		Profibus, CAN bus, Digital I/O
Profibus interface	[Mbit/s]	1.5
CAN interface	[Mbit/s]	1
Number of digital inputs/outputs		4/4
Parametrized interface		RS232

ⓘ The recommended workpiece weight was calculated for the maximum gripping force. The maximum gripping force can be achieved at max. speed and with max. current, which may only be applied temporarily. Please contact SCHUNK technical sales for further enquiries.

Main view

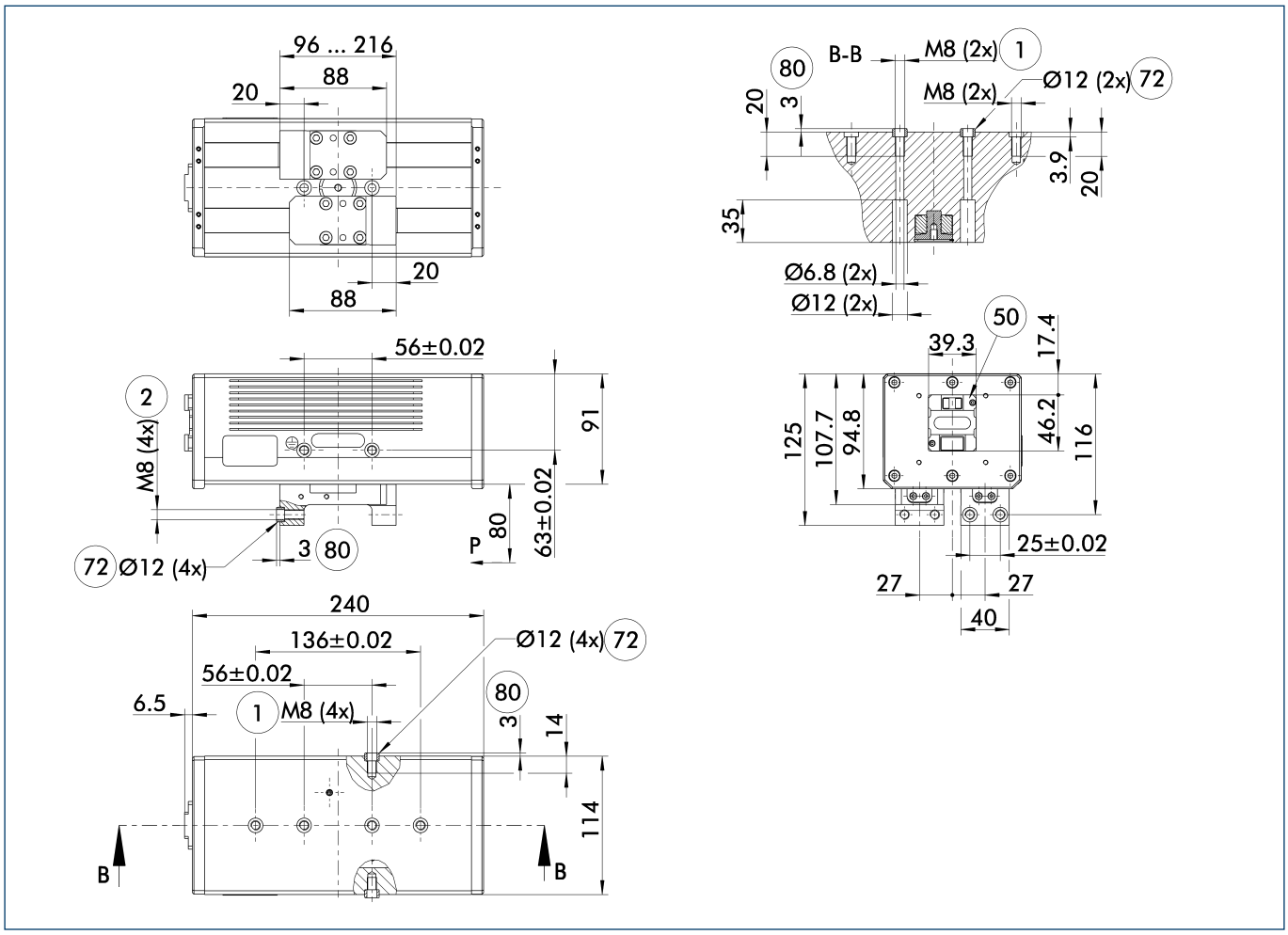

The drawing shows the gripper in the basic version with closed jaws, without dimensional consideration of the options described below.

1. Gripper connection
2. Finger connection
50. Electrical connection
72. Fit for centering sleeves
80. Depth of the centering sleeve hole in the mating part

Maximum permitted finger projection

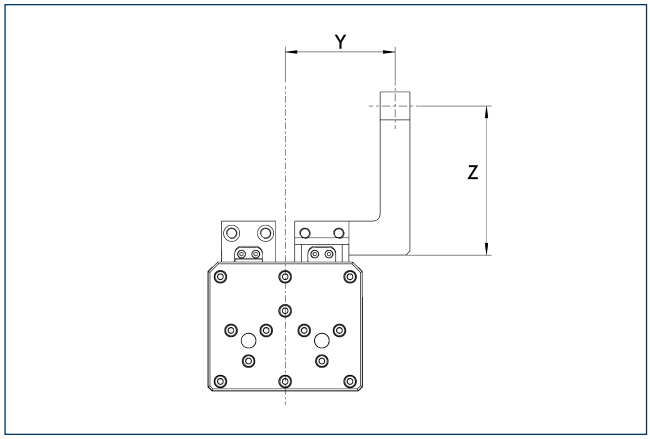

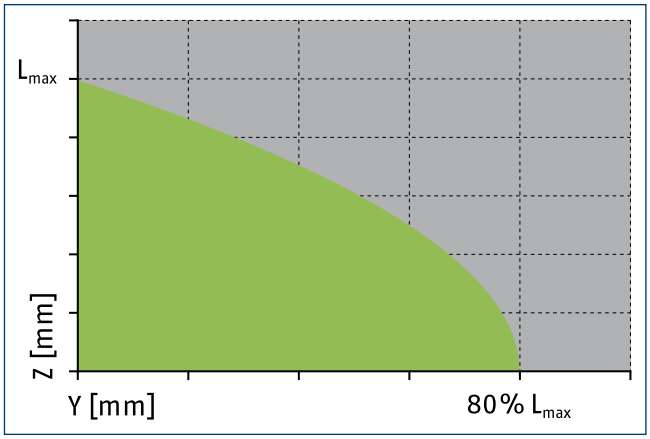

Permitted range

Inadmissible range

L_{max} is equivalent to the maximum permitted finger length, see the chart of technical specifications.

ZBA PFH 40 intermediate jaws

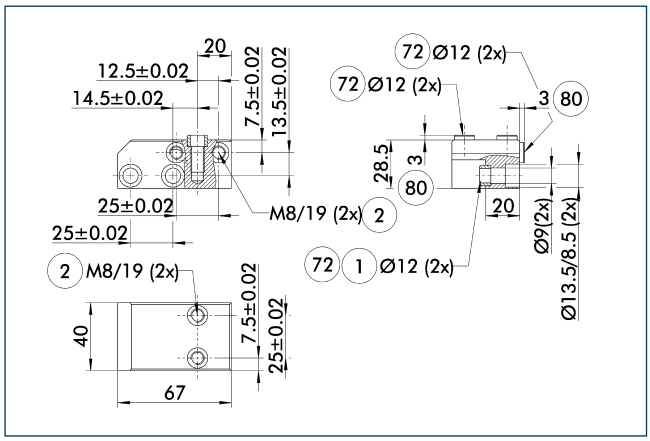

(1) Gripper connection
(2) Finger connection
(72) Fit for centering sleeves
(80) Depth of the centering sleeve hole in the mating part

Optionally intermediate jaws can be used, enabling direct connection and alignment of top jaws and various standard accessories in Z-direction.

Description	ID	Material	Scope of delivery
Intermediate jaws			
ZBA-PFH 40	0300221	Aluminum	2

Connection caps

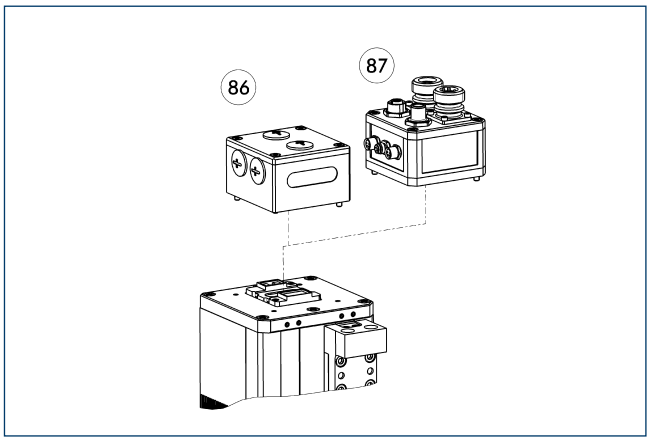

(86) DMI connection cap
(87) MMI connection cap

The DMI or MMI connection caps are required for connection of the modules to the voltage supply or superordinate control unit. For the DMI the connection of the cable wires takes place via connection terminals. The MMI enables convenient connection via plug connector.

Description	ID	
Connection caps		
DMI 070-V05-B	0307732	
MMI 070-V05-E-CN	0307500	
MMI 070-V05-D-CN	0307501	
MMI 070-V05-E-PB	0307502	
MMI 070-V05-D-PB	0307503	

ⓘ Further information and accessories can be found in the following displays.

DMI connection cap

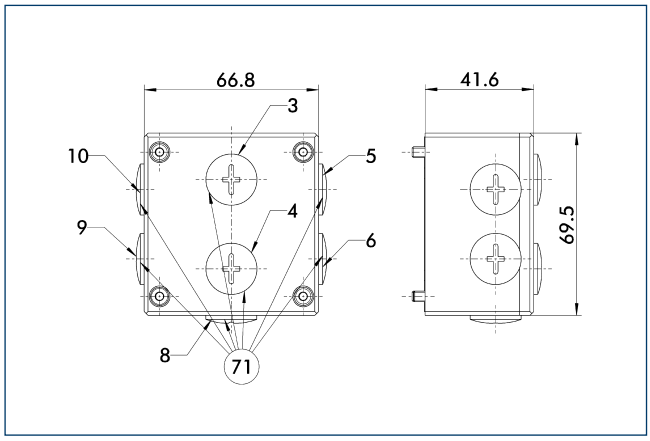

(71) M16x1.5 for cable guide penetrating screw connection

For the DMI the connection of the cable wires takes place via connection terminals. The DMI is prepared for Profibus and CAN bus communication interfaces.

Description	ID	
Connection caps		
DMI 070-V05-B	0307732	

MMI connection cap

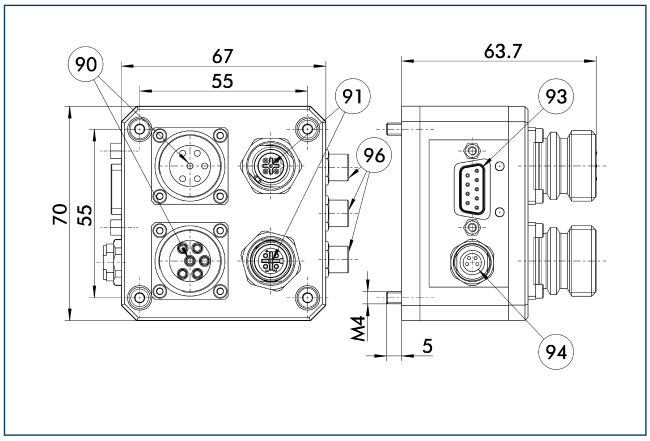

(90) Connection power supply (logic / load)
(91) Connection fieldbus M12
(93) Parametrized interface RS232
(94) Connection power supply service box (SSB)
(96) Connection ext. M8 limit switch or digital I/Os

The MMI is available with digital inputs and outputs (D) or prepared for external limit switches (E). The MMI is optionally available with the Profibus (PB) or CAN bus (CB) communication interfaces.

Description	ID	
Connection caps		
MMI 070-V05-E-CN	0307500	
MMI 070-V05-D-CN	0307501	
MMI 070-V05-E-PB	0307502	
MMI 070-V05-D-PB	0307503	

Power cable for SCHUNK MMI

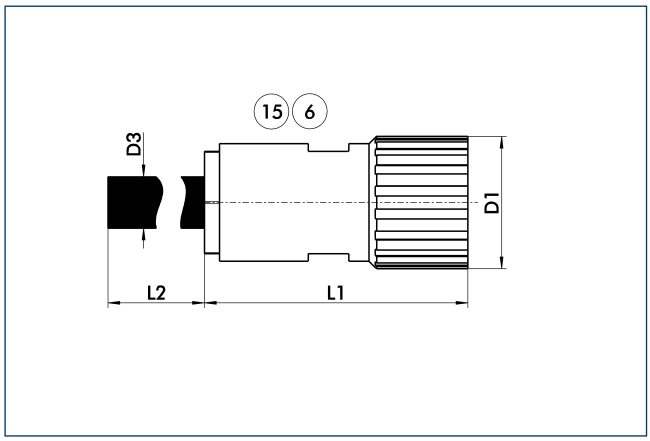

(6) Connection module side (15) Socket

The power cable for the MMI connection cab is available in various lengths (L2). The power cable has an M23 connection plug on the module side. The cable can be optionally fitted with a matching mating plug (GG) or open wires (GL) on the other side.

Description	ID	L_2 [m]	D_1
Power cable for SCHUNK MMI			
KA GGN2304-LK-00150-H	0349874	1.5	M23
KA GGN2304-LK-00300-H	0349875	3	M23
KA GGN2304-LK-00500-H	0349876	5	M23
KA GGN2304-LK-01000-H	0349877	10	M23
KA GLN2304-LK-00150-H	0349870	1.5	M23
KA GLN2304-LK-00300-H	0349871	3	M23
KA GLN2304-LK-00500-H	0349872	0.5	M23
KA GLN2304-LK-01000-H	0349873	1	M23

ⓘ Please observe the bending radius (7.5 times the cable diameter).

CAN bus cable

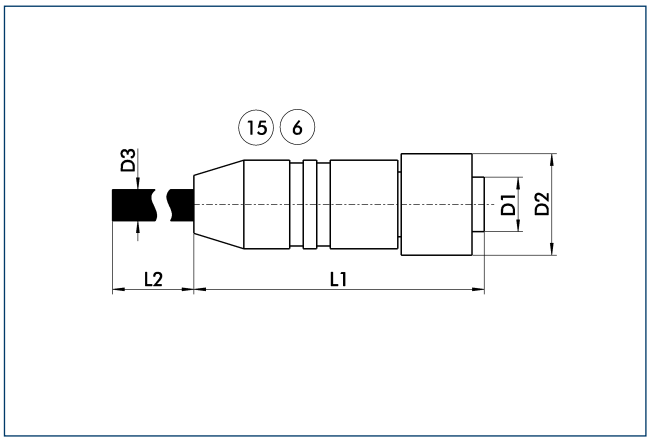

(6) Connection module side (15) Socket

The CAN bus cable is pre-assembled for our mechatronic modules with MMI connection cap and the RPH rotary module. It has an M12 connector plug on both sides.

Description	ID	L_2 [m]	D_1
CAN bus cable			
KA GGN1204-CN-00150-A	0349770	1.5	M12
KA GGN1204-CN-00300-A	0349771	3	M12
KA GGN1204-CN-00500-A	0349772	5	M12
KA GGN1204-CN-01000-A	0349773	10	M12

ⓘ Please observe the bending radius (7.5 times the cable diameter).

Profibus cable

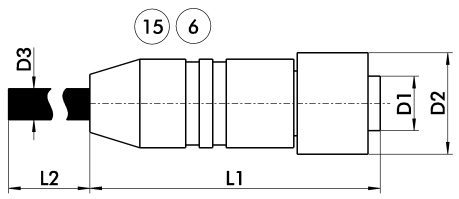

(6) Connection module side (15) Socket

The Profibus cable is pre-assembled for our mechatronic modules with MMI connection cap and PRH rotary module. It has an M12 connector plug on both sides.

Description	ID	L_2 [m]	D_1
Profibus cable			
KA GGN1204-PB-00150-A	0349750	1.5	M12
KA GGN1204-PB-00300-A	0349751	3	M12
KA GGN1204-PB-00500-A	0349752	5	M12
KA GGN1204-PB-01000-A	0349753	10	M12

ⓘ Please observe the bending radius (7.5 times the cable diameter).

Terminators

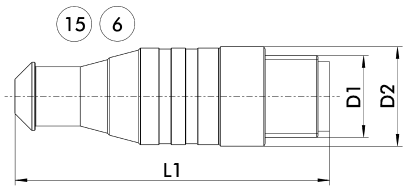

(6) Connection module side (15) Socket

The ST terminating resistors are provided for the termination of the bus string directly at the SCHUNK module. The terminating resistors are available for the Profibus (RB) or CAN bus (CN) bus systems.

Description	ID	D_1
Terminators		
ST SG1204-CN-A-A	0349660	M12
ST SG1204-PB-A-A	0349650	M12

ⓘ A suitable terminator must be mounted on the last module in the CAN or Profibus line.

PEH 50

SCHUNK Grippers electric | 2-Finger Parallel Grippers | Long-stroke Gripper

Gripping force, O.D. gripping

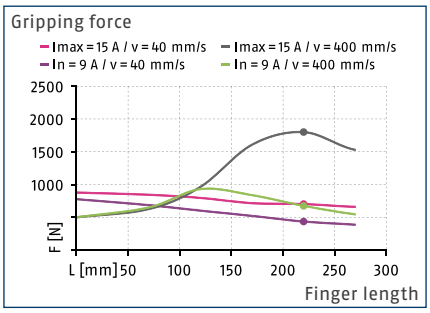

Speed

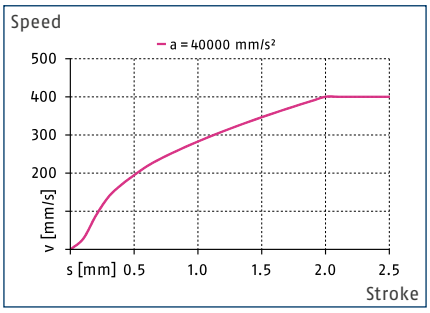

Finger load

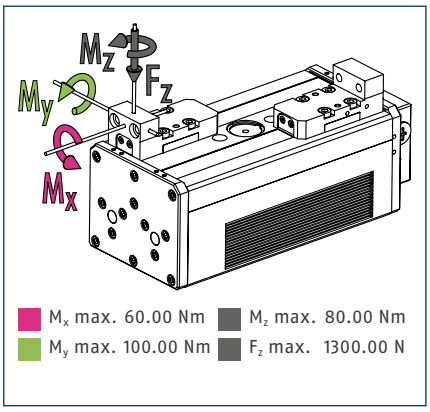

ⓘ The specified torques and forces are static values, apply for each base jaw, and may occur simultaneously. M_y may occur in addition to the torque generated by the gripping force.

Technical data

Description		PEH 50
ID		0306064
General operating data		
Stroke per jaw	[mm]	100
min. / max. gripping force	[N]	150/1800
Recommended workpiece weight	[kg]	9
max. permitted finger length	[mm]	270
max. permitted weight per finger	[kg]	4
Repeat accuracy	[mm]	±0.05
Closing- / opening time	[s]	1.5/1.5
max. speed	[mm/s]	400
max. acceleration	[mm/s²]	40000
Weight	[kg]	16.8
min. / max. ambient temperature	[°C]	5/45
IP class		41
Electrical operating data		
Controller electronics		integrated
Nominal voltage	[V DC]	24
Nominal current	[A]	10
max. power supply	[A]	25
Communication interface		Profibus, CAN bus, Digital I/O
Profibus interface	[Mbit/s]	1.5
CAN interface	[Mbit/s]	1
Number of digital inputs/outputs		4/4
Parametrized interface		RS232

ⓘ The recommended workpiece weight was calculated for the maximum gripping force. The maximum gripping force can be achieved at max. speed and with max. current, which may only be applied temporarily. Please contact SCHUNK technical sales for further enquiries.

Main view

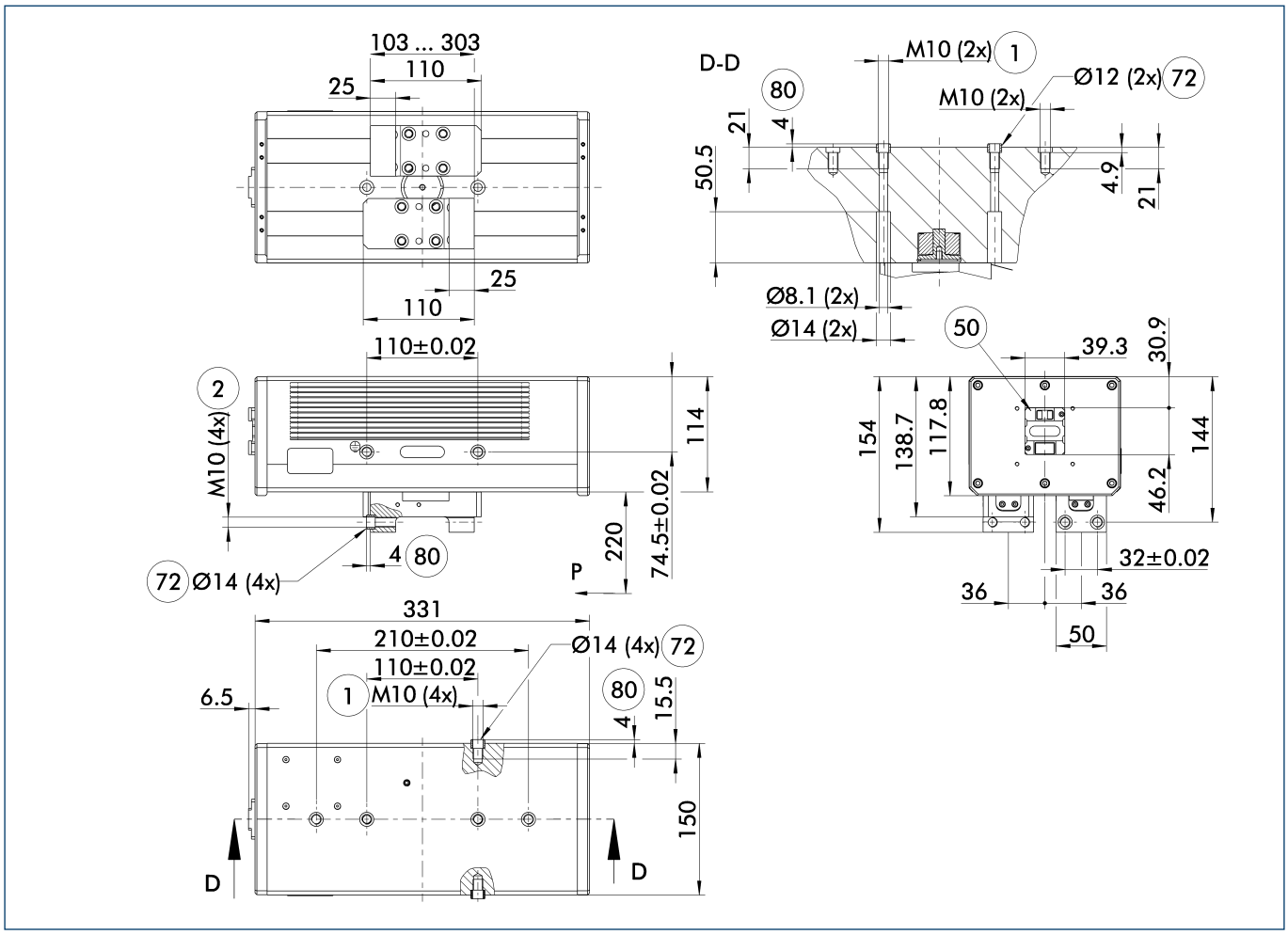

The drawing shows the gripper in the basic version with closed jaws, without dimensional consideration of the options described below.

1. Gripper connection
2. Finger connection
50. Electrical connection
72. Fit for centering sleeves
80. Depth of the centering sleeve hole in the mating part

Maximum permitted finger projection

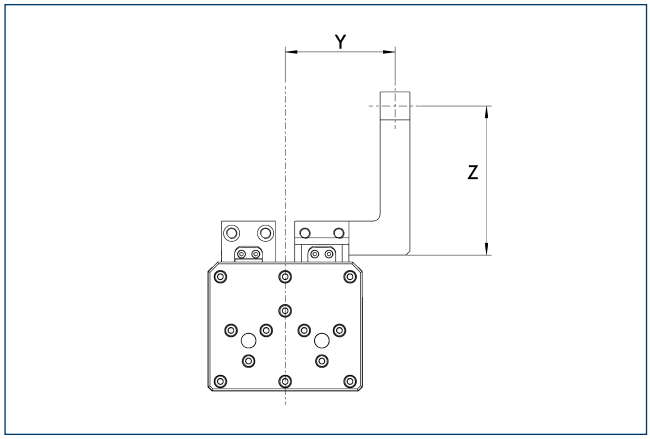

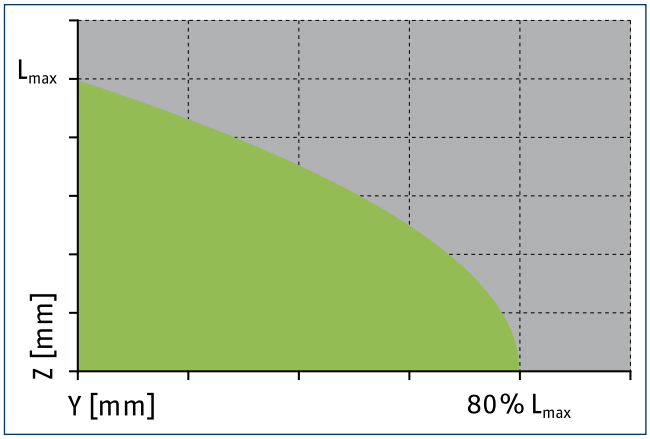

Permitted range

Inadmissible range

L_{max} is equivalent to the maximum permitted finger length, see the chart of technical specifications.

ZBA PFH 50 intermediate jaws

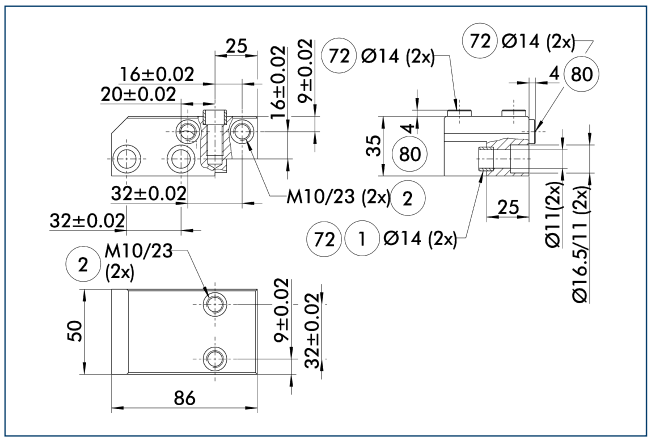

1 Gripper connection
2 Finger connection
72 Fit for centering sleeves
80 Depth of the centering sleeve hole in the mating part

Optionally intermediate jaws can be used, enabling direct connection and alignment of top jaws and various standard accessories in Z-direction.

Description	ID	Material	Scope of delivery
Intermediate jaws			
ZBA-PFH 50	0300222	Aluminum	2

Connection caps

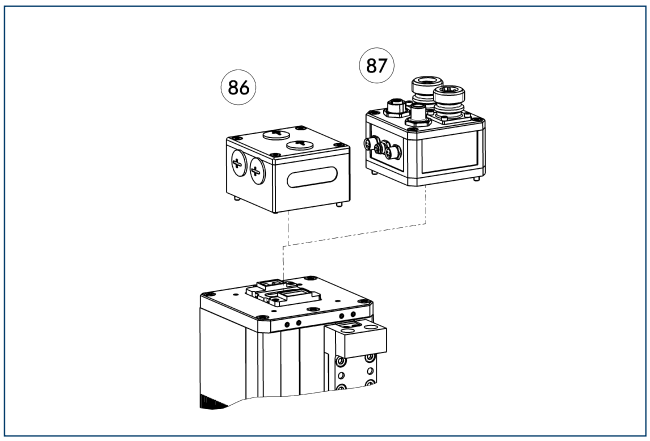

86 DMI connection cap
87 MMI connection cap

The DMI or MMI connection caps are required for connection of the modules to the voltage supply or superordinate control unit. For the DMI the connection of the cable wires takes place via connection terminals. The MMI enables convenient connection via plug connector.

Description	ID	
Connection caps		
DMI 070-V05-B	0307732	
MMI 070-V05-E-CN	0307500	
MMI 070-V05-D-CN	0307501	
MMI 070-V05-E-PB	0307502	
MMI 070-V05-D-PB	0307503	

ⓘ Further information and accessories can be found in the following displays.

DMI connection cap

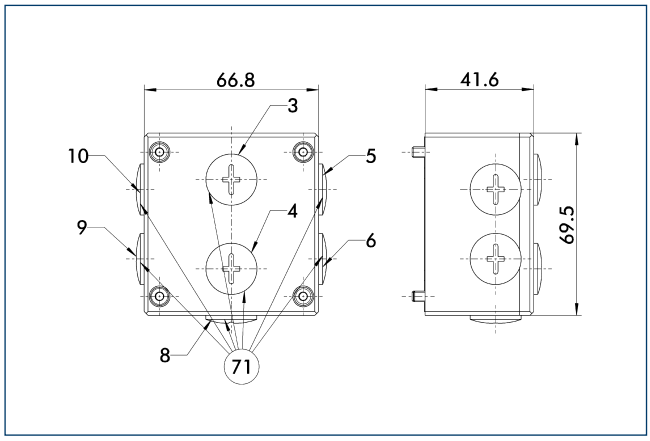

71 M16x1.5 for cable guide penetrating screw connection

For the DMI the connection of the cable wires takes place via connection terminals. The DMI is prepared for Profibus and CAN bus communication interfaces.

Description	ID	
Connection caps		
DMI 070-V05-B	0307732	

MMI connection cap

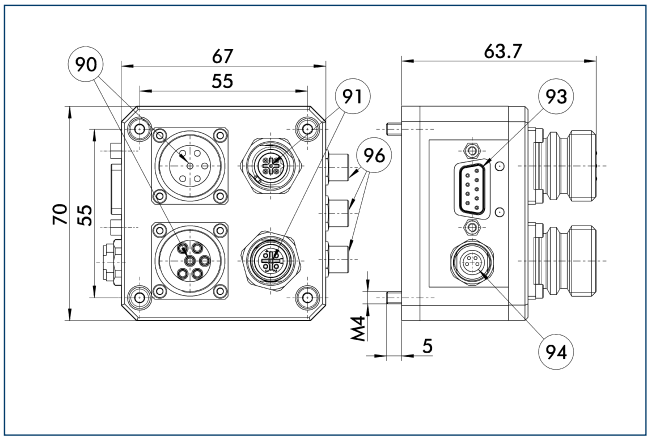

90 Connection power supply (logic / load)
91 Connection fieldbus M12
93 Parametrized interface RS232
94 Connection power supply service box (SSB)
96 Connection ext. M8 limit switch or digital I/Os

The MMI is available with digital inputs and outputs (D) or prepared for external limit switches (E). The MMI is optionally available with the Profibus (PB) or CAN bus (CB) communication interfaces.

Description	ID	
Connection caps		
MMI 070-V05-E-CN	0307500	
MMI 070-V05-D-CN	0307501	
MMI 070-V05-E-PB	0307502	
MMI 070-V05-D-PB	0307503	

Power cable for SCHUNK MMI

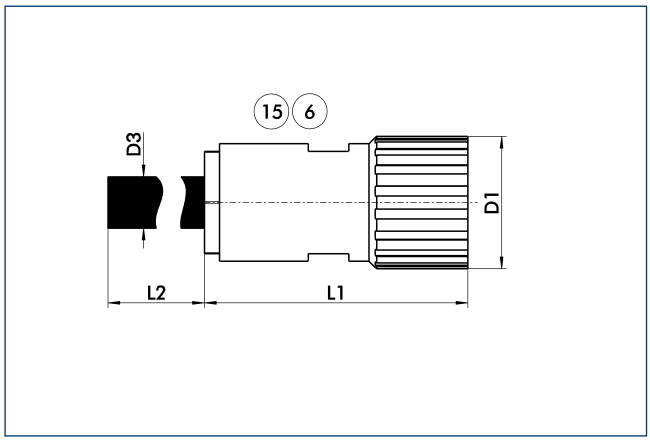

(6) Connection module side (15) Socket

The power cable for the MMI connection cab is available in various lengths (L2). The power cable has an M23 connection plug on the module side. The cable can be optionally fitted with a matching mating plug (GG) or open wires (GL) on the other side.

Description	ID	L_2 [m]	D_1
Power cable for SCHUNK MMI			
KA GGN2304-LK-00150-H	0349874	1.5	M23
KA GGN2304-LK-00300-H	0349875	3	M23
KA GGN2304-LK-00500-H	0349876	5	M23
KA GGN2304-LK-01000-H	0349877	10	M23
KA GLN2304-LK-00150-H	0349870	1.5	M23
KA GLN2304-LK-00300-H	0349871	3	M23
KA GLN2304-LK-00500-H	0349872	0.5	M23
KA GLN2304-LK-01000-H	0349873	1	M23

ⓘ Please observe the bending radius (7.5 times the cable diameter).

CAN bus cable

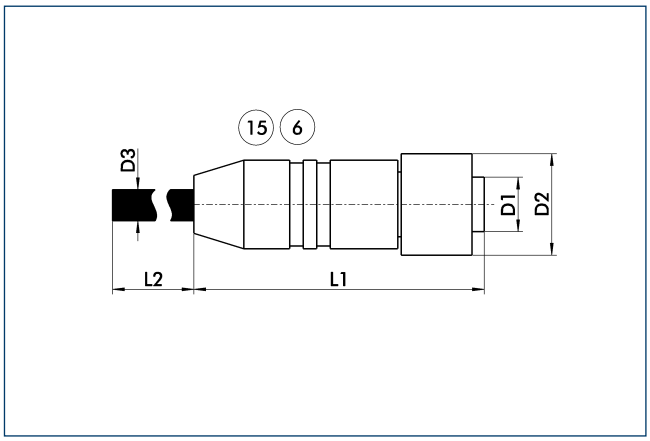

(6) Connection module side (15) Socket

The CAN bus cable is pre-assembled for our mechatronic modules with MMI connection cap and the RPH rotary module. It has an M12 connector plug on both sides.

Description	ID	L_2 [m]	D_1
CAN bus cable			
KA GGN1204-CN-00150-A	0349770	1.5	M12
KA GGN1204-CN-00300-A	0349771	3	M12
KA GGN1204-CN-00500-A	0349772	5	M12
KA GGN1204-CN-01000-A	0349773	10	M12

ⓘ Please observe the bending radius (7.5 times the cable diameter).

Profibus cable

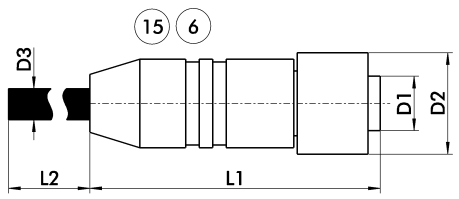

(6) Connection module side (15) Socket

The Profibus cable is pre-assembled for our mechatronic modules with MMI connection cap and PRH rotary module. It has an M12 connector plug on both sides.

Description	ID	L_2 [m]	D_1
Profibus cable			
KA GGN1204-PB-00150-A	0349750	1.5	M12
KA GGN1204-PB-00300-A	0349751	3	M12
KA GGN1204-PB-00500-A	0349752	5	M12
KA GGN1204-PB-01000-A	0349753	10	M12

ⓘ Please observe the bending radius (7.5 times the cable diameter).

Terminators

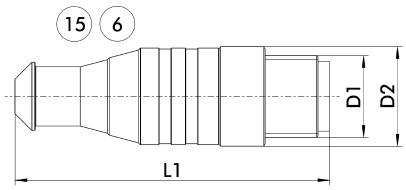

(6) Connection module side (15) Socket

The ST terminating resistors are provided for the termination of the bus string directly at the SCHUNK module. The terminating resistors are available for the Profibus (RB) or CAN bus (CN) bus systems.

Description	ID	D_1
Terminators		
ST SG1204-CN-A-A	0349660	M12
ST SG1204-PB-A-A	0349650	M12

ⓘ A suitable terminator must be mounted on the last module in the CAN or Profibus line.

Modular. Adaptable. Robust.

EGA Long-stroke Gripper

Electric 2-finger parallel gripper with adaptable servo motor

Field of Application

Optimal standard solution for many fields of application. Universal application in clean and slightly dirty surroundings in for example machine building and plant building industry, assembly and handling as well as automotive industry.

Advantages – Your benefit

Modular drive concept compatible with standard robot control units with flexibility to accommodate the widest range of motors

Radial motor and parallel assembly for optimal adaptation to portals or robots

Extremely flat design for compact dimensions and fewer interfering contours

Fastening at one gripper side in two screw directions for universal and flexible gripper assembly

Transfer of fieldbus and safety technology (STO, SLS) by using a suitable client motor

High efficiency by linear bearing and ball screw

Sizes	Weight	Gripping force	Stroke per jaw	Workpiece weight
Quantity: 2	1.8 .. 11.2 kg	500 .. 1300 N	30 .. 100 mm	2.5 .. 6.5 kg

Functional Description

The adaptable servo motor drives the base jaw via the gear spindle mechanism.

The jaw stroke is synchronized by means of rack and pinion kinematics.

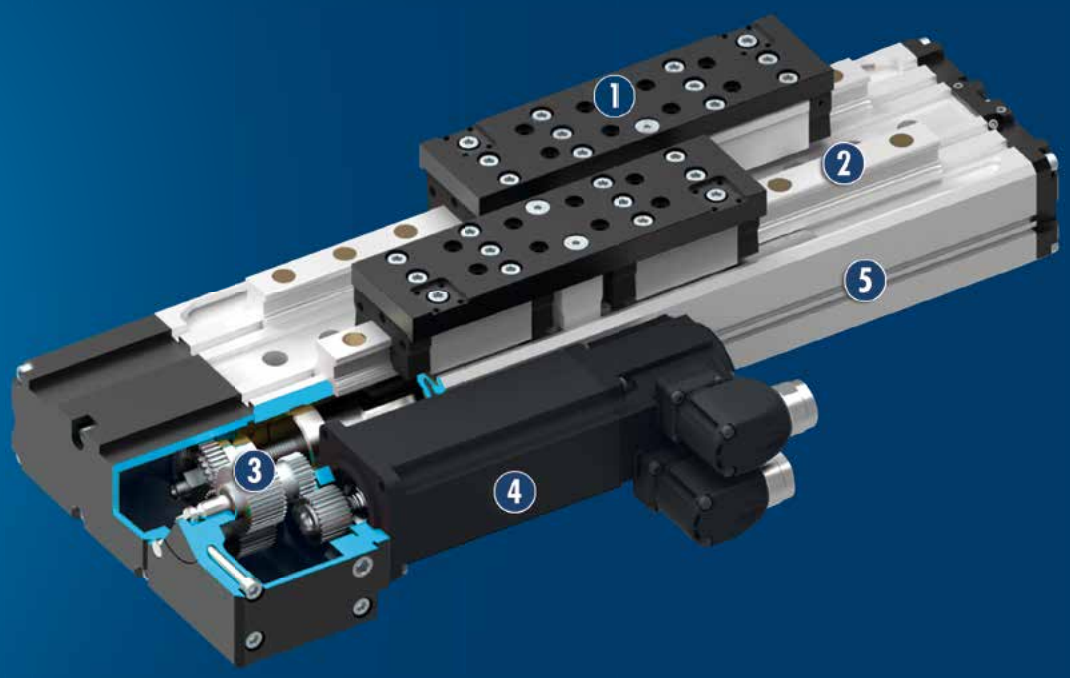

① **Base jaw**
for the connection of workpiece-specific gripper fingers

② **Profiled rail guide**
Precise gripping through base jaw guide with minimum play

③ **Special gear drive**
for two different motor attachment variants

④ **Drive**
Adaptable drive

⑤ **Housing**
With extremely flat design for low interfering contours

CAD data, operating manuals and other current product documents are available at **www.schunk.com**

General Notes about the Series

Operating principle: Spindle drive, synchronized by rack and pinion principle

Housing material: Aluminum alloy, coated

Base jaw material: hard-anodized, high strength aluminum

Actuation: electrically via an adaptable servo drive

Warranty: 24 months (details, general terms and conditions and operating manuals can be downloaded at www.schunk.com)

Scope of delivery: Enclosed pack with centering sleeve, assembly and operating manual with declaration of incorporation. Depending on the variant, operation of the gripper requires a motor add-on kit, a servo motor and a suitable controller. They are not included in the scope of delivery and must be ordered separately.

Gripping force: is the arithmetic total of the gripping force applied to each gripper jaw at distance P (see illustration).

Finger length: measured from the screw surface of the base jaw in the direction of the main axis. Failure to comply with the max. permissible finger length can lead to increased wear.

Repeat accuracy: is defined as the spread of the limit position after 100 consecutive strokes.

Workpiece weight: is calculated for a force-fit connection with a coefficient of friction of 0.1 and a safety factor of 2 against slippage of the workpiece on acceleration due to gravity g. Considerably heavier workpiece weights are permitted with form-fit gripping.

Closing and opening times: When gripping, the speed must be adapted as described in the operating manual so that the closing and opening times can increase. The times specified are only the movement times of the base jaws at max. speed, max. acceleration without electrical restrictions and observance of the maximum permissible masses per finger.

Motor torque: Required motor torque may be permanently applied to achieve the maximum gripping force.

Application example

Completely electrically powered axis gantry for loading and unloading pallets with various greatly differing components.

1. LPE Line Gantry electric
2. EGA 2-Finger Long-stroke Gripper

SCHUNK offers more ...

The following components make the product EGA even more productive – the suitable addition for the highest functionality, flexibility, reliability, and controlled production.

RPE Room Gantry electric

LPE Line Gantry electric

Beta electrical Linear Module

Inductive Proximity Sensor

Motor

ERS Rotary Actuator

MMS Magnetic Switch

ERM Electric Rotary Module

Finger Blanks with Jaw Quick-change System

ZHU Centering Sleeves

BSWS Jaw Quick-change System

FMS Force Measuring Jaws

ⓘ Further information regarding the products can be found on the following product pages or at www.schunk.com. Please contact us for further information: SCHUNK technical hotline +49-7133-103-2696

Options and special Information

Flexible in choice of motor and controller: The electrical control is carried out via an adaptable servo drive using common standard controller like Bosch or Siemens
Easy integration: Due to the possibility to adapt a common servo motor, the simple integration into the control system is guaranteed, using the advantages of the certain customer controller.
Identical control: Like a normal servo axis, the gripper can be controlled directly and interpolated with existing axes.

EGA 25

SCHUNK Grippers electric | 2-Finger Parallel Grippers | Long-stroke Gripper

Gripping force

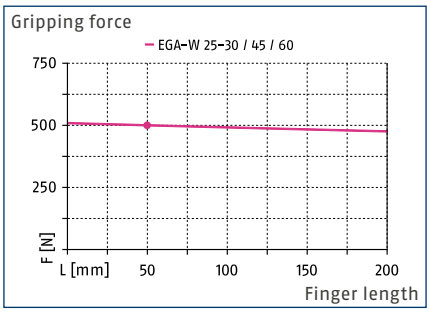

Finger load

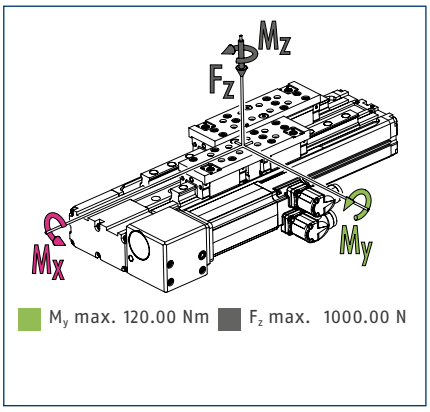

ⓘ The indicated moments and forces are statical values, apply for each base jaw and should not appear simultaneously. M_y may occur in addition to the torque generated by the gripping force.

Technical data

Parallel basic version		EGA-W 25-030-P-N-B	EGA-W 25-045-P-N-B	EGA-W 25-060-P-N-B
ID		0332000	0332010	0332020
General operating data				
Stroke per jaw	[mm]	30	45	60
min. / max. gripping force	[N]	150/500	150/500	150/500
max. permissible speed positioning	[mm/s]	80	80	80
max. permissible power operation speed	[mm/s]	30	30	30
Recommended workpiece weight	[kg]	2.5	2.5	2.5
Repeat accuracy	[mm]	0.05	0.05	0.05
max. permitted finger length	[mm]	200	200	200
max. permitted weight per finger	[kg]	1	1	1
Motor moment required	[Nm]	0.28	0.28	0.28
Motor speed required	[1/min]	2200	2200	2200
Weight	[kg]	2.2	2.4	2.7
min. / max. ambient temperature	[°C]	5/55	5/55	5/55
IP class		40	40	40
Moments M_x max./M_z max.	[Nm]	25.00/27.00	29.00/33.00	33.00/46.00
Options and their characteristics				
Parallel motor version		EGA-W 25-030-P-N-MSK030B	EGA-W 25-045-P-N-MSK030B	EGA-W 25-060-P-N-MSK030B
ID		0332001	0332011	0332021
Weight	[kg]	3.9	4.1	4.4
Radial motor version		EGA-W 25-030-R-N-MSK030B	EGA-W 25-045-R-N-MSK030B	EGA-W 25-060-R-N-MSK030B
ID		0332006	0332016	0332026
Weight	[kg]	3.5	3.8	4
Radial basic version		EGA-W 25-030-R-N-B	EGA-W 25-045-R-N-B	EGA-W 25-060-R-N-B
ID		0332005	0332015	0332025
Weight	[kg]	1.8	2.1	2.3

Main view

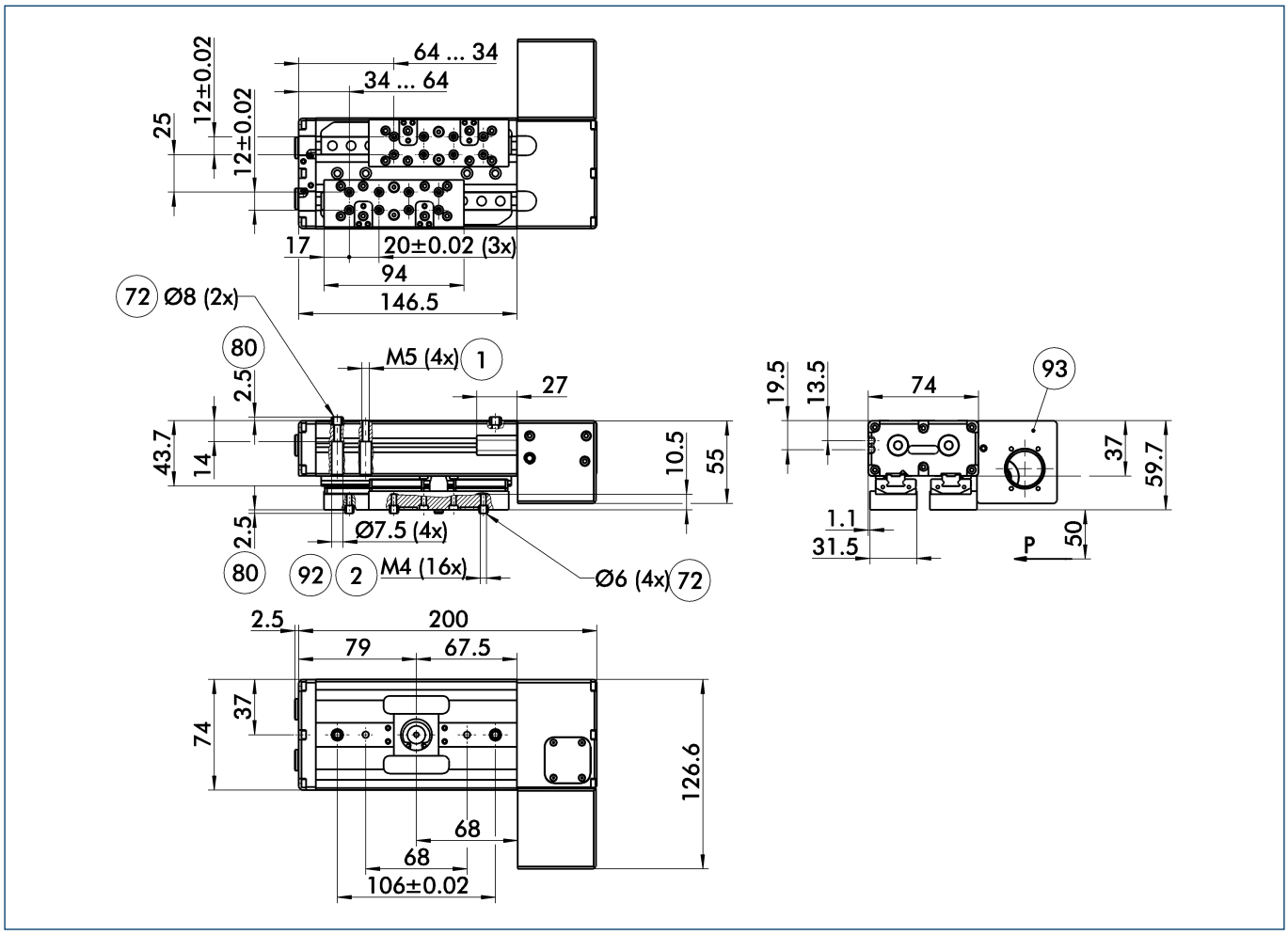

The drawing shows the gripper in the basic version with closed jaws, without dimensional consideration of the options described below.

1. Gripper connection
2. Finger connection
72. Fit for centering sleeves
80. Depth of the centering sleeve hole in the mating part
92. Min. six screws per base jaw
93. Gear box for parallel motor mounting (not applicable for radial motor mounting)

Maximum permitted finger projection

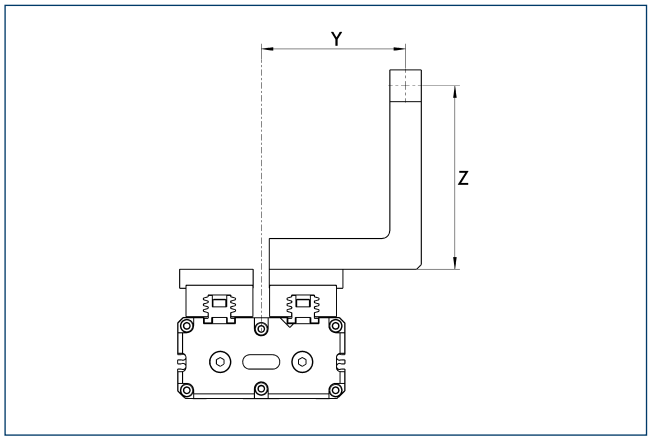

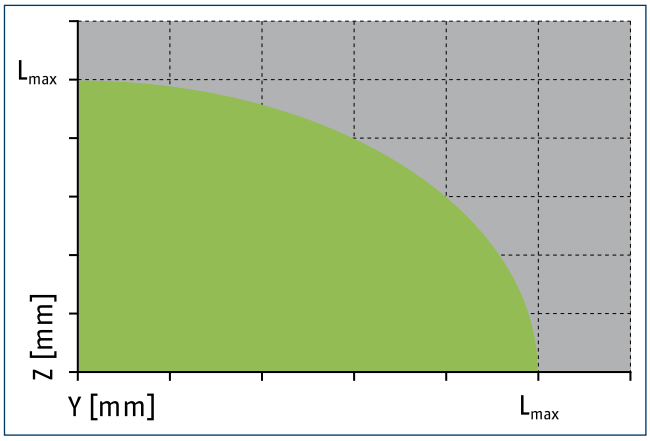

Permitted range

Inadmissible range

L_{max} is equivalent to the maximum permitted finger length, see the chart of technical specifications.

Stroke version EGA 25-045

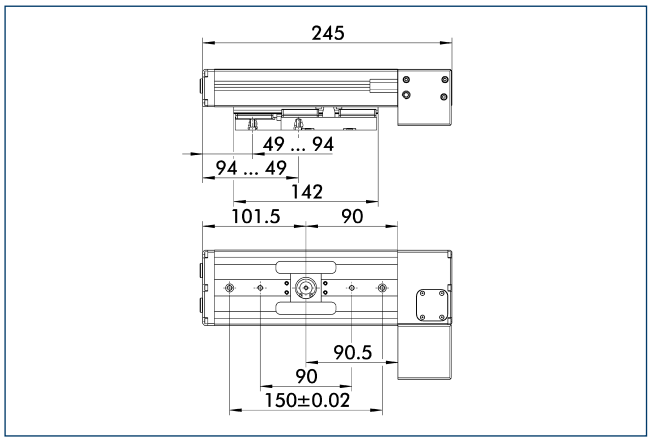

The drawing shows changes in dimensions of the versions with a differing stroke compared to the main view of the shown version.

Stroke version EGA 25-060

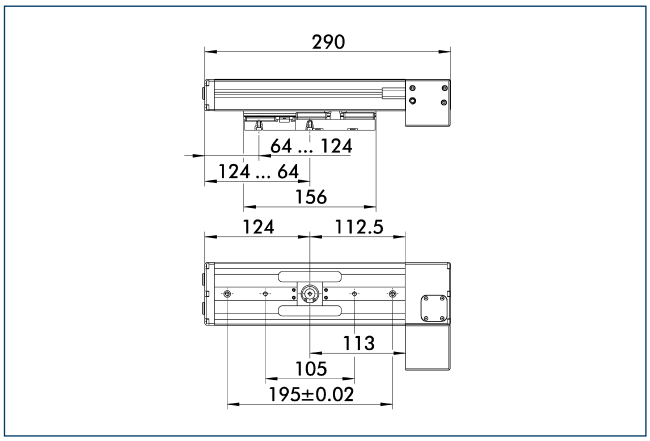

The drawing shows changes in dimensions of the versions with a differing stroke compared to the main view of the shown version.

Motor version EGA parallel

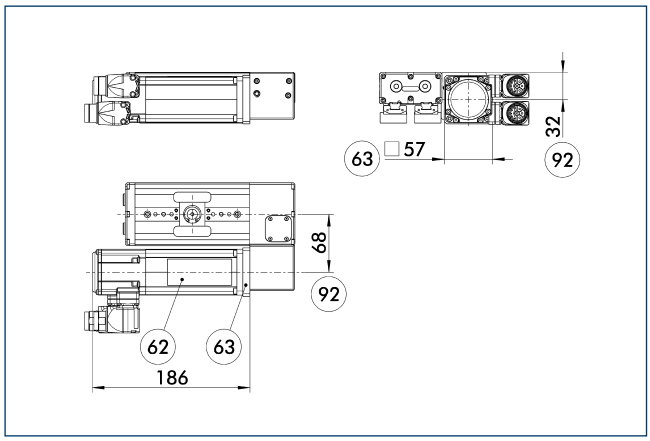

62 Servo motor
63 Motor add-on kit
92 Motor and adapter connection position

The drawing shows the gripper in the variant with attached motor, as well as the exact position for motor adaptation.

Motor version EGA radial

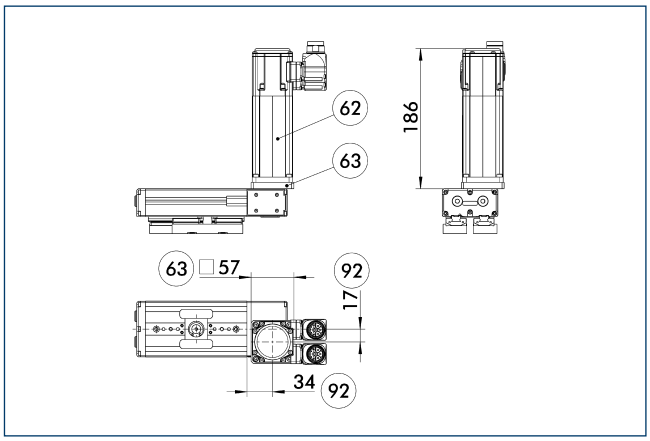

62 Servo motor
63 Motor add-on kit
92 Motor and adapter connection position

The drawing shows the gripper in the variant with attached motor, as well as the exact position for motor adaptation.

Motor add-on kits

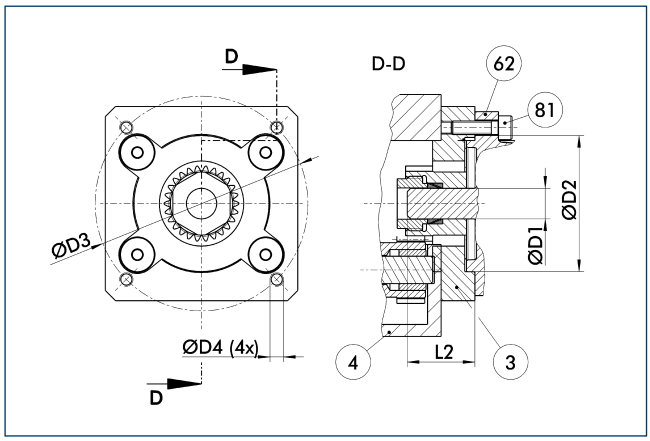

(3) Adapter
(4) Gripper
(62) Servo motor
(81) Not included in the scope of delivery

Description	ID	D_1 [mm]	D_2 [mm]	D_3 [mm]	D_4	L_2 min/max [mm]
Motor add-on kits						
MAS-EGA 25-09-040-063-M04	0332033	9	40	63	M4	18/21.5
MAS-EGA 25-09-040-063-M05	0332034	9	40	63	M5	18/21.5
MAS-EGA 25-09-050-070-M05	0332035	9	50	70	M5	22/25.5

Intermediate jaw interface

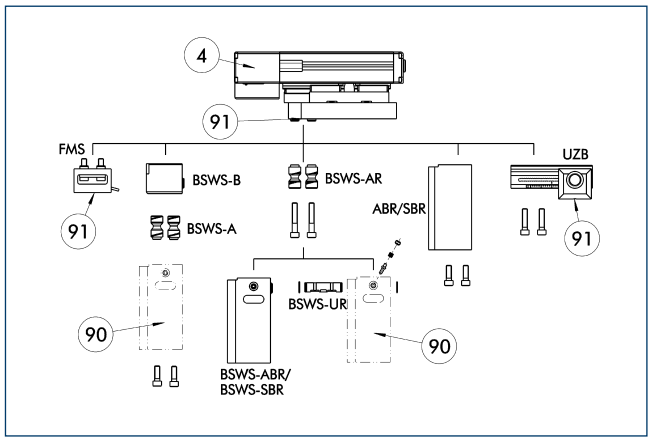

(4) Gripper
(90) Customized gripper fingers
(91) Uniform screw connection pattern

By using the intermediate jaw, you have the possibility of directly connecting a wide range of accessories directly. This includes force measuring jaws, jaw quick-change systems, finger blanks, and universal intermediate jaws.

ZBH PHL 25 intermediate jaws

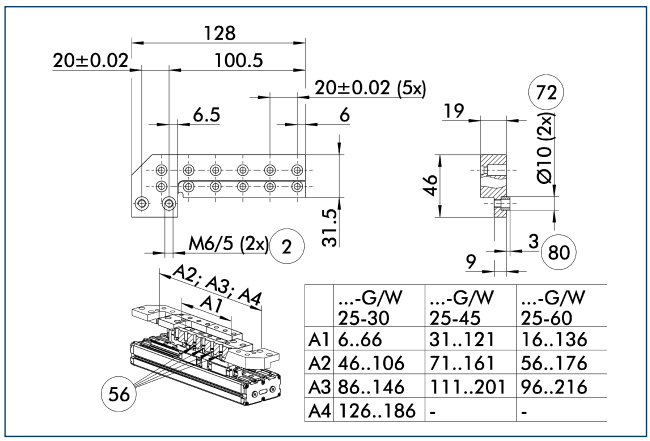

	...-G/W 25-30	...-G/W 25-45	...-G/W 25-60
A1	6..66	31..121	16..136
A2	46..106	71..161	56..176
A3	86..146	111..201	96..216
A4	126..186	-	-

(2) Finger connection
(56) Included in delivery
(72) Fit for centering sleeves
(80) Depth of the centering sleeve hole in the mating part

Optionally intermediate jaws can be used, enabling direct connection and alignment of top jaws and various standard accessories in Z-direction.

Description	ID	Material	Scope of delivery
Intermediate jaws			
ZBA-PHL 25	0308129	Aluminum	2

Mounting kit for proximity switch

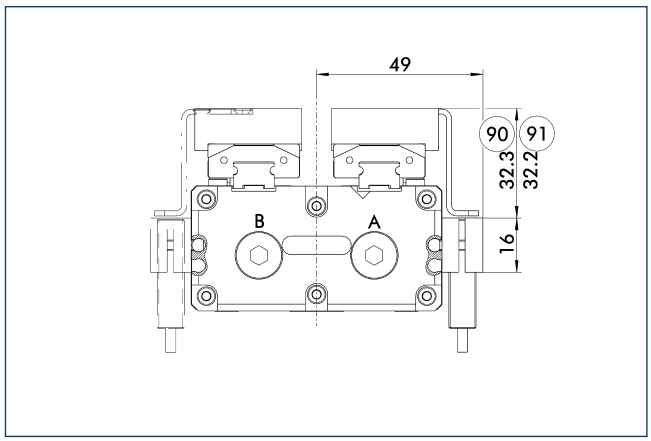

(90) Height of version G
(91) Height of version W

Limit position monitor can be mounted with mounting kit.

Description	ID	
Mounting kit for proximity switch		
AS-PHL025-IN80	0308830	

ⓘ This mounting kit needs to be ordered optionally as an accessory.

IN 80 inductive proximity switches

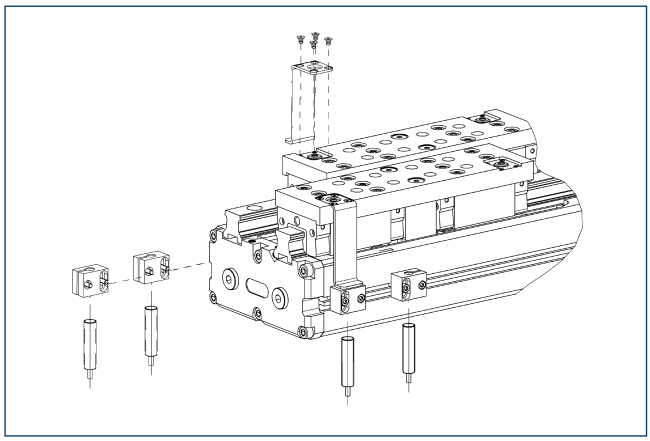

Limit position monitor can be mounted with mounting kit.

Description	ID	Often combined
Mounting kit for proximity switch		
AS-PHL025-IN80	0308830	
Inductive proximity switches		
IN 80-S-M12	0301578	
IN 80-S-M8	0301478	●
INK 80-S	0301550	
Cable extensions		
KV BG12-SG12 3P-0030-PNP	0301999	
KV BG12-SG12 3P-0060-PNP	0301998	
KV BW08-SG08 3P-0030-PNP	0301495	
KV BW08-SG08 3P-0100-PNP	0301496	
KV BW08-SG08 3P-0200-PNP	0301497	●
KV BW12-SG12 3P-0030-PNP	0301595	
KV BW12-SG12 3P-0100-PNP	0301596	
KV BW12-SG12 3P-0200-PNP	0301597	
Clip for plug / socket		
CLI-M12	0301464	
CLI-M8	0301463	
Connection cables		
KA BG08-L 3P-0300-PNP	0301622	●
KA BG08-L 3P-0500-PNP	0301623	
KA BG12-L 3P-0500-PNP	30016369	
KA BW08-L 3P-0300-PNP	0301594	
KA BW08-L 3P-0500-PNP	0301502	
KA BW12-L 3P-0300-PNP	0301503	
KA BW12-L 3P-0500-PNP	0301507	
Sensor distributor		
V2-M8	0301775	●
V2-M12	0301776	●
V4-M12	0301747	
V4-M8	0301746	
V8-M12	0301752	
V8-M8	0301751	

ⓘ Two sensors (closer/S) are required for each unit, plus extension cables as an option. This mounting kit needs to be ordered optionally as an accessory. Please note the minimum permitted bending radii for the sensor cables, which are generally 35 mm.

MMS electronic magnetic switches

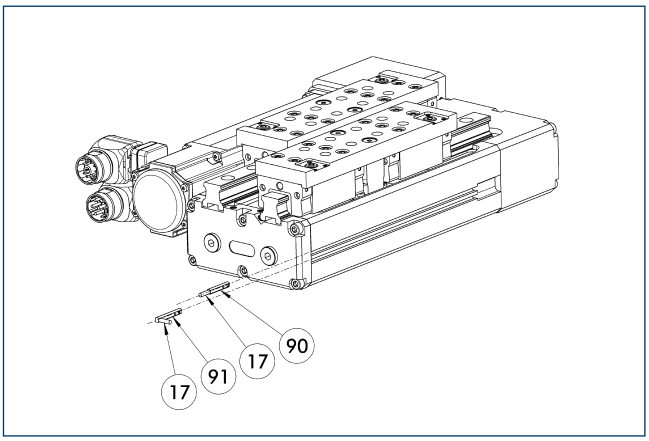

(17) Cable outlet
(91) MMS 22...-SA sensor
(90) MMS 22... sensor

End position monitoring for mounting in the C-slot.

Description	ID	Often combined
MMS electronic magnetic switches		
MMS 22-S-M8-PNP	0301032	●
MMSK 22-S-PNP	0301034	
MMS electronic magnetic switches with lateral cable outlet		
MMS 22-S-M8-PNP-SA	0301042	●
MMSK 22-S-PNP-SA	0301044	
Cable extensions		
KV BW08-SG08 3P-0030-PNP	0301495	
KV BW08-SG08 3P-0100-PNP	0301496	
KV BW08-SG08 3P-0200-PNP	0301497	●
Clip for plug / socket		
CLI-M8	0301463	
Connection cables		
KA BG08-L 3P-0300-PNP	0301622	●
KA BG08-L 3P-0500-PNP	0301623	
KA BW08-L 3P-0300-PNP	0301594	
KA BW08-L 3P-0500-PNP	0301502	
Sensor distributor		
V2-M8	0301775	●
V4-M8	0301746	
V8-M8	0301751	

ⓘ Two sensors (closer/S) are required for each unit, plus extension cables as an option. Please note the minimum permitted bending radii for the sensor cables, which are generally 35 mm.

MMS PI1 programmable magnetic switches

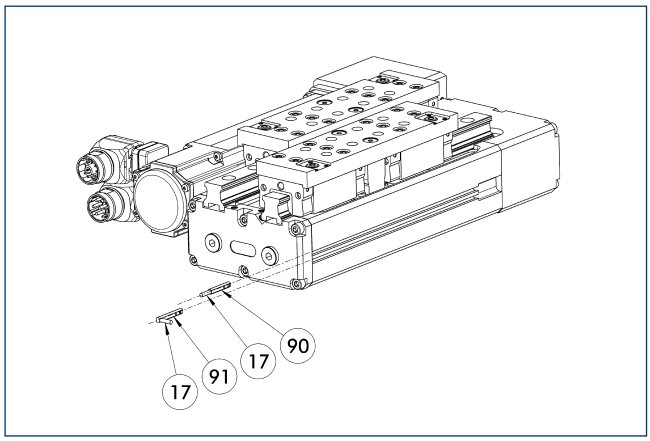

17 Cable outlet
91 MMS 22...-PI1-...-SA sensor
90 MMS 22...-PI1-... sensor

Position query with one programmable position per sensor and electronics integrated in sensor. Programmable via MT magnet teaching tool (included in the scope of delivery) or ST plug teaching tool (optional). Limit position query mounted in C-groove. If the ST plug teaching tools are listed in the table, teaching can only take place with the ST plug teaching tools.

Description	ID	Often combined
MMS PI1 programmable magnetic switches		
MMS 22-PI1-S-M8-PNP	0301160	●
MMSK 22-PI1-S-PNP	0301162	
MMS PI1-HD programmable magnetic switches with stainless steel housing		
MMS 22-PI1-S-M8-PNP-HD	0301110	●
MMSK 22-PI1-S-PNP-HD	0301112	
MMS PI1 programmable magnetic switches with lateral cable outlet		
MMS 22-PI1-S-M8-PNP-SA	0301166	●
MMSK 22-PI1-S-PNP-SA	0301168	

ⓘ Two sensors (closer/S) are required for each unit, plus extension cables as an option. Please note the minimum permitted bending radii for the sensor cables, which are generally 35 mm. Connection cable, cable extensions, and sensor distributors can be found in the table for the MMS 22.

EGA 40

SCHUNK Grippers electric | 2-Finger Parallel Grippers | Long-stroke Gripper

Gripping force

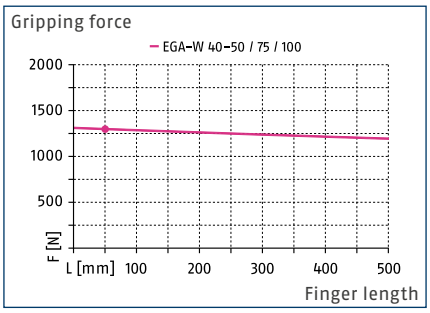

Finger load

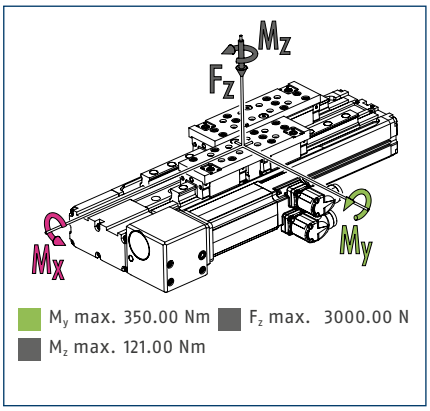

ⓘ The indicated moments and forces are statical values, apply for each base jaw and should not appear simultaneously. M_y may occur in addition to the torque generated by the gripping force.

Technical data

Parallel basic version		EGA-W 40-050-P-N-B	EGA-W 40-075-P-N-B	EGA-W 40-100-P-N-B
ID		0332040	0332050	0332060
General operating data				
Stroke per jaw	[mm]	50	75	100
min. / max. gripping force	[N]	125/1300	125/1300	125/1300
max. permissible speed positioning	[mm/s]	80	80	80
max. permissible power operation speed	[mm/s]	30	30	30
Recommended workpiece weight	[kg]	6.5	6.5	6.5
Repeat accuracy	[mm]	0.05	0.05	0.05
max. permitted finger length	[mm]	500	500	500
max. permitted weight per finger	[kg]	5	5	5
Motor moment required	[Nm]	0.8	0.8	0.8
Motor speed required	[1/min]	1970	1970	1970
Weight	[kg]	7.4	8.2	9
min. / max. ambient temperature	[°C]	5/55	5/55	5/55
IP class		40	40	40
Moments M_x max.	[Nm]	100.00	117.00	133.00
Options and their characteristics				
Parallel motor version		EGA-W 40-050-P-N-MSK030C	EGA-W 40-075-P-N-MSK030C	EGA-W 40-100-P-N-MSK030C
ID		0332041	0332051	0332061
Weight	[kg]	9.6	10.4	11.2
Radial motor version		EGA-W 40-050-R-N-MSK030C	EGA-W 40-075-R-N-MSK030C	EGA-W 40-100-R-N-MSK030C
ID		0332046	0332056	0332066
Weight	[kg]	8.7	9.5	10.3
Radial basic version		EGA-W 40-050-R-N-B	EGA-W 40-075-R-N-B	EGA-W 40-100-R-N-B
ID		0332045	0332055	0332065
Weight	[kg]	6.5	7.3	8.1

Main view

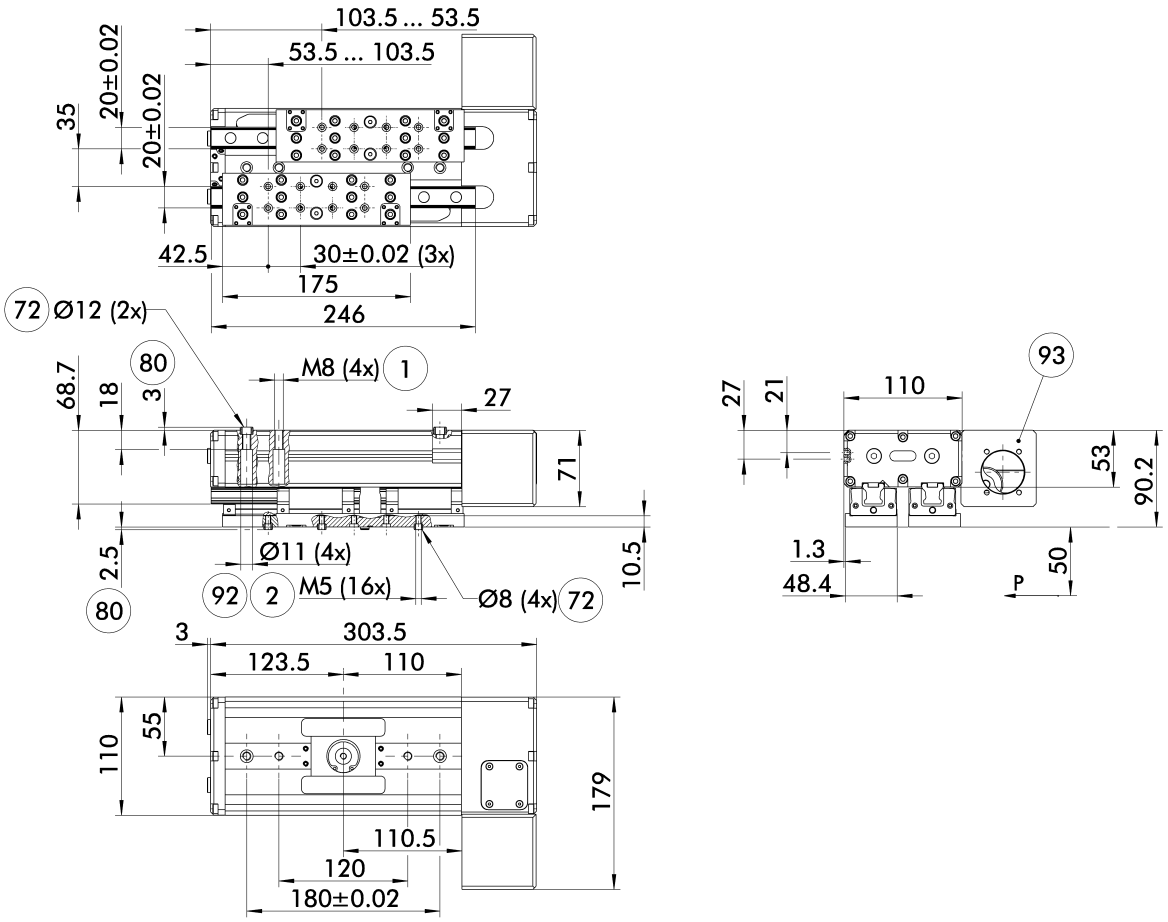

The drawing shows the basic version of the gripper with open jaws, without dimensional consideration of the options described below.

1. Gripper connection
2. Finger connection
72. Fit for centering sleeves
80. Depth of the centering sleeve hole in the mating part
92. Min. six screws per base jaw
93. Gear box for parallel motor mounting (not applicable for radial motor mounting)

Maximum permitted finger projection

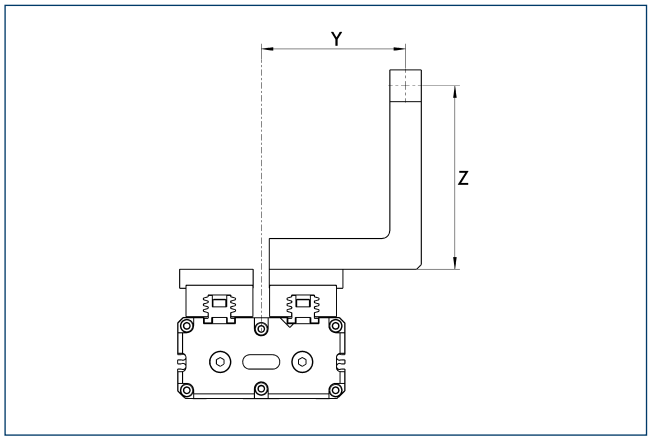

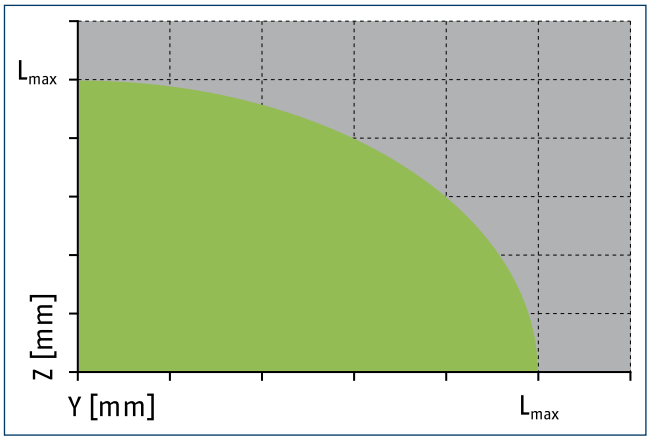

Permitted range

Inadmissible range

L_{max} is equivalent to the maximum permitted finger length, see the chart of technical specifications.

Stroke version EGA 40-075

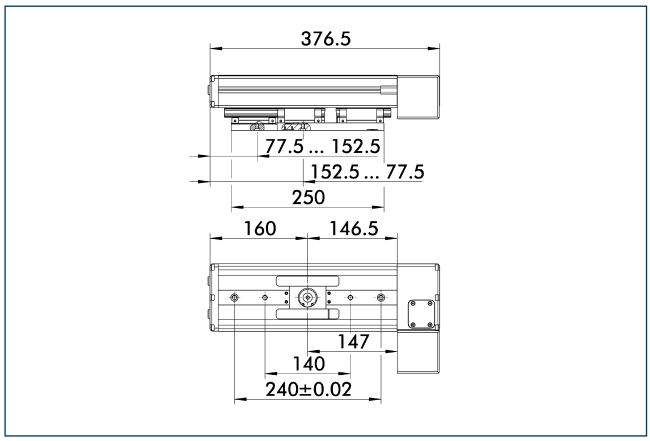

The drawing shows changes in dimensions of the versions with a differing stroke compared to the main view of the shown version.

Stroke version EGA 40-100

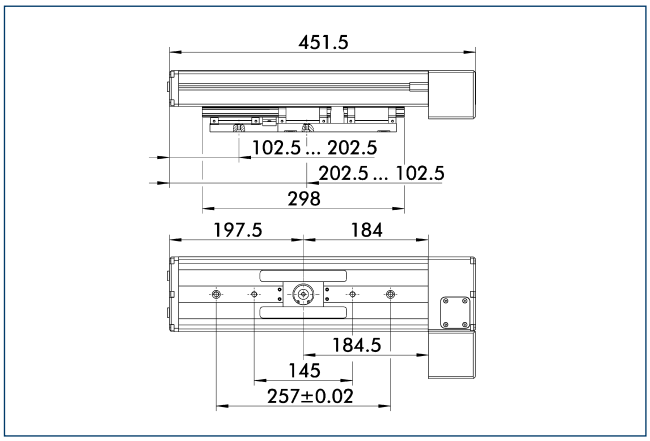

The drawing shows changes in dimensions of the versions with a differing stroke compared to the main view of the shown version.

Motor version EGA parallel

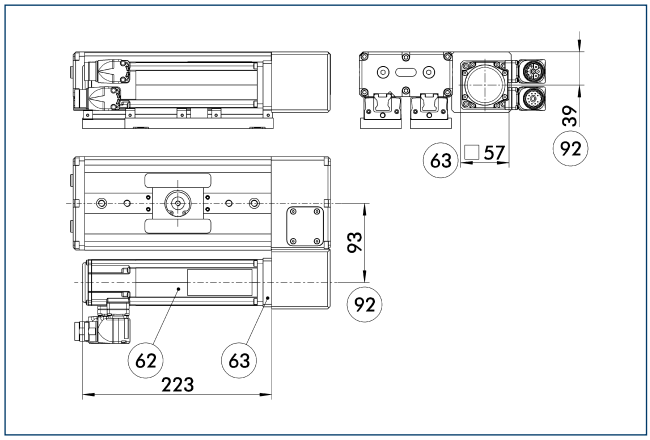

62 Servo motor
63 Motor add-on kit
92 Motor and adapter connection position

The drawing shows the gripper in the variant with attached motor, as well as the exact position for motor adaptation.

Motor version EGA radial

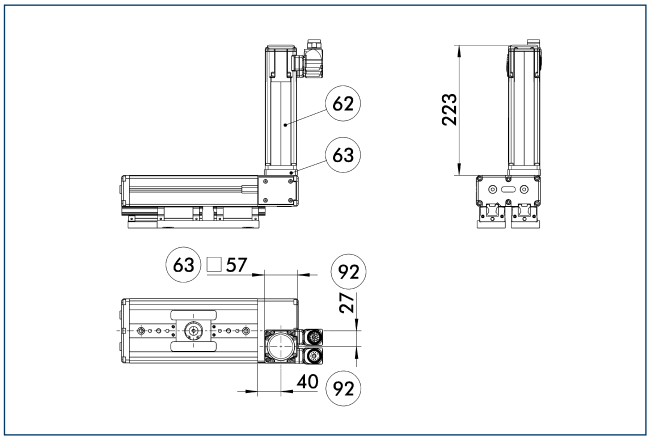

62 Servo motor
63 Motor add-on kit
92 Motor and adapter connection position

The drawing shows the gripper in the variant with attached motor, as well as the exact position for motor adaptation.

Motor add-on kits

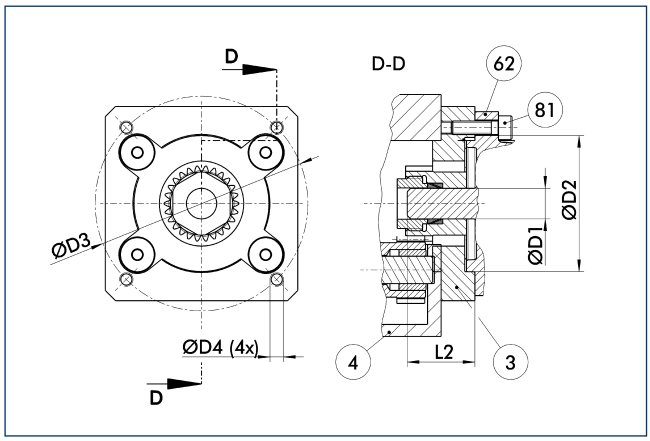

(3) Adapter
(4) Gripper
(62) Servo motor
(81) Not included in the scope of delivery

Description	ID	D_1 [mm]	D_2 [mm]	D_3 [mm]	D_4	L_2 min/max [mm]
Motor add-on kits						
MAS-EGA 40-09-040-063-M04	0332070	9	40	63	M4	20/25.5
MAS-EGA 40-09-040-063-M05	0332071	9	40	63	M5	20/25.5
MAS-EGA 40-09-050-070-M05	0332072	9	50	70	M5	22/27.5

Intermediate jaw interface

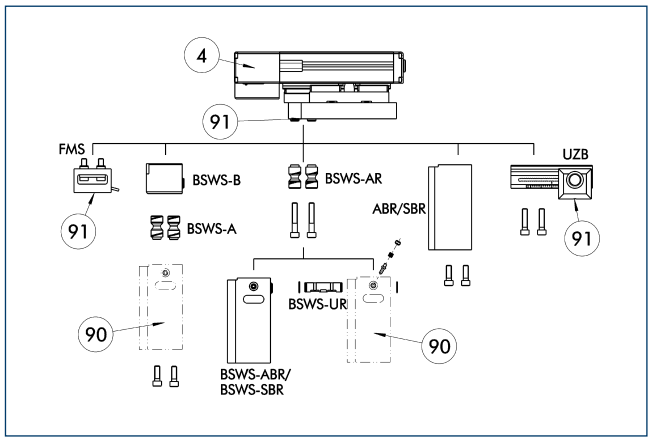

(4) Gripper
(90) Customized gripper fingers
(91) Uniform screw connection pattern

By using the intermediate jaw, you have the possibility of directly connecting a wide range of accessories directly. This includes force measuring jaws, jaw quick-change systems, finger blanks, and universal intermediate jaws.

ZBA PHL 40 intermediate jaws

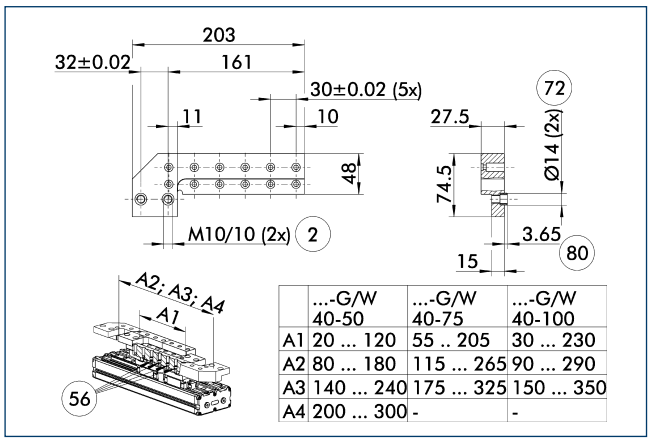

	...-G/W 40-50	...-G/W 40-75	...-G/W 40-100
A1	20 ... 120	55 .. 205	30 ... 230
A2	80 ... 180	115 ... 265	90 ... 290
A3	140 ... 240	175 ... 325	150 ... 350
A4	200 ... 300	-	-

(2) Finger connection
(56) Included in delivery
(72) Fit for centering sleeves
(80) Depth of the centering sleeve hole in the mating part

Optionally intermediate jaws can be used, enabling direct connection and alignment of top jaws and various standard accessories in Z-direction.

Description	ID	Material	Scope of delivery
Intermediate jaws			
ZBA-PHL 40	0308169	Aluminum	2

Mounting kit for proximity switch

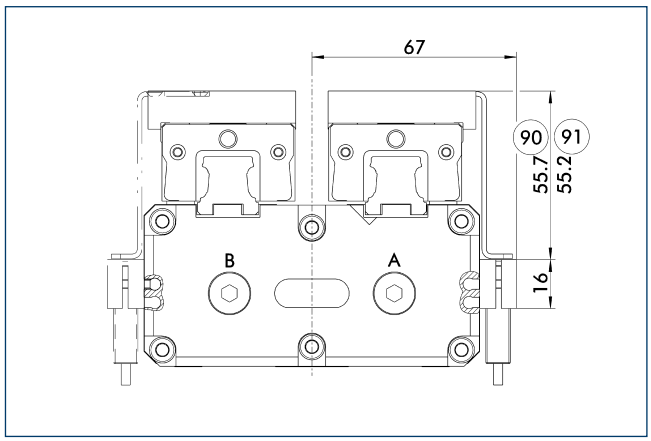

(90) Height of version G
(91) Height of version W

Limit position monitor can be mounted with mounting kit.

Description	ID	
Mounting kit for proximity switch		
AS-PHL040-IN80	0308832	

ⓘ This mounting kit needs to be ordered optionally as an accessory.

IN 80 inductive proximity switches

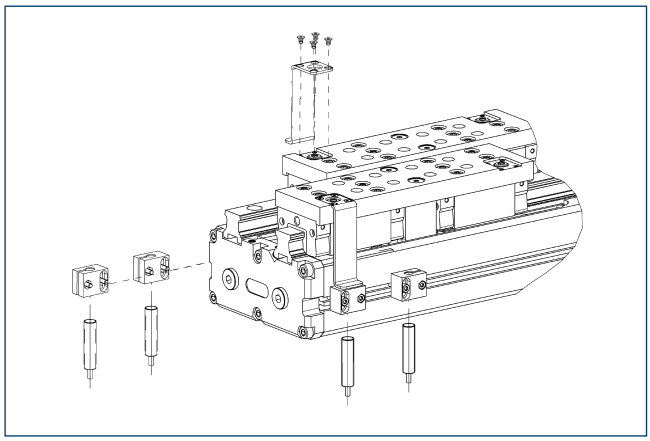

Limit position monitor can be mounted with mounting kit.

Description	ID	Often combined
Mounting kit for proximity switch		
AS-PHL040-IN80	0308832	
Inductive proximity switches		
IN 80-S-M12	0301578	
IN 80-S-M8	0301478	●
INK 80-S	0301550	
Cable extensions		
KV BG12-SG12 3P-0030-PNP	0301999	
KV BG12-SG12 3P-0060-PNP	0301998	
KV BW08-SG08 3P-0030-PNP	0301495	
KV BW08-SG08 3P-0100-PNP	0301496	
KV BW08-SG08 3P-0200-PNP	0301497	●
KV BW12-SG12 3P-0030-PNP	0301595	
KV BW12-SG12 3P-0100-PNP	0301596	
KV BW12-SG12 3P-0200-PNP	0301597	
Clip for plug / socket		
CLI-M12	0301464	
CLI-M8	0301463	
Connection cables		
KA BG08-L 3P-0300-PNP	0301622	●
KA BG08-L 3P-0500-PNP	0301623	
KA BG12-L 3P-0500-PNP	30016369	
KA BW08-L 3P-0300-PNP	0301594	
KA BW08-L 3P-0500-PNP	0301502	
KA BW12-L 3P-0300-PNP	0301503	
KA BW12-L 3P-0500-PNP	0301507	
Sensor distributor		
V2-M8	0301775	●
V2-M12	0301776	●
V4-M12	0301747	
V4-M8	0301746	
V8-M12	0301752	
V8-M8	0301751	

ⓘ Two sensors (closer/S) are required for each unit, plus extension cables as an option. This mounting kit needs to be ordered optionally as an accessory. Please note the minimum permitted bending radii for the sensor cables, which are generally 35 mm.

MMS electronic magnetic switches

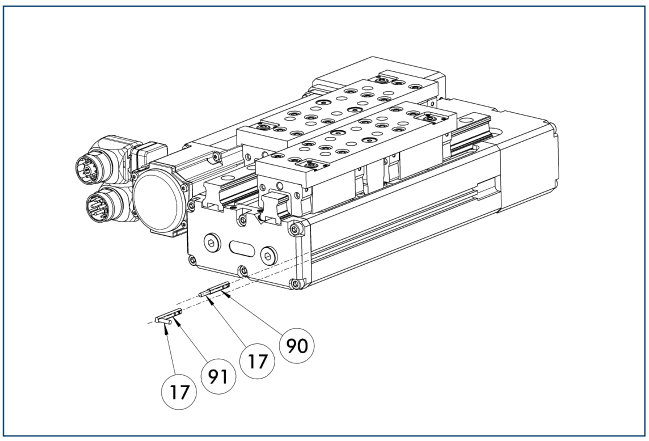

(17) Cable outlet
(91) MMS 22...-SA sensor
(90) MMS 22... sensor

End position monitoring for mounting in the C-slot.

Description	ID	Often combined
MMS electronic magnetic switches		
MMS 22-S-M8-PNP	0301032	●
MMSK 22-S-PNP	0301034	
MMS electronic magnetic switches with lateral cable outlet		
MMS 22-S-M8-PNP-SA	0301042	●
MMSK 22-S-PNP-SA	0301044	
Cable extensions		
KV BW08-SG08 3P-0030-PNP	0301495	
KV BW08-SG08 3P-0100-PNP	0301496	
KV BW08-SG08 3P-0200-PNP	0301497	●
Clip for plug / socket		
CLI-M8	0301463	
Connection cables		
KA BG08-L 3P-0300-PNP	0301622	●
KA BG08-L 3P-0500-PNP	0301623	
KA BW08-L 3P-0300-PNP	0301594	
KA BW08-L 3P-0500-PNP	0301502	
Sensor distributor		
V2-M8	0301775	●
V4-M8	0301746	
V8-M8	0301751	

ⓘ Two sensors (closer/S) are required for each unit, plus extension cables as an option. Please note the minimum permitted bending radii for the sensor cables, which are generally 35 mm.

MMS PI1 programmable magnetic switches

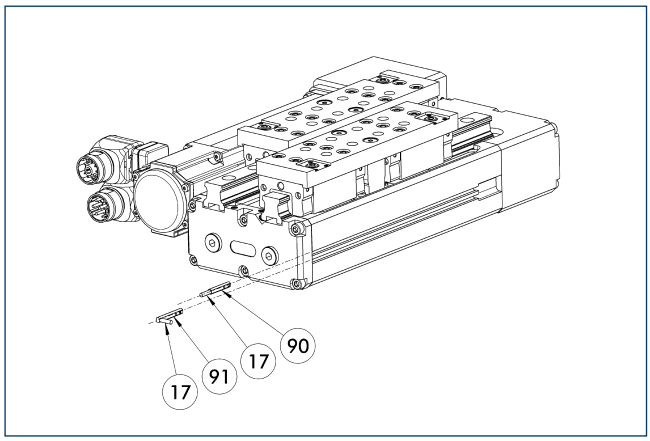

17 Cable outlet
91 MMS 22...-PI1-...-SA sensor
90 MMS 22...-PI1-... sensor

Position query with one programmable position per sensor and electronics integrated in sensor. Programmable via MT magnet teaching tool (included in the scope of delivery) or ST plug teaching tool (optional). Limit position query mounted in C-groove. If the ST plug teaching tools are listed in the table, teaching can only take place with the ST plug teaching tools.

Description	ID	Often combined
MMS PI1 programmable magnetic switches		
MMS 22-PI1-S-M8-PNP	0301160	●
MMSK 22-PI1-S-PNP	0301162	
MMS PI1-HD programmable magnetic switches with stainless steel housing		
MMS 22-PI1-S-M8-PNP-HD	0301110	●
MMSK 22-PI1-S-PNP-HD	0301112	
MMS PI1 programmable magnetic switches with lateral cable outlet		
MMS 22-PI1-S-M8-PNP-SA	0301166	●
MMSK 22-PI1-S-PNP-SA	0301168	

ⓘ Two sensors (closer/S) are required for each unit, plus extension cables as an option. Please note the minimum permitted bending radii for the sensor cables, which are generally 35 mm. Connection cable, cable extensions, and sensor distributors can be found in the table for the MMS 22.

Flexible. Light. Productive.

LEG Long-stroke Gripper

Light long-stroke gripper for flexible and highly dynamic handling of various components

Field of Application

For use in a clean working environment, highly flexible gripping of a wide range of geometries and types of parts. The servo-electric drives allow exact determination of the gripping position and gripping force.

Advantages – Your benefit

Synchronized but also asynchronous moving of the fingers for various gripping applications

Modular drive concept compatible with standard robot control units with flexibility to accommodate the widest range of motors

Position and torque-controlled movement of the gripper a great part variety can be covered by different sizes and dimensional stability

Extremely long stroke with up to 2 x 0 ... 281 mm

Passive finger change system (on request) can be used manually or fully automated

High moment payloads due to the guiding suitable for using long gripper fingers

Available for standard robot adaptations according to ISO 9409

Sizes	Weight	Gripping force	Stroke per jaw	Workpiece weight
Quantity: 3	5.4 .. 7.9 kg	1050 .. 1500 N	101 .. 281 mm	5.25 .. 7.5 kg

Functional Description

The two ball-screw spindle drives, which move the base jaw, are driven by one or two servo motors via a toothed belt.
With two drives every jaw can be moved individually from each other. During the actuation with a servo motor, a coupling synchronizes the right-to-left and the left-to-right spindle with each other.

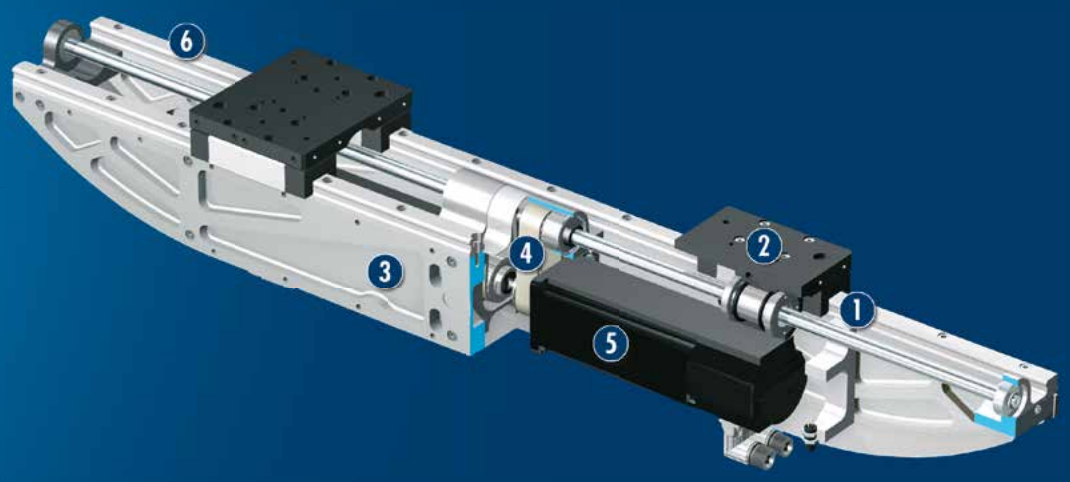

① **Recirculating ballbearing guide**
Precise gripping due to high-amperage smoothly running guidance

② **Base jaw**
for the connection of workpiece-specific gripper fingers

③ **Housing**
Weight-optimized due to FEM and topology examination

④ **Kinematics**
High moment payloads due to the ball screw

⑤ **Motor installation space**
for various motors

⑥ **Linear guide**
Heavy-duty for high moment loads and long top jaws

CAD data, operating manuals and other current product documents are available at **www.schunk.com**

General Notes about the Series

Operating principle: Ball screw

Housing material: Aluminum alloy, coated

Base jaw material: Aluminum alloy, anodized

Actuation: electrically via an adaptable servo motor

Warranty: 24 months (details, general terms and conditions and operating manuals can be downloaded at www.schunk.com)

Scope of delivery: Enclosed pack with centering sleeve and centering pins, assembly and operating manual with declaration of incorporation. Depending on the variant, operation of the gripper requires a motor add-on kit, a servo motor and a suitable controller. They are not included in the scope of delivery and must be ordered separately.

Gripping force: is the arithmetic total of the gripping force applied to each gripper jaw at distance P (see illustration).

Finger length: is measured from the upper edge of the gripper housing in the direction of the main axis. The breach of the max. permitted finger length can bring higher abrasion.

Repeat accuracy: is defined as the spread of the limit position after 100 consecutive strokes.

Workpiece weight: is calculated for a force-fit connection with a coefficient of friction of 0.1 and a safety factor of 2 against slippage of the workpiece on acceleration due to gravity g. Considerably heavier workpiece weights are permitted with form-fit gripping.

Closing and opening times: Minimum closing and opening times are only the movement times of the base jaws at max. speed, max. acceleration without electrical restrictions (maximum current) and observance of the maximum permissible mass per finger.

Nominal currents: may be permanently applied. The information in the respective product documentation must be observed for all current levels beyond the rated current up to the maximum current.

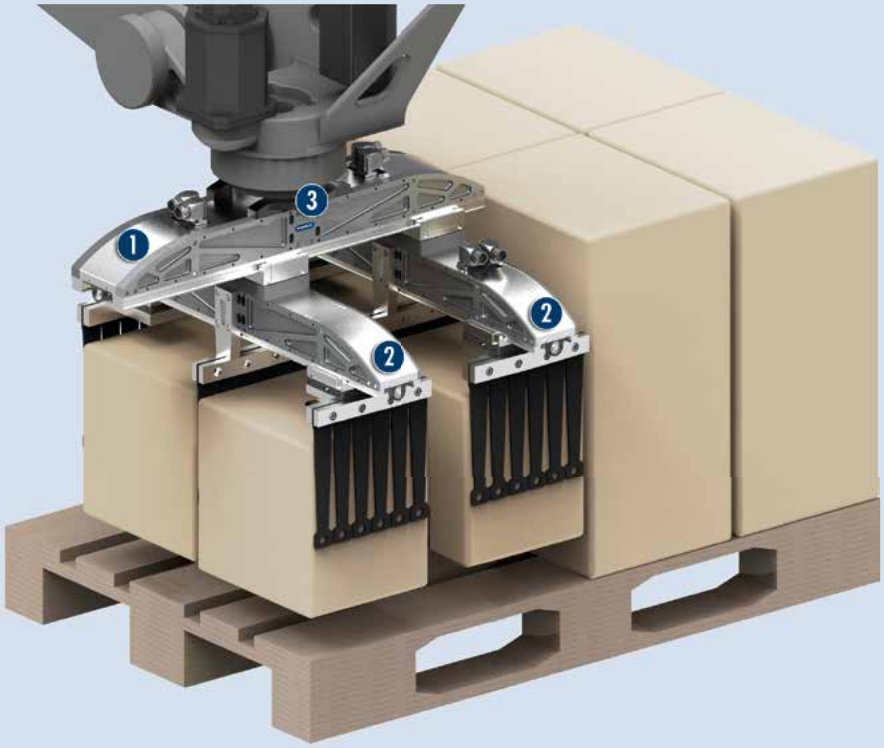

Application example

Gripping system solution comprising three electric grippers for the handling of a wide variety of workpieces

1. LEG 2-Finger Long-stroke Gripper, asynchronous version
2. LEG 2-Finger Long-stroke Gripper, synchronous version
3. Adapter flange

SCHUNK offers more ...

The following components make the product LEG even more productive – the suitable addition for the highest functionality, flexibility, reliability, and controlled production.

Centering Sleeves

Servomotor

Finger Change System
(on request)

Drag Chain

Flange

Gripper Pads

ⓘ Further information regarding the products can be found on the following product pages or at www.schunk.com. Please contact us for further information: SCHUNK technical hotline +49-7133-103-2696

Options and special Information

Flexible in choice of motor and controller: The electrical control is carried out via an adaptable servo drive using common standard controller like Bosch or Siemens
Easy integration: Due to the possibility to adapt a common servo motor, the simple integration into the control system is guaranteed, using the advantages of the certain customer controller.
Identical control: Like a normal servo axis, the gripper can be controlled directly and interpolated with existing axes.

LEG 400

SCHUNK Grippers electric | 2-Finger Parallel Grippers | Long-stroke Gripper

Gripping force

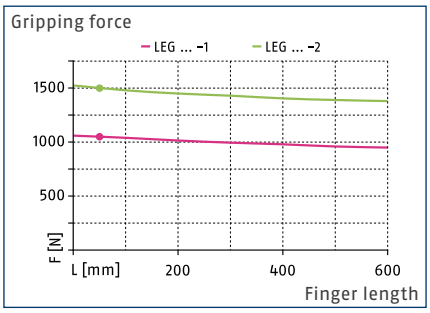

Finger load

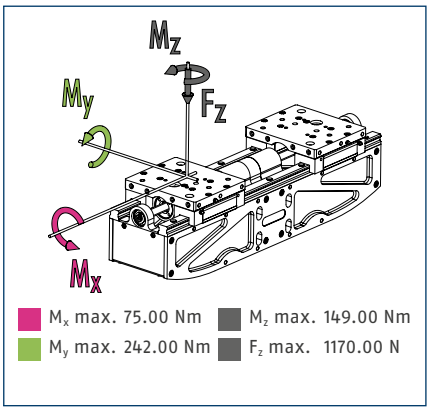

ⓘ The specified torques and forces are static values, apply for each base jaw, and may occur simultaneously. M_y may occur in addition to the torque generated by the gripping force.

Technical data

Synchronous version for 1 motor		LEG 400-1-15-2-10X3-B
ID		0308040
General operating data		
Stroke per jaw	[mm]	101
min. / max. gripping force	[N]	300/1050
Weight	[kg]	5.4
Recommended workpiece weight	[kg]	5.25
max. permitted finger length	[mm]	600
max. permitted weight per finger	[kg]	10
IP class		20
min. / max. ambient temperature	[°C]	5/55
Repeat accuracy	[mm]	0.05
max. speed	[mm/s]	276
max. acceleration	[mm/s²]	1500
Options and their characteristics		
Asynchronous version for 2 motors		LEG 400-2-15-2-10X3-B
ID		0308041
min. / max. gripping force	[N]	300/1500
Weight	[kg]	5.4
Recommended workpiece weight	[kg]	7.5

ⓘ Motors are not included in the purchase price in the base variant. Please ask us for details about the integration of other motor types.

Main view

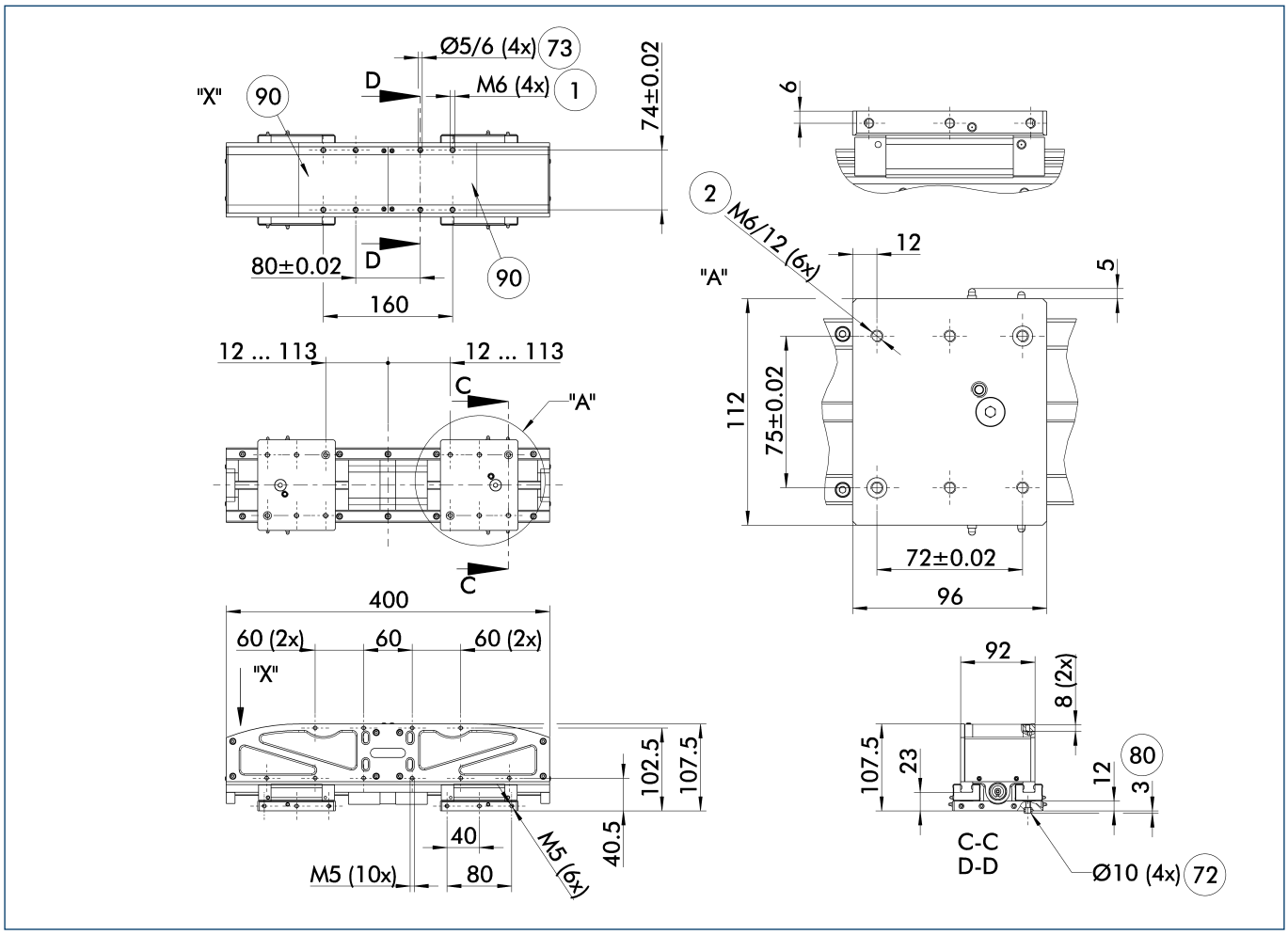

The drawing shows the gripper in the basic version with closed jaws, without dimensional consideration of the options described below.

1. Gripper connection
2. Finger connection
72. Fit for centering sleeves
73. Fit for centering pins
80. Depth of the centering sleeve hole in the mating part
90. Plug connector of the individual motor

Maximum permitted finger projection

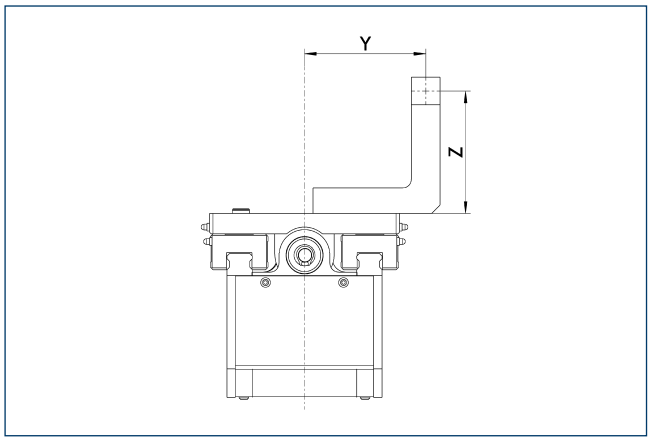

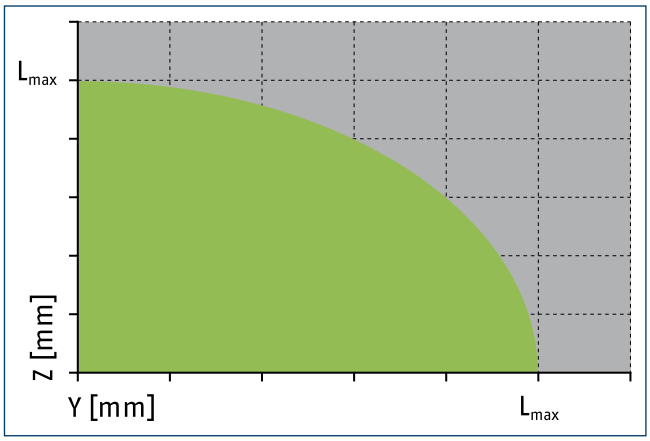

Permitted range

Inadmissible range

L_{max} is equivalent to the maximum permitted finger length, see the chart of technical specifications.

Adapter flange according to DIN ISO-9409-1-050

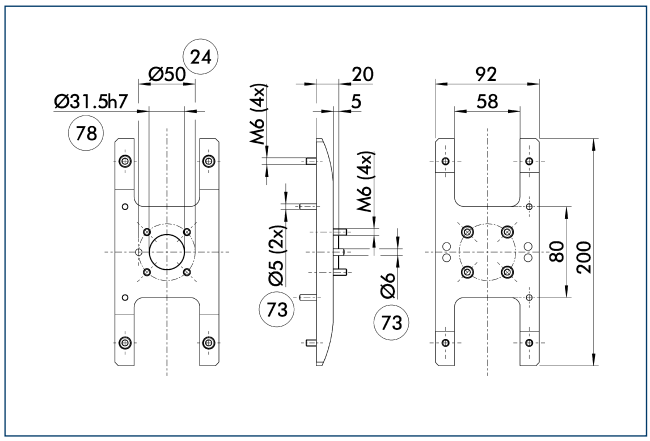

24 Bolt circle
78 Fitting for centering
73 Fit for centering pins

Description	ID	
ISO flanges		
ADF 050	0308090	

Adapter flange according to DIN ISO-9409-1-063

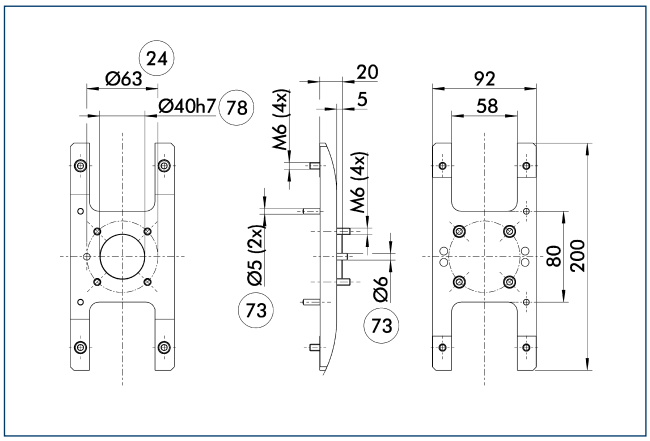

24 Bolt circle
78 Fitting for centering
73 Fit for centering pins

Description	ID	
ISO flanges		
ADF 063	0308091	

Adapter flange according to DIN ISO-9409-1-100

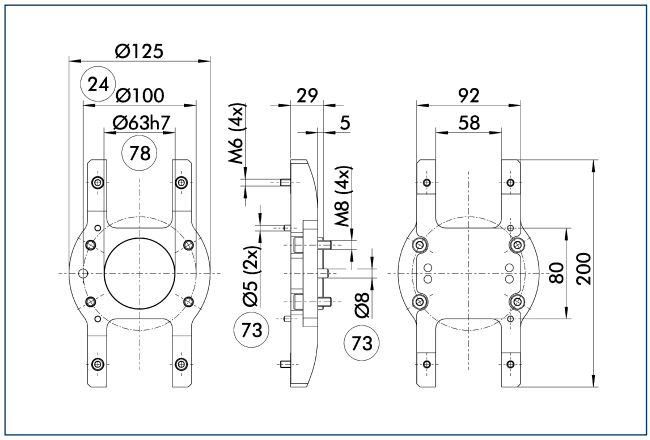

24 Bolt circle
78 Fitting for centering
73 Fit for centering pins

Description	ID	
ISO flanges		
ADF 100	0308092	

Adapter flange according to DIN ISO-9409-1-125

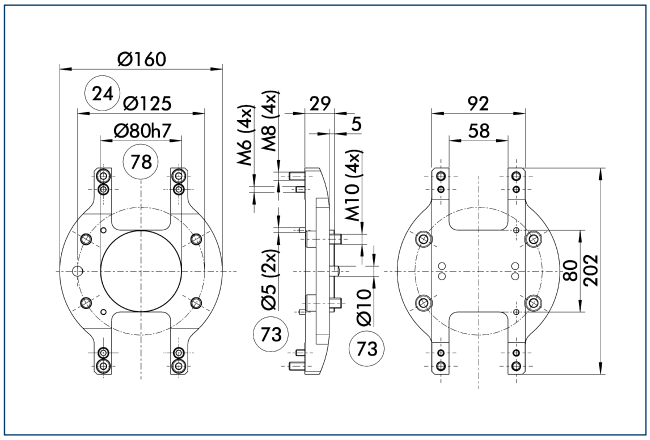

24 Bolt circle
78 Fitting for centering
73 Fit for centering pins

Description	ID	
ISO flanges		
ADF 125	0308093	

Adapter flange according to DIN ISO-9409-1-160

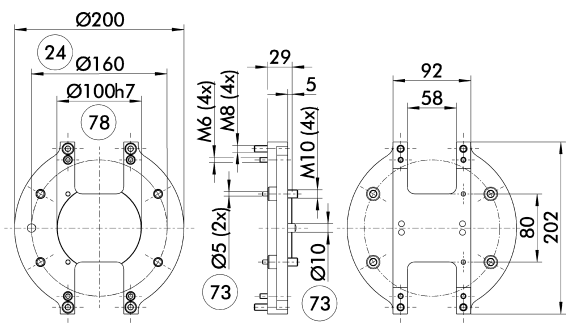

24 Bolt circle
78 Fitting for centering
73 Fit for centering pins

Description	ID	
ISO flanges		
ADF 160	0308094	

Adapter flange

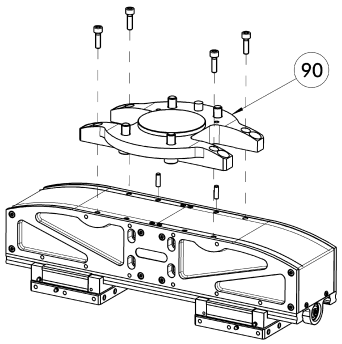

90 Adapter flange

Adapter flange for connection of additional SCHUNK components or customized attachments.

Description	ID	
ISO flanges		
ADF 050	0308090	
ADF 063	0308091	
ADF 100	0308092	
ADF 125	0308093	
ADF 160	0308094	

Motor add-on kit for version "-B"

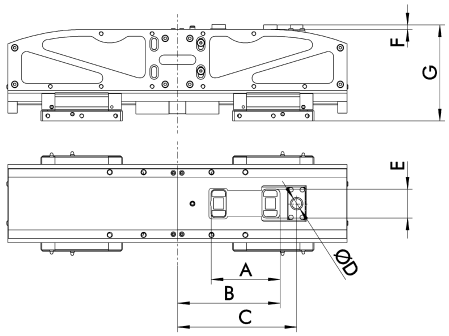

	A	B	C	D	E	F	G
Fanuc	81.6	121.9	140.5	15	36	6	113.5

The "B" version of the LEG can be equipped with the corresponding motor using a motor add-on kit. The motor itself is not part of the mounting kit, and must be provided by the customer.

Description	ID	Motor
Motor add-on kits		
MAS-LEG-400-Fanuc	0308070	Fanuc b05

LEG 520

SCHUNK Grippers electric | 2-Finger Parallel Grippers | Long-stroke Gripper

Gripping force

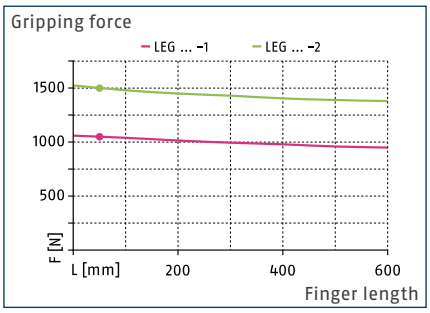

Finger load

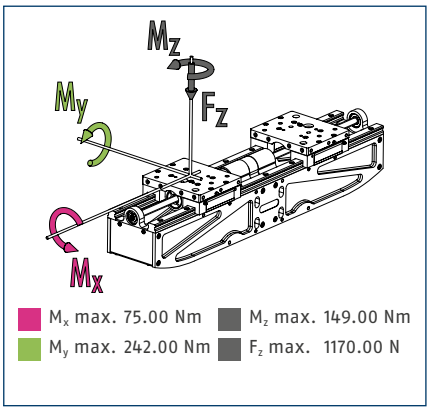

ⓘ The specified torques and forces are static values, apply for each base jaw, and may occur simultaneously. M_y may occur in addition to the torque generated by the gripping force.

Technical data

Synchronous version for 1 motor		LEG 520-1-15-2-10X3-B
ID		0308050
General operating data		
Stroke per jaw	[mm]	150
min. / max. gripping force	[N]	300/1050
Weight	[kg]	6.4
Recommended workpiece weight	[kg]	5.25
max. permitted finger length	[mm]	600
max. permitted weight per finger	[kg]	10
IP class		20
min. / max. ambient temperature	[°C]	5/55
Repeat accuracy	[mm]	0.05
max. speed	[mm/s]	276
max. acceleration	[mm/s²]	1500
Options and their characteristics		
Asynchronous version for 2 motors		LEG 520-2-15-2-10X3-B
ID		0308051
min. / max. gripping force	[N]	300/1500
Weight	[kg]	6.4
Recommended workpiece weight	[kg]	7.5

ⓘ Motors are not included in the purchase price in the base variant. Please ask us for details about the integration of other motor types.

Main view

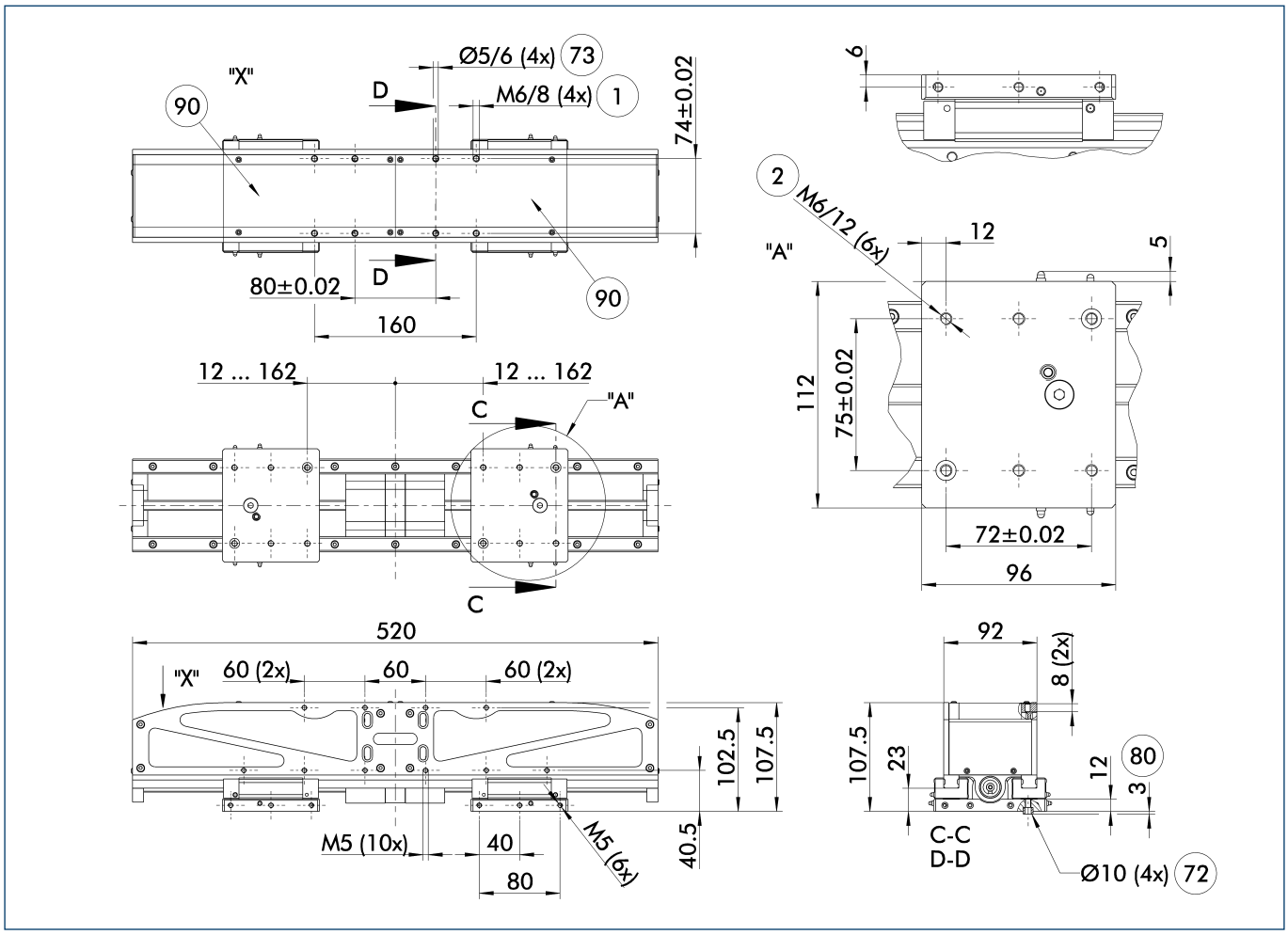

The drawing shows the gripper in the basic version with closed jaws, without dimensional consideration of the options described below.

1. Gripper connection
2. Finger connection
72. Fit for centering sleeves
73. Fit for centering pins
80. Depth of the centering sleeve hole in the mating part
90. Plug connector of the individual motor

Maximum permitted finger projection

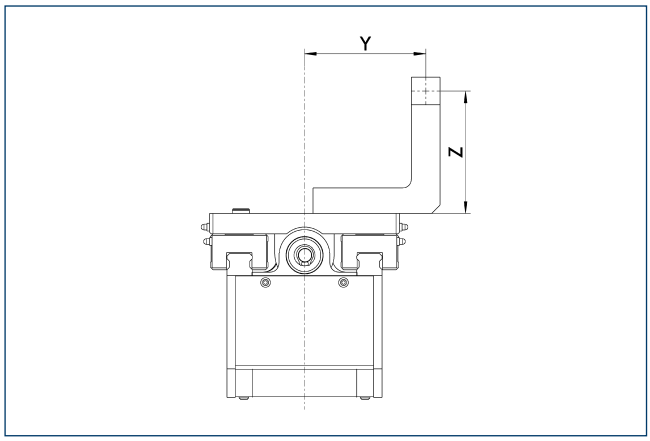

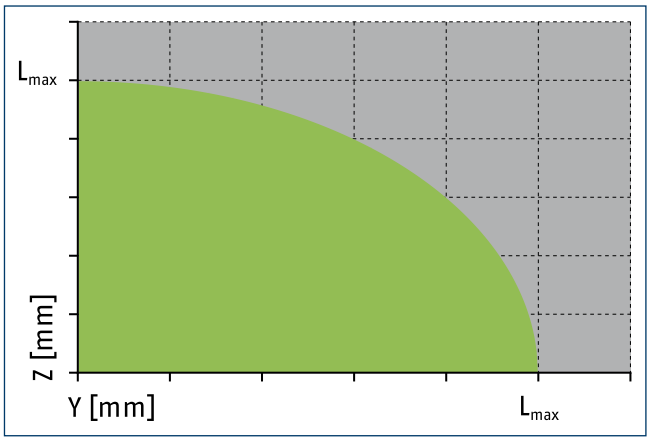

Permitted range

Inadmissible range

L_{max} is equivalent to the maximum permitted finger length, see the chart of technical specifications.

Adapter flange according to DIN ISO-9409-1-050

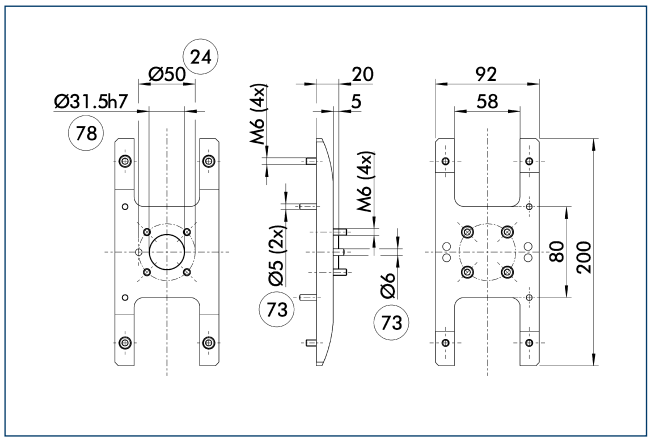

24 Bolt circle
78 Fitting for centering
73 Fit for centering pins

Description	ID	
ISO flanges		
ADF 050	0308090	

Adapter flange according to DIN ISO-9409-1-063

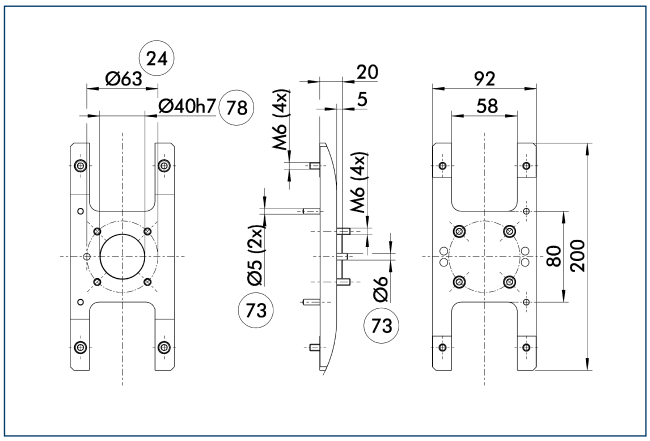

24 Bolt circle
78 Fitting for centering
73 Fit for centering pins

Description	ID	
ISO flanges		
ADF 063	0308091	

Adapter flange according to DIN ISO-9409-1-100

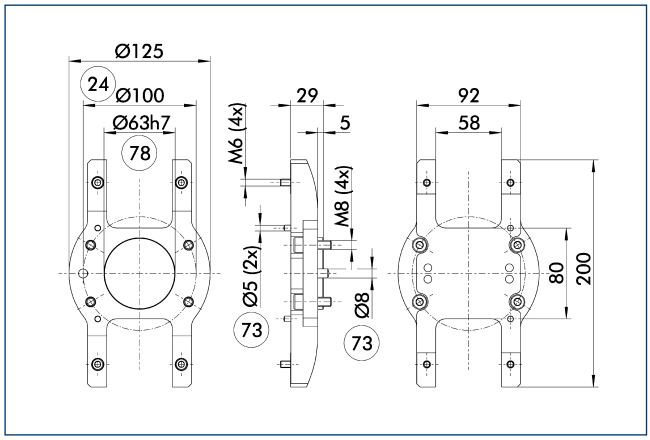

24 Bolt circle
78 Fitting for centering
73 Fit for centering pins

Description	ID	
ISO flanges		
ADF 100	0308092	

Adapter flange according to DIN ISO-9409-1-125

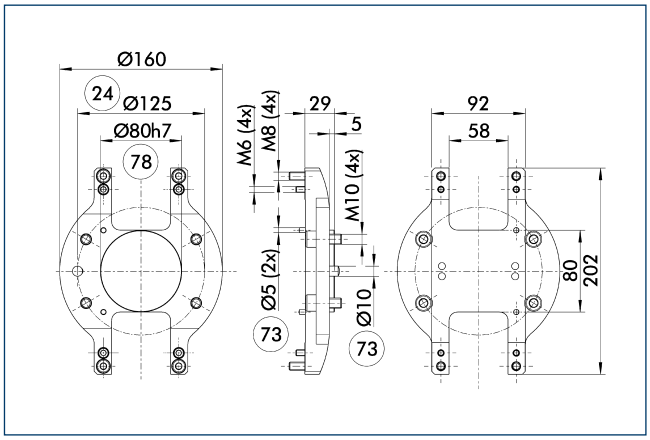

24 Bolt circle
78 Fitting for centering
73 Fit for centering pins

Description	ID	
ISO flanges		
ADF 125	0308093	

Adapter flange according to DIN ISO-9409-1-160

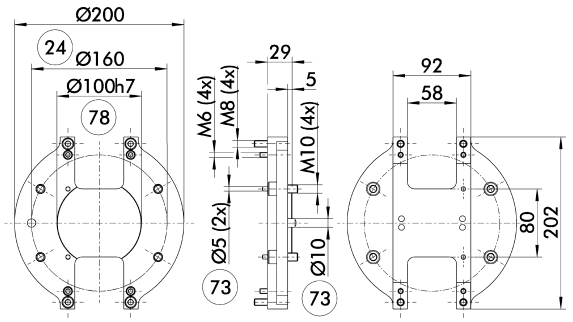

24 Bolt circle
78 Fitting for centering
73 Fit for centering pins

Description	ID	
ISO flanges		
ADF 160	0308094	

Adapter flange

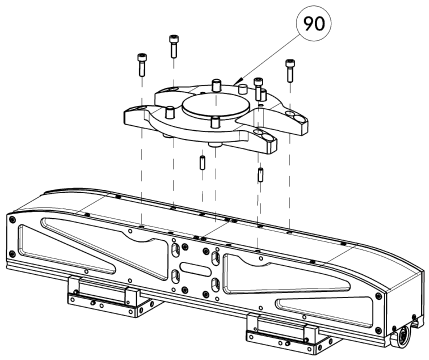

90 Adapter flange

Adapter flange for connection of additional SCHUNK components or customized attachments.

Description	ID	
ISO flanges		
ADF 050	0308090	
ADF 063	0308091	
ADF 100	0308092	
ADF 125	0308093	
ADF 160	0308094	

Motor add-on kit for version "-B"

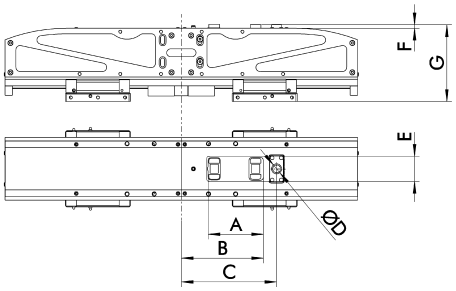

	A	B	C	D	E	F	G
Kuka	111	224.4	-	-	50.8	42.7	150.2
Fanuc	81.6	121.9	140.5	15	36	6	113.5
Siemens	133	246.4	-	-	50.8	43	150.5

The "B" version of the LEG can be equipped with the corresponding motor using a motor add-on kit. The motor itself is not part of the mounting kit, and must be provided by the customer.

Description	ID	Motor
Motor add-on kits		
MAS-LEG-520-Fanuc	0308077	Fanuc b05
MAS-LEG-520-Kuka	0308075	Kuka MG 08
MAS-LEG-520-Siemens	0308076	Siemens 1FK7022

LEG 760

SCHUNK Grippers electric | 2-Finger Parallel Grippers | Long-stroke Gripper

Gripping force

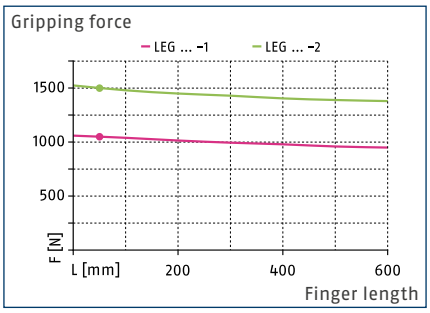

Finger load

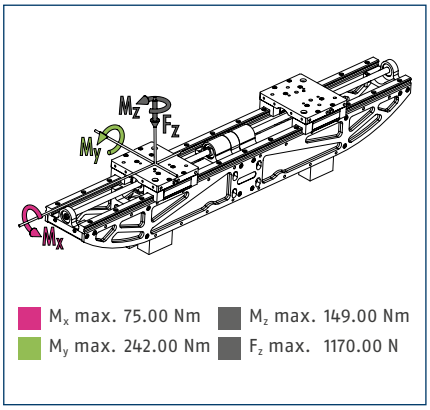

ⓘ The specified torques and forces are static values, apply for each base jaw, and may occur simultaneously. M_y may occur in addition to the torque generated by the gripping force.

Technical data

Synchronous version for 1 motor		LEG 760-1-15-2-10X3-B
ID		0308060
General operating data		
Stroke per jaw	[mm]	281
min. / max. gripping force	[N]	300/1050
Weight	[kg]	7.9
Recommended workpiece weight	[kg]	5.25
max. permitted finger length	[mm]	600
max. permitted weight per finger	[kg]	10
IP class		20
min. / max. ambient temperature	[°C]	5/55
Repeat accuracy	[mm]	0.05
max. speed	[mm/s]	276
max. acceleration	[mm/s²]	1500
Options and their characteristics		
Asynchronous version for 2 motors		LEG 760-2-15-2-10X3-B
ID		0308061
min. / max. gripping force	[N]	300/1500
Weight	[kg]	7.9
Recommended workpiece weight	[kg]	7.5

ⓘ Motors are not included in the purchase price in the base variant. Please ask us for details about the integration of other motor types.

Main view

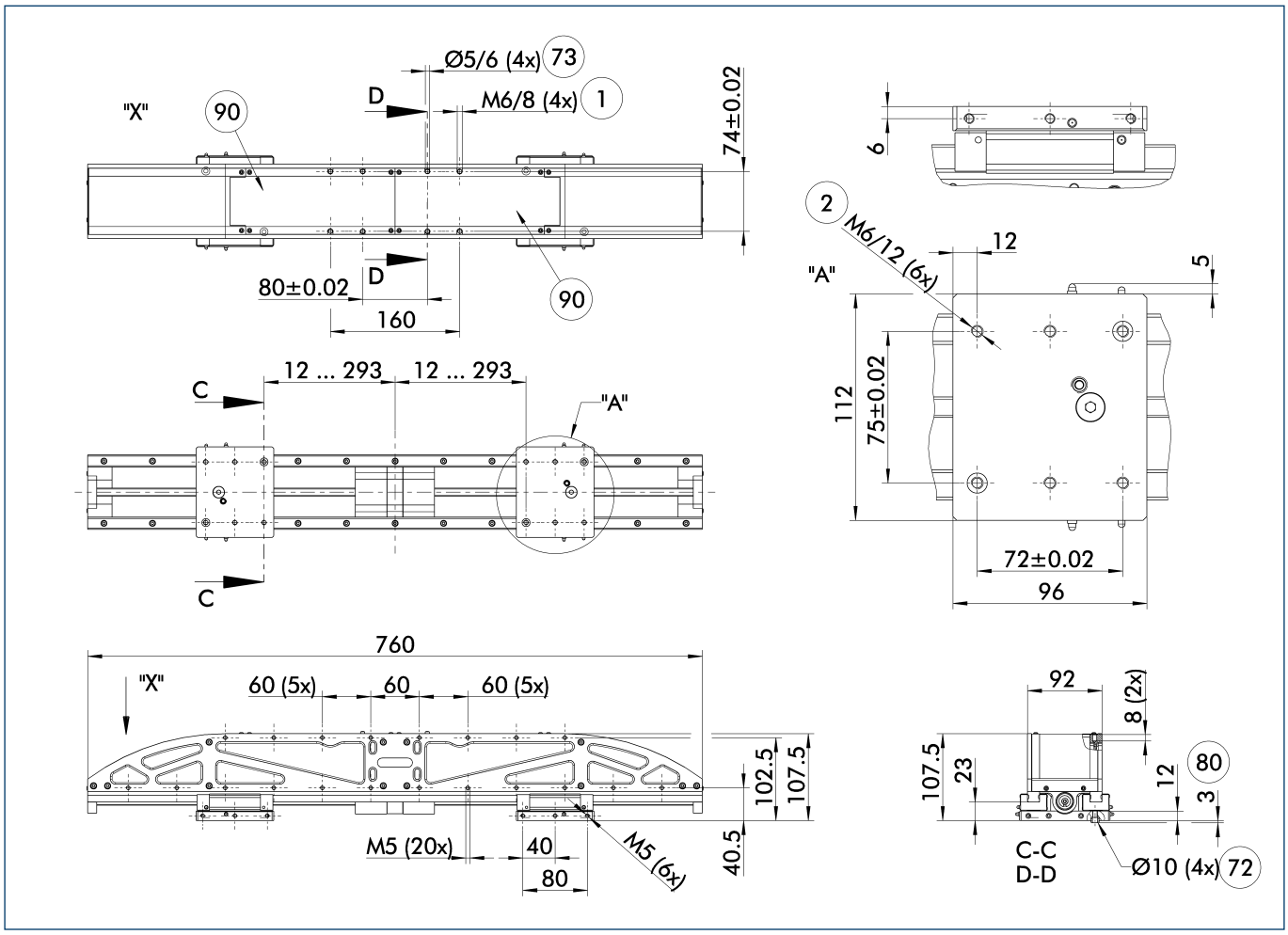

The drawing shows the basic version of the gripper with open jaws, without dimensional consideration of the options described below.

1. Gripper connection
2. Finger connection
72. Fit for centering sleeves
73. Fit for centering pins
80. Depth of the centering sleeve hole in the mating part
90. Plug connector of the individual motor

Maximum permitted finger projection

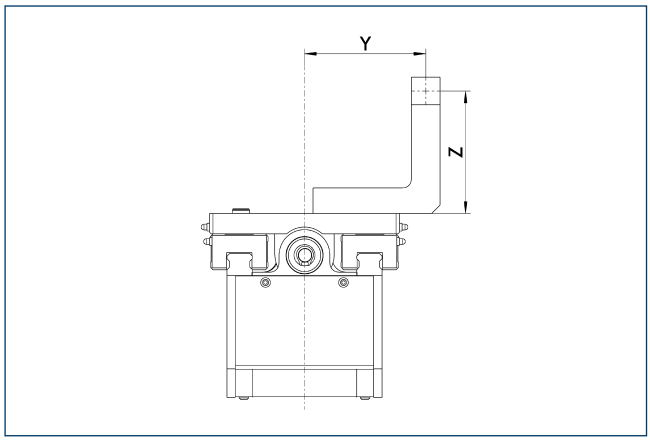

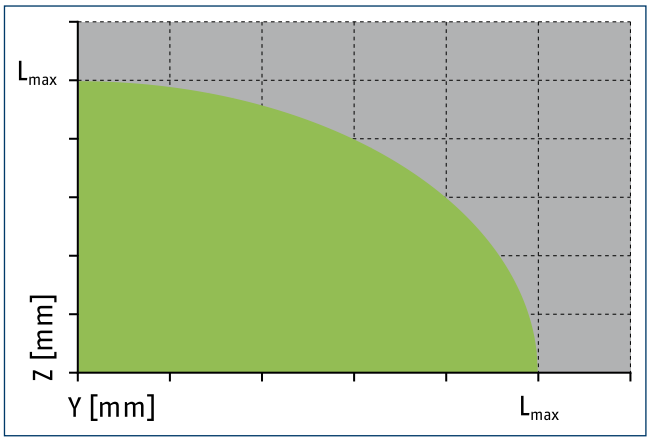

Permitted range

Inadmissible range

L_{max} is equivalent to the maximum permitted finger length, see the chart of technical specifications.

Adapter flange according to DIN ISO-9409-1-050

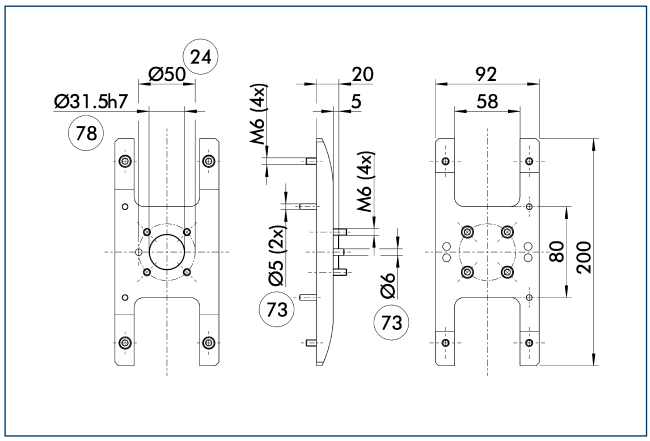

24 Bolt circle
78 Fitting for centering
73 Fit for centering pins

Description	ID	
ISO flanges		
ADF 050	0308090	

Adapter flange according to DIN ISO-9409-1-063

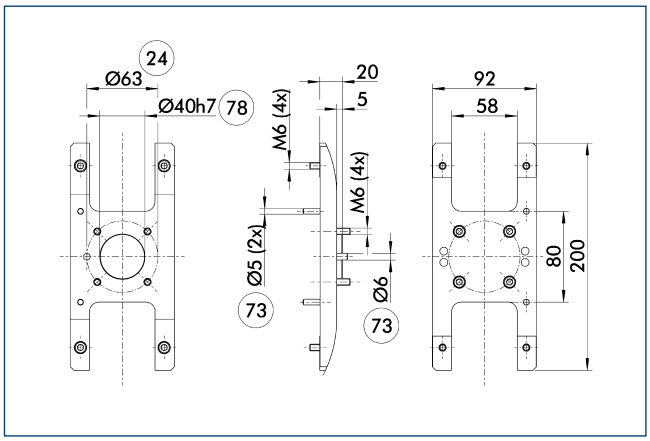

24 Bolt circle
78 Fitting for centering
73 Fit for centering pins

Description	ID	
ISO flanges		
ADF 063	0308091	

Adapter flange according to DIN ISO-9409-1-100

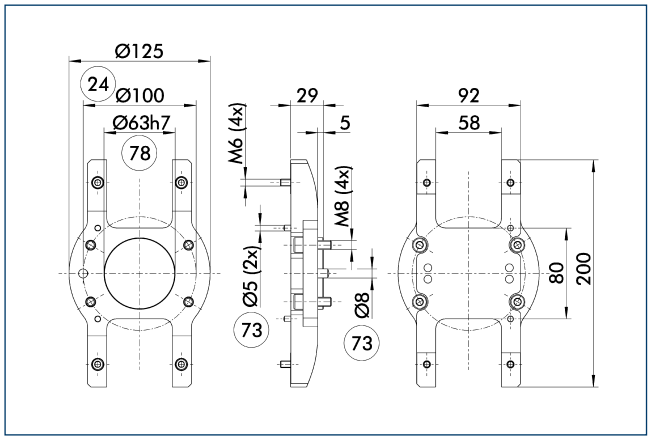

24 Bolt circle
78 Fitting for centering
73 Fit for centering pins

Description	ID	
ISO flanges		
ADF 100	0308092	

Adapter flange according to DIN ISO-9409-1-125

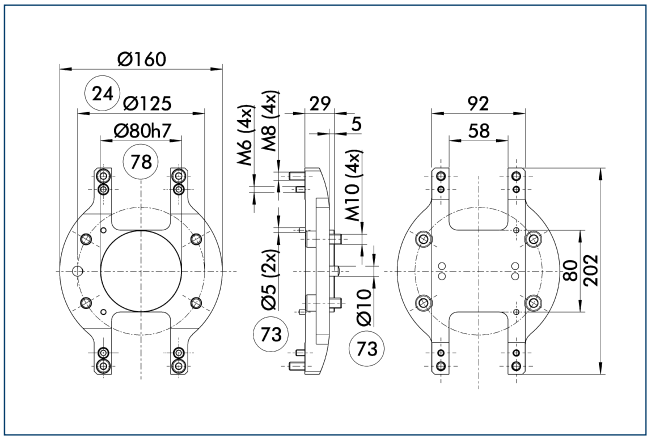

24 Bolt circle
78 Fitting for centering
73 Fit for centering pins

Description	ID	
ISO flanges		
ADF 125	0308093	

Adapter flange according to DIN ISO-9409-1-160

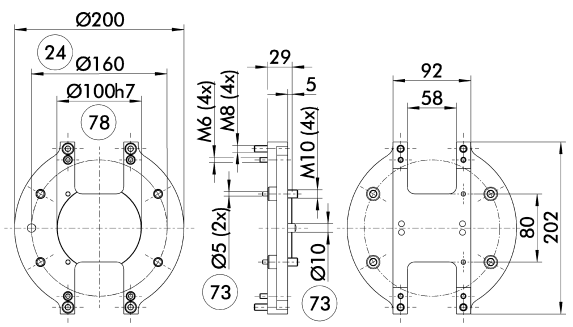

24 Bolt circle
78 Fitting for centering
73 Fit for centering pins

Description	ID	
ISO flanges		
ADF 160	0308094	

Adapter flange

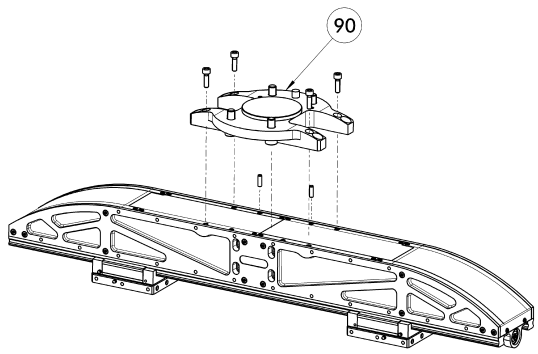

90 Adapter flange

Adapter flange for connection of additional SCHUNK components or customized attachments.

Description	ID	
ISO flanges		
ADF 050	0308090	
ADF 063	0308091	
ADF 100	0308092	
ADF 125	0308093	
ADF 160	0308094	

Motor add-on kit for version "-B"

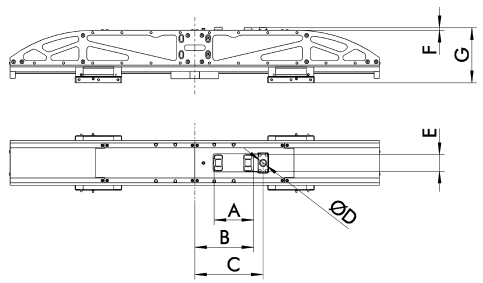

	A	B	C	D	E	F	G
Kuka	111	224.4	-	-	50.8	42.7	150.2
Fanuc	81.6	121.9	140.5	15	36	6	113.5
Siemens	133	246.4	-	-	50.8	43	150.5

The "B" version of the LEG can be equipped with the corresponding motor using a motor add-on kit. The motor itself is not part of the mounting kit, and must be provided by the customer.

Description	ID	Motor
Motor add-on kits		
MAS-LEG-760-Kuka	0308080	Kuka MG 08
MAS-LEG-760-Fanuc	0308082	Fanuc b05
MAS-LEG-760-Siemens	0308081	Siemens 1FK7022

Electric Grippers with adjustable Gripping Force for manifold Fields of Application.

3-Finger Centric Grippers electric

EZN Universal Gripper

Series	Size	Page
EZN		1536
EZN	64	1540
EZN	100	1546

Robust. Flexible. Strong.

EZN Universal Gripper

Servo-electric 3-finger centric gripper with high gripping force and high maximum moment due to multi-tooth guidance

Field of Application

Optimal standard solution for many areas of application; flexible use due to controllable gripping force, position and speed

Advantages – Your benefit

Drive design of servo motor for flexible use

With external electronics for simple integration into existing servo-controlled concepts via Profibus-DP, or CAN bus

Pre-positioning capability to reduce cycle times through a short working stroke

Robust multi-tooth guidance for precise handling

High maximum moments possible suitable for using long gripper fingers

Fastening at one gripper side in two screw directions for universal and flexible gripper assembly

Sizes	Weight	Gripping force	Stroke per jaw	Workpiece weight
Quantity: 2	0.98 .. 2.3 kg	500 .. 800 N	6 .. 10 mm	2.5 .. 4 kg

Functional Description

The spindle nut which is mounted on bearings, transfers the rotary motion of the servo motor into an axial motion.

The oblique surfaces of the wedge-hook generate a synchronous jaw movement.

① **Wedge-hook design**
for high power transmission and centric gripping

② **Base jaw**
with multiple-tooth guidance for precise gripping even with long gripper fingers

③ **Housing**
Weight-optimized through application of high-strength aluminum alloy

④ **Spindle nut**
Transforms the rotational movement into the axial movement of the wedge-hook

⑤ **Drive**
DC servo motor with resolver

CAD data, operating manuals and other current product documents are available at **www.schunk.com**

General Notes about the Series

Operating principle: Wedge-hook kinematics

Housing material: Aluminum alloy, coated

Base jaw material: Steel

Actuation: servo-electric, via brushless DC servo motor and spindle drive

Warranty: 24 months (details, general terms and conditions and operating manuals can be downloaded at www.schunk.com)

Scope of delivery: Enclosed pack with centering sleeve and centering pin, assembly and operating manual with declaration of incorporation. An external ECM controller is required for operation of the EZN gripper. Connection cables are also required for the EZN-S plug version. The controller and connection cable are optionally available and not included in the scope of delivery.

Gripping force: is the arithmetic total of the gripping force applied to each gripper jaw at distance P (see illustration).

Finger length: is measured from the upper edge of the gripper housing in the direction of the main axis. The breach of the max. permitted finger length can bring higher abrasion.

Repeat accuracy: is defined as the spread of the limit position after 100 consecutive strokes.

Workpiece weight: is calculated for a force-fit connection with a coefficient of friction of 0.1 and a safety factor of 2 against slippage of the workpiece on acceleration due to gravity g. Considerably heavier workpiece weights are permitted with form-fit gripping.

Closing and opening times: Minimum closing and opening times are only the movement times of the base jaws at max. speed, max. acceleration without electrical restrictions (maximum current) and observance of the maximum permissible mass per finger.

Nominal currents: may be permanently applied. The information in the respective product documentation must be observed for all current levels beyond the rated current up to the maximum current.

Application example

Connection via adapters to robots for handling different kinds of components – a complete application solution without pneumatics.

1 EZN servo-electric 3-Finger Centric Gripper

SCHUNK offers more ...

The following components make the product EZN even more productive – the suitable addition for the highest functionality, flexibility, reliability, and controlled production.

Centering Sleeves

Finger Blanks

Jaw Quick-change System

Force Measuring Jaws

ECM Controller

Protection Cover

ⓘ Further information regarding the products can be found on the following product pages or at www.schunk.com. Please contact us for further information: SCHUNK technical hotline +49-7133-103-2696

Options and special Information

Control via external ECM controller: The electrical control of the gripper takes place via the separately available ECM controller. Connection of the controller to the superordinate servo controlled concept can take place via Profibus or CAN bus. Both connection interfaces assure simple integration into the superordinate control system and enable the design of industrial bus topologies.
Plug version EZN-S: Plug version EZN-S is available for the ECM controller in addition to the standard variant with 5 m attached connection cable. The gripper has a 15 cm cable and stepped Y-plug in this version. Drag-chain-compatible or robot-compatible power and sensor cables are separately available.
Dust-tight version SD: absolutely sealed, increased degree of protection against the ingress of materials.

EZN 64

SCHUNK Grippers electric | 3-Finger Centric Grippers | Universal Gripper

Gripping force

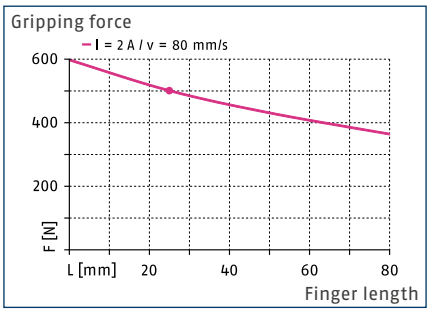

Speed

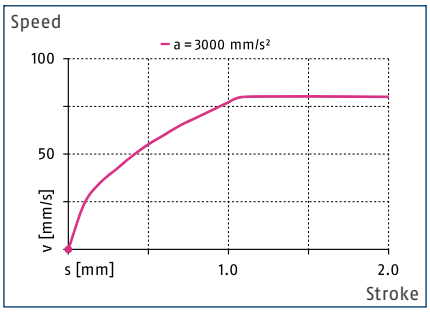

Finger load

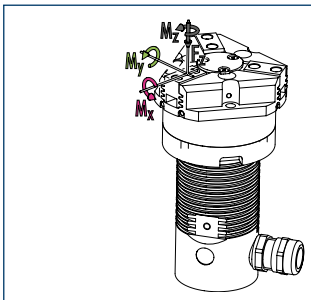

M_x max. 40.00 Nm | M_z max. 40.00 Nm
M_y max. 60.00 Nm | F_z max. 1100.00 N

ⓘ The specified torques and forces are static values, apply for each base jaw, and may occur simultaneously. M_y may occur in addition to the torque generated by the gripping force.

Technical data

Description		EZN 64	EZN 64-S
ID		0306110	0306113
General operating data			
Stroke per jaw	[mm]	6	6
min. / max. gripping force	[N]	140/500	140/500
Recommended workpiece weight	[kg]	2.5	2.5
max. permitted finger length	[mm]	80	80
max. permitted weight per finger	[kg]	0.35	0.35
Repeat accuracy	[mm]	±0.01	±0.01
Closing- / opening time	[s]	0.25/0.25	0.25/0.25
max. speed	[mm/s]	80	80
max. acceleration	[mm/s²]	3000	3000
Weight	[kg]	0.98	0.98
min. / max. ambient temperature	[°C]	5/55	5/55
IP class		41	41
Electrical operating data			
Controller electronics		external	external
Controller type		ECM-EZN064	ECM-EZN064
Nominal voltage	[V]	24	24
Nominal current	[A]	2	2
max. power supply	[A]	4	4
Communication interface		see ECM controller	see ECM controller
Options and their characteristics			
Dust-tight version		37306110	37306113
IP class		64	64

ⓘ Plug version EZN-S is available for the ECM controller in addition to the standard variant with 5 m attached connection cable. The gripper has a 15 cm cable and stepped Y-plug in this version. Drag-chain-compatible or robot-compatible power and sensor cables are separately available.

Main view

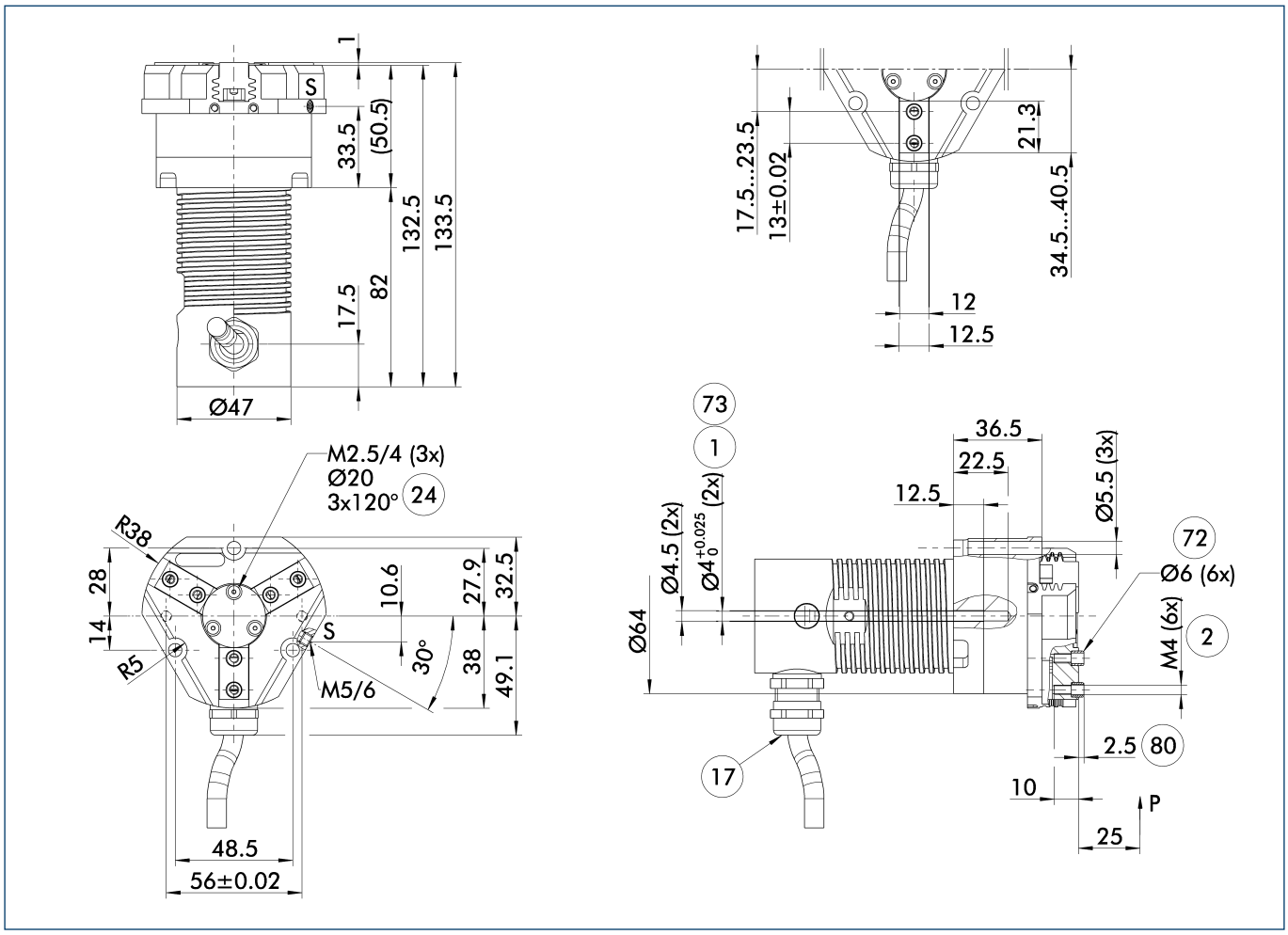

The drawing shows the gripper in the basic version with closed jaws, without dimensional consideration of the options described below.

- (1) Gripper connection
- (2) Finger connection
- (17) Cable outlet
- (24) Bolt circle
- (72) Fit for centering sleeves
- (73) Fit for centering pins
- (80) Depth of the centering sleeve hole in the mating part
- S Air purge connection (0.5 ... 1 bar)

Plug version

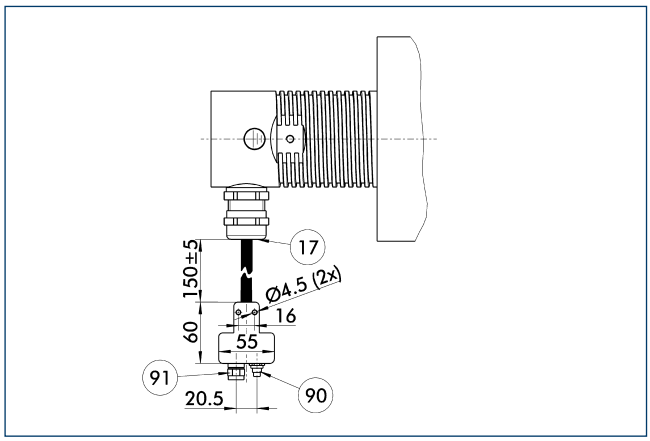

- (17) Cable outlet
- (90) Sensor plug (M12) for sensor cable
- (91) Motor plug (M17) for power cable

The drawing shows the plug version. It comprises a Y-plug and approximately 15 cm of cable between the module and plug.

Dust-tight version

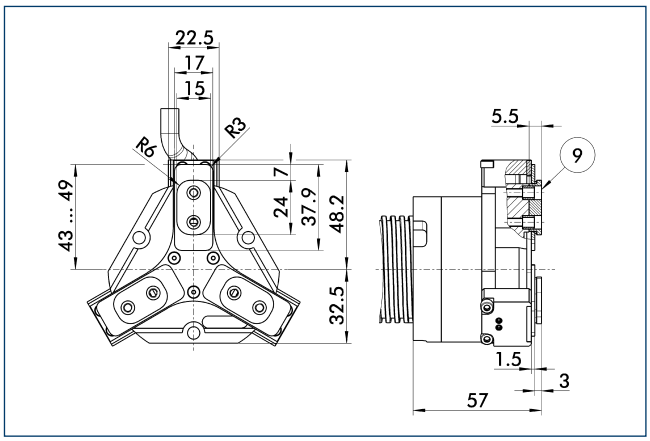

- (9) For mounting screw connection diagram, see basic version

The dust-tight variant increases the tightness from IP40 to IP64 with the additional cover plate.

HUE EZN-S 64 protective cover

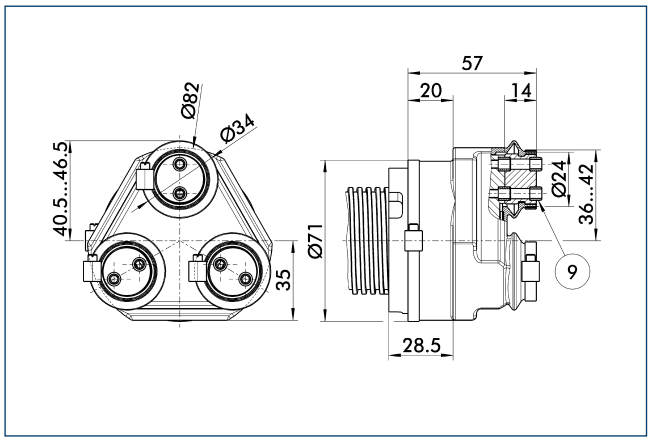

(9) For mounting screw connection diagram, see basic version

The HUE protective cover completely protects the gripper against external influences up to IP65 if an additional sealing of the cover bottom is provided as part of the application. The mounting diagram shifts by the height of the intermediate jaw.

Description	ID	IP class
Protection cover		
HUE EZN 64	0307043	65

ZBA L-plus 64 intermediate jaws

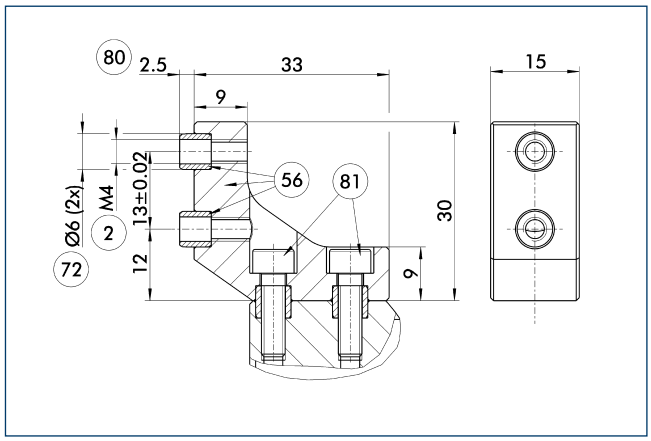

(2) Finger connection
(56) Included in delivery
(72) Fit for centering sleeves
(80) Depth of the centering sleeve hole in the mating part
(81) Not included in the scope of delivery

Optionally intermediate jaws can be used, enabling direct connection and alignment of top jaws and various standard accessories in Z-direction.

Description	ID	Material	Scope of delivery
Intermediate jaws			
ZBA-L-plus 64	0311722	Aluminum	1

BSWS jaw quick-change systems

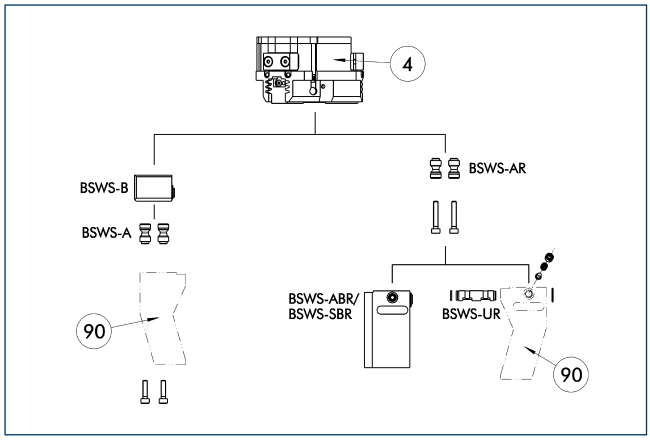

(4) Gripper
(90) Customized gripper fingers

There are various jaw quick-change systems available for the grippers. For detailed information, refer to the appropriate product.

Description	ID	
Jaw quick-change system adapter		
BSWS-AR 64	0300092	
BSWS-A 64	0303022	
Jaw quick-change system base		
BSWS-B 64	0303023	
Finger blanks with jaw quick-change system		
BSWS-ABR-PGZN-plus 64	0300072	
BSWS-SBR-PGZN-plus 64	0300082	
Jaw quick-change system reversed		
BSWS-UR 64	0302991	

ⓘ Only the systems listed in the table can be used.

UZB 64 universal intermediate jaw

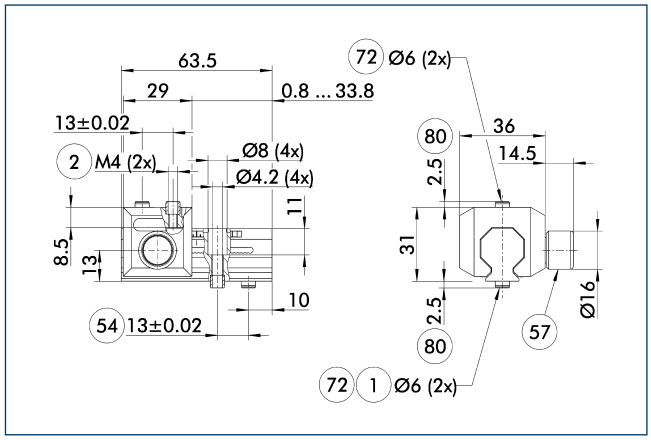

(1) Gripper connection
(2) Finger connection
(54) Optional right or left connection
(57) Locking
(72) Fit for centering sleeves
(80) Depth of the centering sleeve hole in the mating part

The universal intermediate jaw allows fast tool-free and reliable plugging and shifting of top jaws at the gripper.

Description	ID	Grid dimension [mm]
Universal intermediate jaw		
UZB 64	0300042	1.5
Finger blanks		
ABR-PGZN-plus 64	0300010	
SBR-PGZN-plus 64	0300020	

FMS-ZBA / ZBP 64 force-measuring jaws

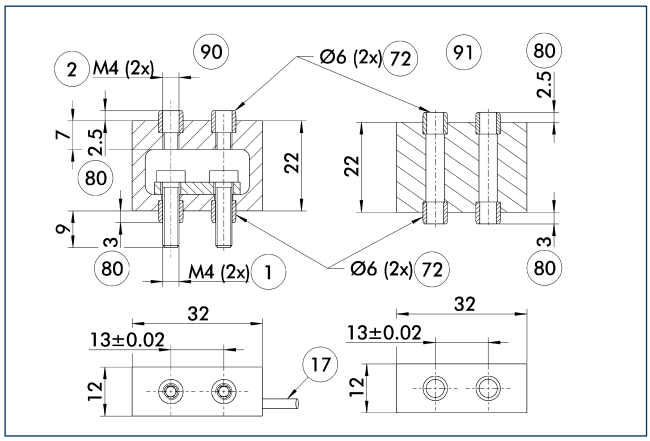

1 Gripper connection
2 Finger connection
17 Cable outlet
72 Fit for centering sleeves
80 Depth of the centering sleeve hole in the mating part
90 Active intermediate jaws
91 Passive intermediate jaws

Force measuring jaws measure gripping forces, but can also determine workpiece weights or dimensional deviations. There are active and passive intermediate jaws (FMS-ZBA or FMS-ZBP). At least one active force measuring jaw is required per gripper, the rest can be passive. For each active jaw, a FMS-A control unit and a FMS-AK connection cable are required.

Description	ID	
Active intermediate jaws		
FMS-ZBA 64	0301832	
FMS-ZBP 64	0301833	
Electronic processor		
FMS-A1	0301810	

ABR- / SBR-PGZN-plus 64 finger blanks

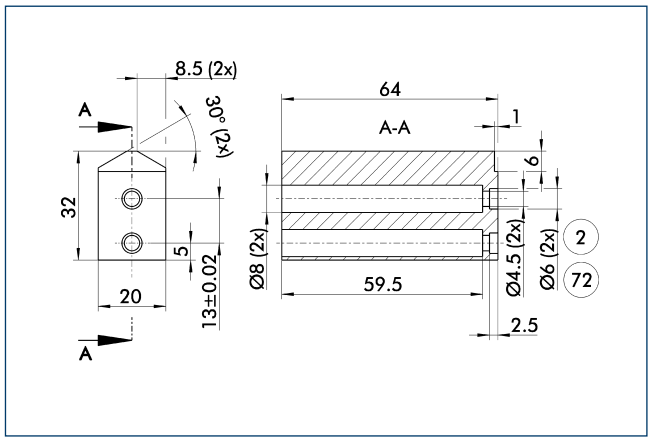

2 Finger connection
72 Fit for centering sleeves

Finger blanks for customized subsequent machining.

Description	ID	Material	Scope of delivery
Finger blanks			
ABR-PGZN-plus 64	0300010	Aluminum	1
SBR-PGZN-plus 64	0300020	16MnCr5	1

Power supply cable for SCHUNK ECM

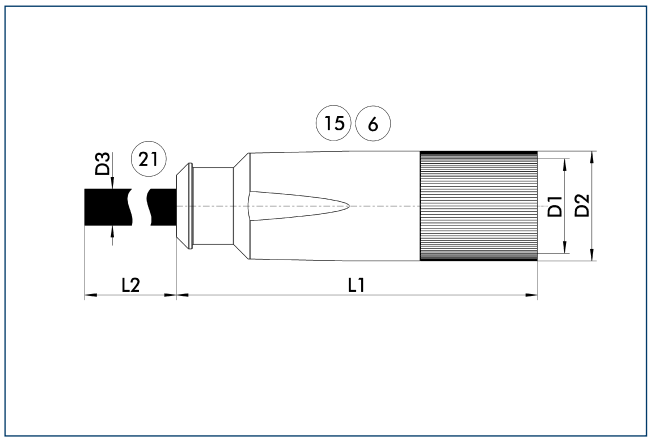

(6) Connection module side
(21) Connection controller side
(15) Socket

The power cables are supplied with open wires on the controller side for direct installation at the external ECM controller. The cables are available in robot-compatible (KAR) or drag chain compatible (KA) versions.

Description	ID	L_2 [m]	D_1
Power supply cable for SCHUNK ECM			
KA GLN1707-LK-00500-7	0306480	5	M17
KA GLN1707-LK-01000-7	0306481	10	M17
KA GLN1707-LK-01500-7	0306482	15	M17
KA GLN1707-LK-02000-7	0306483	20	M17
KAR GLN1707-LK-00500-7	0306485	5	M17
KAR GLN1707-LK-01000-7	0306486	10	M17
KAR GLN1707-LK-01500-7	0306487	15	M17
KAR GLN1707-LK-02000-7	0306488	20	M17

ⓘ Please observe the bending radius (7.5 times the cable diameter).

Sensor cable for SCHUNK ECM

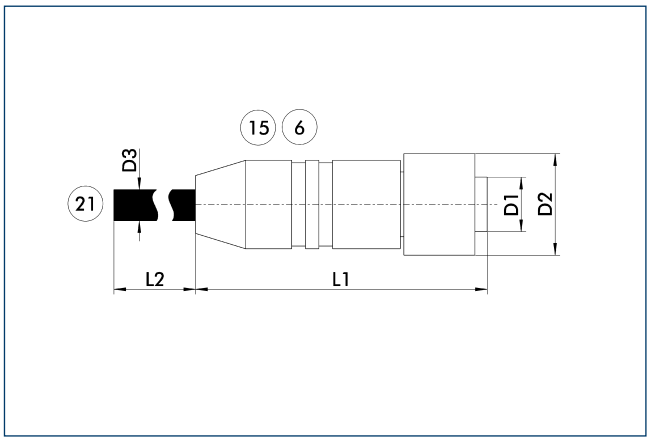

(6) Connection module side
(21) Connection controller side
(15) Socket

The sensor cables are supplied with pre-assembled plugs for direct assembly on the external ECM controller. The cables are available in robot-compatible (KAR) or drag chain compatible (KA) versions.

Description	ID	L_2 [m]	D_1
Sensor cable for SCHUNK ECM			
KA GLN1208-GK-00500-7	0306470	5	M12
KA GLN1208-GK-01000-7	0306471	10	M12
KA GLN0908-GK-01500-7	0306472	15	M12
KA GLN1208-GK-02000-7	0306473	20	M12
KAR GLN1208-GK-00500-7	0306475	5	M12
KAR GLN1208-GK-01000-7	0306476	10	M12
KAR GLN1208-GK-01500-7	0306477	15	M12
KAR GLN1208-GK-02000-7	0306478	20	M12

ⓘ Please observe the bending radius (7.5 times the cable diameter).

ECM motor controller

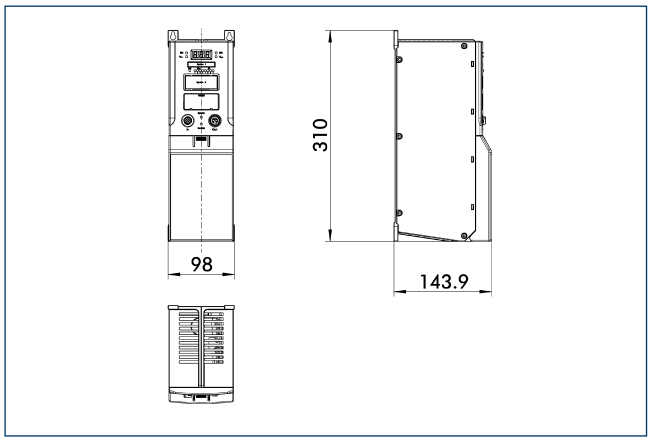

The ECM is required for operating the ERS rotary module (48 V) and the EGN and EZN electric grippers.

Description	
Controller	
ECM - EZN 64	

EZN 100

SCHUNK Grippers electric | 3-Finger Centric Grippers | Universal Gripper

Gripping force

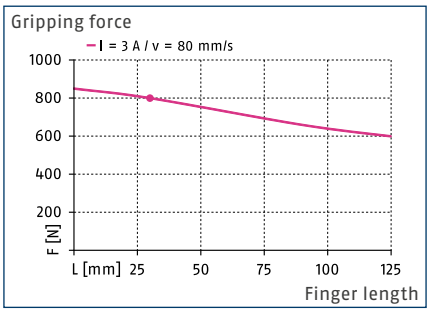

Speed

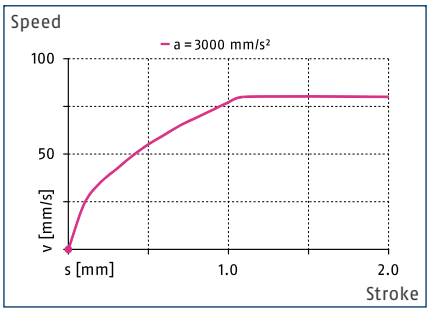

Finger load

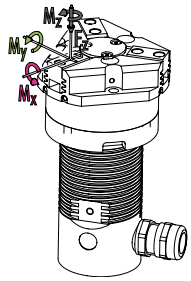

M_x max. 80.00 Nm | M_z max. 70.00 Nm
M_y max. 115.00 Nm | F_z max. 2000.00 N

ⓘ The specified torques and forces are static values, apply for each base jaw, and may occur simultaneously. M_y may occur in addition to the torque generated by the gripping force.

Technical data

Description		EZN 100	EZN 100-S
ID		0306112	0306114
General operating data			
Stroke per jaw	[mm]	10	10
min. / max. gripping force	[N]	300/800	300/800
Recommended workpiece weight	[kg]	4	4
max. permitted finger length	[mm]	125	125
max. permitted weight per finger	[kg]	1.1	1.1
Repeat accuracy	[mm]	±0.01	±0.01
Closing- / opening time	[s]	0.4/0.4	0.4/0.4
max. speed	[mm/s]	80	80
max. acceleration	[mm/s²]	3000	3000
Weight	[kg]	2.3	2.3
min. / max. ambient temperature	[°C]	5/55	5/55
IP class		41	41
Electrical operating data			
Controller electronics		external	external
Controller type		ECM-EZN100	ECM-EZN100
Nominal voltage	[V]	24	24
Nominal current	[A]	3	3
max. power supply	[A]	4	4
Communication interface		see ECM controller	see ECM controller
Options and their characteristics			
Dust-tight version		37306112	37306114
IP class		64	64

ⓘ Plug version EZN-S is available for the ECM controller in addition to the standard variant with 5 m attached connection cable. The gripper has a 15 cm cable and stepped Y-plug in this version. Drag-chain-compatible or robot-compatible power and sensor cables are separately available.

Main view

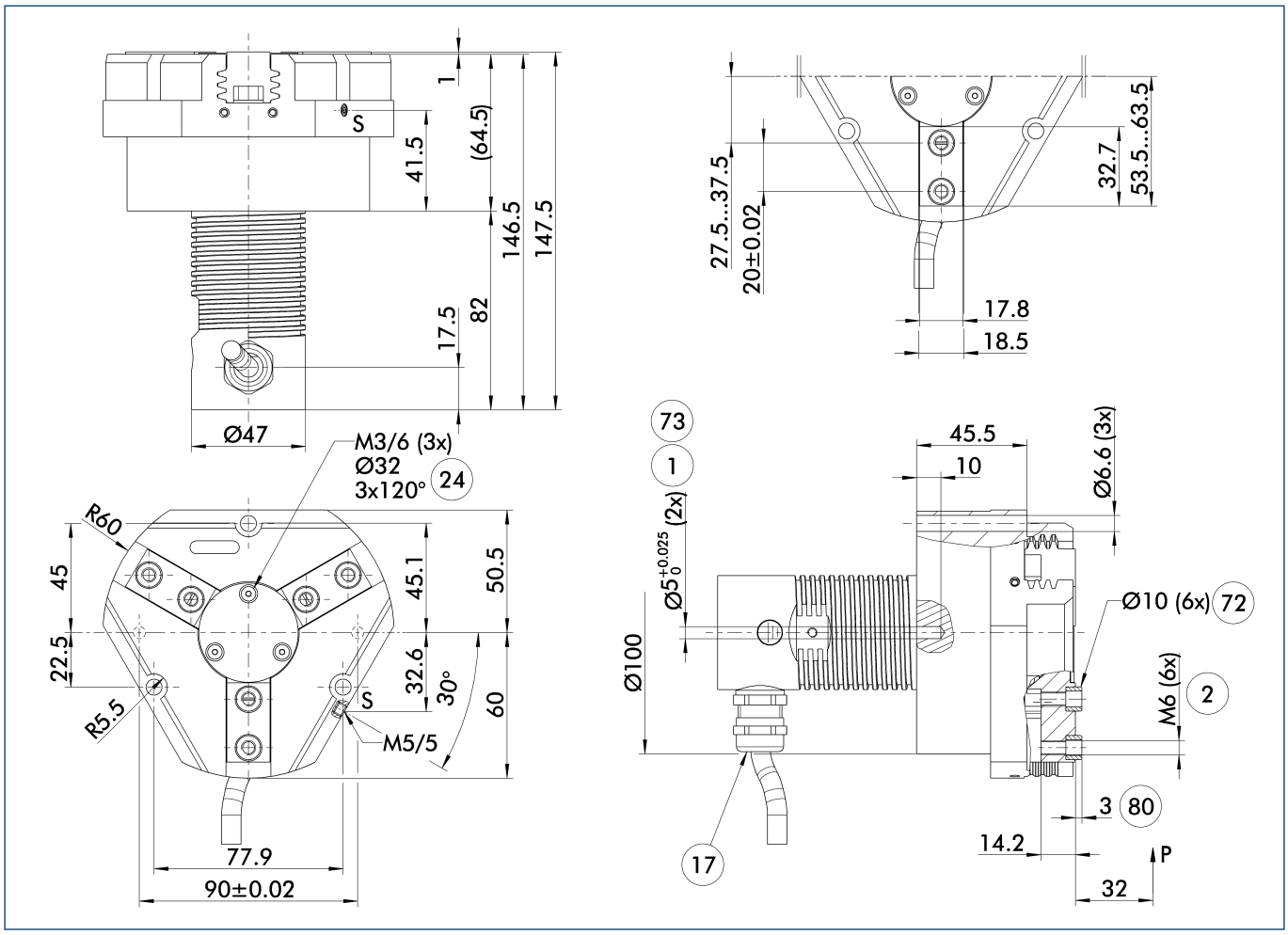

The drawing shows the gripper in the basic version with closed jaws, without dimensional consideration of the options described below.

- (1) Gripper connection
- (2) Finger connection
- (17) Cable outlet
- (24) Bolt circle
- (72) Fit for centering sleeves
- (73) Fit for centering pins
- (80) Depth of the centering sleeve hole in the mating part
- S Air purge connection (0.5 ... 1 bar)

Plug version

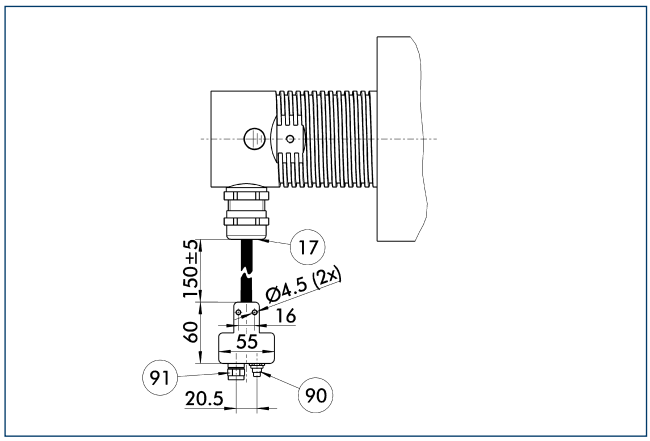

- (17) Cable outlet
- (90) Sensor plug (M12) for sensor cable
- (91) Motor plug (M17) for power cable

The drawing shows the plug version. It comprises a Y-plug and approximately 15 cm of cable between the module and plug.

Dust-tight version

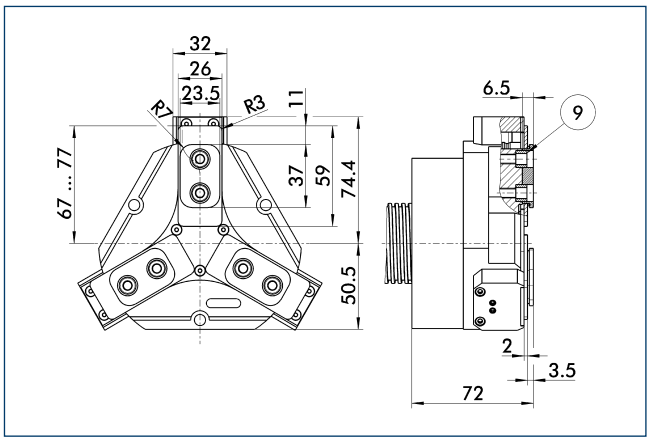

- (9) For mounting screw connection diagram, see basic version

The dust-tight variant increases the tightness from IP40 to IP64 with the additional cover plate.

HUE EZN-S 100 protective cover

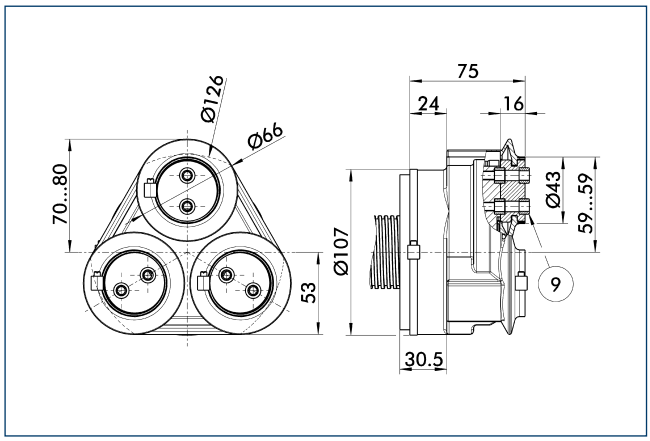

(9) For mounting screw connection diagram, see basic version

The HUE protective cover completely protects the gripper against external influences up to IP65 if an additional sealing of the cover bottom is provided as part of the application. The mounting diagram shifts by the height of the intermediate jaw.

Description	ID	IP class
Protection cover		
HUE EZN 100	0307044	65

ZBA L-plus 100 intermediate jaws

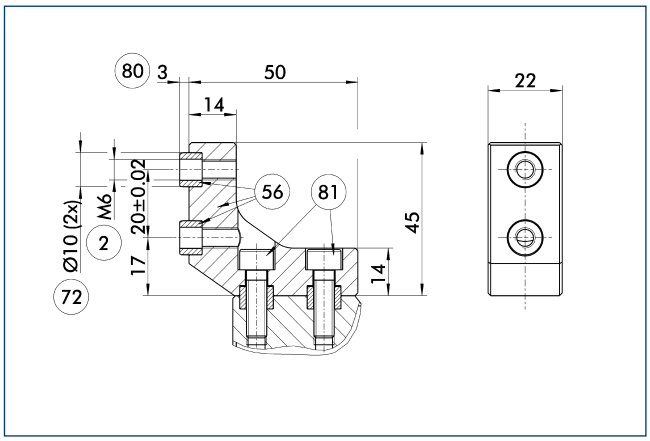

(2) Finger connection
(56) Included in delivery
(72) Fit for centering sleeves
(80) Depth of the centering sleeve hole in the mating part
(81) Not included in the scope of delivery

Optionally intermediate jaws can be used, enabling direct connection and alignment of top jaws and various standard accessories in Z-direction.

Description	ID	Material	Scope of delivery
Intermediate jaws			
ZBA-L-plus 100	0311742	Aluminum	1

BSWS jaw quick-change systems

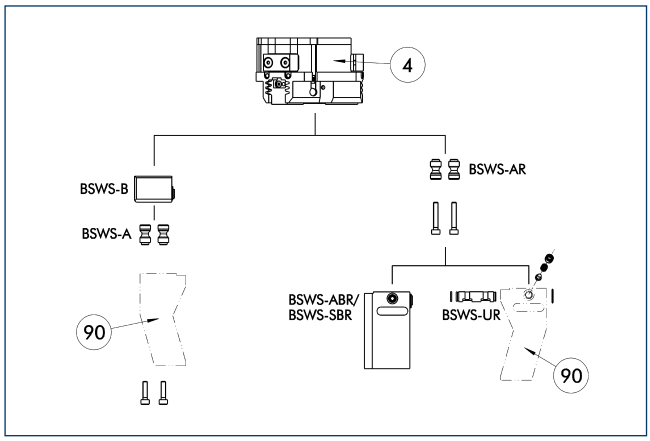

(4) Gripper
(90) Customized gripper fingers

There are various jaw quick-change systems available for the grippers. For detailed information, refer to the appropriate product.

Description	ID	
Jaw quick-change system adapter		
BSWS-AR 100	0300094	
BSWS-A 100	0303026	
Jaw quick-change system base		
BSWS-B 100	0303027	
Finger blanks with jaw quick-change system		
BSWS-ABR-PGZN-plus 100	0300074	
BSWS-SBR-PGZN-plus 100	0300084	
Jaw quick-change system reversed		
BSWS-UR 100	0302993	

ⓘ Only the systems listed in the table can be used.

UZB 100 universal intermediate jaw

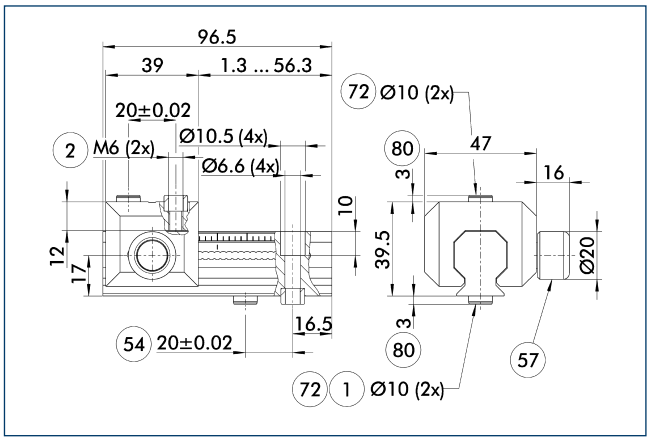

(1) Gripper connection
(2) Finger connection
(54) Optional right or left connection
(57) Locking
(72) Fit for centering sleeves
(80) Depth of the centering sleeve hole in the mating part

The universal intermediate jaw allows fast tool-free and reliable plugging and shifting of top jaws at the gripper.

Description	ID	Grid dimension [mm]
Universal intermediate jaw		
UZB 100	0300044	2.5
UZB-S 100	5518272	2.5
Finger blanks		
ABR-PGZN-plus 100	0300012	
SBR-PGZN-plus 100	0300022	

FMS-ZBA / ZBP 100 force-measuring jaws

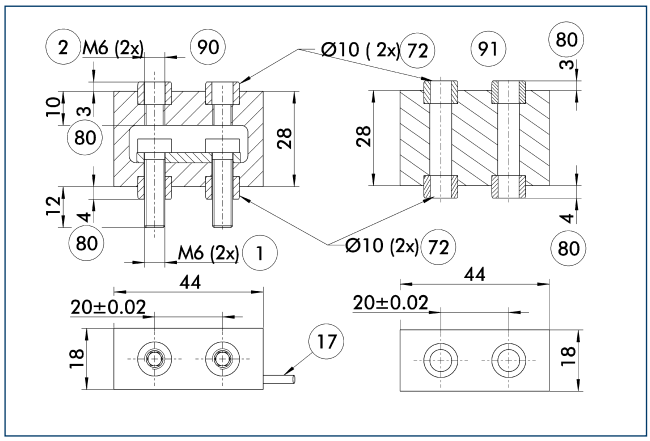

1 Gripper connection
2 Finger connection
17 Cable outlet
72 Fit for centering sleeves
80 Depth of the centering sleeve hole in the mating part
90 Active intermediate jaws
91 Passive intermediate jaws

Force measuring jaws measure gripping forces, but can also determine workpiece weights or dimensional deviations. There are active and passive intermediate jaws (FMS-ZBA or FMS-ZBP). At least one active force measuring jaw is required per gripper, the rest can be passive. For each active jaw, a FMS-A control unit and a FMS-AK connection cable are required.

Description	ID	Often combined
Active intermediate jaws		
FMS-ZBA 100	0301836	
FMS-ZBP 100	0301837	
Electronic processor		
FMS-A1	0301810	

ABR- / SBR-PGZN-plus 100 finger blanks

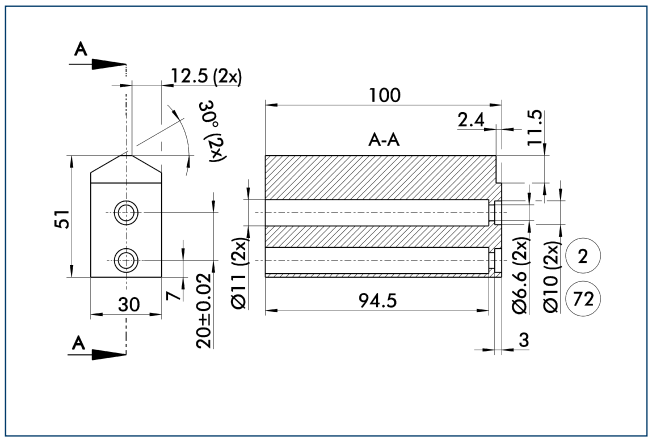

2 Finger connection
72 Fit for centering sleeves

Finger blanks for customized subsequent machining.

Description	ID	Material	Scope of delivery
Finger blanks			
ABR-PGZN-plus 100	0300012	Aluminum	1
SBR-PGZN-plus 100	0300022	16MnCr5	1

Power supply cable for SCHUNK ECM

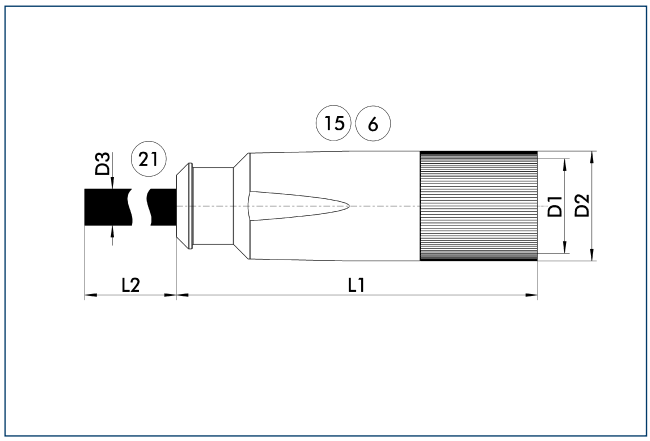

(6) Connection module side (21) Connection controller side
(15) Socket

The power cables are supplied with open wires on the controller side for direct installation at the external ECM controller. The cables are available in robot-compatible (KAR) or drag chain compatible (KA) versions.

Description	ID	L_2 [m]	D_1
Power supply cable for SCHUNK ECM			
KA GLN1707-LK-00500-7	0306480	5	M17
KA GLN1707-LK-01000-7	0306481	10	M17
KA GLN1707-LK-01500-7	0306482	15	M17
KA GLN1707-LK-02000-7	0306483	20	M17
KAR GLN1707-LK-00500-7	0306485	5	M17
KAR GLN1707-LK-01000-7	0306486	10	M17
KAR GLN1707-LK-01500-7	0306487	15	M17
KAR GLN1707-LK-02000-7	0306488	20	M17

ⓘ Please observe the bending radius (7.5 times the cable diameter).

Sensor cable for SCHUNK ECM

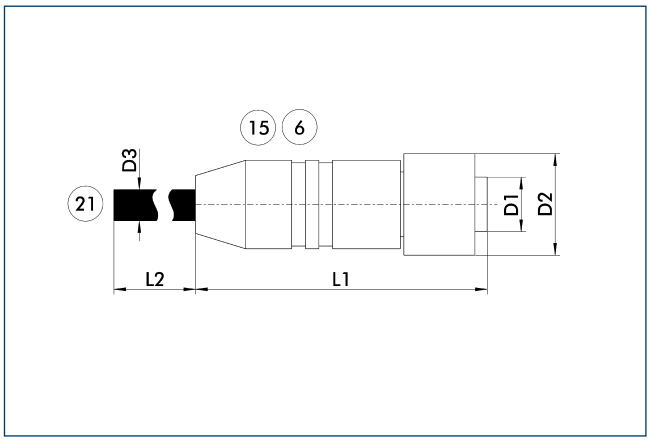

(6) Connection module side (21) Connection controller side
(15) Socket

The sensor cables are supplied with pre-assembled plugs for direct assembly on the external ECM controller. The cables are available in robot-compatible (KAR) or drag chain compatible (KA) versions.

Description	ID	L_2 [m]	D_1
Sensor cable for SCHUNK ECM			
KA GLN1208-GK-00500-7	0306470	5	M12
KA GLN1208-GK-01000-7	0306471	10	M12
KA GLN0908-GK-01500-7	0306472	15	M12
KA GLN1208-GK-02000-7	0306473	20	M12
KAR GLN1208-GK-00500-7	0306475	5	M12
KAR GLN1208-GK-01000-7	0306476	10	M12
KAR GLN1208-GK-01500-7	0306477	15	M12
KAR GLN1208-GK-02000-7	0306478	20	M12

ⓘ Please observe the bending radius (7.5 times the cable diameter).

ECM motor controller

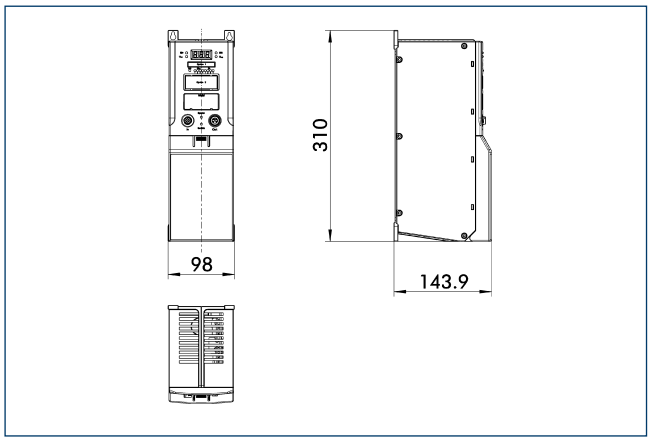

The ECM is required for operating the ERS rotary module (48 V) and the EGN and EZN electric grippers.

Description	
Controller	
ECM - EZN 100	

Versatile Grippers with easy Actuation due tocurrent Pulse and a high Holding Force.

Magnetic Grippers

EGM Magnetic Gripper

Series	Size	Page
EGM		1554
EGM	M-Q	1558
EGM	M-L	1564

Series	Size	Page
EGM	B-Q	1570
EGM	B-L	1580

Strong. Lightweight. Compact.
EGM Magnetic Gripper

Electric permanent magnetic gripper for energy-efficient handling of ferromagnetic workpieces

Field of Application

Universal compact gripper for large diversity of parts in clean to slightly contaminated work environment

Advantages – Your benefit

High holding forces at lowest space for reliable part handling in compact machines

Low weight for high dynamics in challenging applications

Reliable preservation of holding force to ensure reliable operation even in scenarios with emergency stop

Energy efficiency: Electricity is only required for magnetisation and demagnetisation for an economic and careful managment of resources

Variable number of magnetic poles and possible for adaptation to any common robot to ensure the optimal adaption to each application

Free from interfering contour allowing access to the workpiece from five sides by unnecessary gripper fingers

Sizes	Weight	Max. workpiece weight	Max. magnet surface
Quantity: 4	1 .. 25 kg	118 kg	196 cm²

Functional Description

The magnetic flow for holding the workpiece is generated by the AlNiCo magnets. It penetrates the steel poles in a deactivated state of the neodymium magnets and closes the magnetic circuit through the steel base body. With activation of the system, an electric current pulse is conducted through the coil, which reverses the polarity of the AlNiCo magnets accordingly.
The magnetic flux can not pass the neodym magnets anymore and has to pass via the workpiece into the opposite pole, creating a holding force.

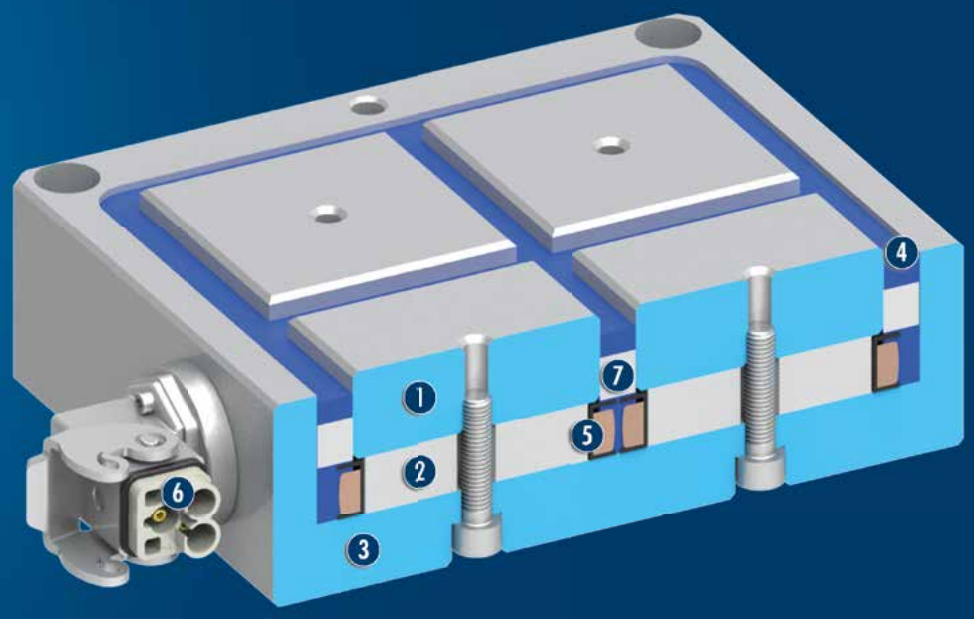

① **Steel poles with bore**
for comfortable adaption of individualized pole extensions

② **Polarity reversible AlNiCo-magnet**
surrounded by an electromagnetic coil

③ **Monobloc base body made of steel**
for optimal guidance of the magnetic flux

④ **Potting compound of synthetic resin**
prevents penetration of cooling lubricant and swarf

⑤ **Copper coil**
for pole reversal of the AlNiCo-magnets

⑥ **Cable connector of Harting**
guarantees safe connection

⑦ **Non-pole-reversing neodymium permanent magnets**
lead the magnetic flux via the work piece

CAD data, operating manuals and other current product documents are available at **www.schunk.com**

General Notes about the Series

Operating principle: Magnetization of permanent magnets

Housing material: Steel

Base jaw material: Steel

Actuation: Electrical current pulse for activation and deactivation of the system

Warranty: 24 months (details, general terms and conditions and operating manuals can be downloaded at www.schunk.com)

Scope of delivery: Accessory kit with centering sleeves

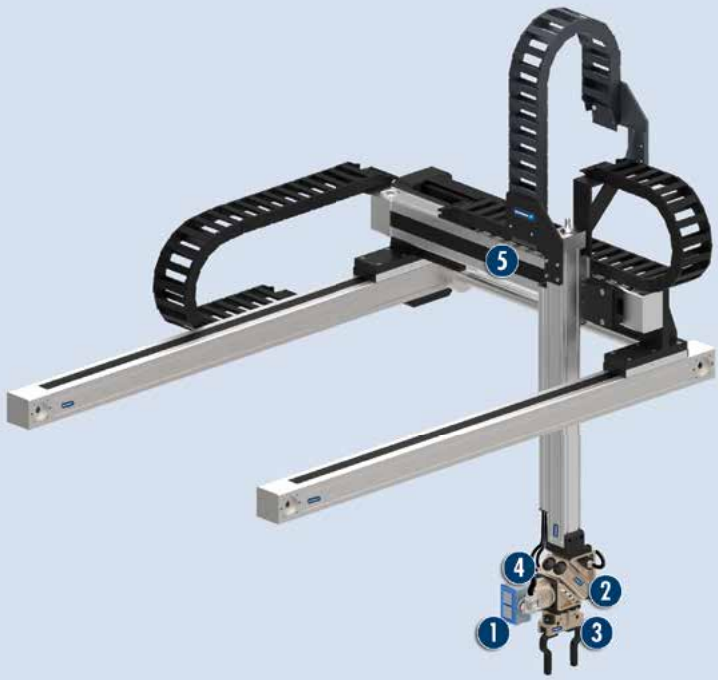

Application example

Electrically drive three-axis gantry with double gripper unit comprising electric magnetic gripper and pneumatic gripper, for the handling of a wide variety of workpieces.

1. EGM Magnetic Gripper
2. SRH-plus Swivel Head
3. PGN-plus 2-Finger Parallel Gripper
4. AGE-XY Compensation Unit
5. RPE Room Gantry electric

SCHUNK offers more ...

The following components make the product EGM even more productive – the suitable addition for the highest functionality, flexibility, reliability, and controlled production.

Power Supply Cable

ECG-C Magnetic Controller

Distributor Box

Handpanel

PVL Pole Extensions

Gaussmeter

ⓘ Further information regarding the products can be found on the following product pages or at www.schunk.com. Please contact us for further information: SCHUNK technical hotline +49-7133-103-2696

Options and special Information

Control via external controller: The electrical control of the gripper takes place via the separately available controller. The interface to the control unit is provided by digital inputs and outputs.

EGM M-Q

SCHUNK Grippers electric | Magnetic Grippers | Magnetic Gripper

Technical data

Description		EGM-M-Q-30-1-FX	EGM-M-Q-50-1-FX	EGM-M-Q-70-1-FX
ID		0306350	0306351	0306352
Weight	[kg]	1.3	3.45	7.1
Number of poles		2	2	2
Magnet area	[cm²]	18.4	50.4	98.1
Minimum workpiece thickness	[mm]	6	12	16
Load for horizontal magnet surface	[kg]	18	80	165
Load for vertical magnet surface	[kg]	7	32	65
max. activations/minute	[1/min]	20	6	10
Module temperature increasement in case of 5/15 activations/minute	[°C]	13/33	37/80	24/53
IP class		54	54	54
Soleonid current	[A]	3	2.3	3.1
Cable length	[cm]	30	30	30
Magnet Controller Data				
Magnet controller type		ECG 01	ECG 02	ECG 02
Supply voltage	[V AC]	400	400	400
Maximum current	[A]	32	32	32
max. number of modules per controller		28	26	19

EGM-M 30Q-1FX main view

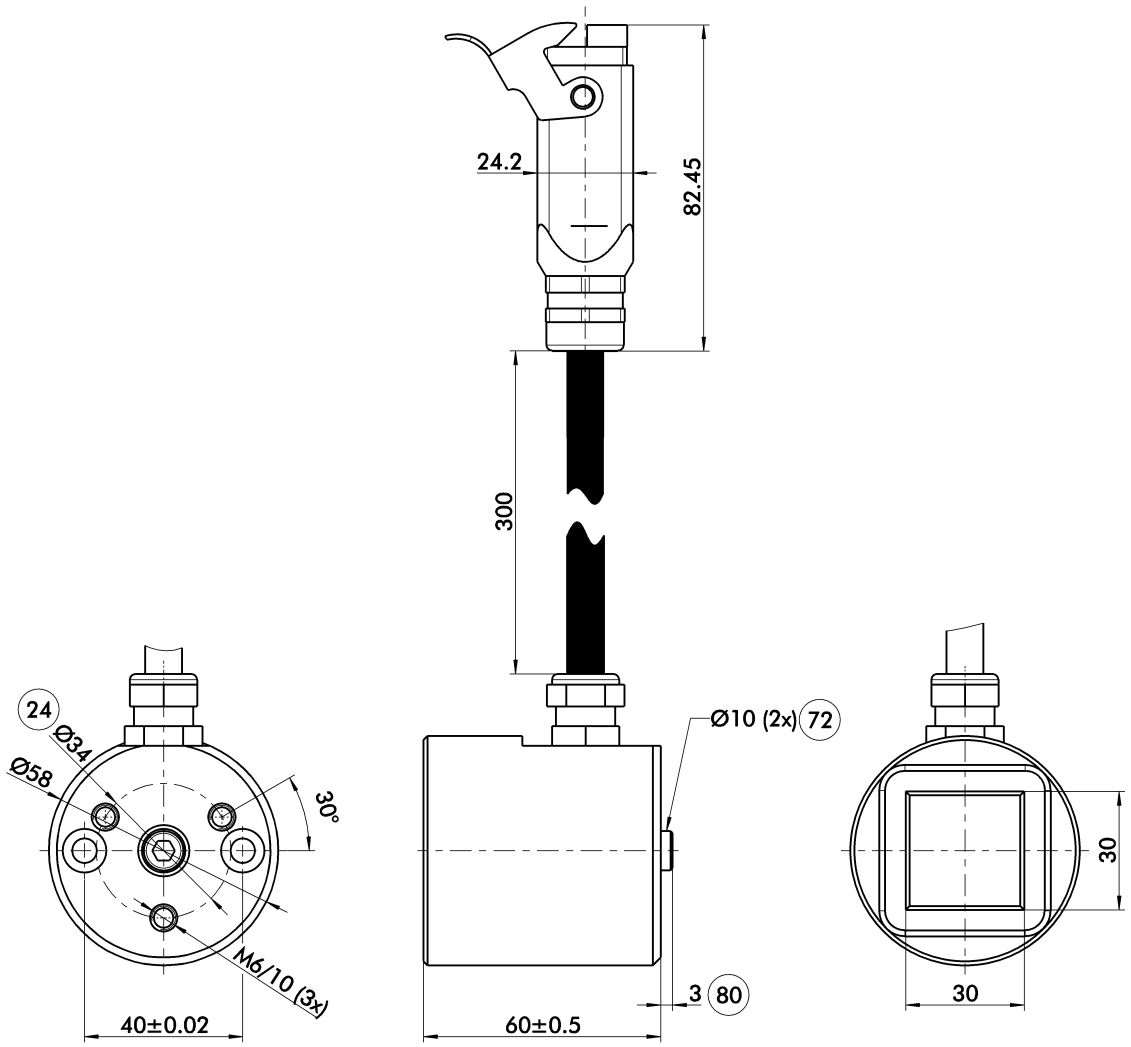

The drawing shows the magnetic gripper in basis configuration, without any additional accessories.

24 Bolt circle
72 Fit for centering sleeves
80 Depth of the centering sleeve hole in the mating part

EGM-M 50Q-1FX main view

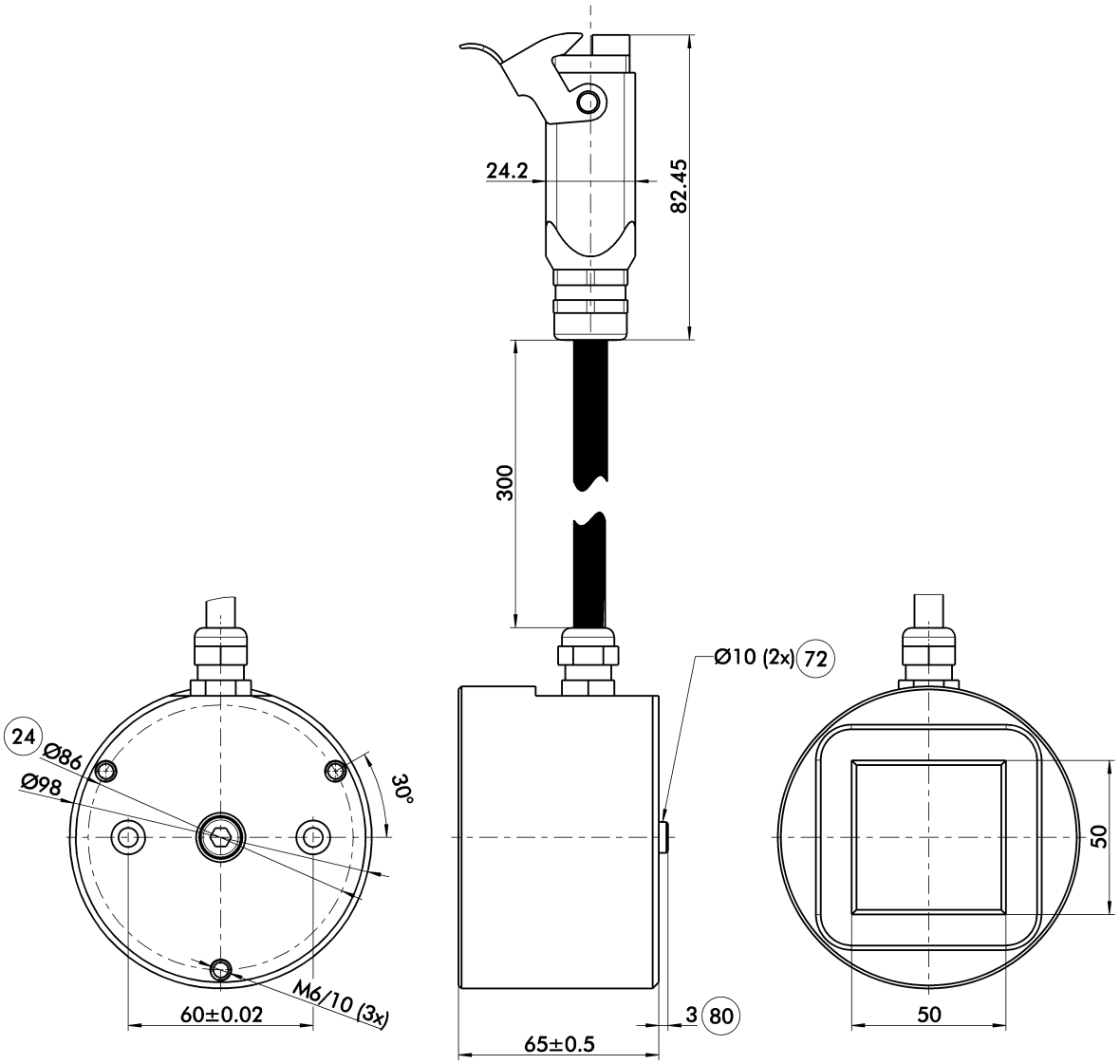

The drawing shows the magnetic gripper in basis configuration, without any additional accessories.

24 Bolt circle
72 Fit for centering sleeves
80 Depth of the centering sleeve hole in the mating part

EGM-M 70Q-1FX main view

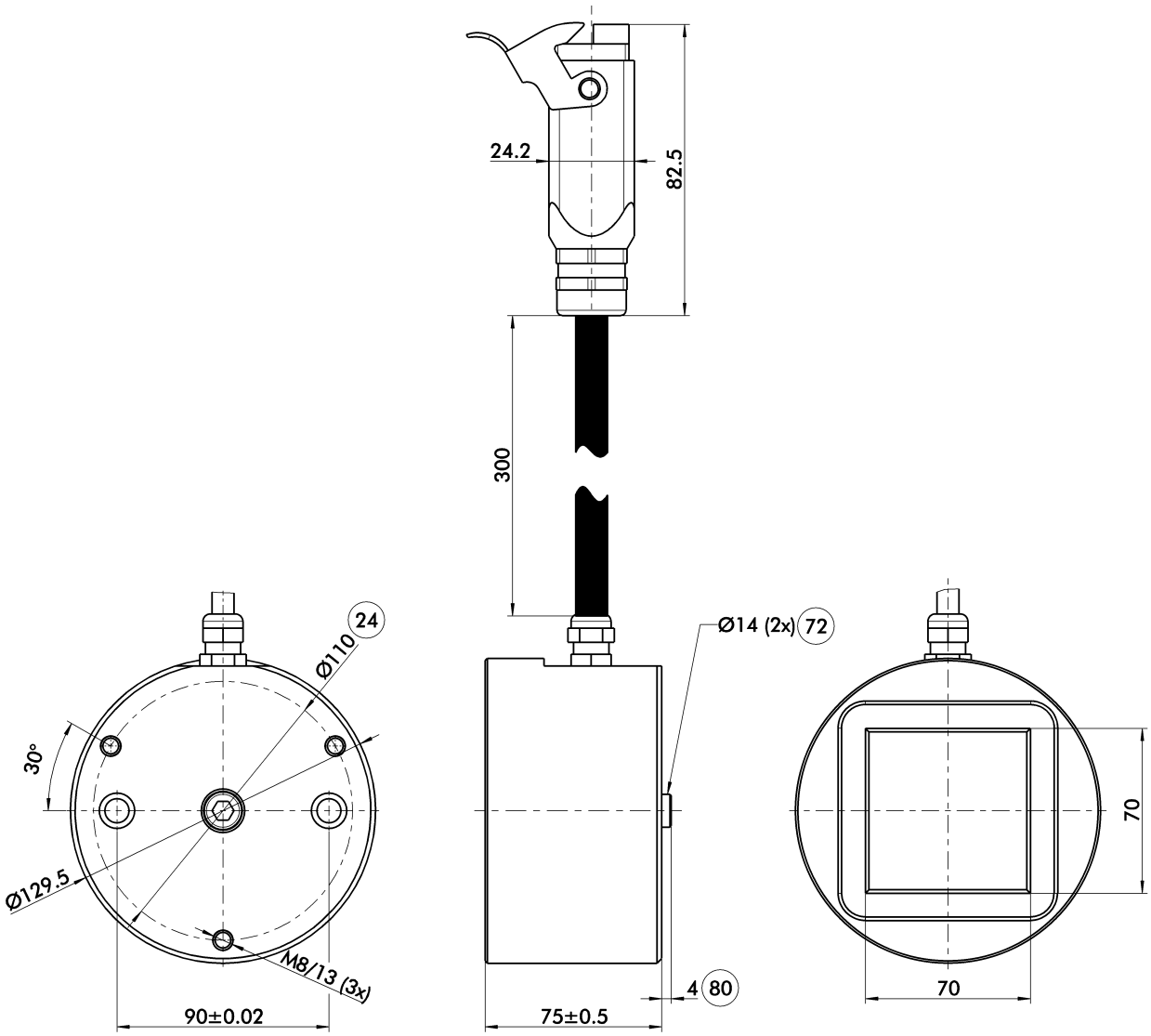

The drawing shows the magnetic gripper in basis configuration, without any additional accessories.

24 Bolt circle
72 Fit for centering sleeves
80 Depth of the centering sleeve hole in the mating part

Connection cables

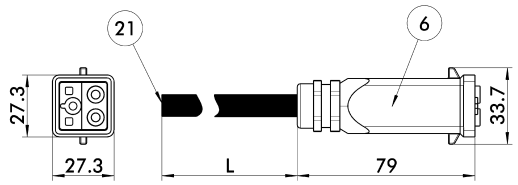

(6) Connection module side (21) Connection controller side

Please observe the bending radius (7.5 times the cable diameter).

Description	ID	L_2 [m]
Connection cable EGM		
KA GLNQS03-LK-00500-J	0306302	5
KA GLNQS03-LK-01000-J	0306303	10
KA GLNQS03-LK-01500-J	0306304	15
KA GLNQS03-LK-02000-J	0306305	20

ECG-C magnetic controller

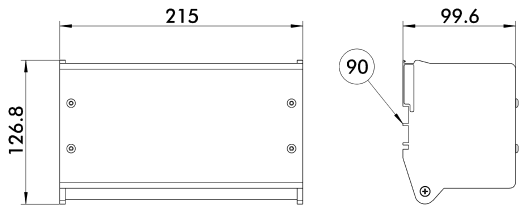

(90) Mounting on DIN rail

For actuating the EGM a control unit ECG is needed. Version "C" allows digital switching of an EGM

Description	ID	
Controller		
ECG-C 01	0306300	
ECG-C 02	0306301	

ⓘ One ECG can control multiple magnets at one time. For independent actuation of several magnets, several control units are needed.

ECG-R magnetic controller

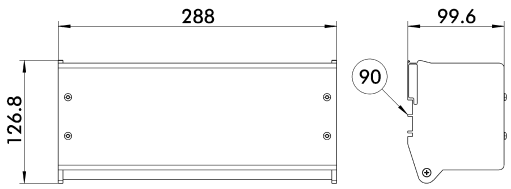

(90) Mounting on DIN rail

For actuating the EGM a control unit ECG is needed. Version "R" allows the setting of eight different force levels.

Description	ID	
Controller		
ECG-R 01	0306390	
ECG-R 02	0306391	

ⓘ One ECG can control multiple magnets at one time. For independent actuation of several magnets, several control units are needed.

ECG-W magnetic controller

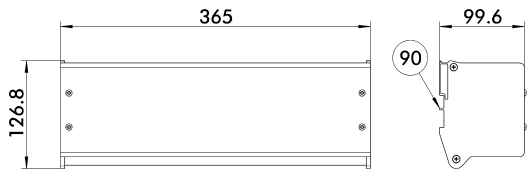

(90) Mounting on DIN rail

For actuating the EGM a control unit ECG is needed. Version "W" allows the digital switching of an EGM, while it is holding of a workpiece during a welding process.

Description	ID	
Controller		
ECG-W 01	0306395	
ECG-W 02	0306396	

ⓘ One ECG can control multiple magnets at one time. For independent actuation of several magnets, several control units are needed.

2-way distributor box

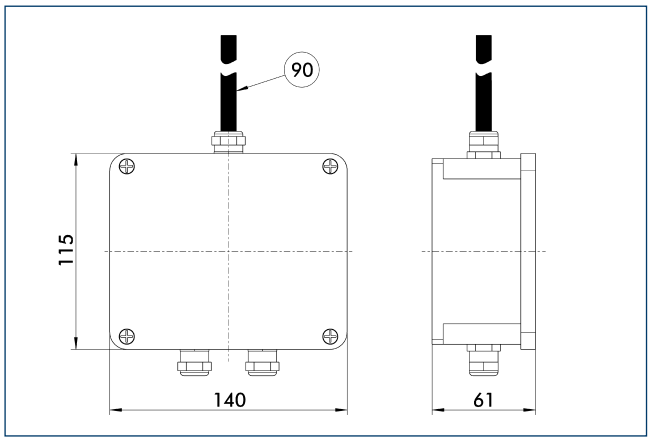

(90) Cable length 10 m, open wires

Several EGM can be connected to one distributor box. This makes the wiring of the EGM with ECG controllers easier.

Description	ID	
2-way distributor box		
EGM-JB 2	0306432	

4-way distributor box

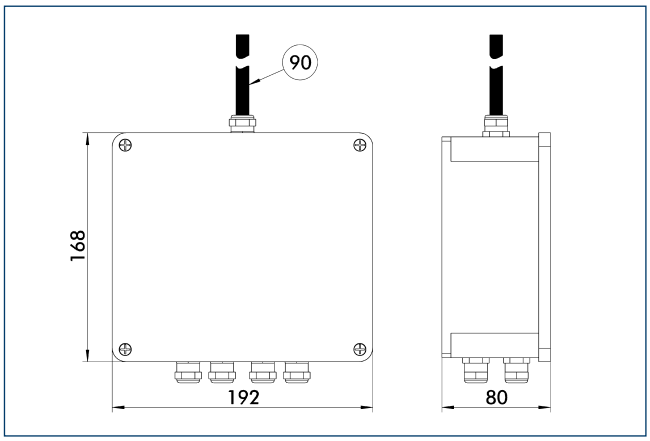

(90) Cable length 10 m, open wires

Several EGM can be connected to one distributor box. This makes the wiring of the EGM with ECG controllers easier.

Description	ID	
4-way distributor box		
EGM-JB 4	0306434	

8-way distributor box

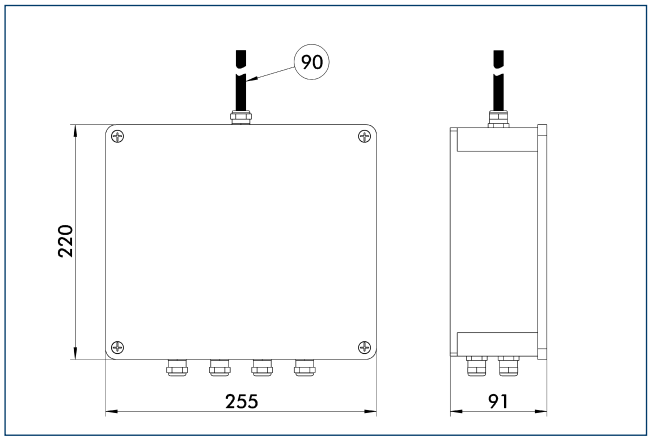

(90) Cable length 10 m, open wires

Several EGM can be connected to one distributor box. This makes the wiring of the EGM with ECG controllers easier.

Description	ID	
8-way distributor box		
EGM-JB 8	0306438	

EGM M-L

SCHUNK Grippers electric | Magnetic Grippers | Magnetic Gripper

Technical data

Description		EGM-M-L-08-1-FX	EGM-M-L-15-1-FX	EGM-M -L-30-1-FX
ID		0306360	0306361	0306362
Weight	[kg]	1	2.1	3.1
Number of poles		2	2	2
Magnet area	[cm²]	12	22.5	36.9
Minimum workpiece thickness	[mm]	3	5	10
Load for horizontal magnet surface	[kg]	10	22	60
Load for vertical magnet surface	[kg]	4	9	24
max. activations/minute	[1/min]	16	16	12
Module temperature increasement in case of 5/15 activations/minute	[°C]	18/39	15/40	22/49
IP class		54	54	54
Soleonid current	[A]	3.7	2.6	2.2
Cable length	[cm]	30	30	30
Magnet Controller Data				
Magnet controller type		ECG 01	ECG 02	ECG 02
Supply voltage	[V AC]	400	400	400
Maximum current	[A]	32	32	32
max. number of modules per controller		23	17	32

EGM-M 08L-1FX main view

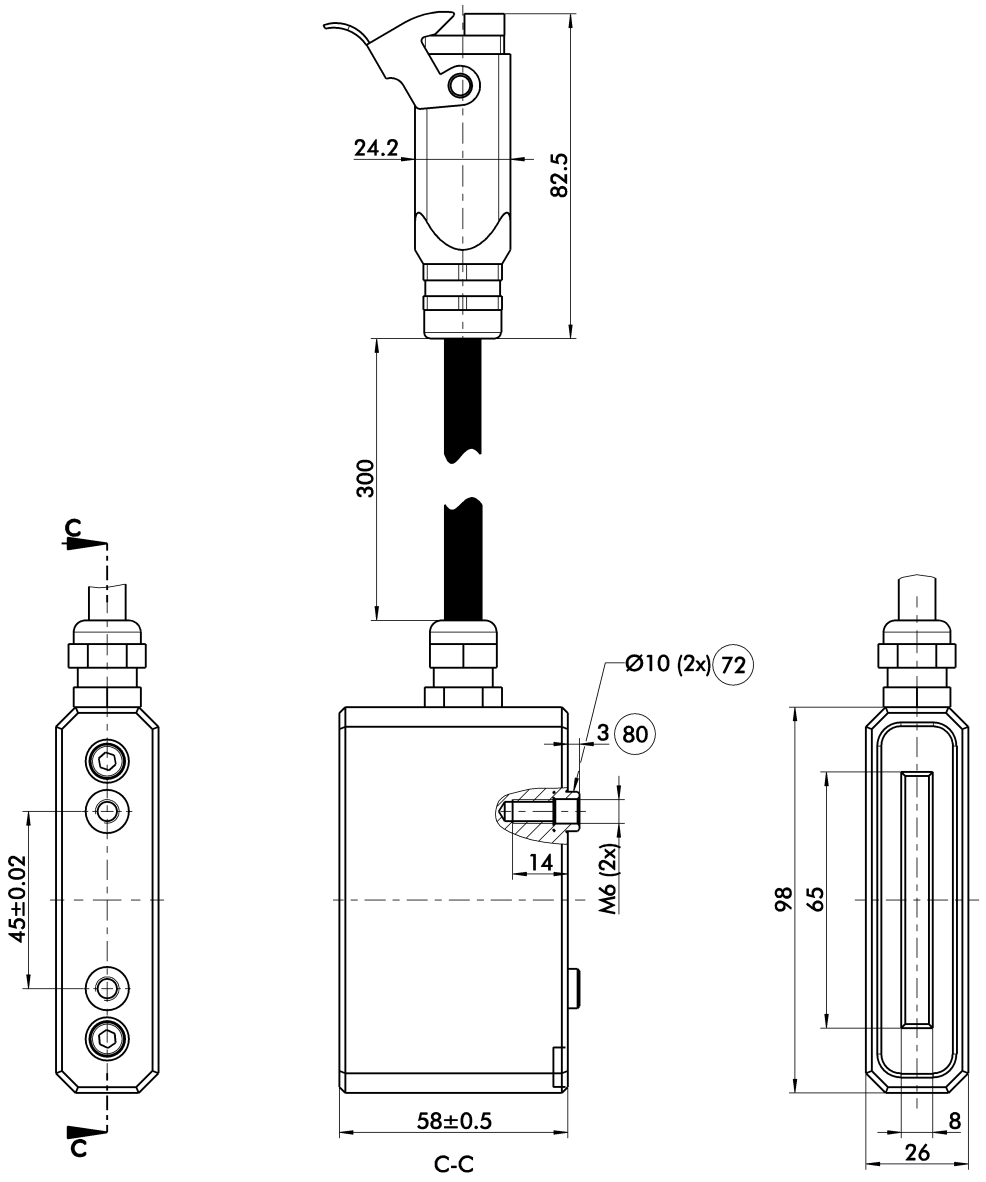

The drawing shows the magnetic gripper in basis configuration, without any additional accessories.

72 Fit for centering sleeves

80 Depth of the centering sleeve hole in the mating part

EGM-M 15L-1FX main view

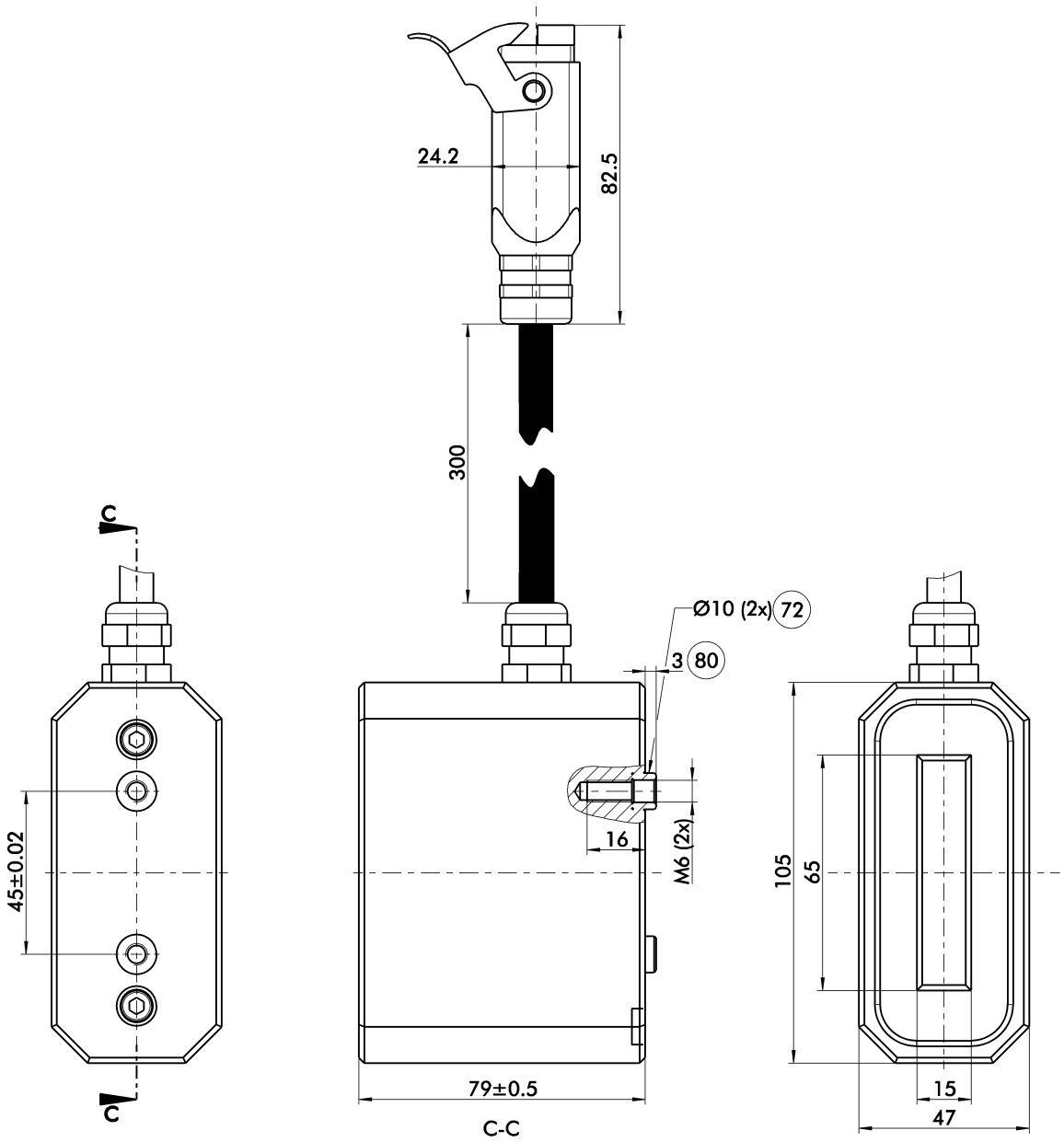

The drawing shows the magnetic gripper in basis configuration, without any additional accessories.

72 Fit for centering sleeves

80 Depth of the centering sleeve hole in the mating part

EGM-M 30L-1FX main view

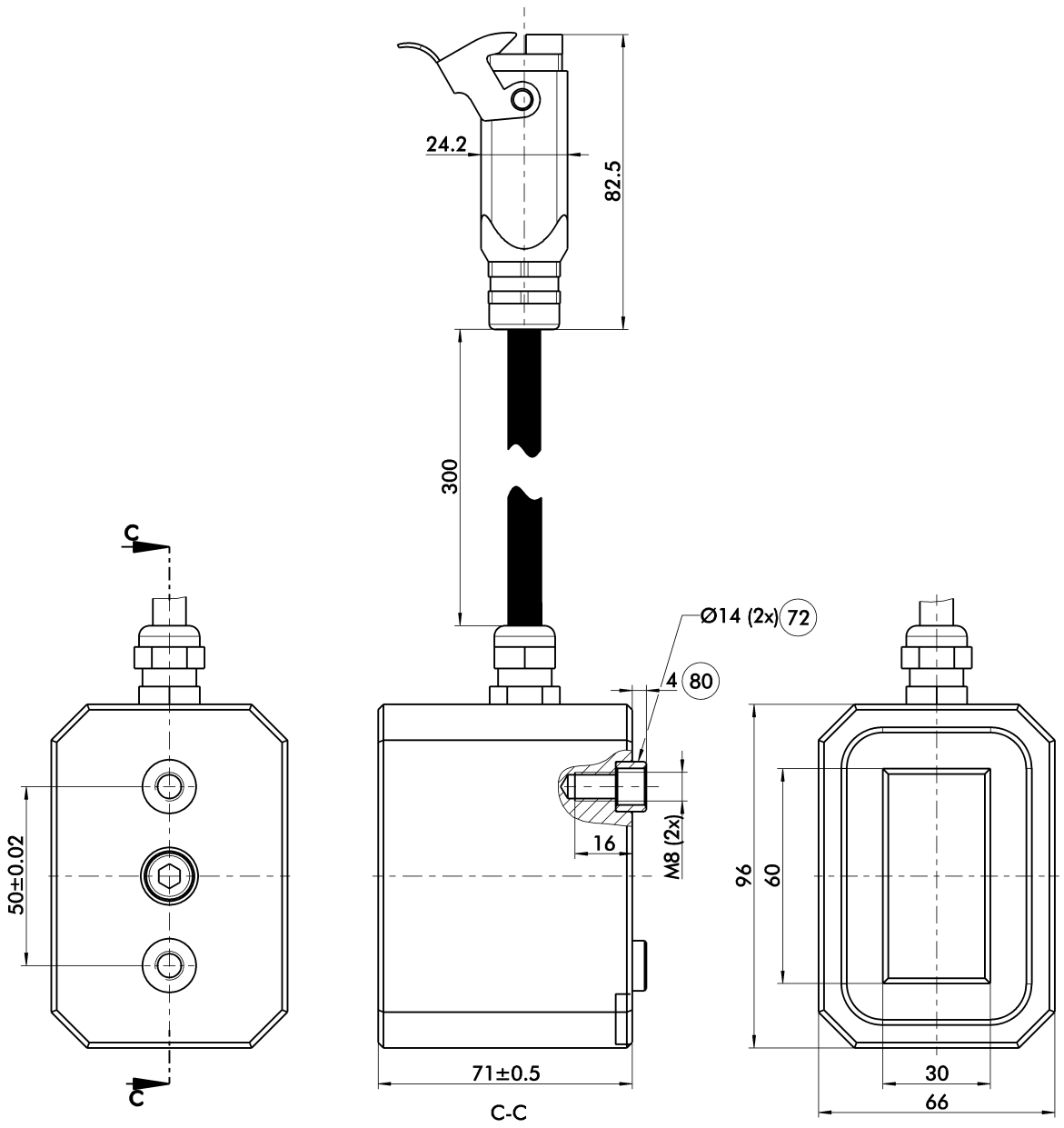

The drawing shows the magnetic gripper in basis configuration, without any additional accessories.

72 Fit for centering sleeves

80 Depth of the centering sleeve hole in the mating part

Connection cables

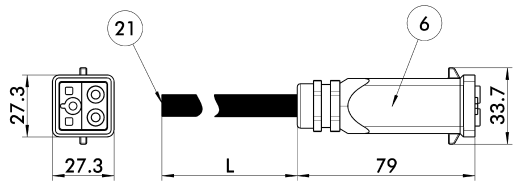

6 Connection module side 21 Connection controller side

Please observe the bending radius (7.5 times the cable diameter).

Description	ID	L_2 [m]
Connection cable EGM		
KA GLNQS03-LK-00500-J	0306302	5
KA GLNQS03-LK-01000-J	0306303	10
KA GLNQS03-LK-01500-J	0306304	15
KA GLNQS03-LK-02000-J	0306305	20

ECG-C magnetic controller

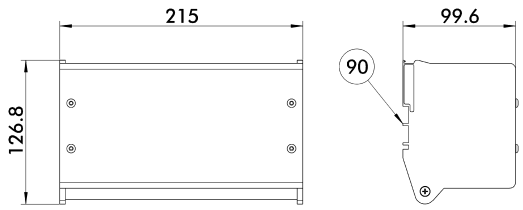

90 Mounting on DIN rail

For actuating the EGM a control unit ECG is needed. Version "C" allows digital switching of an EGM

Description	ID	
Controller		
ECG-C 01	0306300	
ECG-C 02	0306301	

ⓘ One ECG can control multiple magnets at one time. For independent actuation of several magnets, several control units are needed.

ECG-R magnetic controller

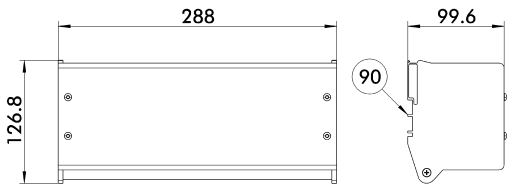

90 Mounting on DIN rail

For actuating the EGM a control unit ECG is needed. Version "R" allows the setting of eight different force levels.

Description	ID	
Controller		
ECG-R 01	0306390	
ECG-R 02	0306391	

ⓘ One ECG can control multiple magnets at one time. For independent actuation of several magnets, several control units are needed.

ECG-W magnetic controller

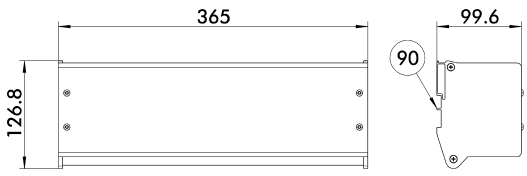

90 Mounting on DIN rail

For actuating the EGM a control unit ECG is needed. Version "W" allows the digital switching of an EGM, while it is holding of a workpiece during a welding process.

Description	ID	
Controller		
ECG-W 01	0306395	
ECG-W 02	0306396	

ⓘ One ECG can control multiple magnets at one time. For independent actuation of several magnets, several control units are needed.

2-way distributor box

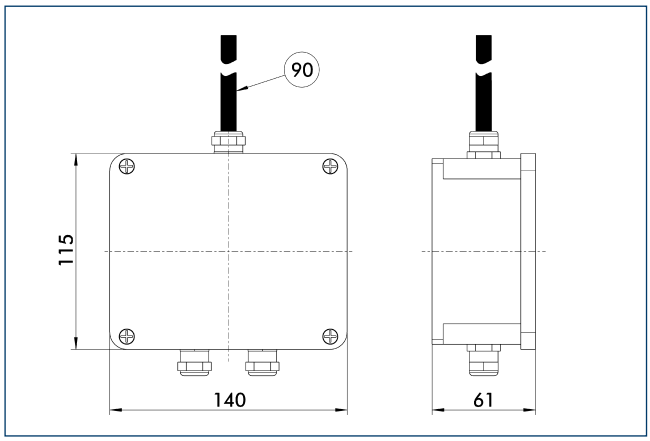

90 Cable length 10 m, open wires

Several EGM can be connected to one distributor box. This makes the wiring of the EGM with ECG controllers easier.

Description	ID	
2-way distributor box		
EGM-JB 2	0306432	

4-way distributor box

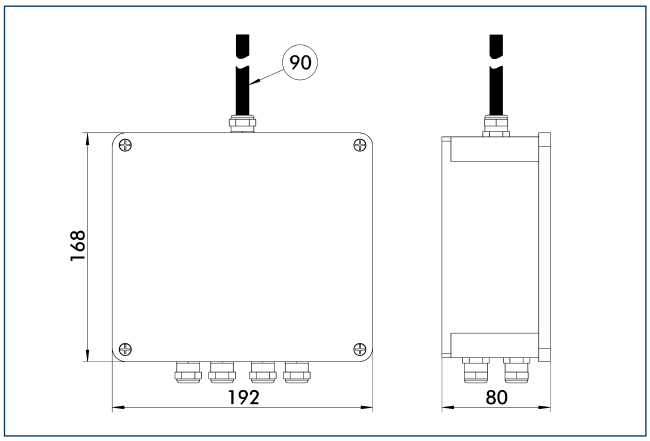

90 Cable length 10 m, open wires

Several EGM can be connected to one distributor box. This makes the wiring of the EGM with ECG controllers easier.

Description	ID	
4-way distributor box		
EGM-JB 4	0306434	

8-way distributor box

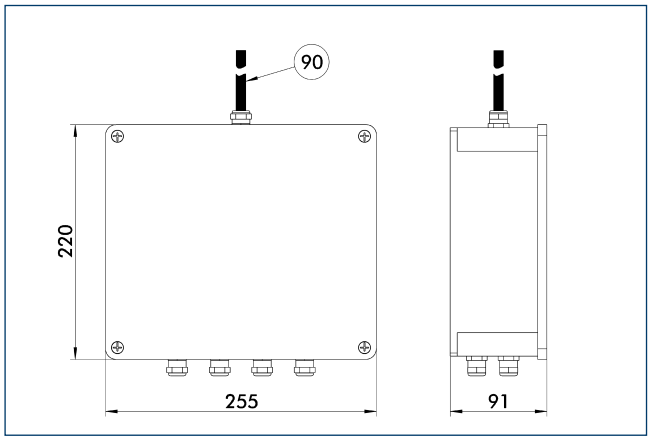

90 Cable length 10 m, open wires

Several EGM can be connected to one distributor box. This makes the wiring of the EGM with ECG controllers easier.

Description	ID	
8-way distributor box		
EGM-JB 8	0306438	

EGM B-Q

SCHUNK Grippers electric | Magnetic Grippers | Magnetic Gripper

Technical data

Description		EGM-B-Q-50-1x2	EGM-B-Q-50-1x4	EGM-B-Q-50-2x2	EGM-B-Q-70-1x2	EGM-B-Q-70-1x4	EGM-B-Q-70-2x2
ID		0306370	0306372	0306371	0306380	0306382	0306381
Weight	[kg]	5.5	13	8.5	9	25	15
Number of poles		2	4	4	2	4	4
Magnet area	[cm²]	50	100	96.04	89.78	196	179.56
Minimum workpiece thickness	[mm]	12	12	14	14	18	14
Load for horizontal magnet surface	[kg]	75	175	175	120	296	290
Load for vertical magnet surface	[kg]	30	70	70	48	118	115
max. activations/minute	[1/min]	20	8	8	15	10	10
Module temperature increasement in case of 5/15 activations/minute	[°C]	12/30	30/68	30/68	15/40	24/60	24/60
IP class		52	52	52	52	52	52
Soleonid current	[A]	2.9	9.5	9.5	6.4	12.3	12.3
Magnet Controller Data							
Magnet controller type		ECG 02	ECG 02	ECG 02	ECG 02	ECG 02	ECG 02
Supply voltage	[V AC]	400	400	400	400	400	400
Maximum current	[A]	32	32	32	32	32	32
max. number of modules per controller		25	7	7	9	4	5

EGM-B 50Q-1x2 main view

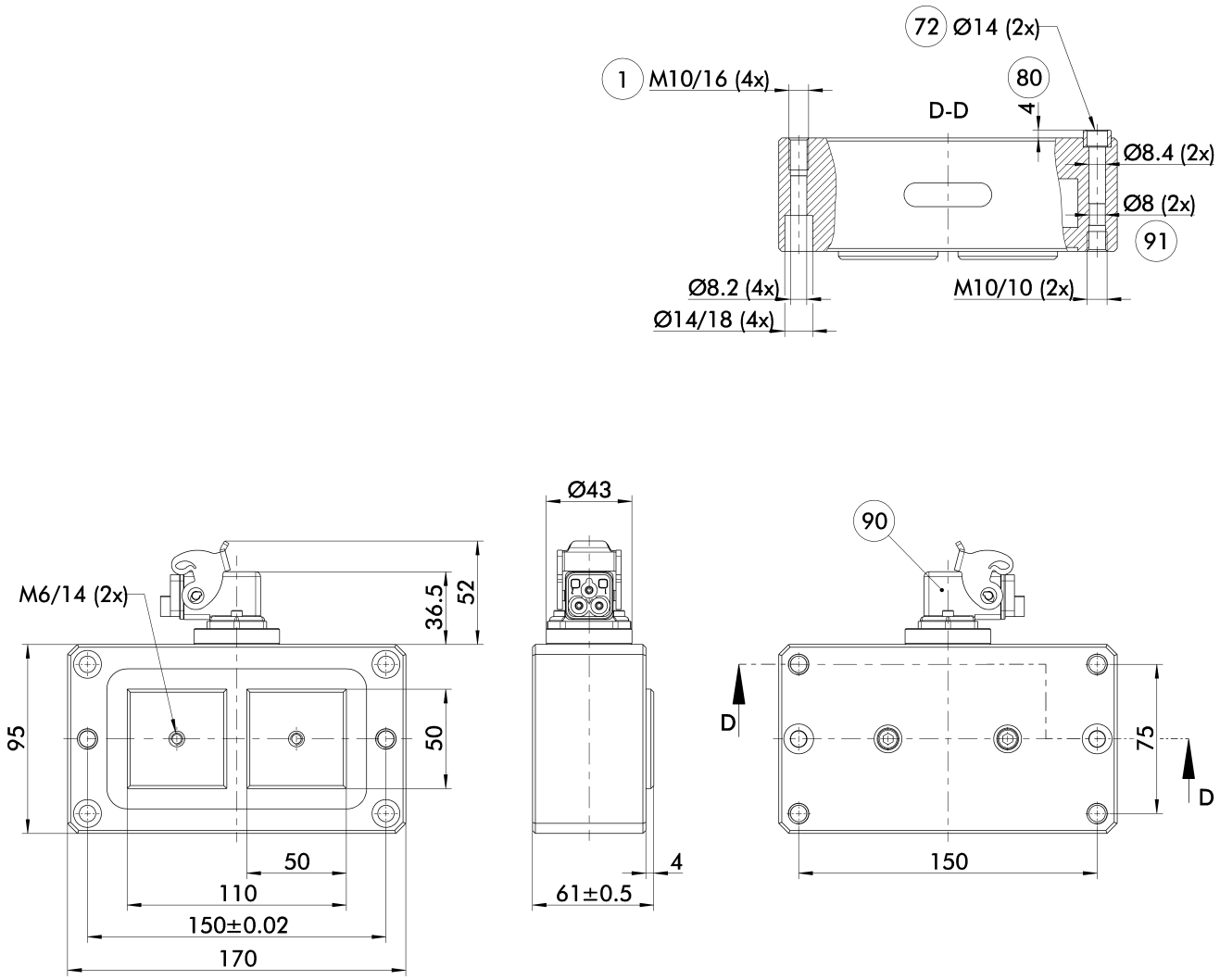

The drawing shows the magnetic gripper in basis configuration, without any additional accessories.

1 Gripper connection
72 Fit for centering sleeves
80 Depth of the centering sleeve hole in the mating part
90 Connector
91 Fitting for pole extension

EGM-B 50Q-1x4 main view

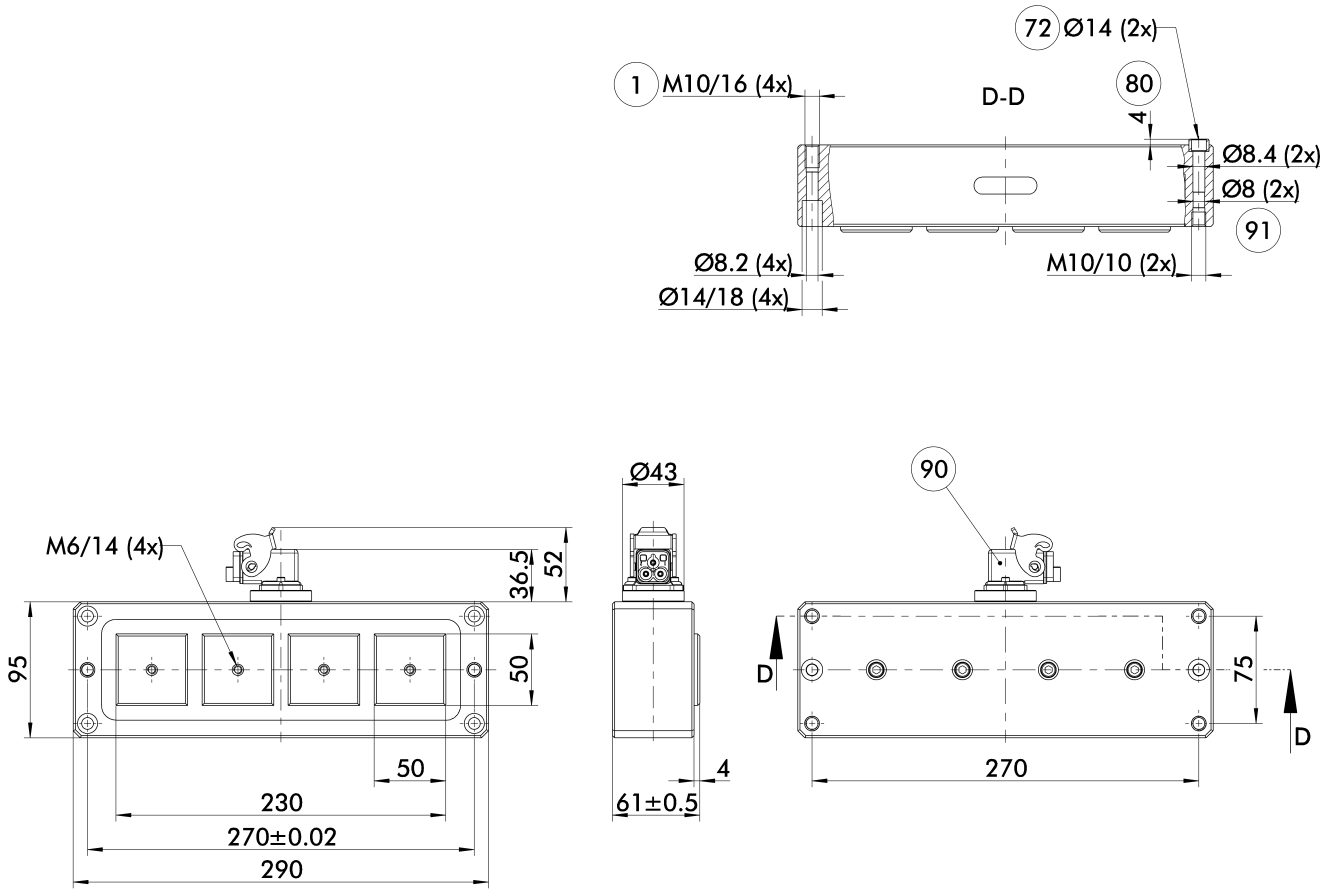

The drawing shows the magnetic gripper in basis configuration, without any additional accessories.

1 Gripper connection
72 Fit for centering sleeves
80 Depth of the centering sleeve hole in the mating part
90 Connector
91 Fitting for pole extension

EGM-B 50Q-2x2 main view

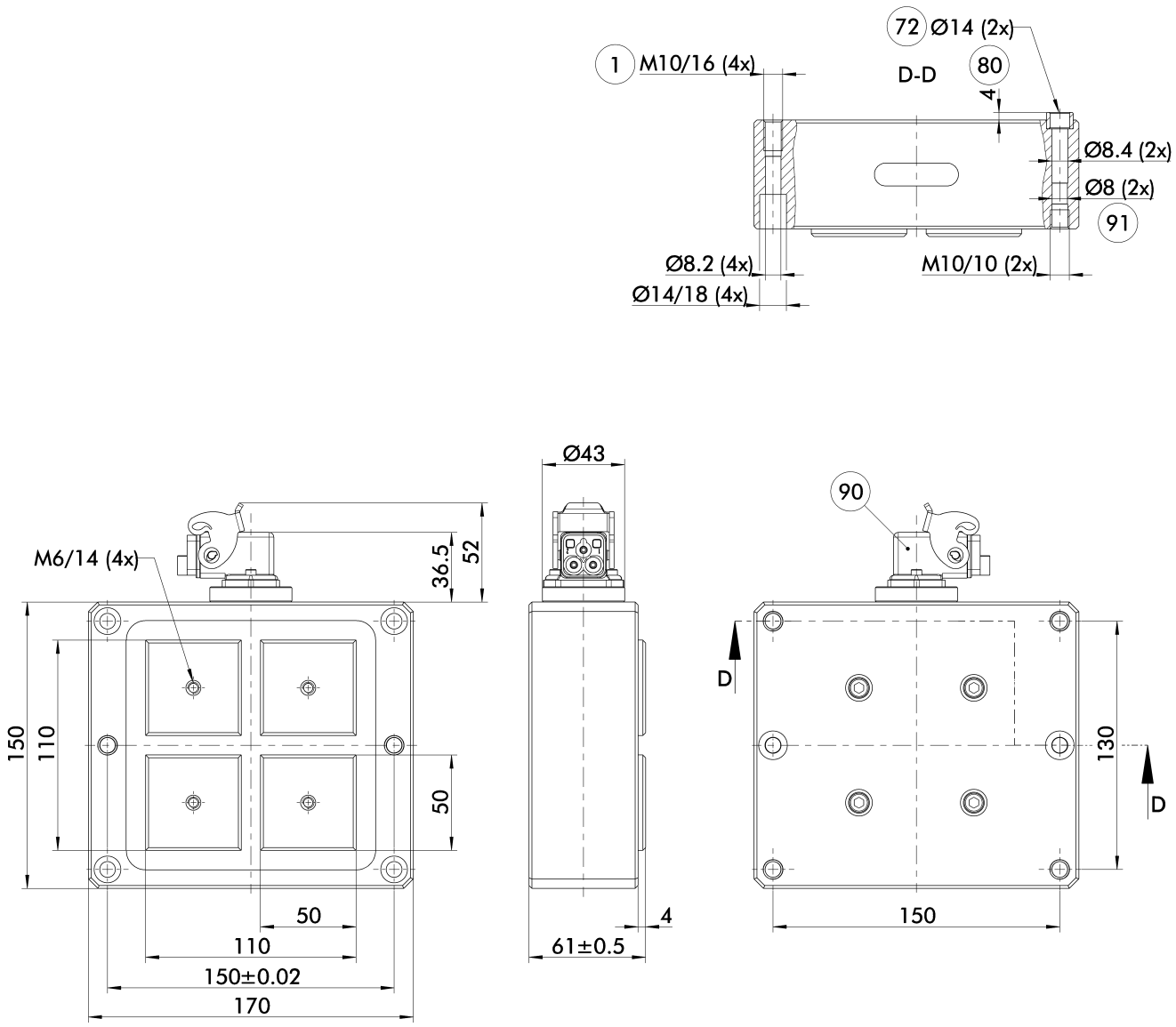

The drawing shows the magnetic gripper in basis configuration, without any additional accessories.

1 Gripper connection
72 Fit for centering sleeves
80 Depth of the centering sleeve hole in the mating part
90 Connector
91 Fitting for pole extension

EGM-B 70Q-1x2 main view

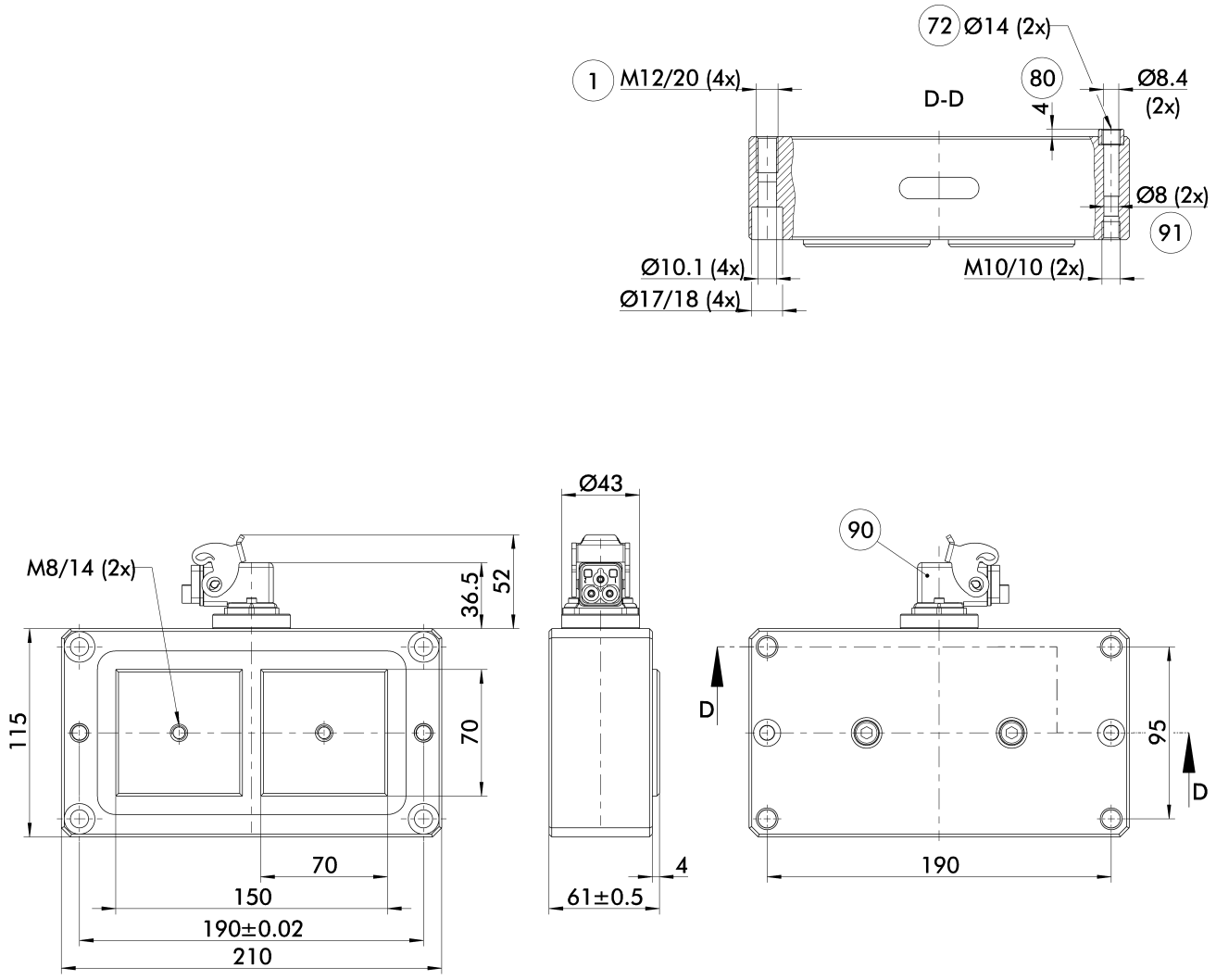

The drawing shows the magnetic gripper in basis configuration, without any additional accessories.

1 Gripper connection
72 Fit for centering sleeves
80 Depth of the centering sleeve hole in the mating part
90 Connector
91 Fitting for pole extension

EGM-B 70Q-1x4 main view

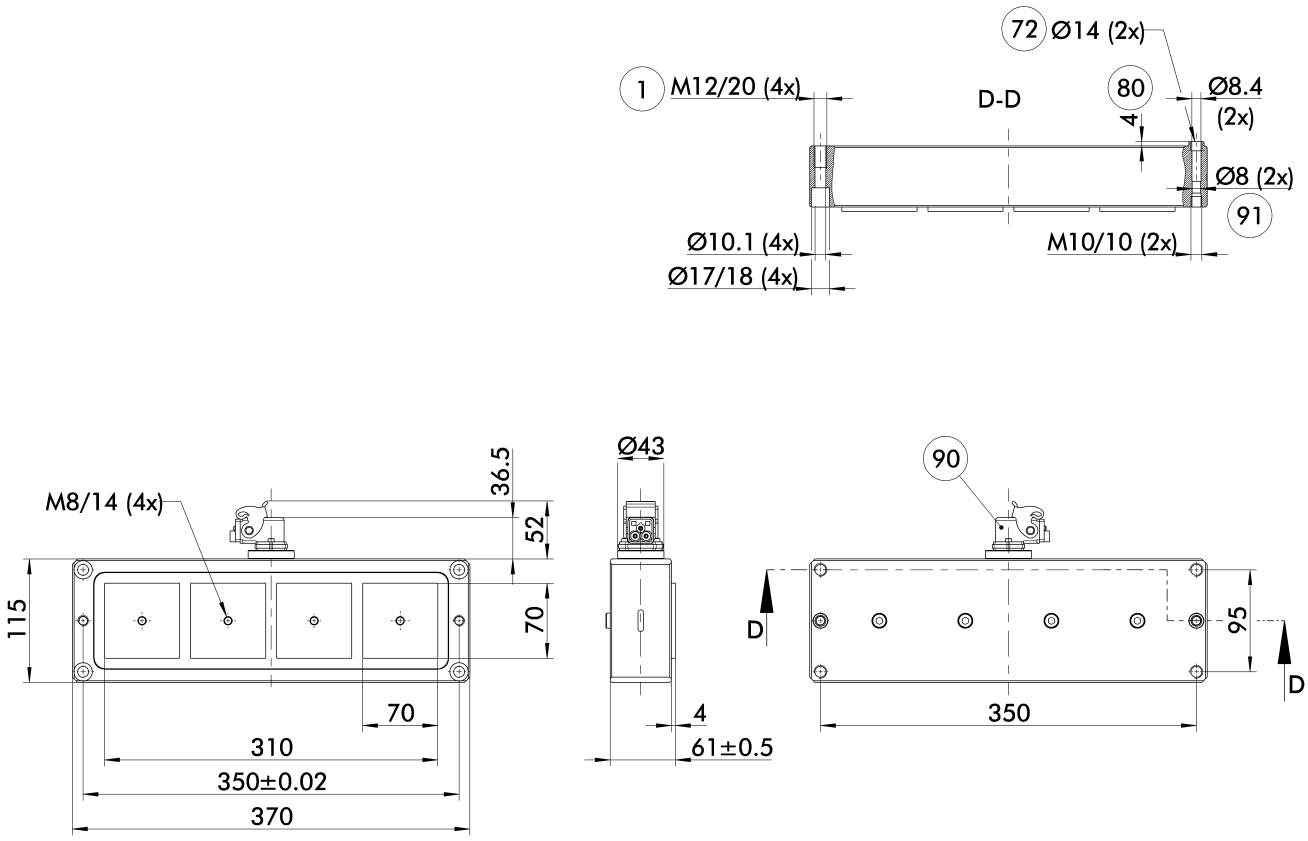

The drawing shows the magnetic gripper in basis configuration, without any additional accessories.

1 Gripper connection
72 Fit for centering sleeves
80 Depth of the centering sleeve hole in the mating part
90 Connector
91 Fitting for pole extension

EGM-B 70Q-2x2 main view

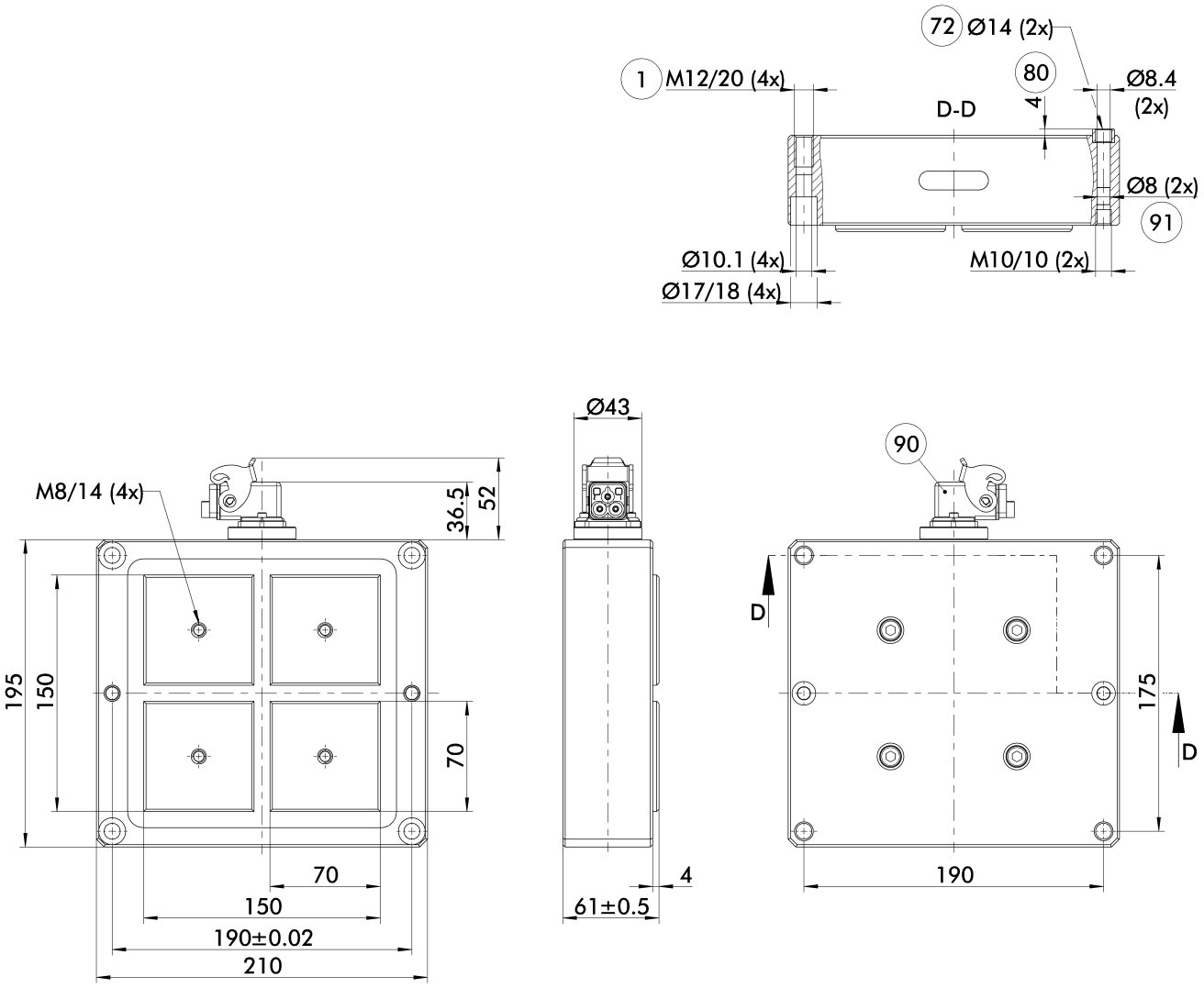

The drawing shows the magnetic gripper in basis configuration, without any additional accessories.

1 Gripper connection
72 Fit for centering sleeves
80 Depth of the centering sleeve hole in the mating part
90 Connector
91 Fitting for pole extension

Pole extension

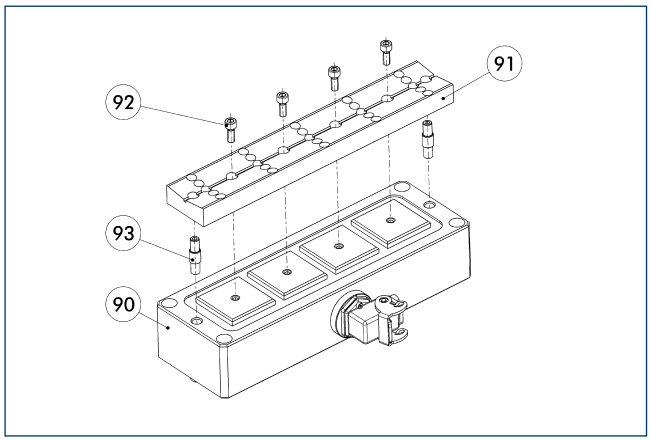

(90) EGM magnetic gripper
(91) Pole extension
(92) Screws
(93) Centering screw

Prismatic pole extensions enable the gripping of round workpieces. The mounting material and centering element are included in the scope of delivery.

Description	ID	
Pole extension		
PVL B-Q-50-1x2	0306383	
PVL B-Q-50-1x4	0306384	
PVL B-Q-70-1x2	0306387	
PVL B-Q-70-1x4	0306388	

Connection cables

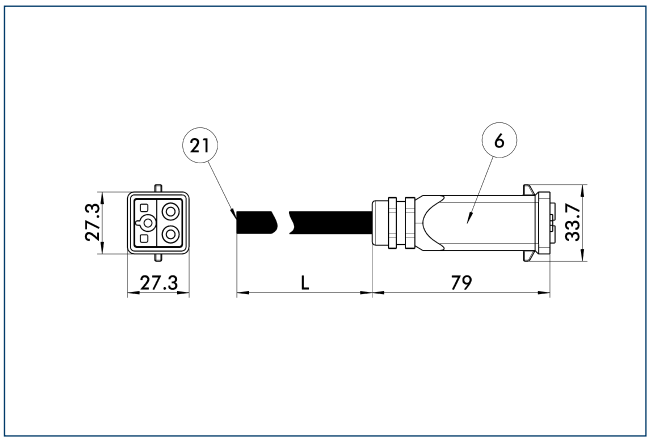

(6) Connection module side
(21) Connection controller side

Please observe the bending radius (7.5 times the cable diameter).

Description	ID	L_2 [m]
Connection cable EGM		
KA GLNQS03-LK-00500-J	0306302	5
KA GLNQS03-LK-01000-J	0306303	10
KA GLNQS03-LK-01500-J	0306304	15
KA GLNQS03-LK-02000-J	0306305	20

ECG-C magnetic controller

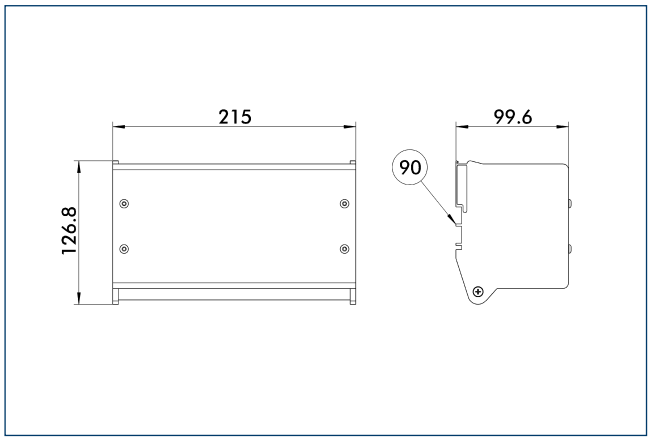

(90) Mounting on DIN rail

For actuating the EGM a control unit ECG is needed. Version "C" allows digital switching of an EGM

Description	ID	
Controller		
ECG-C 01	0306300	
ECG-C 02	0306301	

ⓘ One ECG can control multiple magnets at one time. For independent actuation of several magnets, several control units are needed.

ECG-R magnetic controller

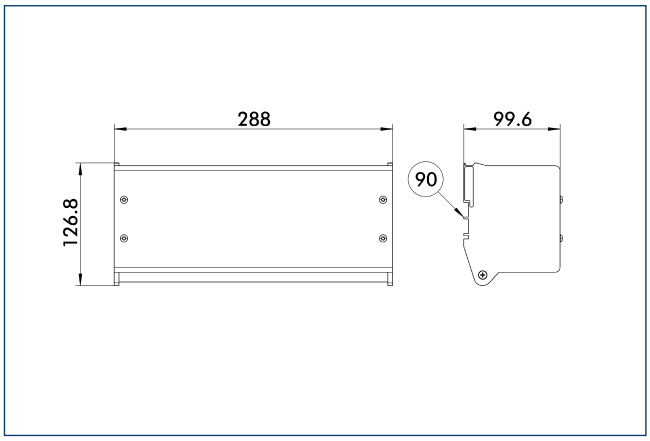

(90) Mounting on DIN rail

For actuating the EGM a control unit ECG is needed. Version "R" allows the setting of eight different force levels.

Description	ID	
Controller		
ECG-R 01	0306390	
ECG-R 02	0306391	

ⓘ One ECG can control multiple magnets at one time. For independent actuation of several magnets, several control units are needed.

ECG-W magnetic controller

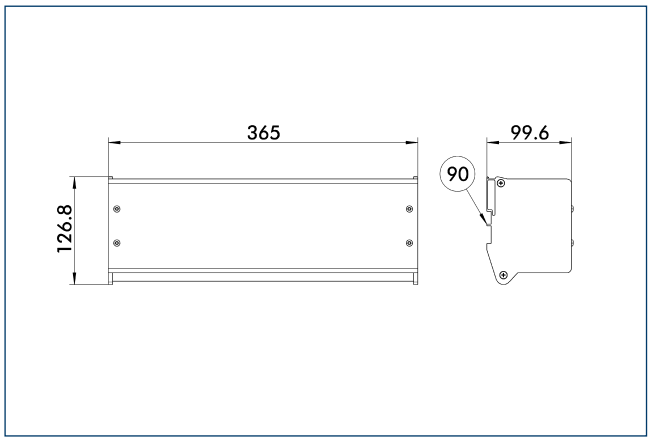

(90) Mounting on DIN rail

For actuating the EGM a control unit ECG is needed. Version "W" allows the digital switching of an EGM, while it is holding of a workpiece during a welding process.

Description	ID	
Controller		
ECG-W 01	0306395	
ECG-W 02	0306396	

ⓘ One ECG can control multiple magnets at one time. For independent actuation of several magnets, several control units are needed.

2-way distributor box

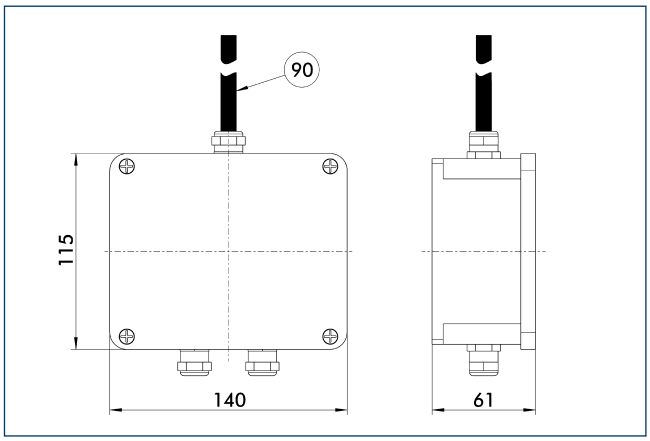

(90) Cable length 10 m, open wires

Several EGM can be connected to one distributor box. This makes the wiring of the EGM with ECG controllers easier.

Description	ID	
2-way distributor box		
EGM-JB 2	0306432	

4-way distributor box

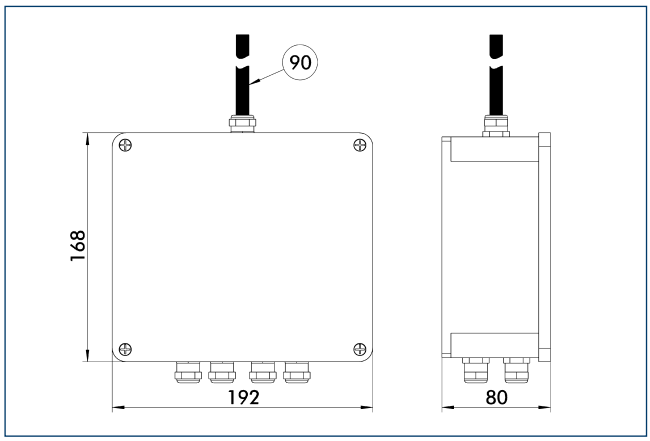

(90) Cable length 10 m, open wires

Several EGM can be connected to one distributor box. This makes the wiring of the EGM with ECG controllers easier.

Description	ID	
4-way distributor box		
EGM-JB 4	0306434	

8-way distributor box

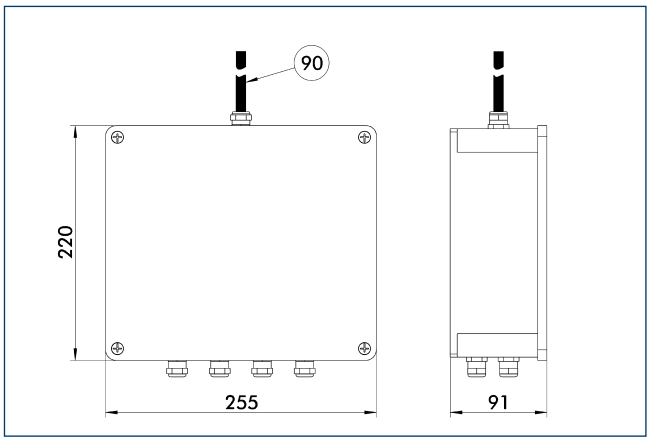

(90) Cable length 10 m, open wires

Several EGM can be connected to one distributor box. This makes the wiring of the EGM with ECG controllers easier.

Description	ID	
8-way distributor box		
EGM-JB 8	0306438	

EGM B-L

SCHUNK Grippers electric | Magnetic Grippers | Magnetic Gripper

Technical data

Description		EGM-B L-30-1x2	EGM-B-L-30-1x4
ID		0306373	0306374
Weight	[kg]	6.5	11.5
Number of poles		2	4
Magnet area	[cm²]	72	72
Minimum workpiece thickness	[mm]	8	8
Load for horizontal magnet surface	[kg]	60	110
Load for vertical magnet surface	[kg]	20	40
max. activations/minute	[1/min]	15	20
Module temperature increasement in case of 5/15 activations/minute	[°C]	15/35	12/32
IP class		52	52
Soleonid current	[A]	3.1	6.5
Magnet Controller Data			
Magnet controller type		ECG 02	ECG 02
Supply voltage	[V AC]	400	400
Maximum current	[A]	32	32
max. number of modules per controller		24	13

EGM-B 30L-1x2 main view

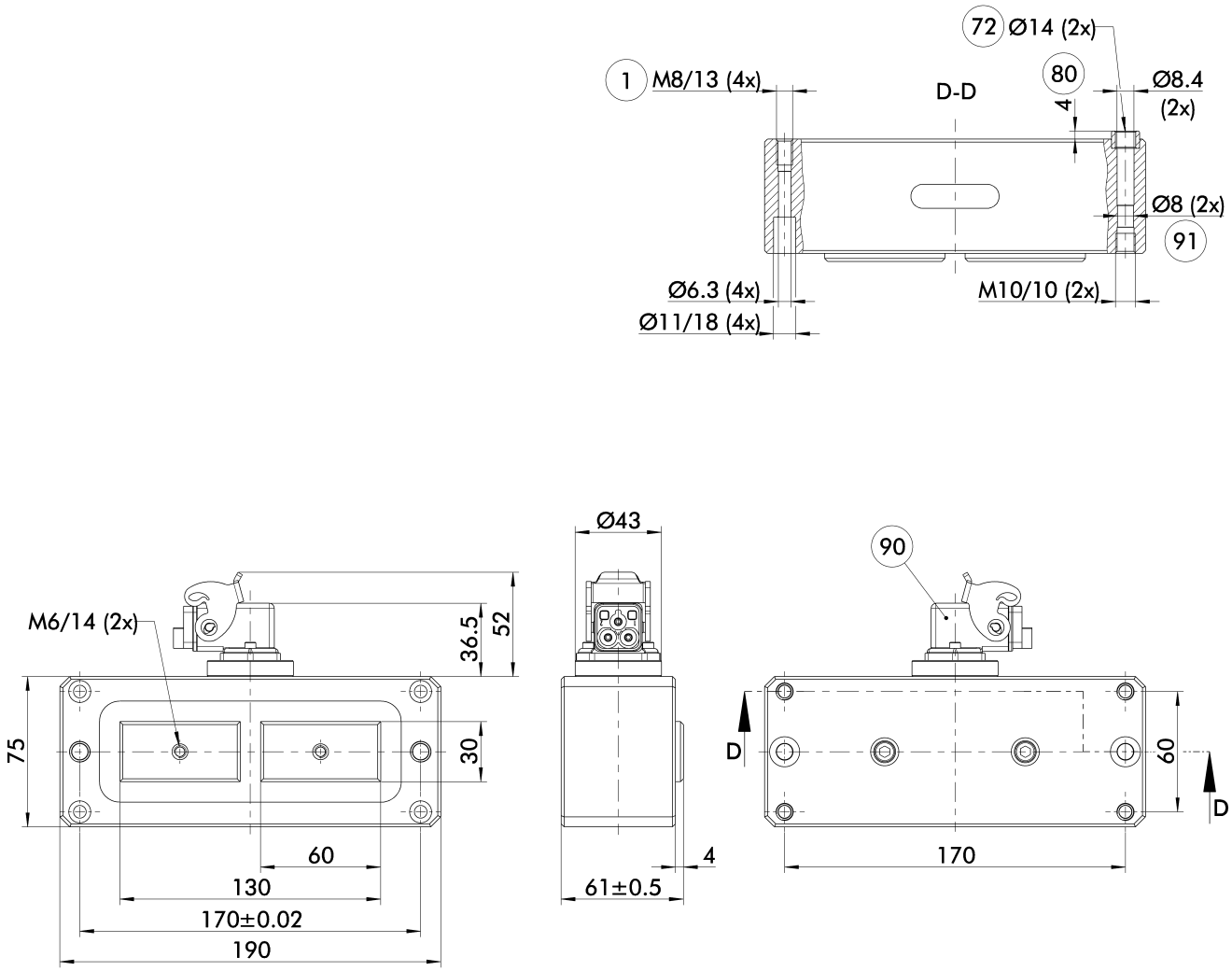

The drawing shows the magnetic gripper in basis configuration, without any additional accessories.

1 Gripper connection
72 Fit for centering sleeves
80 Depth of the centering sleeve hole in the mating part
90 Connector
91 Fitting for pole extension

EGM-B 30L-1x4 main view

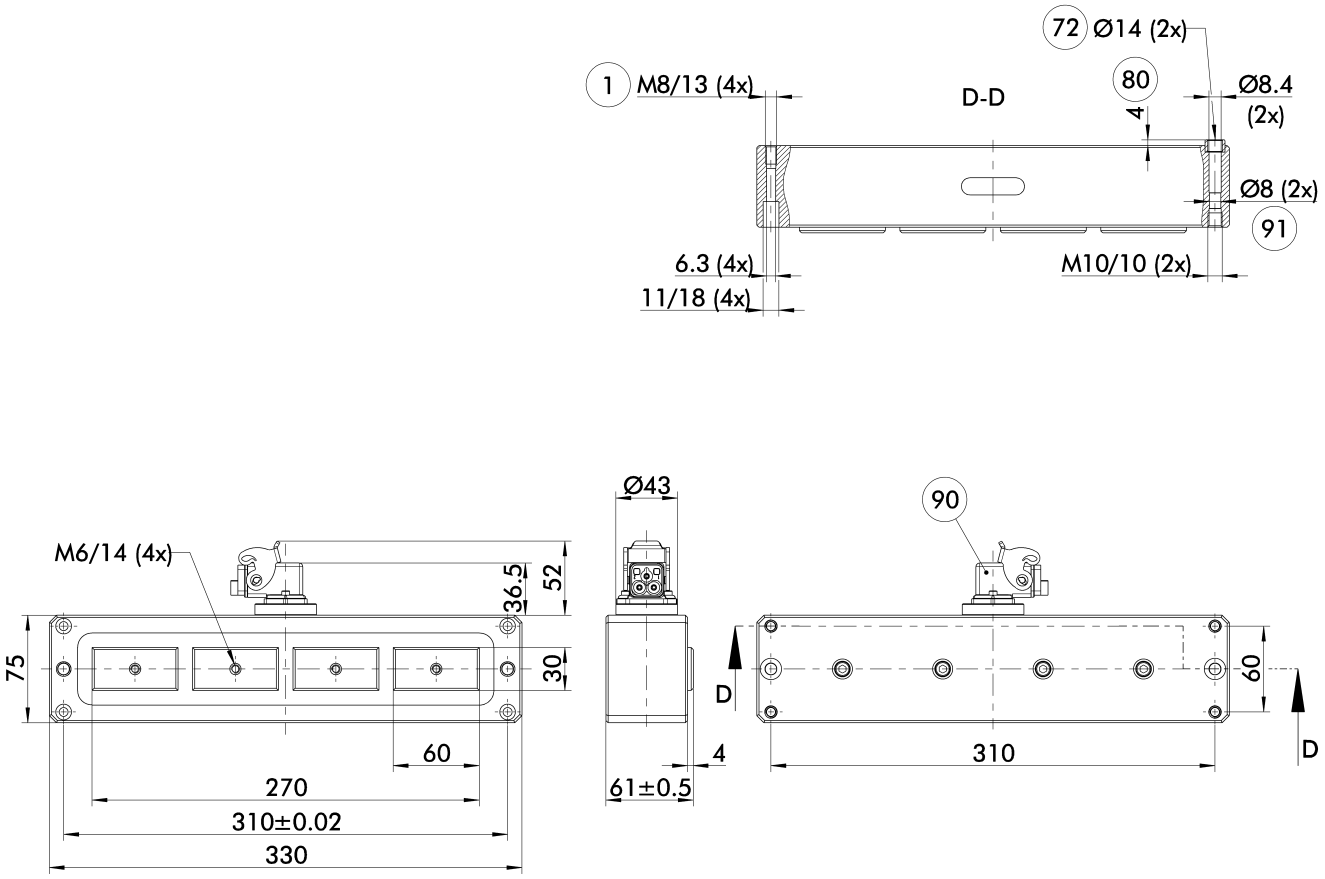

The drawing shows the magnetic gripper in basis configuration, without any additional accessories.

1 Gripper connection
72 Fit for centering sleeves
80 Depth of the centering sleeve hole in the mating part
90 Connector
91 Fitting for pole extension

Pole extension

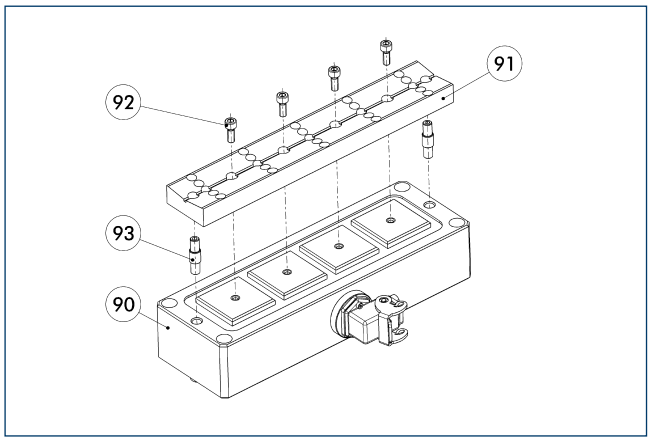

(90) EGM magnetic gripper
(91) Pole extension
(92) Screws
(93) Centering screw

Prismatic pole extensions enable the gripping of round workpieces. The mounting material and centering element are included in the scope of delivery.

Description	ID	
Pole extension		
PVL B-L-30-1x4	0306386	
PVL B-L-30-1x2	0306385	

Connection cables

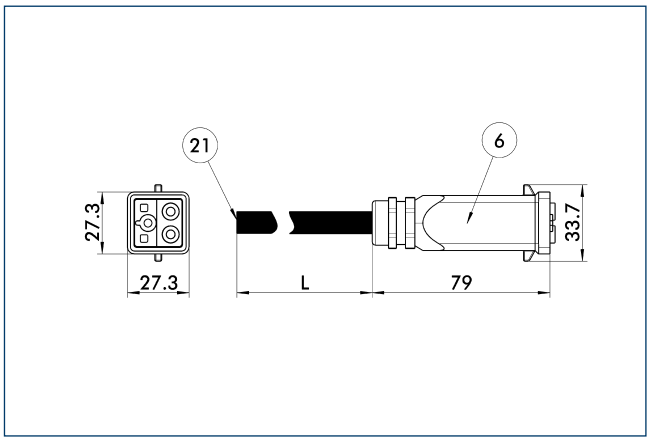

(6) Connection module side
(21) Connection controller side

Please observe the bending radius (7.5 times the cable diameter).

Description	ID	L_2 [m]
Connection cable EGM		
KA GLNQS03-LK-00500-J	0306302	5
KA GLNQS03-LK-01000-J	0306303	10
KA GLNQS03-LK-01500-J	0306304	15
KA GLNQS03-LK-02000-J	0306305	20

ECG-C magnetic controller

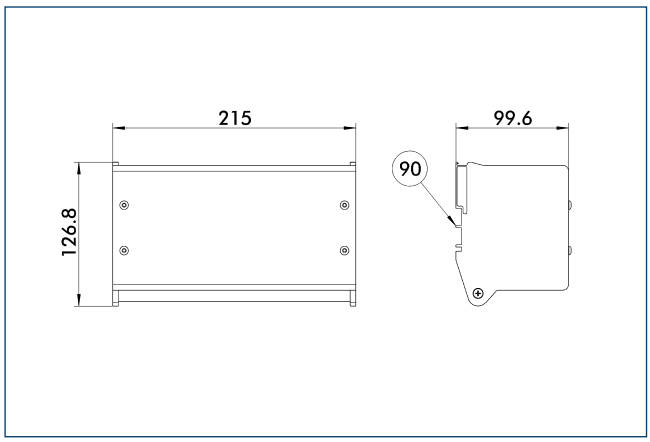

(90) Mounting on DIN rail

For actuating the EGM a control unit ECG is needed. Version "C" allows digital switching of an EGM

Description	ID	
Controller		
ECG-C 01	0306300	
ECG-C 02	0306301	

ⓘ One ECG can control multiple magnets at one time. For independent actuation of several magnets, several control units are needed.

ECG-R magnetic controller

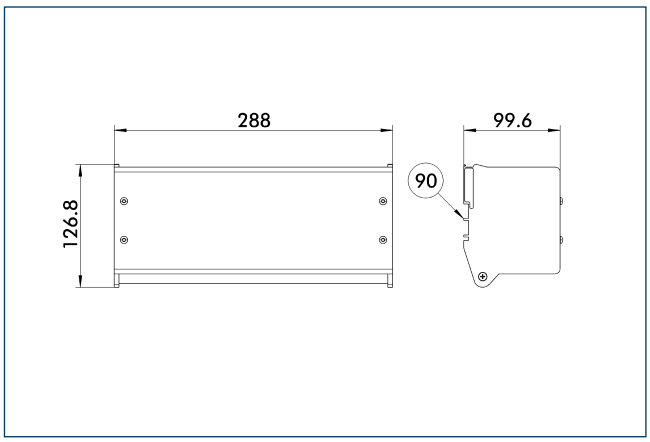

(90) Mounting on DIN rail

For actuating the EGM a control unit ECG is needed. Version "R" allows the setting of eight different force levels.

Description	ID	
Controller		
ECG-R 01	0306390	
ECG-R 02	0306391	

ⓘ One ECG can control multiple magnets at one time. For independent actuation of several magnets, several control units are needed.

ECG-W magnetic controller

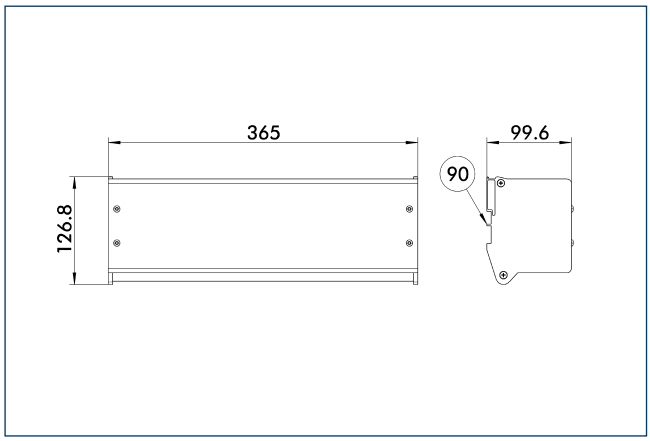

90 Mounting on DIN rail

For actuating the EGM a control unit ECG is needed. Version "W" allows the digital switching of an EGM, while it is holding of a workpiece during a welding process.

Description	ID	
Controller		
ECG-W 01	0306395	
ECG-W 02	0306396	

ⓘ One ECG can control multiple magnets at one time. For independent actuation of several magnets, several control units are needed.

2-way distributor box

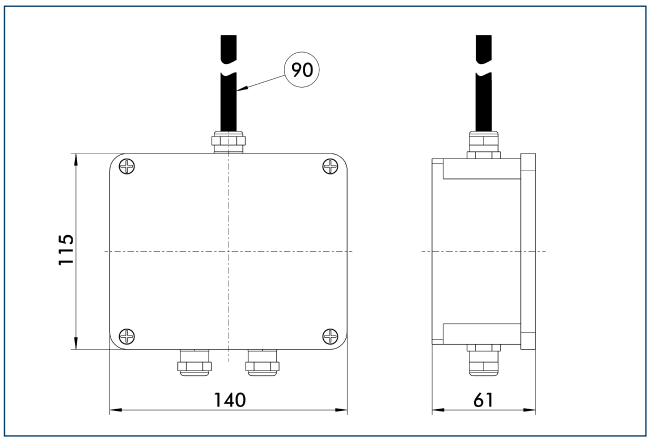

90 Cable length 10 m, open wires

Several EGM can be connected to one distributor box. This makes the wiring of the EGM with ECG controllers easier.

Description	ID	
2-way distributor box		
EGM-JB 2	0306432	

4-way distributor box

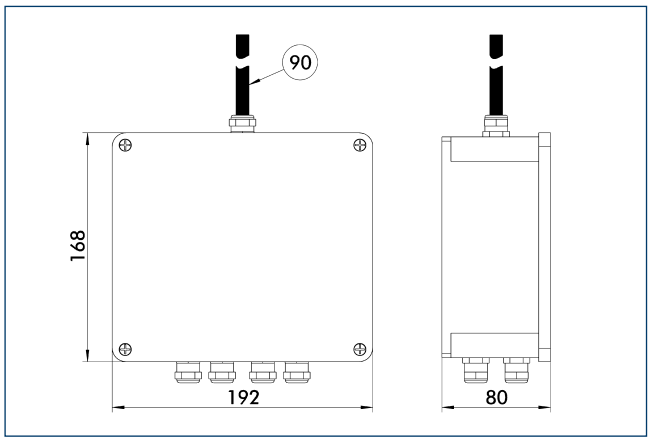

90 Cable length 10 m, open wires

Several EGM can be connected to one distributor box. This makes the wiring of the EGM with ECG controllers easier.

Description	ID	
4-way distributor box		
EGM-JB 4	0306434	

8-way distributor box

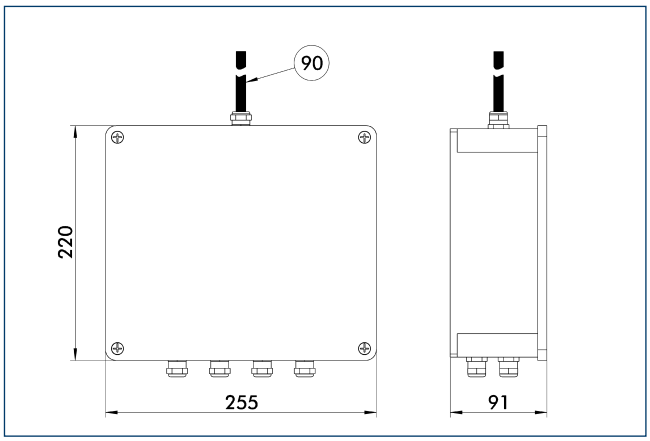

90 Cable length 10 m, open wires

Several EGM can be connected to one distributor box. This makes the wiring of the EGM with ECG controllers easier.

Description	ID	
8-way distributor box		
EGM-JB 8	0306438	

Combined Gripping and Rotation in narrow Spaces in a single Modul Housing.

Rotary Gripping Modules pneumatic

Rotary Gripping Module with GSM-P Parallel Gripper

Series	Sizes	Page
GSM-P		1588
GSM-P	32	1592
GSM-P	40	1598
GSM-P	50	1604
GSM-P	64	1610

Flexible. Energy-efficient. Compact.

GSM-P Rotary Gripping Module

Compact rotary gripping combination, consisting of a powerful rotor drive, an end-position and damping device and a 2-finger parallel gripper

Field of Application

Gripping and swiveling combined in a single compact module, for automated assembly in places with a restricted amount of available space.

Advantages – Your benefit

Space-saving as the rotary drive, end-position damping unit and gripper are merged in one compact module

Economical since adapter plates are not needed, there will be costs for project planning and engineering design

Powerful due to optional hydraulic damping

Flexible through several mounting options, infinitely adjustable swiveling angle and numerous product versions

Cross roller guidance for precise gripping through base jaw guidance with minimum play

Reliable production as moving cables and hoses are replaced by integrated feed-throughs

Mounting on three gripper sides in five screwing directions for universal and flexible assembly of the rotary gripping module

Air supply via hose-free direct connection or screw connections for the specific adaption of the rotary gripping module in all automation solutions

Comprehensive accessories through the use of existing gripper components

Sizes	Weight	Gripping force	Stroke per jaw	Torque
Quantity: 4	0.37 .. 1.51 kg	39 .. 162 N	4 .. 10 mm	0.3 .. 2.9 Nm

Functional Description

The swivel drive rotates the integrated gripper by apply pressure from a rotor. This drive is driven by its own piston. The piston movement is then deflected in a synchronous gripping motion.

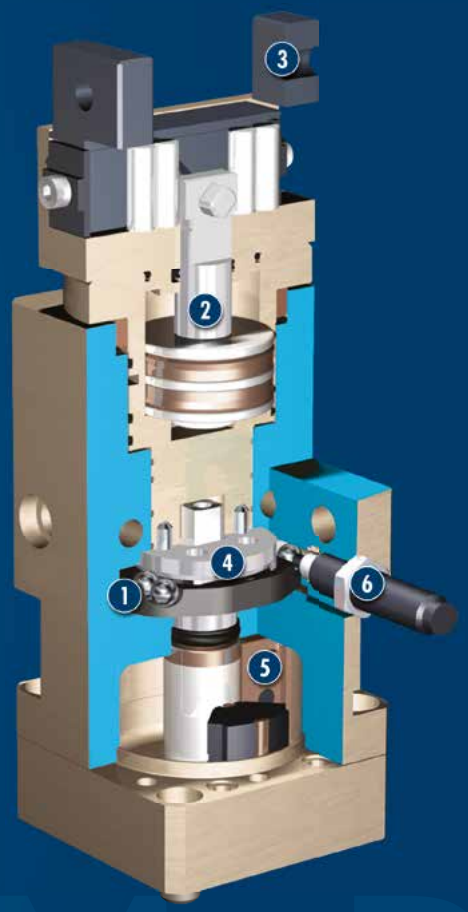

① **Preset of rotating angle**
using steel balls for any desired angle of rotation

② **Gripper drive**
Double-acting piston drive system with diagonal pull

③ **Base jaw**
for the connection of workpiece-specific gripper fingers

④ **End-position damping assembly**
for end-position adjustment and damping

⑤ **Rotor**
as a compact, powerful drive

⑥ **Hydraulic shock absorber**
to increase the damping performance

CAD data, operating manuals and other current product documents are available at **www.schunk.com**

General Notes about the Series

Operating principle: Combined rotor and piston drive

Housing material: Aluminum alloy, anodized

Base jaw material: Steel

Actuation: pneumatic, with filtered compressed air as per DIN ISO 8573-1: 7 4 4

Warranty: 24 months (details, general terms and conditions and operating manuals can be downloaded at www.schunk.com)

Scope of delivery: Centering sleeves, O-rings for direct connection, screws for lateral fastening, steel balls for adjustment of the swiveling angle, assembly and operating manual with declaration of incorporation

Gripping force maintenance device: possible with SDV-P pressure maintenance valve

Gripping force: is the arithmetic total of the gripping force applied to each gripper jaw at distance P (see illustration).

Finger length: is measured from the upper edge of the gripper housing in the direction of the main axis. The breach of the max. permitted finger length can bring higher abrasion.

Workpiece weight: is calculated for a force-fit connection with a coefficient of friction of 0.1 and a safety factor of 2 against slippage of the workpiece on acceleration due to gravity g. Considerably heavier workpiece weights are permitted with form-fit gripping.

Repeat accuracy: is defined as the spread of the limit position after 100 consecutive strokes.

Closing and opening times, cycle times: are purely the times that the base jaws or fingers are in motion. Cycle times are purely the times that the rotating part (mostly the pinion) is in motion. Valve switching times, hose filling times or PLC reaction times are not included in the above times and must be taken into consideration when determining cycle times.

Middle attached load: should constitute a typical load. It is defined as the half of the max. possible mass moment of inertia that can be swiveled without restriction, bouncing or hitting, with a centric load and a vertical rotating axis.

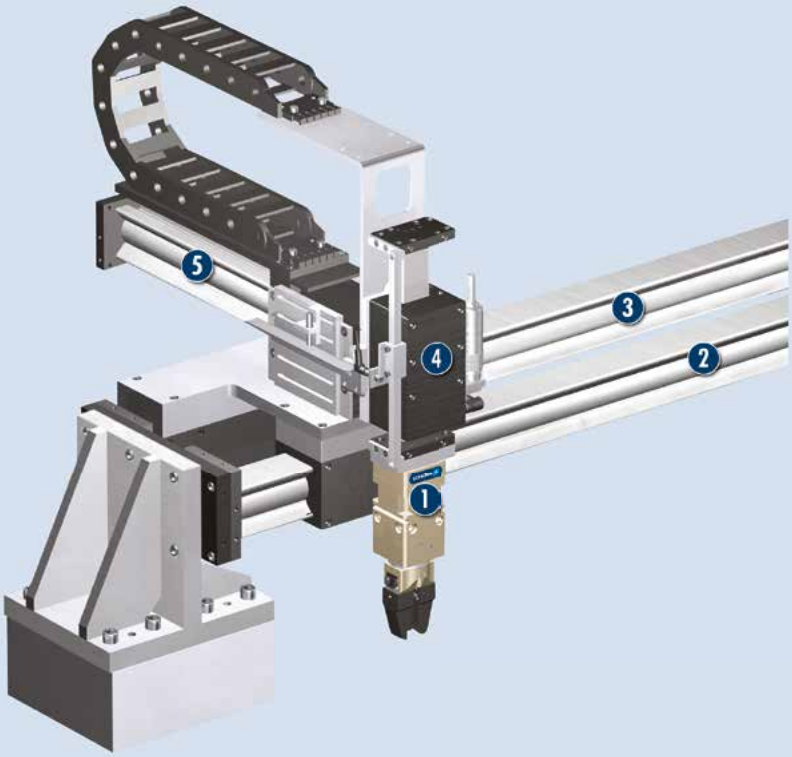

Application example

The three-axis boom (X-Y-Z) with rotary gripping combination is employed to insert various products individually in outer packaging whilst rotating them if necessary.

1. GSM-P Rotary Gripping Module
2. MLD Linear Motor Drive
3. Support Axis without drive
4. MLD Short-stroke Axis with direct drive and reference switch
5. MLD Linear Axis with direct drive with measuring system

SCHUNK offers more ...

The following components make the product GSM-P even more productive – the suitable addition for the highest functionality, flexibility, reliability, and controlled production.

Centering Sleeves

Fittings

MMS-P Programmable Magnetic Switch

Inductive Proximity Switches

Sensor Distributor

Gripper Pads

Sensor Cables

Plastic Inserts

SCV-P Pressure Maintenance Valve

Finger Blanks

GSM-Z Gripper Swivel Module

GSM-W Gripper Swivel Module

ⓘ Further information regarding the products can be found on the following product pages or at www.schunk.com. Please contact us for further information: SCHUNK technical hotline +49-7133-103-2696

Options and special Information

Despite the many options and versions already available as standard, SCHUNK also designs and produces customized versions on request.
The GSM-P rotary gripping module with parallel travel is also available with GSM-Z centric gripper, GSM-W angular gripper, or GSM-R radial gripper. For more information visit www.schunk.com.

GSM-P 32

Rotary Gripping Modules pneumatic | Rotary Gripping Module with Parallel Gripper

Gripping force, O.D. gripping

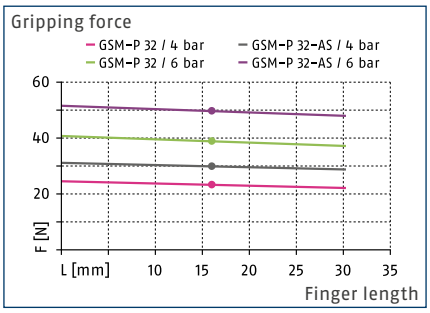

Gripping force, I.D. gripping

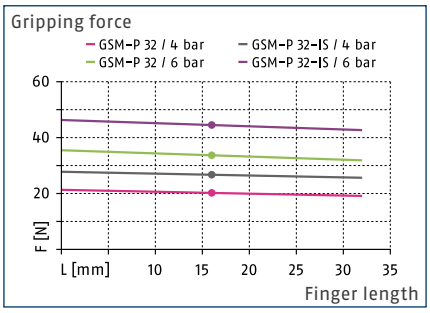

Finger load

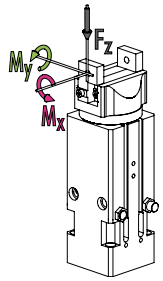

M_x max. 1.50 Nm
M_z max. 3.00 Nm
M_y max. 1.00 Nm
F_z max. 105.00 N

ⓘ The indicated moments and forces are static values, apply per base jaw and may occur simultaneously. M_y may arise in addition to the moment generated by the gripping force itself. If the max. permitted finger weight is exceeded, it is impreative to throttle the air supply so that the jaw movement occurs without any hitting or bouncing. Service life may be reduced.

Technical data

Description		GSM-P 32-E-090	GSM-P 32-E-180	GSM-P 32-AS-E-090	GSM-P 32-AS-E-180	GSM-P 32-IS-E-090	GSM-P 32-IS-E-180
ID		0304630	0303830	0304631	0303831	0304632	0303832
Stroke per jaw	[mm]	4	4	4	4	4	4
Closing- / opening force	[N]	39/33	39/33	51/-	51/-	-/48	-/48
min. spring force	[N]			12	12	15	15
Torque	[Nm]	0.35	0.35	0.35	0.35	0.35	0.35
Angle of rotation	[°]	90	180	90	180	90	180
End position adjustability	[°]	90	180	90	180	90	180
Dampening for swiveling		Elastomer	Elastomer	Elastomer	Elastomer	Elastomer	Elastomer
Recommended workpiece weight	[kg]	0.2	0.2	0.2	0.2	0.2	0.2
Air consumption for gripping	[cm³]	4	4	4	4	4	4
Air consumption for swiveling	[cm³]	9	15	9	15	9	15
Weight	[kg]	0.37	0.37	0.42	0.42	0.42	0.42
Nominal operating pressure	[bar]	6	6	6	6	6	6
max. operating pressure	[bar]	6.5	6.5	6.5	6.5	6.5	6.5
min. operating pressure for gripping	[bar]	2	2	4	4	4	4
min. operating pressure for swiveling	[bar]	3.5	3.5	3.5	3.5	3.5	3.5
Closing- / opening time	[s]	0.04/0.04	0.04/0.04	0.03/0.04	0.03/0.04	0.04/0.03	0.04/0.03
Swiveling time with middle attached load	[s]	0.12	0.18	0.12	0.18	0.12	0.18
max. permitted finger length	[mm]	32	32	32	32	32	32
max. permitted weight per finger	[kg]	0.04	0.04	0.04	0.04	0.04	0.04
max. mass moment of inertia	[kgmm²]	66	66	65	65	65	65
IP class		30	30	30	30	30	30
min. / max. ambient temperature	[°C]	5/90	5/90	5/90	5/90	5/90	5/90
Repeat accuracy for gripping	[mm]	0.02	0.02	0.02	0.02	0.02	0.02
Repeat accuracy for swiveling	[°]	0.1	0.1	0.1	0.1	0.1	0.1
Options and their characteristics							
Version of shock absorber		GSM-P 32-S-090	GSM-P 32-S-180	GSM-P 32-AS-S-090	GSM-P 32-AS-S-180	GSM-P 32-IS-S-090	GSM-P 32-IS-S-180
ID		0304730	0303930	0304731	0303931	0304732	0303932
Dampening for swiveling		hydraulic absorber	hydraulic absorber	hydraulic absorber	hydraulic absorber	hydraulic absorber	hydraulic absorber
max. mass moment of inertia	[kgmm²]	141	141	140	140	140	140
min. / max. ambient temperature	[°C]	5/60	5/60	5/60	5/60	5/60	5/60

Main view

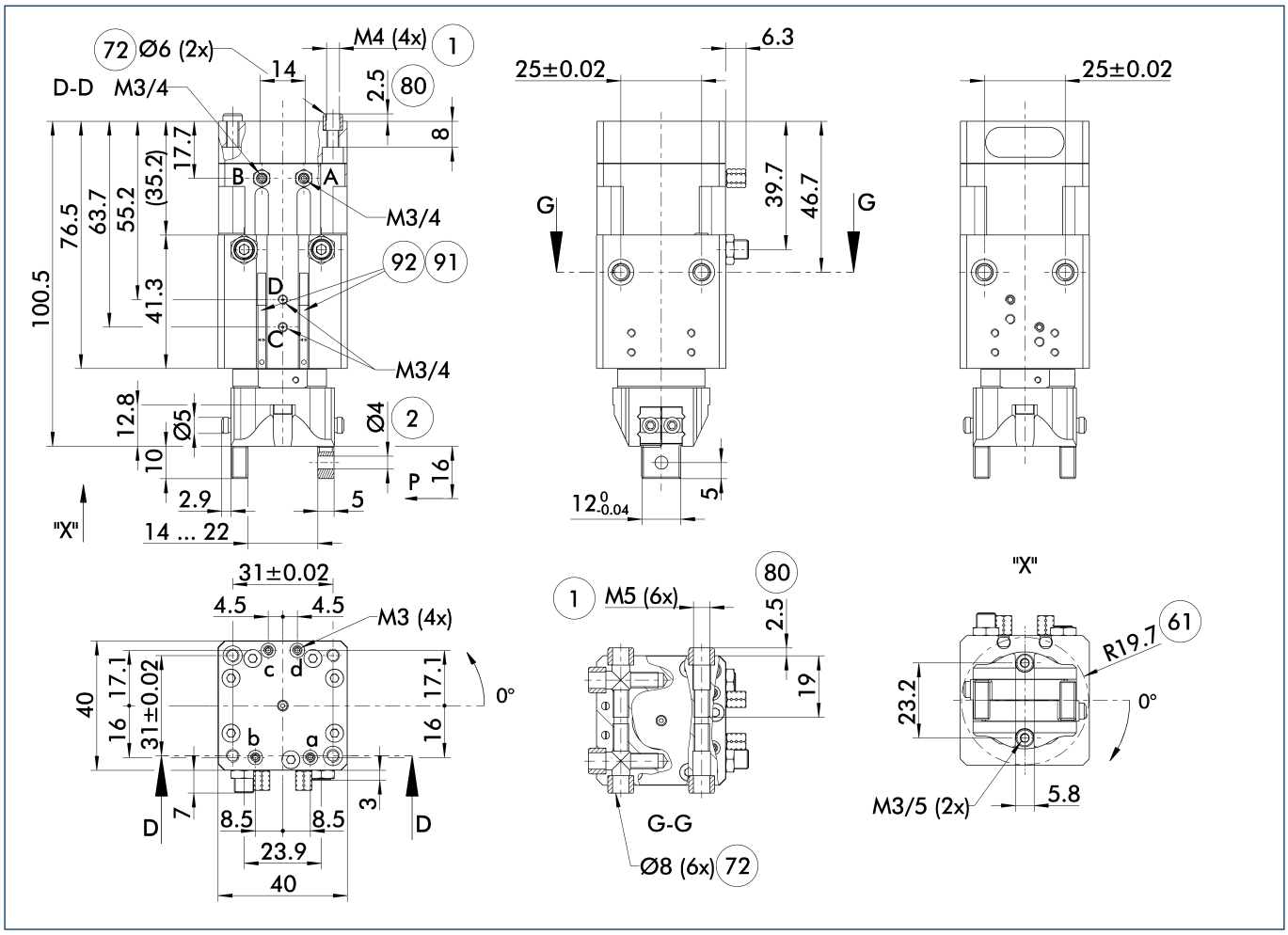

The drawing shows the basic version of the gripper with open jaws, without dimensional consideration of the options described below.

ⓘ The SDV-P pressure maintenance valve can also be used for I.D. or O.D. gripping alternatively or in addition to the spring-loaded, mechanical gripping force maintenance device (see catalog section on "Accessories").

A, a Main / direct connection, rotary actuator rotates clockwise

B, b Main / direct connection, rotary actuator rotates counterclockwise

C, c Main / direct connection, gripper "open"

D, d Main / direct connection, gripper "closed"

1 Rotary actuator connection

2 Attachment connection

61 Interfering contour during swiveling

72 Fit for centering sleeves

80 Depth of the centering sleeve hole in the mating part

91 Monitoring of gripping and swiveling

92 MMS-P22

Monitoring for stacked arrangement

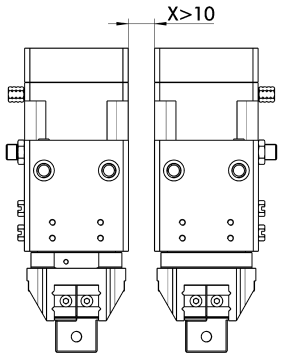

Caution: Monitoring is carried out by magnetic switches, and in case of side-by-side assembly of several units, a minimum distance of X mm between the units must be maintained.

Hose-free direct connection M3

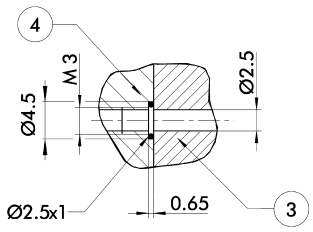

3 Adapter

4 Rotary actuator

The direct connection is used for supplying compressed air without hoses. Instead, the pressure medium is fed through bore-holes in the mounting plate.

Gripping force maintenance device AS / IS

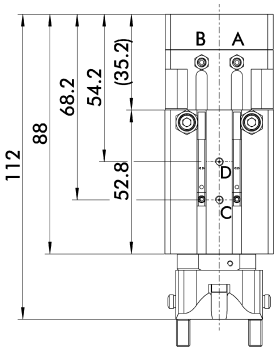

The mechanical maintenance of gripping force also assures a minimum gripping force in the case of a loss of pressure. With the AS / S variant, this acts as a closing force, and as an opening force for the IS variant. The maintenance of gripping force element can also be used as a means for increasing gripping force or for single actuated gripping.

Jaw design

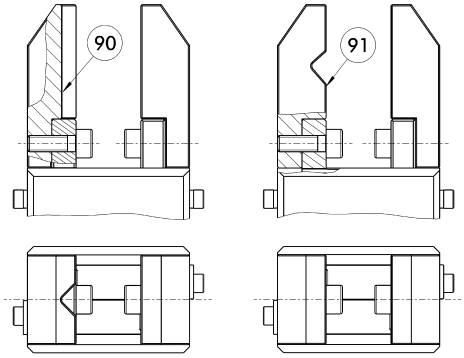

90 Vertical prism

91 Horizontal prism

A three-point support of the gripped workpiece is beneficial for gripping the workpiece with repeat accuracy and process reliability. More than three support points lead to a redundancy of the system. The drawing shows two alternative recommendations for the jaw design for coaxial and radial gripping of a cylindrical part.

Version with shock absorbers

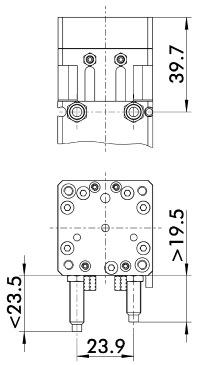

The drawing shows the dimensional changes of the shock absorber versions as compared to the drawing in the main view which shows the elastomer version.

ABR-MPG-plus 32 finger blanks

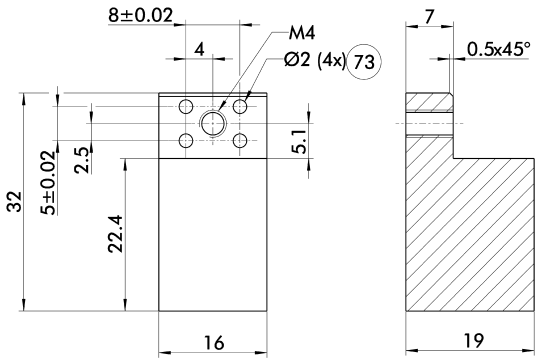

(73) Fit for centering pins

Finger blanks for customized subsequent machining.

Description	ID	Material	Scope of delivery
Finger blanks			
ABR-MPG-plus 32	0340212	Aluminum	2

Mounting kit for proximity switch – 90° / 180° angle of rotation

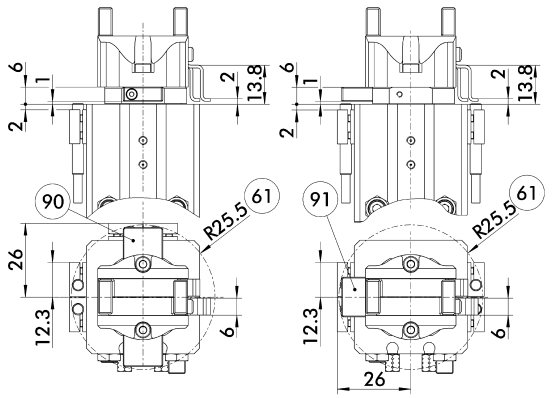

(61) Interfering contour during swiveling

(90) Variant for 90° version

(91) Variant for 180° version

The mounting kit for the 90° and 180° GSM versions is identical, only the mounting is different. The mounting kit consists of two switch cams, two operating cams, four sensor brackets and small components. The proximitiy switches must be ordered separately.

Description	ID	
Mounting kit for proximity switch		
AS-GSM-P 32	0304934	

Inductive proximity switches

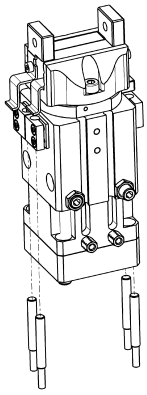

Limit position monitor can be mounted with mounting kit.

Description	ID	Often combined
Mounting kit for proximity switch		
AS-GSM-P 32	0304934	
Inductive proximity switches		
IN 40-S-M12	0301574	
IN 40-S-M8	0301474	●
INK 40-S	0301555	
Cable extensions		
KV BG12-SG12 3P-0030-PNP	0301999	
KV BG12-SG12 3P-0060-PNP	0301998	
KV BW08-SG08 3P-0030-PNP	0301495	
KV BW08-SG08 3P-0100-PNP	0301496	
KV BW08-SG08 3P-0200-PNP	0301497	●
KV BW12-SG12 3P-0030-PNP	0301595	
KV BW12-SG12 3P-0100-PNP	0301596	
KV BW12-SG12 3P-0200-PNP	0301597	
Clip for plug / socket		
CLI-M12	0301464	
CLI-M8	0301463	
Connection cables		
KA BG08-L 3P-0300-PNP	0301622	●
KA BG08-L 3P-0500-PNP	0301623	
KA BG12-L 3P-0500-PNP	30016369	
KA BW08-L 3P-0300-PNP	0301594	
KA BW08-L 3P-0500-PNP	0301502	
KA BW12-L 3P-0300-PNP	0301503	
KA BW12-L 3P-0500-PNP	0301507	
Sensor distributor		
V2-M8	0301775	●
V2-M12	0301776	●
V4-M12	0301747	
V4-M8	0301746	
V8-M12	0301752	
V8-M8	0301751	

ⓘ Two sensors (closer/S) are required for each unit, plus extension cables as an option. This mounting kit needs to be ordered optionally as an accessory. Please note the minimum permitted bending radii for the sensor cables, which are generally 35 mm.

MMS-P programmable magnetic switches

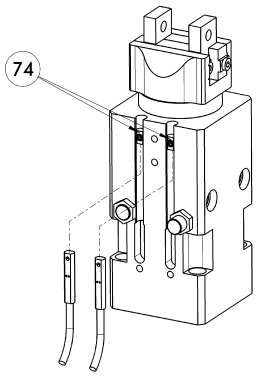

(74) Stop for MMS-P

Position monitoring with two programmable positions per sensor. The end position monitoring is mounted in the C-slot.

Description	ID	Often combined
MMS-P programmable magnetic switches		
MMSK-P 22-S-PNP	0301371	
MMS-P 22-S-M8-PNP	0301370	●
Clip for plug / socket		
CLI-M8	0301463	
Connection cables		
KA BG08-L 4P-0500	0307767	●
KA BG08-L 4P-1000	0307768	
KA BW08-L 4P-0500	0307765	
KA BW08-L 4P-1000	0307766	
Sensor distributor		
V2-M8-4P-2XM8-3P	0301380	

ⓘ Per each GSM two sensors MMS-P are required. If standard extension cables (M8-3P) are used, the sensor distributor can be applied.

GSM-P 40

Rotary Gripping Modules pneumatic | Rotary Gripping Module with Parallel Gripper

Gripping force, O.D. gripping

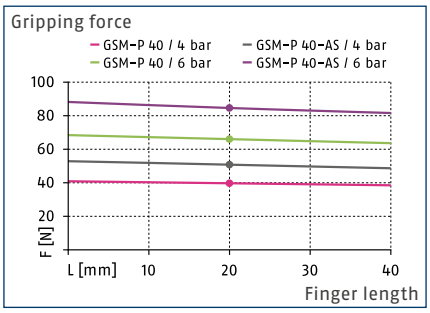

Gripping force, I.D. gripping

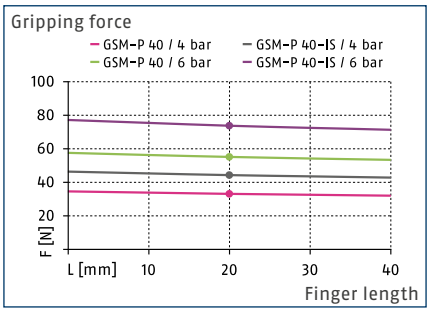

Finger load

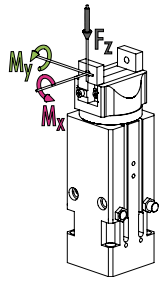

M_x max. 1.50 Nm
M_z max. 4.00 Nm
M_y max. 2.00 Nm
F_z max. 170.00 N

ⓘ The indicated moments and forces are static values, apply per base jaw and may occur simultaneously. M_y may arise in addition to the moment generated by the gripping force itself. If the max. permitted finger weight is exceeded, it is impreative to throttle the air supply so that the jaw movement occurs without any hitting or bouncing. Service life may be reduced.

Technical data

Description		GSM-P 40-E-090	GSM-P 40-E-180	GSM-P 40-AS-E-090	GSM-P 40-AS-E-180	GSM-P 40-IS-E-090	GSM-P 40-IS-E-180
ID		0304640	0303840	0304641	0303841	0304642	0303842
Stroke per jaw	[mm]	6	6	6	6	6	6
Closing- / opening force	[N]	66/54	66/54	87/-	87/-	-/69	-/69
min. spring force	[N]			21	21	15	15
Torque	[Nm]	0.3	0.3	0.3	0.3	0.3	0.3
Angle of rotation	[°]	90	180	90	180	90	180
End position adjustability	[°]	90	180	90	180	90	180
Dampening for swiveling		Elastomer	Elastomer	Elastomer	Elastomer	Elastomer	Elastomer
Recommended workpiece weight	[kg]	0.33	0.33	0.33	0.33	0.33	0.33
Air consumption for gripping	[cm³]	5.97	5.97	5.97	5.97	5.97	5.97
Air consumption for swiveling	[cm³]	9	15	9	15	9	15
Weight	[kg]	0.43	0.43	0.5	0.5	0.5	0.5
Nominal operating pressure	[bar]	6	6	6	6	6	6
max. operating pressure	[bar]	6.5	6.5	6.5	6.5	6.5	6.5
min. operating pressure for gripping	[bar]	2	2	4	4	4	4
min. operating pressure for swiveling	[bar]	4	4	4	4	4	4
Closing- / opening time	[s]	0.05/0.05	0.05/0.05	0.03/0.05	0.03/0.05	0.05/0.03	0.05/0.03
Swiveling time with middle attached load	[s]	0.14	0.22	0.14	0.22	0.14	0.22
max. permitted finger length	[mm]	40	40	40	40	40	40
max. permitted weight per finger	[kg]	0.08	0.08	0.08	0.08	0.08	0.08
max. mass moment of inertia	[kgmm²]	52	52	50	50	50	50
IP class		30	30	30	30	30	30
min. / max. ambient temperature	[°C]	5/90	5/90	5/90	5/90	5/90	5/90
Repeat accuracy for gripping	[mm]	0.02	0.02	0.02	0.02	0.02	0.02
Repeat accuracy for swiveling	[°]	0.1	0.1	0.1	0.1	0.1	0.1
Options and their characteristics							
Version of shock absorber		GSM-P 40-S-090	GSM-P 40-S-180	GSM-P 40-AS-S-090	GSM-P 40-AS-S-180	GSM-P 40-IS-S-090	GSM-P 40-IS-S-180
ID		0304740	0303940	0304741	0303941	0304742	0303942
Dampening for swiveling		hydraulic absorber	hydraulic absorber	hydraulic absorber	hydraulic absorber	hydraulic absorber	hydraulic absorber
max. mass moment of inertia	[kgmm²]	127	127	125	125	125	125
min. / max. ambient temperature	[°C]	5/60	5/60	5/60	5/60	5/60	5/60

Main view

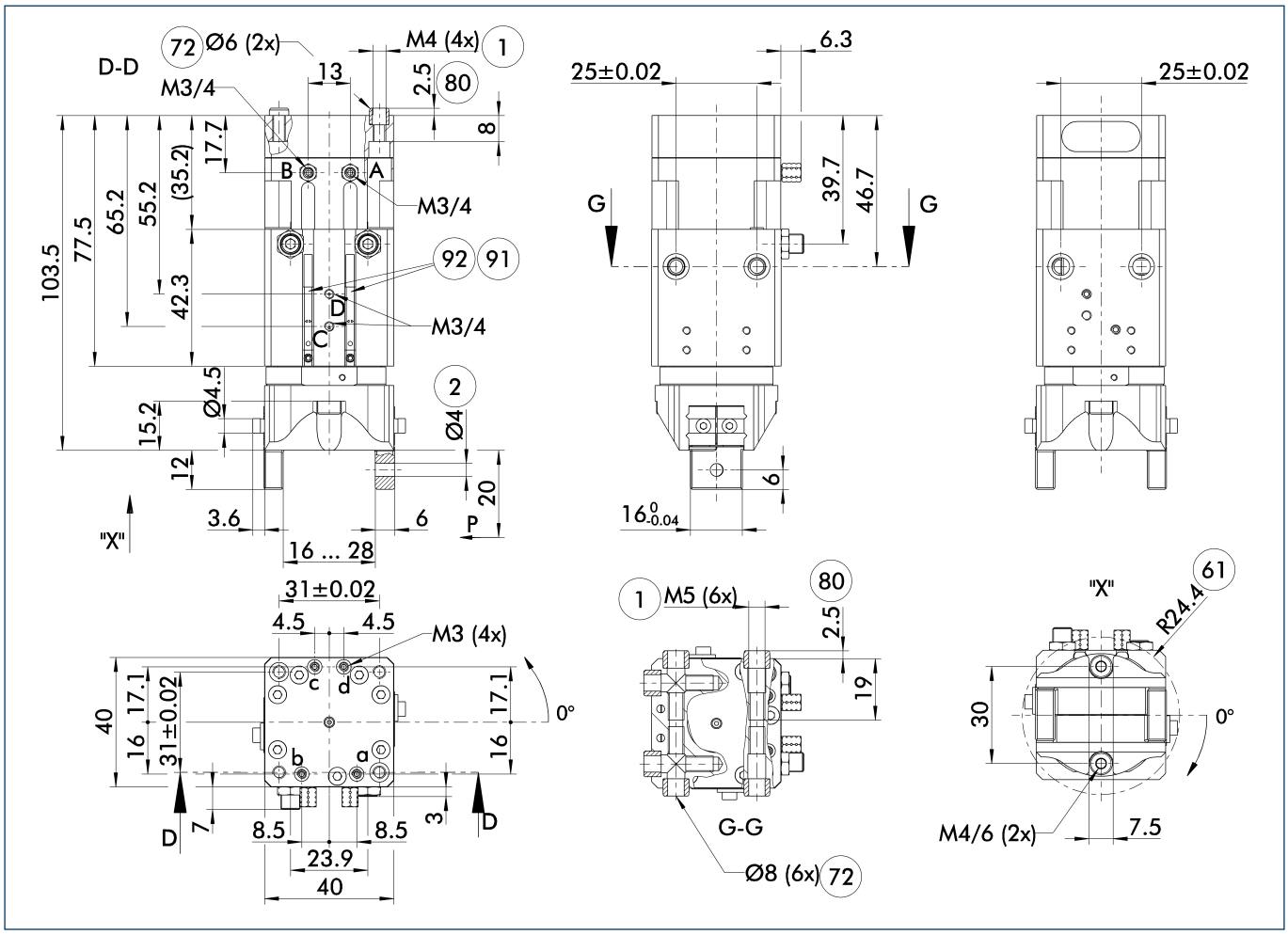

The drawing shows the basic version of the gripper with open jaws, without dimensional consideration of the options described below.

ⓘ The SDV-P pressure maintenance valve can also be used for I.D. or O.D. gripping alternatively or in addition to the spring-loaded, mechanical gripping force maintenance device (see catalog section on "Accessories").

A, a Main / direct connection, rotary actuator rotates clockwise

B, b Main / direct connection, rotary actuator rotates counterclockwise

C, c Main / direct connection, gripper "open"

D, d Main / direct connection, gripper "closed"

(1) Rotary actuator connection

(2) Attachment connection

(61) Interfering contour during swiveling

(72) Fit for centering sleeves

(80) Depth of the centering sleeve hole in the mating part

(91) Monitoring of gripping and swiveling

(92) MMS-P22

Monitoring for stacked arrangement

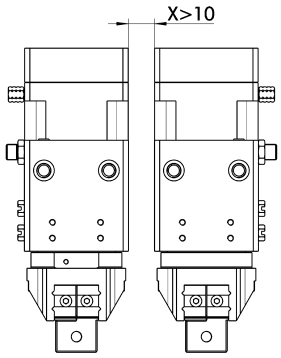

Caution: Monitoring is carried out by magnetic switches, and in case of side-by-side assembly of several units, a minimum distance of X mm between the units must be maintained.

Hose-free direct connection M3

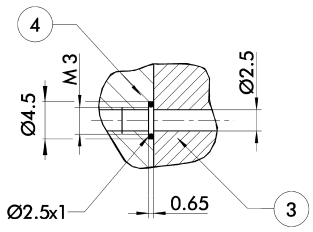

3 Adapter

4 Rotary actuator

The direct connection is used for supplying compressed air without hoses. Instead, the pressure medium is fed through bore-holes in the mounting plate.

Gripping force maintenance device AS / IS

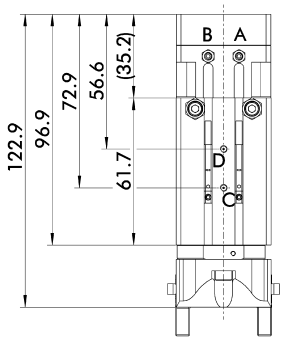

The mechanical maintenance of gripping force also assures a minimum gripping force in the case of a loss of pressure. With the AS / S variant, this acts as a closing force, and as an opening force for the IS variant. The maintenance of gripping force element can also be used as a means for increasing gripping force or for single actuated gripping.

Jaw design

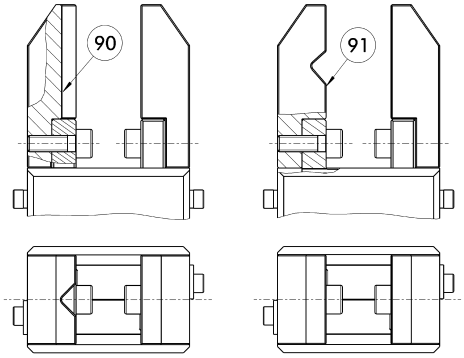

90 Vertical prism

91 Horizontal prism

A three-point support of the gripped workpiece is beneficial for gripping the workpiece with repeat accuracy and process reliability. More than three support points lead to a redundancy of the system. The drawing shows two alternative recommendations for the jaw design for coaxial and radial gripping of a cylindrical part.

Version with shock absorbers

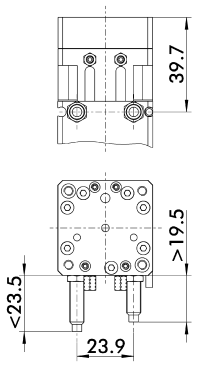

The drawing shows the dimensional changes of the shock absorber versions as compared to the drawing in the main view which shows the elastomer version.

ABR-MPG-plus 40 finger blanks

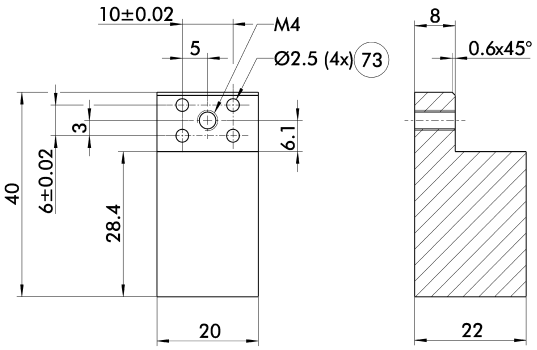

73 Fit for centering pins

Finger blanks for customized subsequent machining.

Description	ID	Material	Scope of delivery
Finger blanks			
ABR-MPG-plus 40	0340213	Aluminum	2

Mounting kit for proximity switch – 90° / 180° angle of rotation

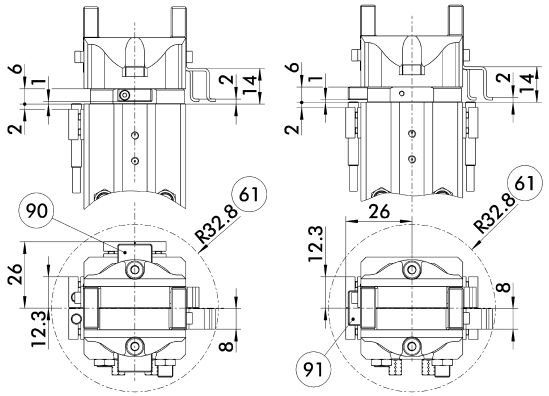

61 Interfering contour during swiveling

90 Variant for 90° version

91 Variant for 180° version

The mounting kit for the 90° and 180° GSM versions is identical, only the mounting is different. The mounting kit consists of two switch cams, two operating cams, four sensor brackets and small components. The proximitiy switches must be ordered separately.

Description	ID	
Mounting kit for proximity switch		
AS-GSM-P 40	0304935	

Inductive proximity switches

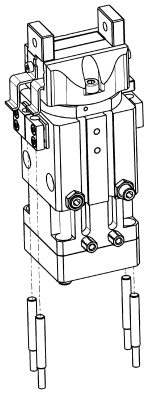

Limit position monitor can be mounted with mounting kit.

Description	ID	Often combined
Mounting kit for proximity switch		
AS-GSM-P 40	0304935	
Inductive proximity switches		
IN 40-S-M12	0301574	
IN 40-S-M8	0301474	●
INK 40-S	0301555	
Cable extensions		
KV BG12-SG12 3P-0030-PNP	0301999	
KV BG12-SG12 3P-0060-PNP	0301998	
KV BW08-SG08 3P-0030-PNP	0301495	
KV BW08-SG08 3P-0100-PNP	0301496	
KV BW08-SG08 3P-0200-PNP	0301497	●
KV BW12-SG12 3P-0030-PNP	0301595	
KV BW12-SG12 3P-0100-PNP	0301596	
KV BW12-SG12 3P-0200-PNP	0301597	
Clip for plug / socket		
CLI-M12	0301464	
CLI-M8	0301463	
Connection cables		
KA BG08-L 3P-0300-PNP	0301622	●
KA BG08-L 3P-0500-PNP	0301623	
KA BG12-L 3P-0500-PNP	30016369	
KA BW08-L 3P-0300-PNP	0301594	
KA BW08-L 3P-0500-PNP	0301502	
KA BW12-L 3P-0300-PNP	0301503	
KA BW12-L 3P-0500-PNP	0301507	
Sensor distributor		
V2-M8	0301775	●
V2-M12	0301776	●
V4-M12	0301747	
V4-M8	0301746	
V8-M12	0301752	
V8-M8	0301751	

ⓘ Two sensors (closer/S) are required for each unit, plus extension cables as an option. This mounting kit needs to be ordered optionally as an accessory. Please note the minimum permitted bending radii for the sensor cables, which are generally 35 mm.

MMS-P programmable magnetic switches

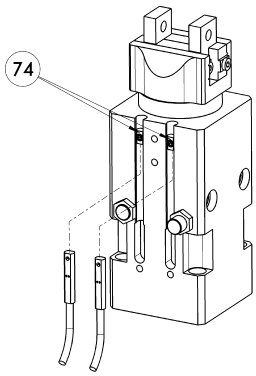

74 Stop for MMS-P

Position monitoring with two programmable positions per sensor. The end position monitoring is mounted in the C-slot.

Description	ID	Often combined
MMS-P programmable magnetic switches		
MMSK-P 22-S-PNP	0301371	
MMS-P 22-S-M8-PNP	0301370	●
Clip for plug / socket		
CLI-M8	0301463	
Connection cables		
KA BG08-L 4P-0500	0307767	●
KA BG08-L 4P-1000	0307768	
KA BW08-L 4P-0500	0307765	
KA BW08-L 4P-1000	0307766	
Sensor distributor		
V2-M8-4P-2XM8-3P	0301380	

ⓘ Per each GSM two sensors MMS-P are required. If standard extension cables (M8-3P) are used, the sensor distributor can be applied.

GSM-P 50

Rotary Gripping Modules pneumatic | Rotary Gripping Module with Parallel Gripper

Gripping force, O.D. gripping

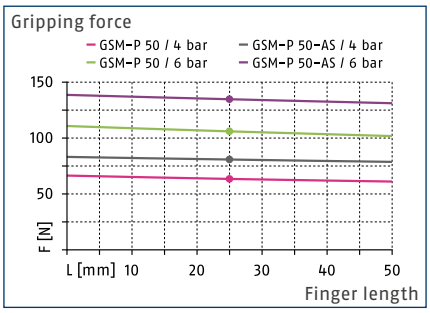

Gripping force, I.D. gripping

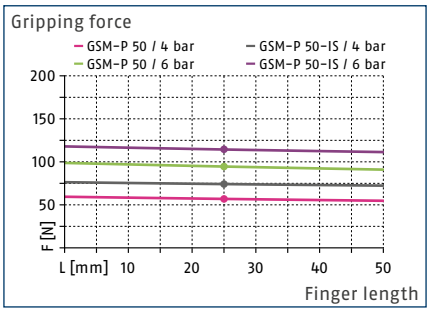

Finger load

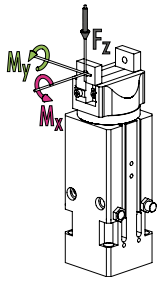

M_x max. 3.00 Nm
M_z max. 5.00 Nm
M_y max. 4.00 Nm
F_z max. 200.00 N

ⓘ The indicated moments and forces are static values, apply per base jaw and may occur simultaneously. M_y may arise in addition to the moment generated by the gripping force itself. If the max. permitted finger weight is exceeded, it is impreative to throttle the air supply so that the jaw movement occurs without any hitting or bouncing. Service life may be reduced.

Technical data

Description		GSM-P 50-E-090	GSM-P 50-E-180	GSM-P 50-AS-E-090	GSM-P 50-AS-E-180	GSM-P 50-IS-E-090	GSM-P 50-IS-E-180
ID		0304650	0303850	0304651	0303851	0304652	0303852
Stroke per jaw	[mm]	8	8	8	8	8	8
Closing- / opening force	[N]	105/93	105/93	135/-	135/-	-/114	-/114
min. spring force	[N]			30	30	21	21
Torque	[Nm]	2.9	2.9	2.9	2.9	2.9	2.9
Angle of rotation	[°]	90	180	90	180	90	180
End position adjustability	[°]	90	180	90	180	90	180
Dampening for swiveling		Elastomer	Elastomer	Elastomer	Elastomer	Elastomer	Elastomer
Recommended workpiece weight	[kg]	0.52	0.52	0.52	0.52	0.52	0.52
Air consumption for gripping	[cm³]	10.84	10.84	10.84	10.84	10.84	10.84
Air consumption for swiveling	[cm³]	51	85	51	85	51	85
Weight	[kg]	1.19	1.19	1.19	1.19	1.2	1.2
Nominal operating pressure	[bar]	6	6	6	6	6	6
max. operating pressure	[bar]	6.5	6.5	6.5	6.5	6.5	6.5
min. operating pressure for gripping	[bar]	2	2	4	4	4	4
min. operating pressure for swiveling	[bar]	3	3	3	3	3	3
Closing- / opening time	[s]	0.01/0.01	0.01/0.01	0.01/0.02	0.01/0.02	0.02/0.01	0.02/0.01
Swiveling time with middle attached load	[s]	0.14	0.24	0.14	0.24	0.14	0.24
max. permitted finger length	[mm]	50	50	50	50	50	50
max. permitted weight per finger	[kg]	0.14	0.14	0.14	0.14	0.14	0.14
max. mass moment of inertia	[kgmm²]	180	180	176	176	176	176
IP class		30	30	30	30	30	30
min. / max. ambient temperature	[°C]	5/90	5/90	5/90	5/90	5/90	5/90
Repeat accuracy for gripping	[mm]	0.02	0.02	0.02	0.02	0.02	0.02
Repeat accuracy for swiveling	[°]	0.1	0.1	0.1	0.1	0.1	0.1
Options and their characteristics							
Version of shock absorber		GSM-P 50-S-090	GSM-P 50-S-180	GSM-P 50-AS-S-090	GSM-P 50-AS-S-180	GSM-P 50-IS-S-090	GSM-P 50-IS-S-180
ID		0304750	0303950	0304751	0303951	0304752	0303952
Dampening for swiveling		hydraulic absorber	hydraulic absorber	hydraulic absorber	hydraulic absorber	hydraulic absorber	hydraulic absorber
max. mass moment of inertia	[kgmm²]	430	430	426	426	426	426
min. / max. ambient temperature	[°C]	5/60	5/60	5/60	5/60	5/60	5/60

Main view

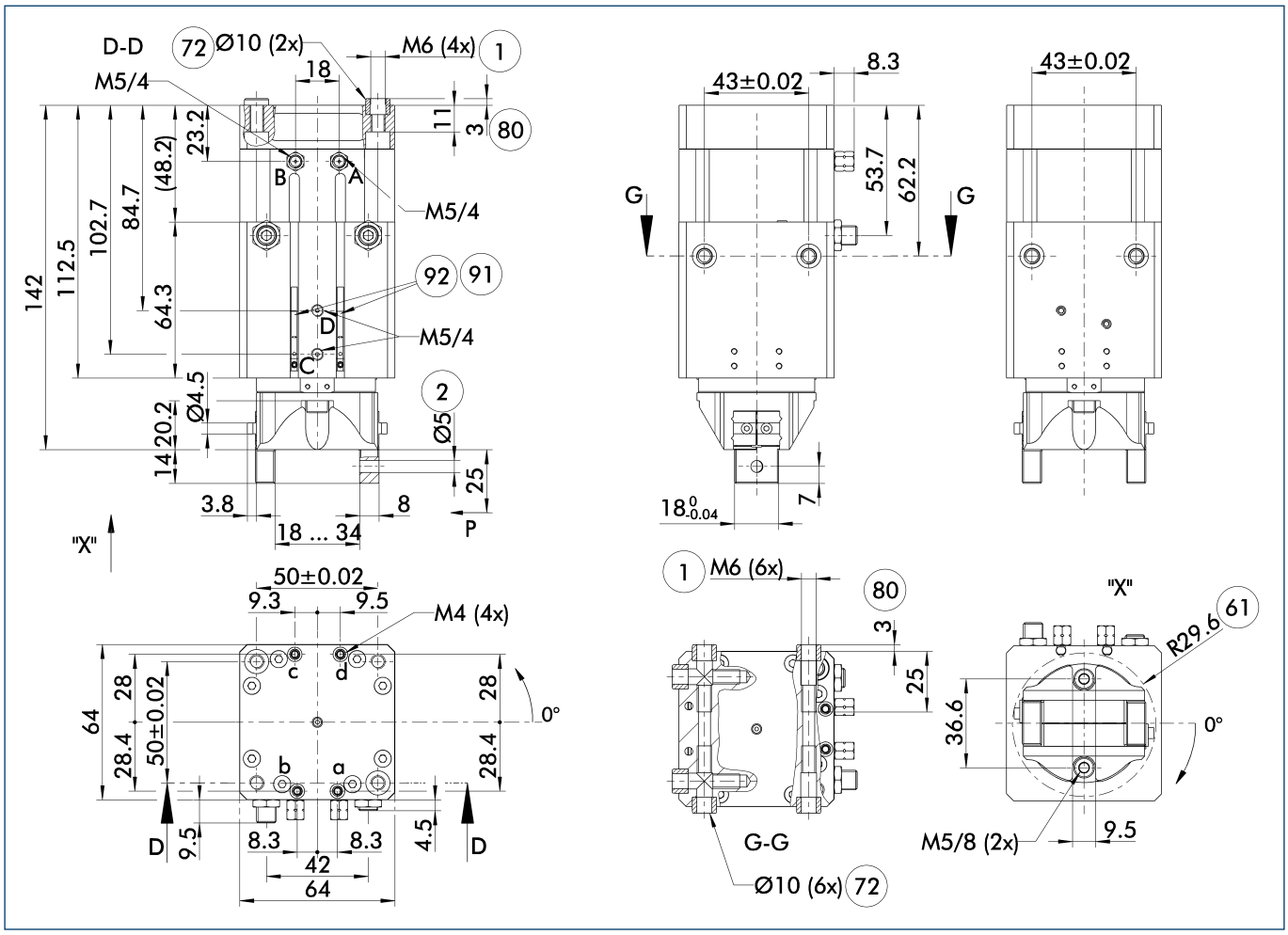

The drawing shows the basic version of the gripper with open jaws, without dimensional consideration of the options described below.

ⓘ The SDV-P pressure maintenance valve can also be used for I.D. or O.D. gripping alternatively or in addition to the spring-loaded, mechanical gripping force maintenance device (see catalog section on "Accessories").

A, a Main / direct connection, rotary actuator rotates clockwise

B, b Main / direct connection, rotary actuator rotates counterclockwise

C, c Main / direct connection, gripper "open"

D, d Main / direct connection, gripper "closed"

(1) Rotary actuator connection

(2) Attachment connection

(61) Interfering contour during swiveling

(72) Fit for centering sleeves

(80) Depth of the centering sleeve hole in the mating part

(91) Monitoring of gripping and swiveling

(92) MMS-P22

Monitoring for stacked arrangement

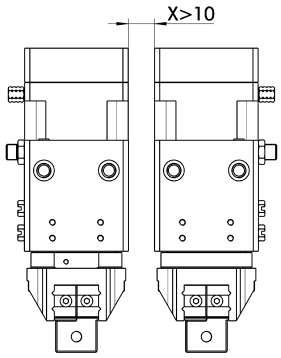

Caution: Monitoring is carried out by magnetic switches, and in case of side-by-side assembly of several units, a minimum distance of X mm between the units must be maintained.

Hose-free direct connection M4

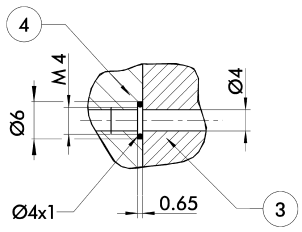

3 Adapter

4 Rotary actuator

The direct connection is used for supplying compressed air without hoses. Instead, the pressure medium is fed through bore-holes in the mounting plate.

Gripping force maintenance device AS / IS

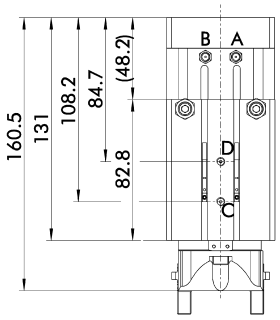

The mechanical maintenance of gripping force also assures a minimum gripping force in the case of a loss of pressure. With the AS / S variant, this acts as a closing force, and as an opening force for the IS variant. The maintenance of gripping force element can also be used as a means for increasing gripping force or for single actuated gripping.

Jaw design

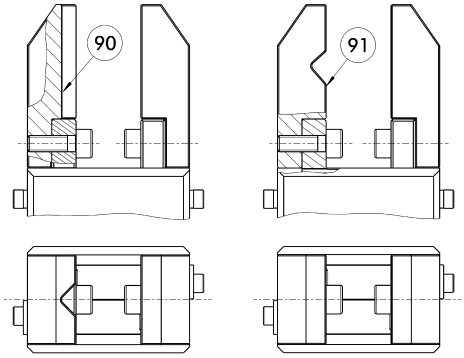

90 Vertical prism

91 Horizontal prism

A three-point support of the gripped workpiece is beneficial for gripping the workpiece with repeat accuracy and process reliability. More than three support points lead to a redundancy of the system. The drawing shows two alternative recommendations for the jaw design for coaxial and radial gripping of a cylindrical part.

Version with shock absorbers

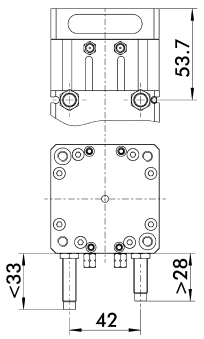

The drawing shows the dimensional changes of the shock absorber versions as compared to the drawing in the main view which shows the elastomer version.

ABR-MPG-plus 50 finger blanks

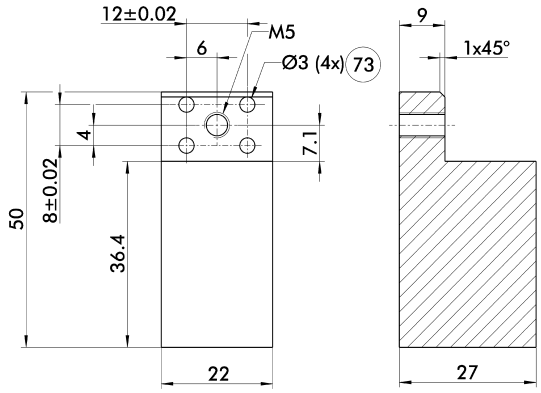

73 Fit for centering pins

Finger blanks for customized subsequent machining.

Description	ID	Material	Scope of delivery
Finger blanks			
ABR-MPG-plus 50	0340214	Aluminum	2

Mounting kit for proximity switch – 90° / 180° angle of rotation

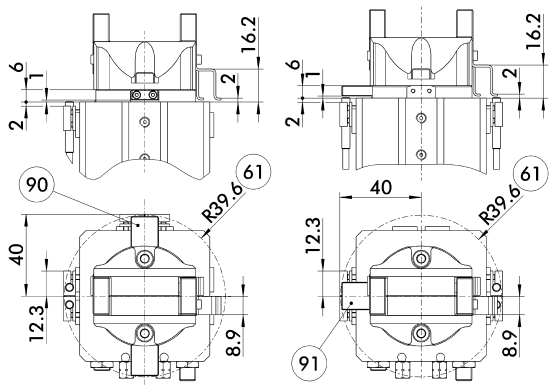

61 Interfering contour during swiveling

90 Variant for 90° version

91 Variant for 180° version

The mounting kit for the 90° and 180° GSM versions is identical, only the mounting is different. The mounting kit consists of two switch cams, two operating cams, four sensor brackets and small components. The proximitiy switches must be ordered separately.

Description	ID	
Mounting kit for proximity switch		
AS-GSM-P 50	0304936	

Inductive proximity switches

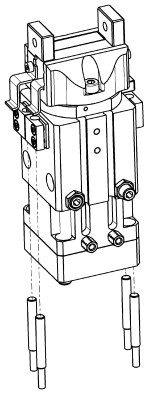

Limit position monitor can be mounted with mounting kit.

Description	ID	Often combined
Mounting kit for proximity switch		
AS-GSM-P 50	0304936	
Inductive proximity switches		
IN 40-S-M12	0301574	
IN 40-S-M8	0301474	●
INK 40-S	0301555	
Cable extensions		
KV BG12-SG12 3P-0030-PNP	0301999	
KV BG12-SG12 3P-0060-PNP	0301998	
KV BW08-SG08 3P-0030-PNP	0301495	
KV BW08-SG08 3P-0100-PNP	0301496	
KV BW08-SG08 3P-0200-PNP	0301497	●
KV BW12-SG12 3P-0030-PNP	0301595	
KV BW12-SG12 3P-0100-PNP	0301596	
KV BW12-SG12 3P-0200-PNP	0301597	
Clip for plug / socket		
CLI-M12	0301464	
CLI-M8	0301463	
Connection cables		
KA BG08-L 3P-0300-PNP	0301622	●
KA BG08-L 3P-0500-PNP	0301623	
KA BG12-L 3P-0500-PNP	30016369	
KA BW08-L 3P-0300-PNP	0301594	
KA BW08-L 3P-0500-PNP	0301502	
KA BW12-L 3P-0300-PNP	0301503	
KA BW12-L 3P-0500-PNP	0301507	
Sensor distributor		
V2-M8	0301775	●
V2-M12	0301776	●
V4-M12	0301747	
V4-M8	0301746	
V8-M12	0301752	
V8-M8	0301751	

ⓘ Two sensors (closer/S) are required for each unit, plus extension cables as an option. This mounting kit needs to be ordered optionally as an accessory. Please note the minimum permitted bending radii for the sensor cables, which are generally 35 mm.

MMS-P programmable magnetic switches

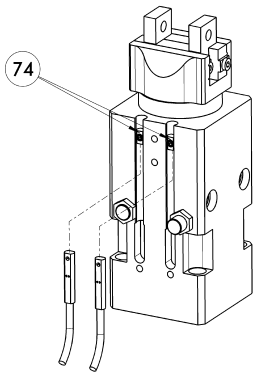

(74) Stop for MMS-P

Position monitoring with two programmable positions per sensor. The end position monitoring is mounted in the C-slot.

Description	ID	Often combined
MMS-P programmable magnetic switches		
MMSK-P 22-S-PNP	0301371	
MMS-P 22-S-M8-PNP	0301370	●
Clip for plug / socket		
CLI-M8	0301463	
Connection cables		
KA BG08-L 4P-0500	0307767	●
KA BG08-L 4P-1000	0307768	
KA BW08-L 4P-0500	0307765	
KA BW08-L 4P-1000	0307766	
Sensor distributor		
V2-M8-4P-2XM8-3P	0301380	

ⓘ Per each GSM two sensors MMS-P are required. If standard extension cables (M8-3P) are used, the sensor distributor can be applied.

GSM-P 64

Rotary Gripping Modules pneumatic | Rotary Gripping Module with Parallel Gripper

Gripping force, O.D. gripping

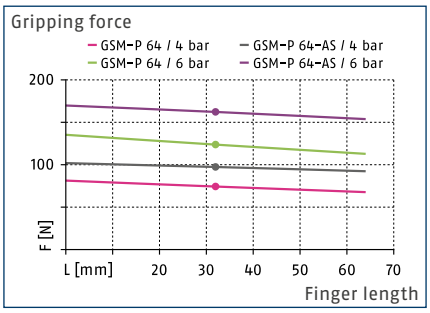

Gripping force, I.D. gripping

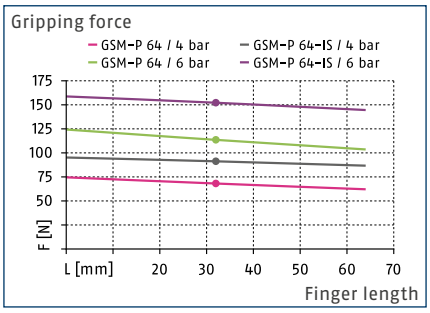

Finger load

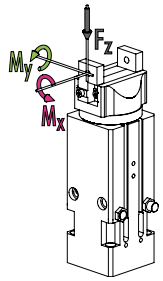

M_x max. 3.50 Nm
M_z max. 9.00 Nm
M_y max. 6.00 Nm
F_z max. 250.00 N

ⓘ The indicated moments and forces are static values, apply per base jaw and may occur simultaneously. M_y may arise in addition to the moment generated by the gripping force itself. If the max. permitted finger weight is exceeded, it is impreative to throttle the air supply so that the jaw movement occurs without any hitting or bouncing. Service life may be reduced.

Technical data

Description		GSM-P 64-E-090	GSM-P 64-E-180	GSM-P 64-AS-E-090	GSM-P 64-AS-E-180	GSM-P 64-IS-E-090	GSM-P 64-IS-E-180
ID		0304660	0303860	0304661	0303861	0304662	0303862
Stroke per jaw	[mm]	10	10	10	10	10	10
Closing- / opening force	[N]	120/114	120/114	162/-	162/-	-/147	-/147
min. spring force	[N]			42	42	33	33
Torque	[Nm]	2.7	2.7	2.7	2.7	2.7	2.7
Angle of rotation	[°]	90	180	90	180	90	180
End position adjustability	[°]	90	180	90	180	90	180
Dampening for swiveling		Elastomer	Elastomer	Elastomer	Elastomer	Elastomer	Elastomer
Recommended workpiece weight	[kg]	0.61	0.61	0.61	0.61	0.61	0.61
Air consumption for gripping	[cm³]	15.81	15.81	15.81	15.81	15.81	15.81
Air consumption for swiveling	[cm³]	51	85	51	85	51	85
Weight	[kg]	1.39	1.39	1.51	1.51	1.51	1.51
Nominal operating pressure	[bar]	6	6	6	6	6	6
max. operating pressure	[bar]	6.5	6.5	6.5	6.5	6.5	6.5
min. operating pressure for gripping	[bar]	2	2	4	4	4	4
min. operating pressure for swiveling	[bar]	3	3	3	3	3	3
Closing- / opening time	[s]	0.01/0.01	0.01/0.01	0.01/0.02	0.01/0.02	0.02/0.01	0.02/0.01
Swiveling time with middle attached load	[s]	0.14	0.24	0.14	0.24	0.14	0.24
max. permitted finger length	[mm]	64	64	64	64	64	64
max. permitted weight per finger	[kg]	0.24	0.24	0.24	0.24	0.24	0.24
max. mass moment of inertia	[kgmm²]	90	90	91	91	91	91
IP class		30	30	30	30	30	30
min. / max. ambient temperature	[°C]	5/90	5/90	5/90	5/90	5/90	5/90
Repeat accuracy for gripping	[mm]	0.02	0.02	0.02	0.02	0.02	0.02
Repeat accuracy for swiveling	[°]	0.1	0.1	0.1	0.1	0.1	0.1
Options and their characteristics							
Version of shock absorber		GSM-P 64-S-090	GSM-P 64-S-180	GSM-P 64-AS-S-090	GSM-P 64-AS-S-180	GSM-P 64-IS-S-090	GSM-P 64-IS-S-180
ID		0304760	0303960	0304761	0303961	0304762	0303962
Dampening for swiveling		hydraulic absorber	hydraulic absorber	hydraulic absorber	hydraulic absorber	hydraulic absorber	hydraulic absorber
max. mass moment of inertia	[kgmm²]	340	340	341	341	341	341
min. / max. ambient temperature	[°C]	5/60	5/60	5/60	5/60	5/60	5/60

Main view

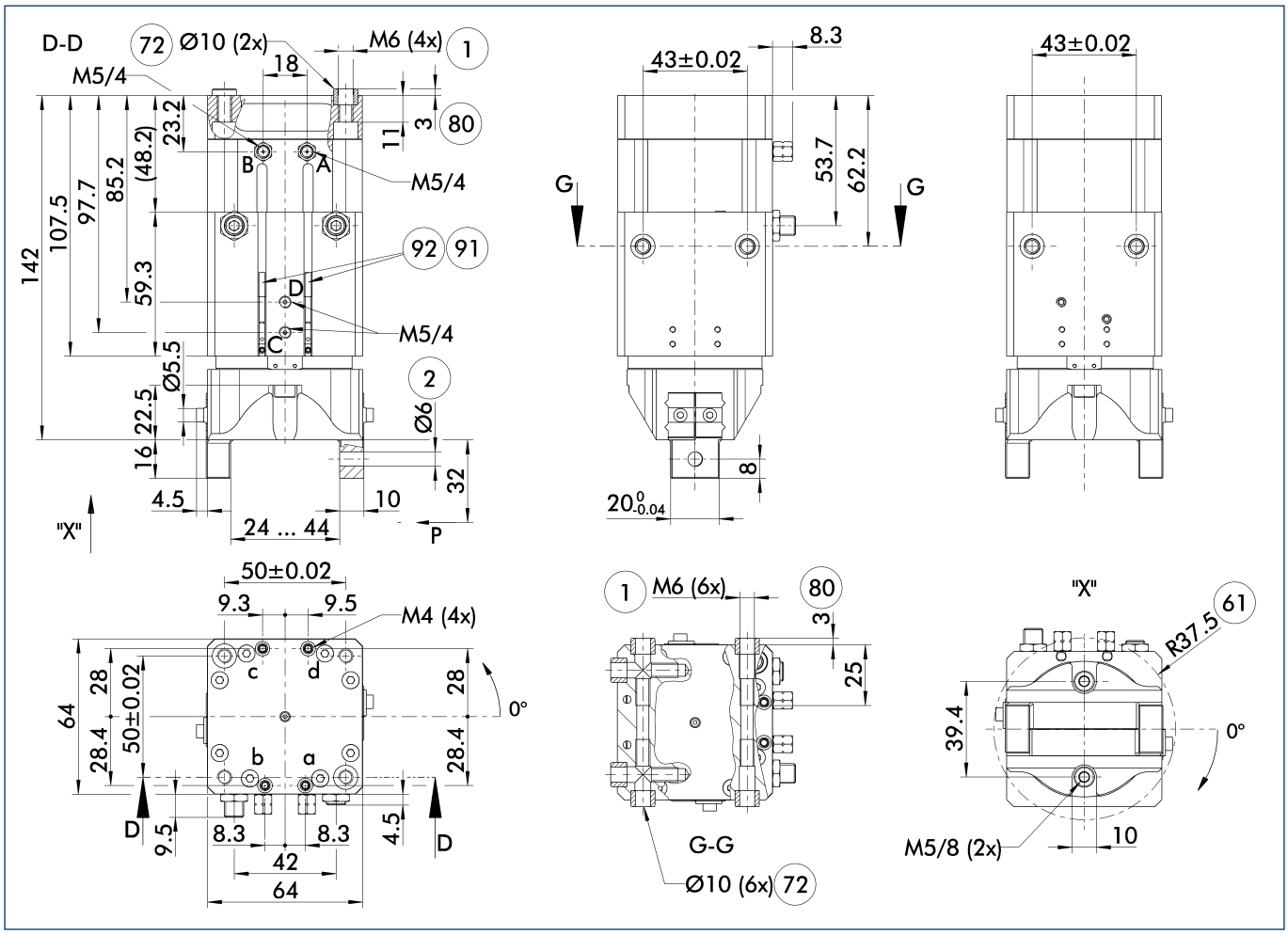

The drawing shows the basic version of the gripper with open jaws, without dimensional consideration of the options described below.

ⓘ The SDV-P pressure maintenance valve can also be used for I.D. or O.D. gripping alternatively or in addition to the spring-loaded, mechanical gripping force maintenance device (see catalog section on "Accessories").

A, a Main / direct connection, rotary actuator rotates clockwise

B, b Main / direct connection, rotary actuator rotates counterclockwise

C, c Main / direct connection, gripper "open"

D, d Main / direct connection, gripper "closed"

(1) Rotary actuator connection

(2) Attachment connection

(61) Interfering contour during swiveling

(72) Fit for centering sleeves

(80) Depth of the centering sleeve hole in the mating part

(91) Monitoring of gripping and swiveling

(92) MMS-P22

Monitoring for stacked arrangement

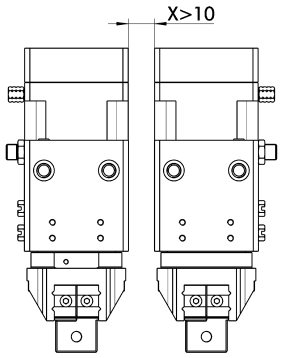

Caution: Monitoring is carried out by magnetic switches, and in case of side-by-side assembly of several units, a minimum distance of X mm between the units must be maintained.

Hose-free direct connection M4

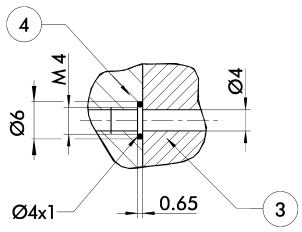

3 Adapter

4 Rotary actuator

The direct connection is used for supplying compressed air without hoses. Instead, the pressure medium is fed through bore-holes in the mounting plate.

Gripping force maintenance device AS / IS

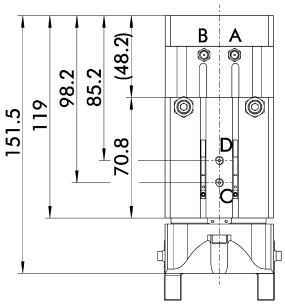

The mechanical maintenance of gripping force also assures a minimum gripping force in the case of a loss of pressure. With the AS / S variant, this acts as a closing force, and as an opening force for the IS variant. The maintenance of gripping force element can also be used as a means for increasing gripping force or for single actuated gripping.

Jaw design

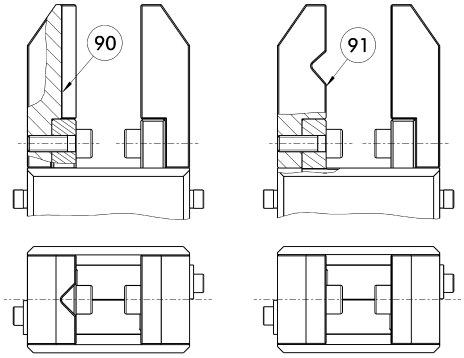

90 Vertical prism

91 Horizontal prism

A three-point support of the gripped workpiece is beneficial for gripping the workpiece with repeat accuracy and process reliability. More than three support points lead to a redundancy of the system. The drawing shows two alternative recommendations for the jaw design for coaxial and radial gripping of a cylindrical part.

Version with shock absorbers

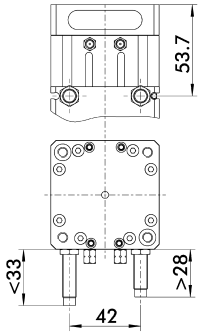

The drawing shows the dimensional changes of the shock absorber versions as compared to the drawing in the main view which shows the elastomer version.

ABR-MPG-plus 64 finger blanks

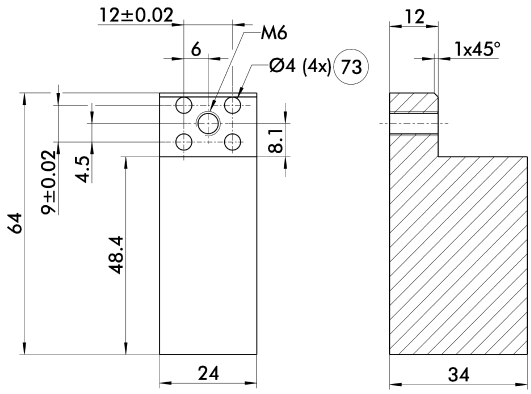

(73) Fit for centering pins

Finger blanks for customized subsequent machining.

Description	ID	Material	Scope of delivery
Finger blanks			
ABR-MPG-plus 64	0340215	Aluminum	2

Mounting kit for proximity switch – 90° / 180° angle of rotation

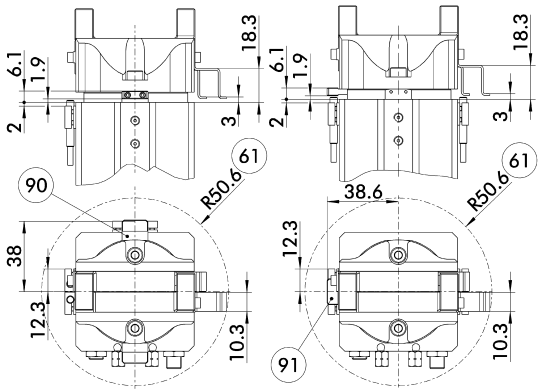

(61) Interfering contour during swiveling
(90) Variant for 90° version
(91) Variant for 180° version

The mounting kit for the 90° and 180° GSM versions is identical, only the mounting is different. The mounting kit consists of two switch cams, two operating cams, four sensor brackets and small components. The proximitiy switches must be ordered separately.

Description	ID	
Mounting kit for proximity switch		
AS-GSM-P 64	0304937	

Inductive proximity switches

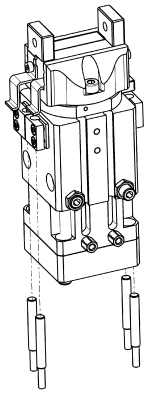

Limit position monitor can be mounted with mounting kit.

Description	ID	Often combined
Mounting kit for proximity switch		
AS-GSM-P 64	0304937	
Inductive proximity switches		
IN 40-S-M12	0301574	
IN 40-S-M8	0301474	●
INK 40-S	0301555	
Cable extensions		
KV BG12-SG12 3P-0030-PNP	0301999	
KV BG12-SG12 3P-0060-PNP	0301998	
KV BW08-SG08 3P-0030-PNP	0301495	
KV BW08-SG08 3P-0100-PNP	0301496	
KV BW08-SG08 3P-0200-PNP	0301497	●
KV BW12-SG12 3P-0030-PNP	0301595	
KV BW12-SG12 3P-0100-PNP	0301596	
KV BW12-SG12 3P-0200-PNP	0301597	
Clip for plug / socket		
CLI-M12	0301464	
CLI-M8	0301463	
Connection cables		
KA BG08-L 3P-0300-PNP	0301622	●
KA BG08-L 3P-0500-PNP	0301623	
KA BG12-L 3P-0500-PNP	30016369	
KA BW08-L 3P-0300-PNP	0301594	
KA BW08-L 3P-0500-PNP	0301502	
KA BW12-L 3P-0300-PNP	0301503	
KA BW12-L 3P-0500-PNP	0301507	
Sensor distributor		
V2-M8	0301775	●
V2-M12	0301776	●
V4-M12	0301747	
V4-M8	0301746	
V8-M12	0301752	
V8-M8	0301751	

ⓘ Two sensors (closer/S) are required for each unit, plus extension cables as an option. This mounting kit needs to be ordered optionally as an accessory. Please note the minimum permitted bending radii for the sensor cables, which are generally 35 mm.

MMS-P programmable magnetic switches

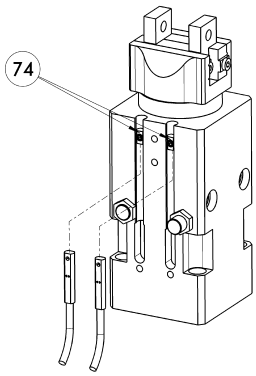

(74) Stop for MMS-P

Position monitoring with two programmable positions per sensor. The end position monitoring is mounted in the C-slot.

Description	ID	Often combined
MMS-P programmable magnetic switches		
MMSK-P 22-S-PNP	0301371	
MMS-P 22-S-M8-PNP	0301370	●
Clip for plug / socket		
CLI-M8	0301463	
Connection cables		
KA BG08-L 4P-0500	0307767	●
KA BG08-L 4P-1000	0307768	
KA BW08-L 4P-0500	0307765	
KA BW08-L 4P-1000	0307766	
Sensor distributor		
V2-M8-4P-2XM8-3P	0301380	

ⓘ Per each GSM two sensors MMS-P are required. If standard extension cables (M8-3P) are used, the sensor distributor can be applied.

SCHUNK Special Gripper for a higher Productivity and the individual Use in your Machine Tool.

Special Grippers

ORG O-Ring Assembly Gripper

Series	Size
ORG	
ORG	85

For more informationen on this product please visit **www.schunk.com**.

Gripper with GSW-B Shaft Interface

Series	Size
GSW-B	
GSW-B	50-100

For more informationen on this product please visit **www.schunk.com**.

Gripper with GSW-B Shaft Interface and Compensation Unit

Series	Size
GSW-B-AGE	
GSW-B-AGE	50-100

For more informationen on this product please visit **www.schunk.com**.

GSW-V Vacuum Gripper

Series	Size
GSW-V	
GSW-V	20

Series	Size
GSW-V	25
GSW-V	32

For more informationen on this product please visit **www.schunk.com**.

GSW-M Magnetic Gripper

Series	Size
GSW-M	
GSW-M	20

For more informationen on this product please visit **www.schunk.com**.

RGG Cleaning Unit

Series
RGG

For more informationen on this product please visit **www.schunk.com**.

SCHUNK Original Accessories fit 100%.

Accessories

Sensor Systems

IN Inductive Proximity Switch

Series	Size	Page
IN		1628
IN	3	1630
IN	5	1632
IN	8	1634
IN	40	1636
IN	41	1638

Series	Size	Page
IN	50	1640
IN	55	1642
IN	60	1644
IN	65	1646
IN	80	1648
IN	120	1652

NI Inductive Proximity Switch

Series	Size
NI	

For more informationen on this product please visit **www.schunk.com**.

MMS Electronic Magnetic Switch

Series	Size	Page
MMS		1654
MMS	22	1656
MMS	30	1660

Series	Size	Page
MMS	65	1664

MMS PI1 Programmable Magnetic Switch

Series	Size	Page
MMS PI1		1666
MMS PI1	22	1668

MMS PI2 Programmable Magnetic Switch

Series	Size	Page
MMS PI2		1672
MMS PI2	22	1674

Sensor Systems

MMS-P Programmable Magnetic Switch

Series	Size	Page
MMS-P		1678
MMS-P	22	1680

RMS Reed Switch

Series	Size	Page
RMS		1682
RMS	22	1684
RMS	80	1686

ONS Optical Proximity Switch

Series	Size
ONS	
ONS	01

For more informationen on this product please visit **www.schunk.com**.

OAS Optical Distance Sensor

Series	Size	Page
OAS		1688
OAS	OAS-V	1690

APS-Z80 Analog Position Sensor

Series	Size	Page
APS-Z80		1692
APS-Z80	Sensor	1694

APS-M1 Analog Position Sensor

Series	Size	Page
APS-M1		1696
APS-M1	M1	1698

FPS Flexible Position Sensor

Series	Size	Page
FPS		1700
FPS	FPS-S	1702
FPS	FPS-F5	1704

FMS Force Measuring Jaws

Series	Size	Page
FMS		1706
FMS	50-300	1708

Sensor System Accessories

RSS Radio Sensor System

Series	Size
RSS	
RSS	RSS-T2

Series	Size
RSS	RSS-R1

For more informationen on this product please visit **www.schunk.com**.

SST Sensor Tester

Series	Size	Page
SST		1712

CLI Clip

Series	Size	Page
CLI		1716

NHG Adjustable Housing

Series	Size
NHG	

For more informationen on this product please visit **www.schunk.com**.

Cables, Connectors, and Distributors

KA Connection Cable

Series	Size	Page
KA		1720
KA	M8	1722
KA	M9	1724

Series	Size	Page
KA	M12	1726
KA	M16	1728

KBU / KST Cable Connector

Series	Size	Page
KBU / KST		1730
KBU / KST	M8	1732
KBU / KST	M12	1734

Series	Size	Page
KBU / KST	M16	1736

KV Cable Extension

Series	Size	Page
KV		1738
KV	M8	1740
KV	M12	1742

V Sensor Distributor

Series	Size	Page
Sensor Distributor		1744
Sensor Distributor	Y	1746
Sensor Distributor	V2	1748

Series	Size	Page
Sensor Distributor	V4	1750
Sensor Distributor	V8	1752

Motor Controllers

ECM Controller

Series	Size	Page
ECM		1754

MCS Motor Controller

Series	Size
MCS	
MCS	06

For more informationen on this product please visit **www.schunk.com**.

Fastening Elements

ZHU / ZH / RMZ / LMZL Centering Element

Series	Size	Page
Centering Element		1760
Centering Element	ZHU	1762
Centering Element	RMZ	1764

Series	Size	Page
Centering Element	LMZL	1766

Jaw Systems

BSWS Jaw Quick-change System

Series	Size	Page
BSWS		1768
BSWS	BSWS-B / -A	1770
BSWS	BSWS-AR / -UR	1774

UZB Universal Intermediate Jaw

Series	Size
UZB	
UZB	40-200

For more informationen on this product please visit **www.schunk.com**.

Fingers and Jaws

ABR-SBR-RB Finger Blanks

Series	Size
ABR-SBR-RB	
ABR-SBR-RB	for MPG-plus
ABR-SBR-RB	for KTG

Series	Size
ABR-SBR-RB	for KGG
ABR-SBR-RB	for PGN- / PZN-plus
ABR-SBR-RB	for MPZ

For more informationen on this product please visit **www.schunk.com**.

BSWS-ABR / -SBR Finger Blanks

Series	Size
BSWS-ABR / -SBR	
BSWS-ABR / -SBR	50-160

For more informationen on this product please visit **www.schunk.com**.

Clamping Inserts

Quentes Plastic Inserts

Series	Size
Quentes	
Quentes	5-10

For more informationen on this product please visit **www.schunk.com**.

HM Carbide Inserts

Series	Size
HM	
HM	6-15

For more informationen on this product please visit **www.schunk.com**.

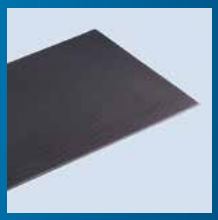

HKI Gripper Pad

Series	Size
HKI	
HKI	1

For more informationen on this product please visit **www.schunk.com**.

Covers

HUE Protection Cover

Series	Size
HUE	
HUE	EGN
HUE	EZN

Series	Size
HUE	PGN-plus
HUE	PZN-plus

For more informationen on this product please visit **www.schunk.com**.

Valves and Fittings

WV Elbow Fitting

Series	Size
WV	

For more informationen on this product please visit **www.schunk.com**.

SWV Swivel Fitting

Series	Size
SWV	

For more informationen on this product please visit **www.schunk.com**.

DRV Banjo Fitting with One-way flow control Valves

Series	Size
DRV	

For more informationen on this product please visit **www.schunk.com**.

SDV-P Pressure Maintenance Valve

Series	Size	Page
SDV-P		1780

Greases

Greases

Series	Size
Grease	
Grease	0

For more informationen on this product please visit **www.schunk.com**.

Reliable. No-Contact. Easy assembly.

IN Inductive Proximity Switch

Inductive proximity switches are used to monitor the current status of automation components. SCHUNK supplies them in two versions – IN (sensor with 30 cm molded cable and cable connector) and INK (sensor with 2 m supply cable and wire strands for connecting)

Field of Application

For monitoring of gripping and rotary modules, linear modules and robot accessories. Inductive SCHUNK sensors detect metals without contact and are resistant to vibration, dust and humidity. For connection with a digital input module (utilization category DC-12).

Advantages – Your benefit

Mounting using holder for easy and fast attachment

Version with LED-display for checking the switching position directly at the sensor

Version with connector for fast and easy exchangeability of the extension cable

Very flexible cable in PUR-version for a long service lifetime and resistance against chemicals

Proximity switches for flush installation for minimal interfering contours in the application

Options and special Information

Protection class as per DIN 40050: IP67 in plugged position for the use in clean or dusty environments or if contact with water is given. Functionability in case of contact with other mediums (coolant, acids, bases, etc.) is often given, however cannot be guaranteed by SCHUNK

Power supply: 10 – 30 V DC at < 15 % residual ripple

Type of switching: PNP

Warranty: 24 months (details, general terms and conditions and operating manuals can be downloaded at www.schunk.com)

Application example

① **NI Sensors, pluggable**

② **SRU-plus Rotary Actuator**

③ **PGN-plus Universal Gripper**

④ **KST Cable Connector**

SCHUNK offers more ...

The following components make the product IN even more productive – the suitable addition for the highest functionality, flexibility, reliability, and controlled production.

Sensor Cables

Sensor Distributor

ⓘ Further information regarding the products can be found on the following product pages or at www.schunk.com. Please contact us for further information: SCHUNK technical hotline +49-7133-103-2696

CAD data, operating manuals and other current product documents are available at **www.schunk.com**

Technical data

Description		IN 3-S-M8-PNP
ID		0301466
Switching function		Closer
Type of switching		PNP
Switching distance	[mm]	0.8
Switching hysterisis from the nominal switching distance		< 5%
max. switching frequency	[Hz]	3000
Product weight	[kg]	0.05
min. / max. ambient temperature	[°C]	-25/75
IP class (sensor)		67
IP class (sensor connected)		67
Type of voltage		DC
Nominal voltage	[V]	24
min. voltage	[V]	10
max. voltage	[V]	30
Voltage drop	[V]	2
max. switching current	[A]	0.1
Cable diameter D	[mm]	2.5
min. bending radius (dynamically)	[mm]	25
min. bending radius (statically)	[mm]	12.5
Number of wires		3
Wire cross section	[mm²]	0.14
Cable length L	[cm]	20
Cable connector/cable end		M8

IN 3 main view

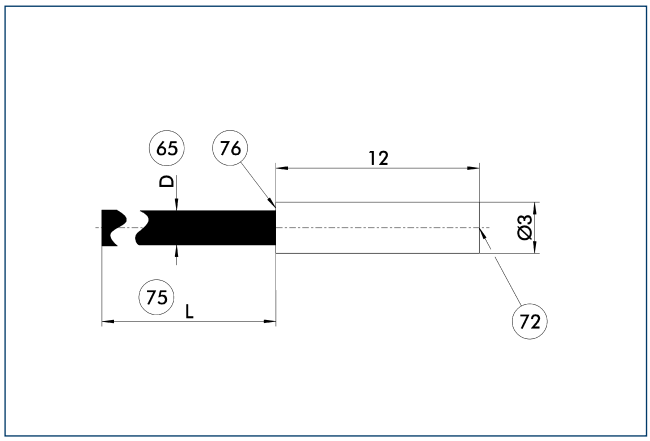

65 Cable diameter
72 Active sensor surface
75 Cable length
76 LED

Wiring diagram closer PNP

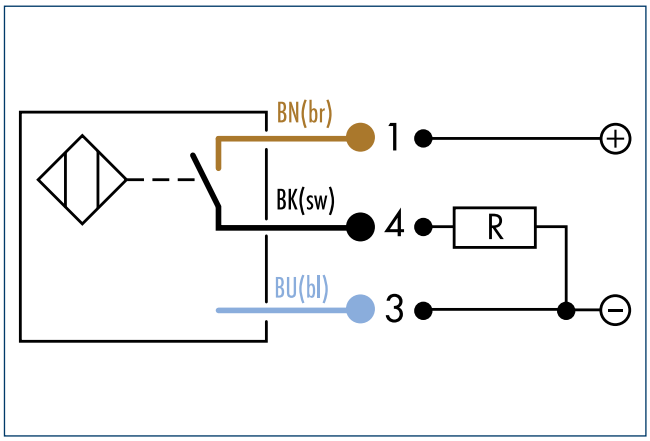

Cable connector / cable extension

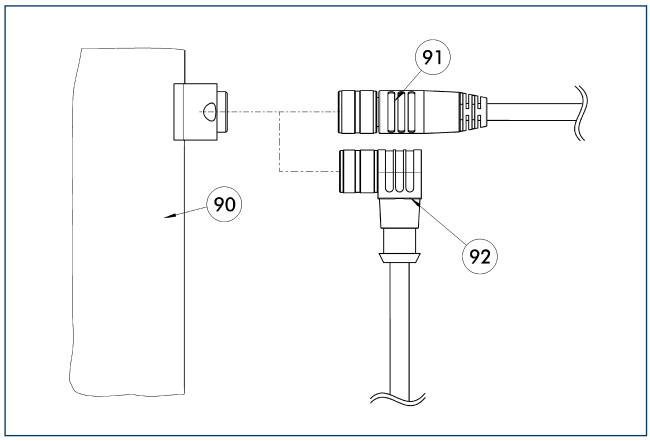

90 Connecting point for component
91 Cable with straight connection
92 Cable with angular connection

Description	ID	Length [m]	Connection electric cabinet sided	Often combined
Cable extensions				
KV BW08-SG08 3P-0030-PNP	0301495	0.3	Connector	
KV BW08-SG08 3P-0100-PNP	0301496	1	Connector	
KV BW08-SG08 3P-0200-PNP	0301497	2	Connector	●
Connection cables				
KA BG08-L 3P-0300-PNP	0301622	3	open wires	●
KA BG08-L 3P-0500-PNP	0301623	5	open wires	
KA BW08-L 3P-0300-PNP	0301594	3	open wires	
KA BW08-L 3P-0500-PNP	0301502	5	open wires	

ⓘ BG stands for a connection cable with a straight female connector and BW for an angled female connector.

Technical data

Description		IN 5-S-M8	IN 5-S-M12	INK 5-S
ID		0301469	0301569	0301501
Switching function		Closer	Closer	Closer
Type of switching		PNP	PNP	PNP
Switching distance	[mm]	1	1	1
Switching hysterisis from the nominal switching distance		< 15%	< 15%	< 15%
max. switching frequency	[Hz]	3000	3000	3000
Product weight	[kg]	0.05	0.05	0.06
min. / max. ambient temperature	[°C]	-25/70	-25/70	-25/70
IP class (sensor)		67	67	67
IP class (sensor connected)		67	67	67
LED display at the sensor		no	no	no
Type of voltage		DC	DC	DC
Nominal voltage	[V]	24	24	24
min. voltage	[V]	10	10	10
max. voltage	[V]	30	30	30
Voltage drop	[V]	1.5	1.5	1.5
max. switching current	[A]	0.2	0.2	0.2
Cable diameter D	[mm]	3.5	3.5	3.5
min. bending radius (dynamically)	[mm]	35	35	35
min. bending radius (statically)	[mm]	17.5	17.5	17.5
Number of wires		3	3	3
Wire cross section	[mm²]	0.14	0.14	0.14
Cable length L	[cm]	30	30	200
Cable connector/cable end		M8	M12	open wires

IN 5 main view

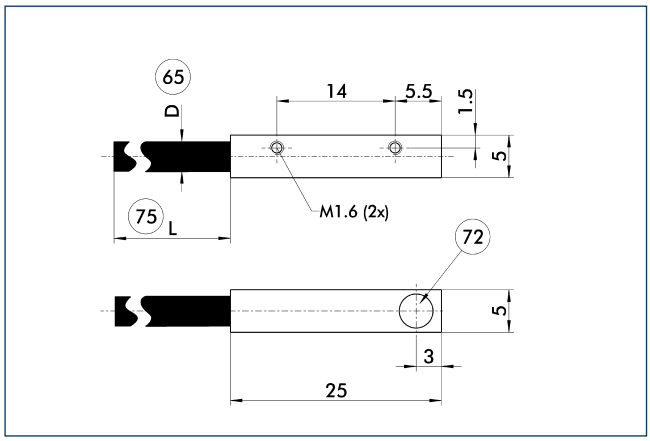

65 Cable diameter
72 Active sensor surface
75 Cable length

Wiring diagram closer PNP

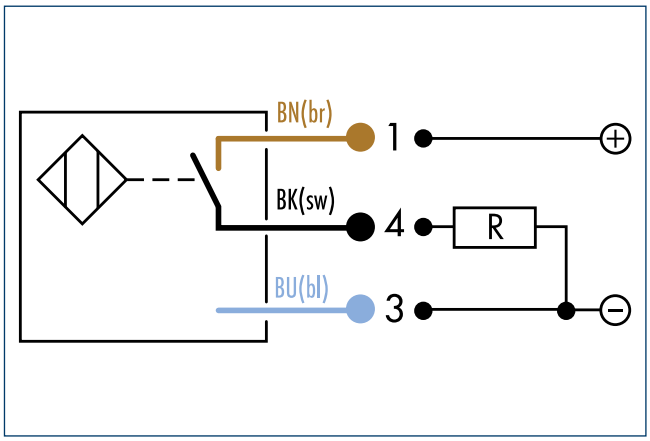

Cable connector / cable extension

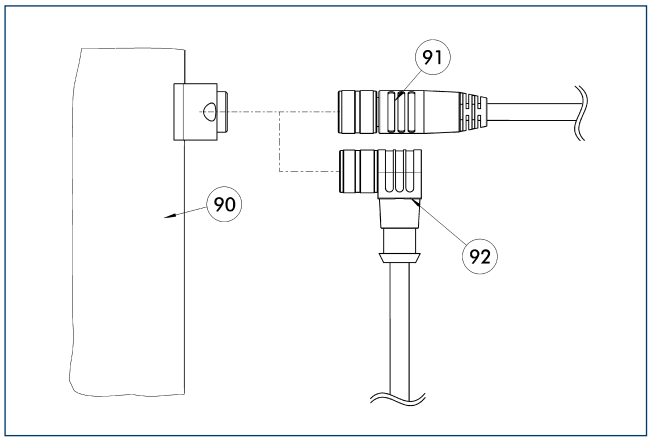

90 Connecting point for component
91 Cable with straight connection
92 Cable with angular connection

Description	ID	Length [m]	Connection electric cabinet sided	Often combined
Cable extensions				
KV BG12-SG12 3P-0030-PNP	0301999	0.3	Connector	
KV BG12-SG12 3P-0060-PNP	0301998	0.6	Connector	
KV BW08-SG08 3P-0030-PNP	0301495	0.3	Connector	
KV BW08-SG08 3P-0100-PNP	0301496	1	Connector	
KV BW08-SG08 3P-0200-PNP	0301497	2	Connector	●
KV BW12-SG12 3P-0030-PNP	0301595	0.3	Connector	
KV BW12-SG12 3P-0100-PNP	0301596	1	Connector	
KV BW12-SG12 3P-0200-PNP	0301597	2	Connector	
Connection cables				
KA BG08-L 3P-0300-PNP	0301622	3	open wires	●
KA BG08-L 3P-0500-PNP	0301623	5	open wires	
KA BG12-L 3P-0500-PNP	30016369	5	open wires	
KA BW08-L 3P-0300-PNP	0301594	3	open wires	
KA BW08-L 3P-0500-PNP	0301502	5	open wires	
KA BW12-L 3P-0300-PNP	0301503	3	open wires	
KA BW12-L 3P-0500-PNP	0301507	5	open wires	

ⓘ BG stands for a connection cable with a straight female connector and BW for an angled female connector.

Technical data

Description		IN 8-S-M8	IN 8-S-M12	INK 8-S
ID		0301481	0301581	9700052
Switching function		Closer	Closer	Closer
Type of switching		PNP	PNP	PNP
Switching distance	[mm]	1.5	1.5	0.8
Switching hysterisis from the nominal switching distance		< 10%	< 10%	< 15%
max. switching frequency	[Hz]	3000	3000	3000
Product weight	[kg]	0.04	0.08	0.01
min. / max. ambient temperature	[°C]	-25/70	-25/70	-25/70
IP class (sensor)		67	67	67
IP class (sensor connected)		67	67	67
LED display at the sensor		no	no	no
Type of voltage		DC	DC	DC
Nominal voltage	[V]	24	24	24
min. voltage	[V]	10	10	10
max. voltage	[V]	30	30	30
Voltage drop	[V]	1.5	1.5	1.5
max. switching current	[A]	0.2	0.2	0.2
Cable diameter D	[mm]	3.5	3.5	3.5
min. bending radius (dynamically)	[mm]	35	35	35
min. bending radius (statically)	[mm]	17.5	17.5	17.5
Number of wires		3	3	3
Wire cross section	[mm²]	0.14	0.14	0.14
Cable length L	[cm]	30	30	200
Cable connector/cable end		M8	M12	open wires

IN 8 main view

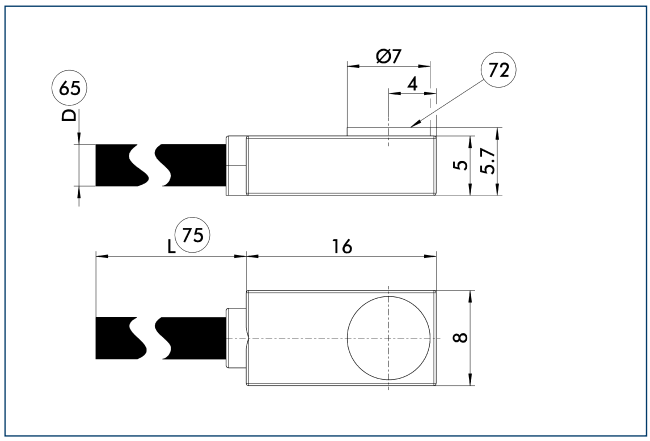

65 Cable diameter
72 Active sensor surface
75 Cable length

Wiring diagram closer PNP

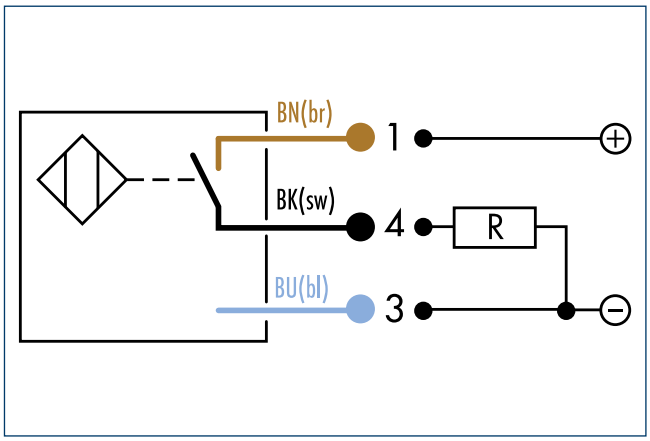

Cable connector / cable extension

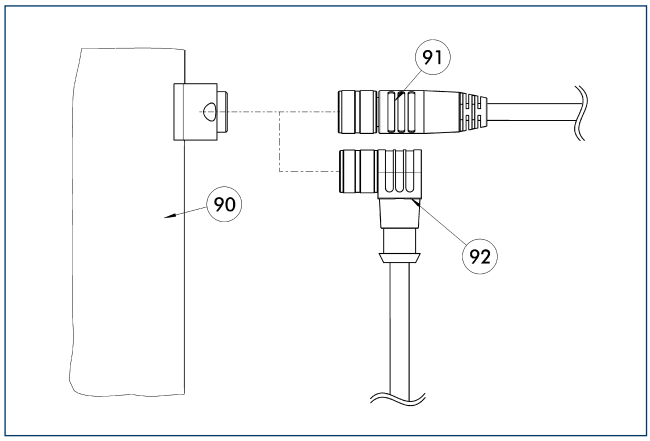

90 Connecting point for component
91 Cable with straight connection
92 Cable with angular connection

Description	ID	Length [m]	Connection electric cabinet sided	Often combined
Cable extensions				
KV BG12-SG12 3P-0030-PNP	0301999	0.3	Connector	
KV BG12-SG12 3P-0060-PNP	0301998	0.6	Connector	
KV BW08-SG08 3P-0030-PNP	0301495	0.3	Connector	
KV BW08-SG08 3P-0100-PNP	0301496	1	Connector	
KV BW08-SG08 3P-0200-PNP	0301497	2	Connector	●
KV BW12-SG12 3P-0030-PNP	0301595	0.3	Connector	
KV BW12-SG12 3P-0100-PNP	0301596	1	Connector	
KV BW12-SG12 3P-0200-PNP	0301597	2	Connector	
Connection cables				
KA BG08-L 3P-0300-PNP	0301622	3	open wires	●
KA BG08-L 3P-0500-PNP	0301623	5	open wires	
KA BG12-L 3P-0500-PNP	30016369	5	open wires	
KA BW08-L 3P-0300-PNP	0301594	3	open wires	
KA BW08-L 3P-0500-PNP	0301502	5	open wires	
KA BW12-L 3P-0300-PNP	0301503	3	open wires	
KA BW12-L 3P-0500-PNP	0301507	5	open wires	

ⓘ BG stands for a connection cable with a straight female connector and BW for an angled female connector.

Technical data

Description		IN 40-S-M8	IN 40-S-M12	INK 40-S	IN 40-O-M8	IN 40-O-M12	INK 40-O
ID		0301474	0301574	0301555	0301484	0301584	0301556
Switching function		Closer	Closer	Closer	Opener	Opener	Opener
Type of switching		PNP	PNP	PNP	PNP	PNP	PNP
Switching distance	[mm]	0.8	0.6	0.8	0.6	0.6	0.8
Switching hysterisis from the nominal switching distance		< 5%	< 5%	< 5%	< 5%	< 5%	< 5%
max. switching frequency	[Hz]	3000	3000	3000	3000	3000	3000
Product weight	[kg]	0.04	0.05	0.06	0.04	0.05	0.04
min. / max. ambient temperature	[°C]	-25/70	-25/70	-25/70	-25/70	-25/70	-25/70
IP class (sensor)		67	67	67	67	67	67
IP class (sensor connected)		67	67	67	67	67	67
LED display at the sensor		yes	yes	yes	yes	yes	yes
Type of voltage		DC	DC	DC	DC	DC	DC
Nominal voltage	[V]	24	24	24	24	24	24
min. voltage	[V]	10	10	10	10	10	10
max. voltage	[V]	30	30	30	30	30	30
Voltage drop	[V]	0.6	0.6	0.6	0.6	0.6	0.6
max. switching current	[A]	0.2	0.2	0.2	0.2	0.2	0.2
Cable diameter D	[mm]	3.5	3.5	3.5	3.5	3.5	3.5
min. bending radius (dynamically)	[mm]	35	35	35	35	35	35
min. bending radius (statically)	[mm]	17.5	17.5	17.5	17.5	17.5	17.5
Number of wires		3	3	3	3	3	3
Wire cross section	[mm²]	0.14	0.14	0.14	0.14	0.14	0.14
Cable length L	[cm]	30	30	200	30	30	200
Cable connector/cable end		M8	M12	open wires	M8	M12	open wires
Options and their characteristics							
Version with lateral cable outlet		IN 40-S-M8-SA	IN 40-S-M12-SA	INK 40-S-SA			
ID		0301473	0301577	0301565			

IN 40 main view

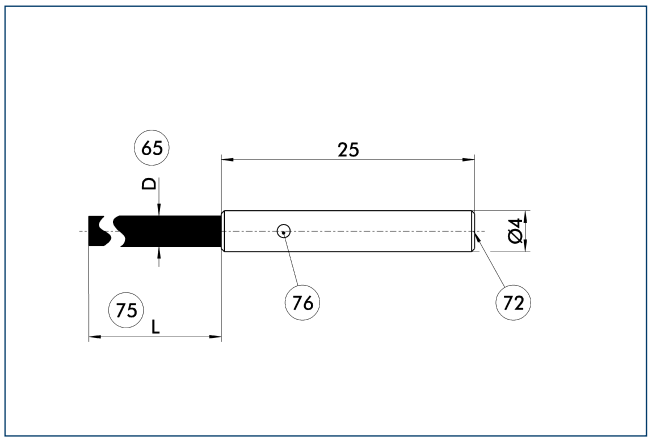

65 Cable diameter
72 Active sensor surface
75 Cable length
76 LED

Wiring diagram opener PNP

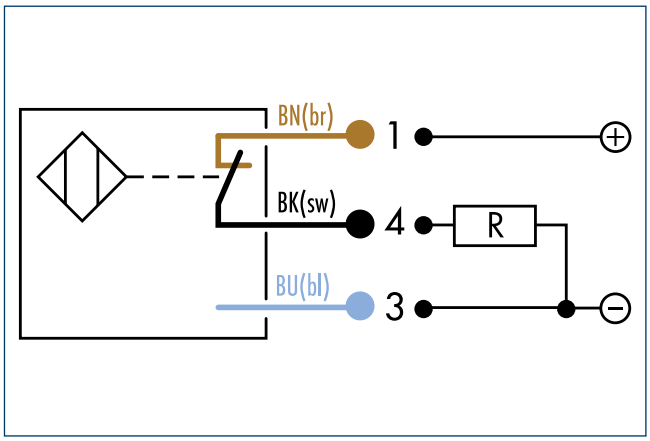

Wiring diagram closer PNP

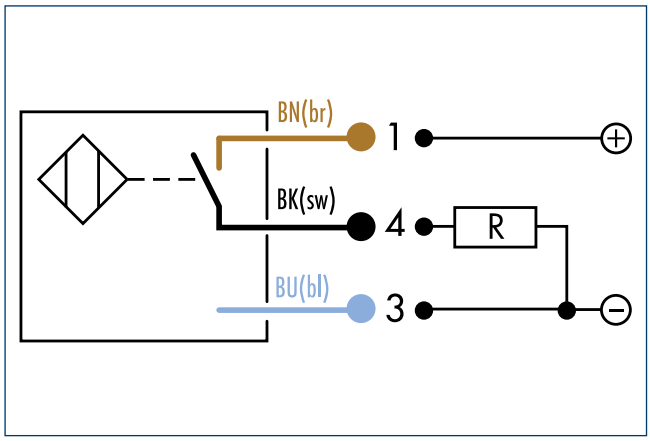

Cable connector / cable extension

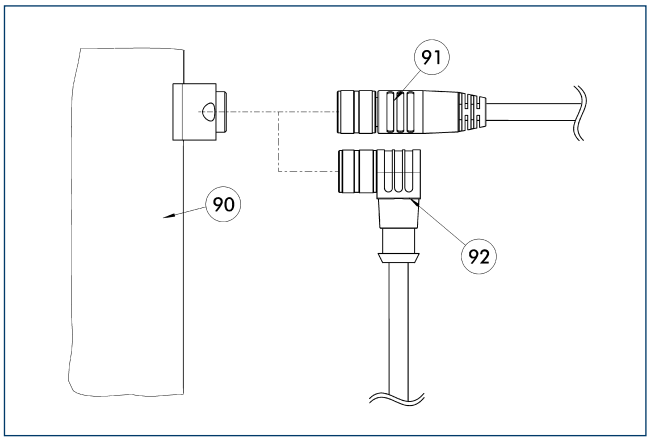

90 Connecting point for component
91 Cable with straight connection
92 Cable with angular connection

Description	ID	Length [m]	Connection electric cabinet sided	Often combined
Cable extensions				
KV BG12-SG12 3P-0030-PNP	0301999	0.3	Connector	
KV BG12-SG12 3P-0060-PNP	0301998	0.6	Connector	
KV BW08-SG08 3P-0030-PNP	0301495	0.3	Connector	
KV BW08-SG08 3P-0100-PNP	0301496	1	Connector	
KV BW08-SG08 3P-0200-PNP	0301497	2	Connector	●
KV BW12-SG12 3P-0030-PNP	0301595	0.3	Connector	
KV BW12-SG12 3P-0100-PNP	0301596	1	Connector	
KV BW12-SG12 3P-0200-PNP	0301597	2	Connector	
Connection cables				
KA BG08-L 3P-0300-PNP	0301622	3	open wires	●
KA BG08-L 3P-0500-PNP	0301623	5	open wires	
KA BG12-L 3P-0500-PNP	30016369	5	open wires	
KA BW08-L 3P-0300-PNP	0301594	3	open wires	
KA BW08-L 3P-0500-PNP	0301502	5	open wires	
KA BW12-L 3P-0300-PNP	0301503	3	open wires	
KA BW12-L 3P-0500-PNP	0301507	5	open wires	

ⓘ BG stands for a connection cable with a straight female connector and BW for an angled female connector.

Technical data

Description		IN 41-S-M8
ID		9941216
Switching hysterisis from the nominal switching distance		< 15%
max. switching frequency	[Hz]	3000
min. / max. ambient temperature	[°C]	-25/70
IP class (sensor)		67
IP class (sensor connected)		67
LED display at the sensor		no
Type of voltage		DC
Nominal voltage	[V]	24
min. voltage	[V]	10
max. voltage	[V]	30
Voltage drop	[V]	1.5
max. switching current	[A]	0.2
Cable diameter D	[mm]	3.5
min. bending radius (dynamically)	[mm]	35
min. bending radius (statically)	[mm]	17.5
Number of wires		3
Wire cross section	[mm²]	0.14

IN 41 main view

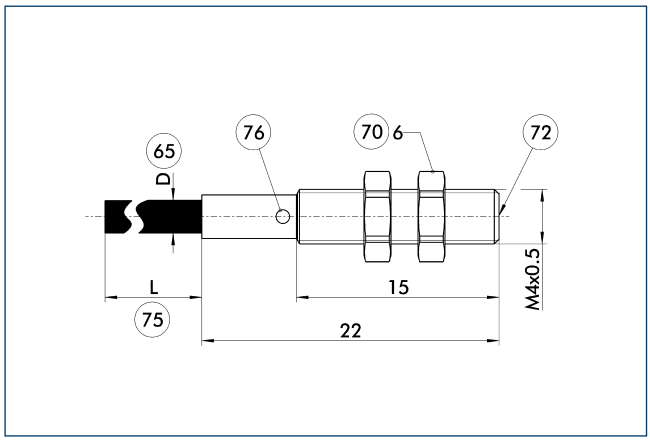

65 Cable diameter
70 Wrench size
72 Active sensor surface
75 Cable length
76 LED

Wiring diagram opener PNP

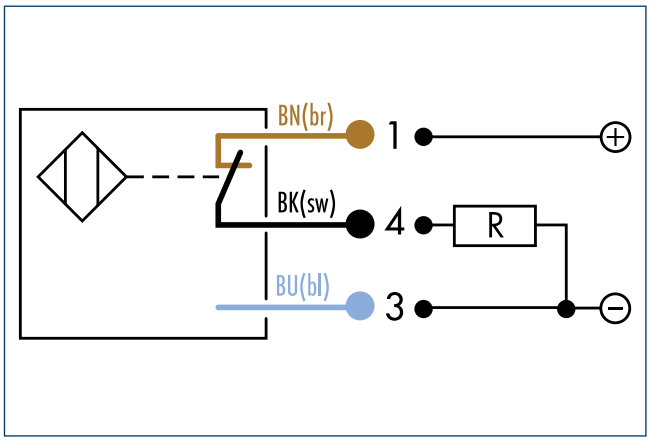

Wiring diagram closer PNP

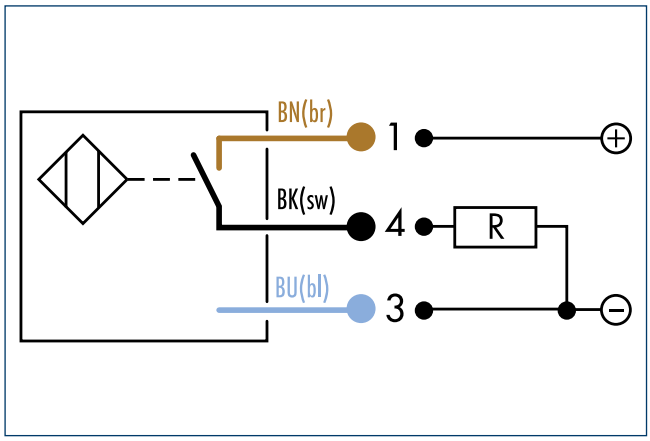

Cable connector / cable extension

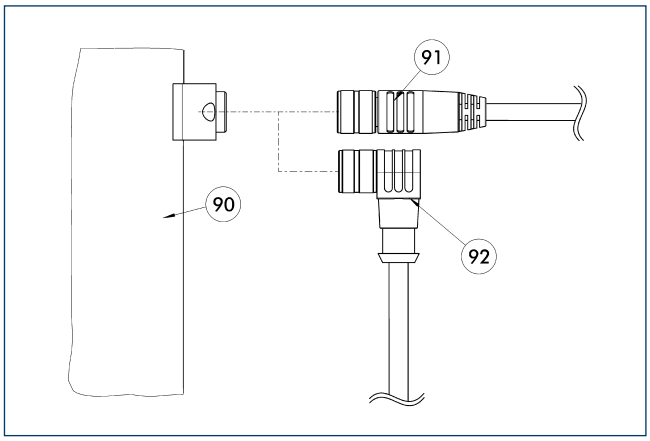

90 Connecting point for component
91 Cable with straight connection
92 Cable with angular connection

Description	ID	Length [m]	Connection electric cabinet sided	Often combined
Connection cables				
KA BG08-L 3P-0300-PNP	0301622	3	open wires	●
KA BG08-L 3P-0500-PNP	0301623	5	open wires	
KA BW08-L 3P-0300-PNP	0301594	3	open wires	
KA BW08-L 3P-0500-PNP	0301502	5	open wires	
Cable extensions				
KV BW08-SG08 3P-0030-PNP	0301495	0.3	Connector	
KV BW08-SG08 3P-0100-PNP	0301496	1	Connector	
KV BW08-SG08 3P-0200-PNP	0301497	2	Connector	●

ⓘ BG stands for a connection cable with a straight female connector and BW for an angled female connector.

Technical data

Description		IN 50-S-M8	IN 50-S-M12	INK 50-S
ID		0301568	0301575	0301560
Switching function		Closer	Closer	Closer
Type of switching		PNP	PNP	PNP
Switching distance	[mm]	1	1	1
Switching hysterisis from the nominal switching distance		< 5%	< 5%	< 5%
max. switching frequency	[Hz]	3000	3000	3000
Product weight	[kg]	0.07	0.07	0.01
min. / max. ambient temperature	[°C]	-25/70	-25/70	-25/70
IP class (sensor)		67	67	67
IP class (sensor connected)		67	67	67
LED display at the sensor		yes	yes	no
Type of voltage		DC	DC	DC
Nominal voltage	[V]	24	24	24
min. voltage	[V]	10	10	10
max. voltage	[V]	30	30	30
Voltage drop	[V]	2	2	2
max. switching current	[A]	0.2	0.2	0.2
Cable diameter D	[mm]	3.5	3.5	3.5
min. bending radius (dynamically)	[mm]	35	35	35
min. bending radius (statically)	[mm]	17.5	17.5	17.5
Number of wires		3	3	3
Wire cross section	[mm²]	0.14	0.14	0.14
Cable length L	[cm]	30	30	200
Cable connector/cable end		M8	M12	open wires

IN 50 main view

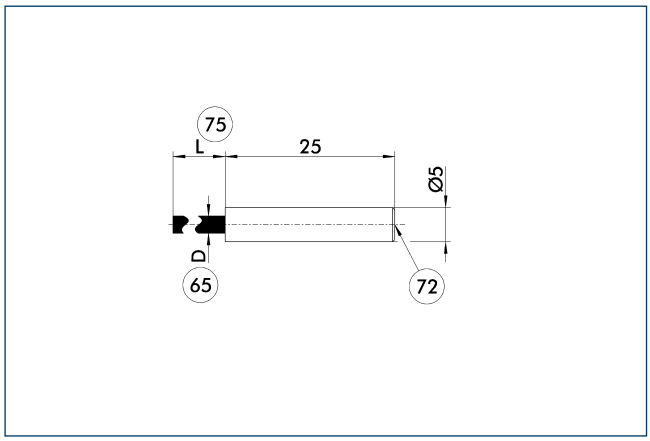

65 Cable diameter
72 Active sensor surface
75 Cable length

Wiring diagram opener PNP

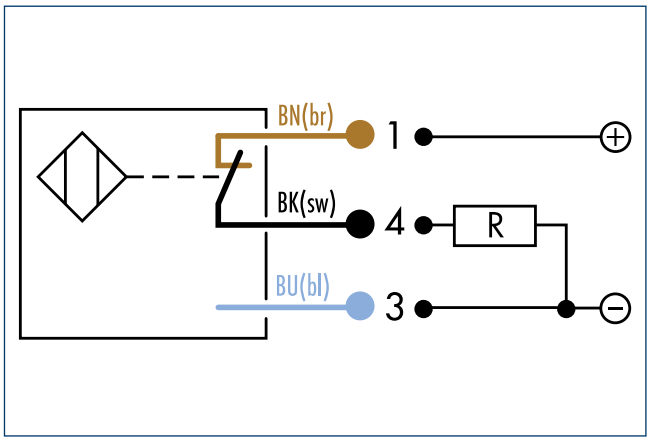

Wiring diagram closer PNP

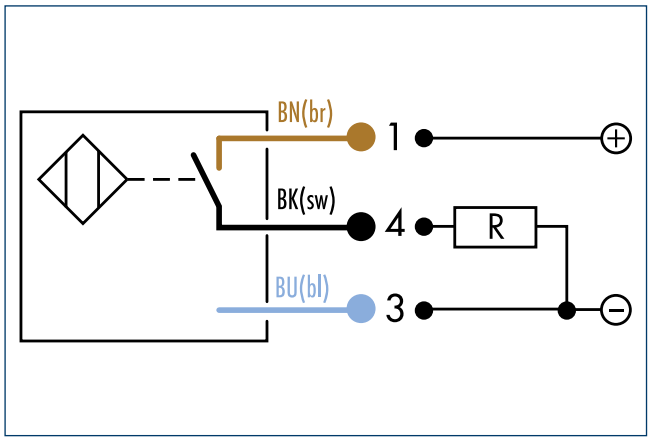

Cable connector / cable extension

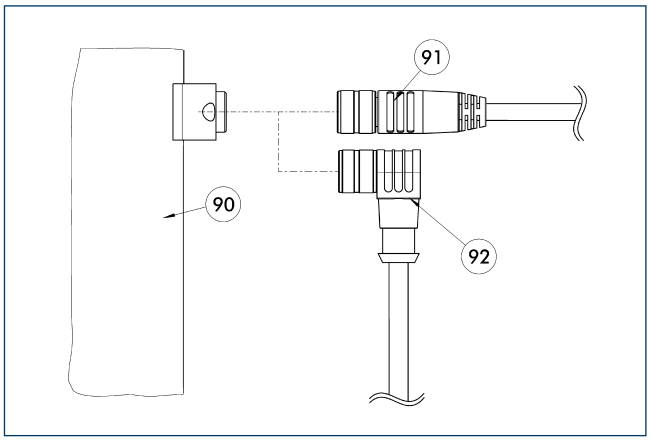

90 Connecting point for component
91 Cable with straight connection
92 Cable with angular connection

Description	ID	Length [m]	Connection electric cabinet sided	Often combined
Cable extensions				
KV BG12-SG12 3P-0030-PNP	0301999	0.3	Connector	
KV BG12-SG12 3P-0060-PNP	0301998	0.6	Connector	
KV BW08-SG08 3P-0030-PNP	0301495	0.3	Connector	
KV BW08-SG08 3P-0100-PNP	0301496	1	Connector	
KV BW08-SG08 3P-0200-PNP	0301497	2	Connector	●
KV BW12-SG12 3P-0030-PNP	0301595	0.3	Connector	
KV BW12-SG12 3P-0100-PNP	0301596	1	Connector	
KV BW12-SG12 3P-0200-PNP	0301597	2	Connector	
Connection cables				
KA BG08-L 3P-0300-PNP	0301622	3	open wires	●
KA BG08-L 3P-0500-PNP	0301623	5	open wires	
KA BG12-L 3P-0500-PNP	30016369	5	open wires	
KA BW08-L 3P-0300-PNP	0301594	3	open wires	
KA BW08-L 3P-0500-PNP	0301502	5	open wires	
KA BW12-L 3P-0300-PNP	0301503	3	open wires	
KA BW12-L 3P-0500-PNP	0301507	5	open wires	

ⓘ BG stands for a connection cable with a straight female connector and BW for an angled female connector.

Technical data

Description		IN 55-S-M12
ID		0301570
Switching function		Closer
Type of switching		PNP
Switching hysterisis from the nominal switching distance		< 15%
max. switching frequency	[Hz]	3000
Product weight	[kg]	0.01
min. / max. ambient temperature	[°C]	-25/70
IP class (sensor)		67
IP class (sensor connected)		67
LED display at the sensor		yes
Type of voltage		DC
Nominal voltage	[V]	24
min. voltage	[V]	10
max. voltage	[V]	30
Voltage drop	[V]	1.5
max. switching current	[A]	0.2
Cable diameter D	[mm]	3.5
min. bending radius (dynamically)	[mm]	35
min. bending radius (statically)	[mm]	17.5
Number of wires		3
Wire cross section	[mm²]	0.14
Cable length L	[cm]	30
Cable connector/cable end		M12

IN 55 main view

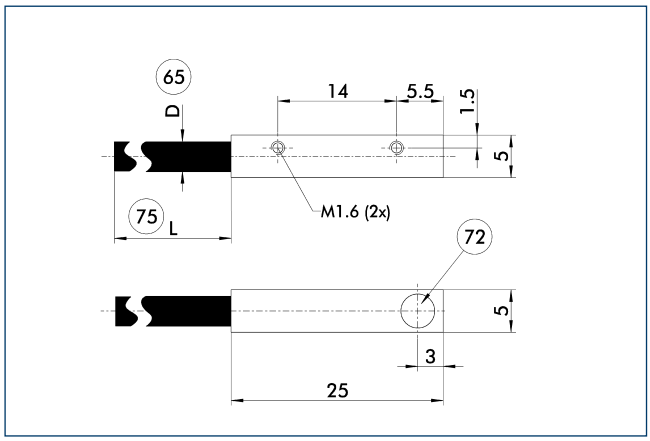

65 Cable diameter
75 Cable length
72 Active sensor surface

Wiring diagram opener PNP

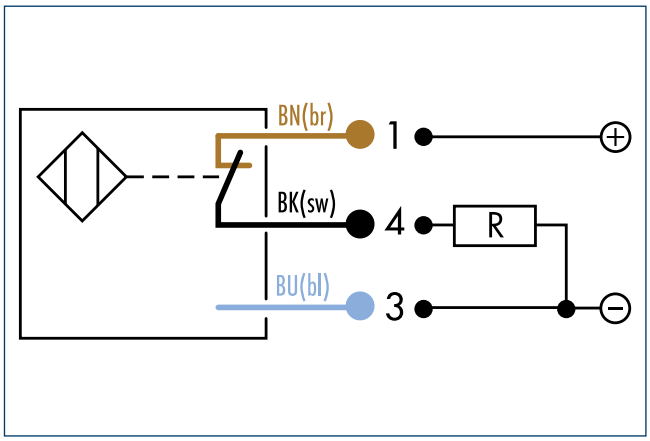

Wiring diagram closer PNP

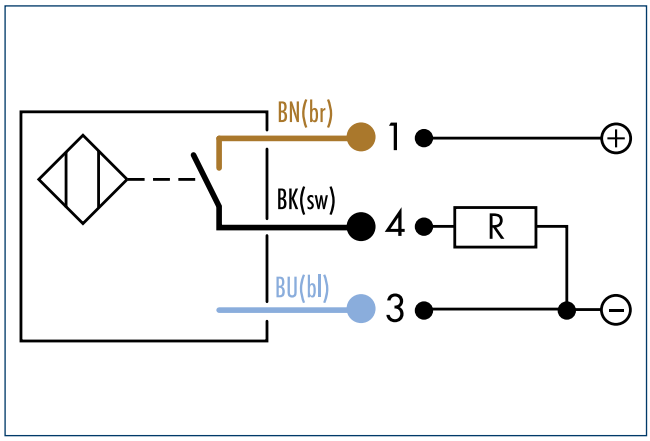

Cable connector / cable extension

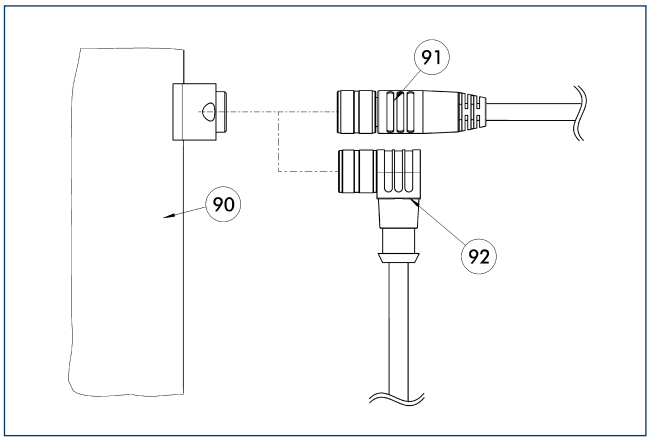

90 Connecting point for component
91 Cable with straight connection
92 Cable with angular connection

Description	ID	Length [m]	Connection electric cabinet sided
Cable extensions			
KV BG12-SG12 3P-0030-PNP	0301999	0.3	Connector
KV BG12-SG12 3P-0060-PNP	0301998	0.6	Connector
KV BW12-SG12 3P-0030-PNP	0301595	0.3	Connector
KV BW12-SG12 3P-0100-PNP	0301596	1	Connector
KV BW12-SG12 3P-0200-PNP	0301597	2	Connector
Connection cables			
KA BG12-L 3P-0500-PNP	30016369	5	open wires
KA BW12-L 3P-0300-PNP	0301503	3	open wires
KA BW12-L 3P-0500-PNP	0301507	5	open wires

ⓘ BG stands for a connection cable with a straight female connector and BW for an angled female connector.

Technical data

Description		IN 60-S-M8	IN 60-S-M12	INK 60-S
ID		0301485	0301585	0301553
Switching function		Closer	Closer	Closer
Type of switching		PNP	PNP	PNP
Switching distance	[mm]	1.5	1.5	1.5
Switching hysterisis from the nominal switching distance		< 10%	< 10%	< 10%
max. switching frequency	[Hz]	3000	3000	3000
Product weight	[kg]	0.05	0.05	0.06
min. / max. ambient temperature	[°C]	-25/70	-25/70	-25/70
IP class (sensor)		67	67	67
IP class (sensor connected)		67	67	67
LED display at the sensor		no	no	no
Type of voltage		DC	DC	DC
Nominal voltage	[V]	24	24	24
min. voltage	[V]	10	10	10
max. voltage	[V]	30	30	30
Voltage drop	[V]	1.5	1.5	1.5
max. switching current	[A]	0.2	0.2	0.2
Cable diameter D	[mm]	3.5	3.5	3.5
min. bending radius (dynamically)	[mm]	35	35	35
min. bending radius (statically)	[mm]	17.5	17.5	17.5
Number of wires		3	3	3
Wire cross section	[mm²]	0.14	0.14	0.14
Cable length L	[cm]	30	30	200
Cable connector/cable end		M8	M12	open wires

IN 60 main view

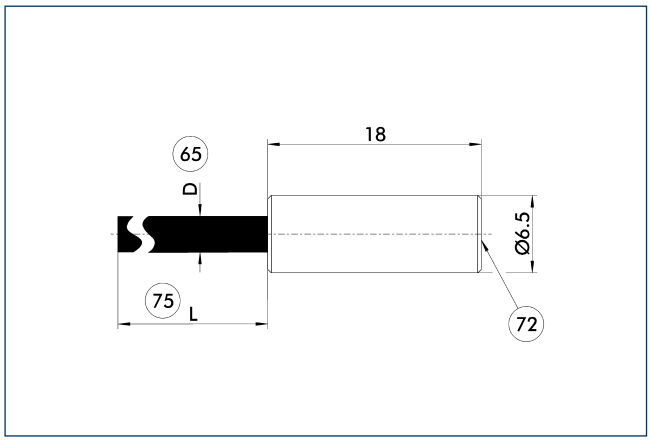

65 Cable diameter
75 Cable length
72 Active sensor surface

Wiring diagram closer PNP

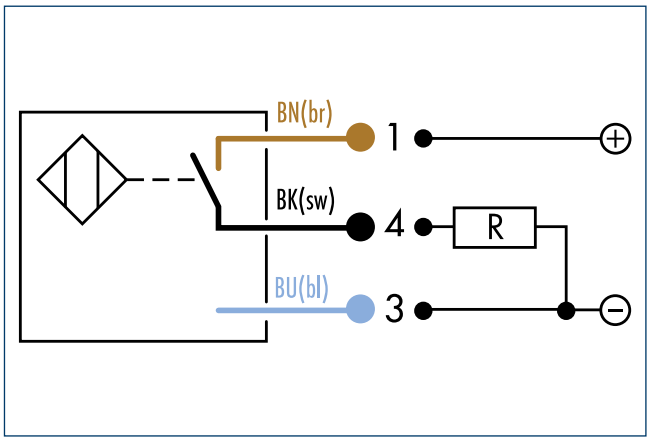

Cable connector / cable extension

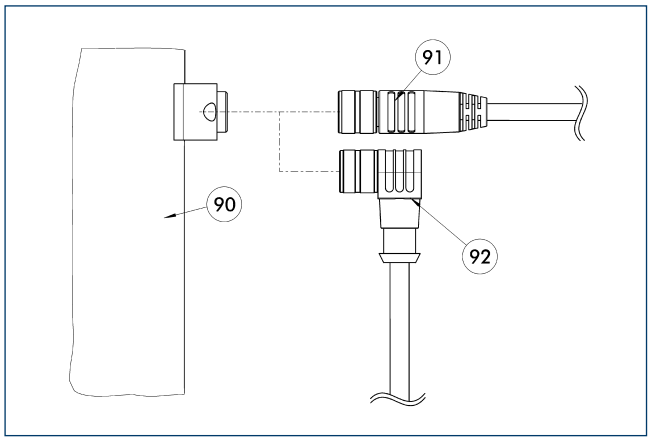

90 Connecting point for component
91 Cable with straight connection
92 Cable with angular connection

Description	ID	Length [m]	Connection electric cabinet sided	Often combined
Cable extensions				
KV BG12-SG12 3P-0030-PNP	0301999	0.3	Connector	
KV BG12-SG12 3P-0060-PNP	0301998	0.6	Connector	
KV BW08-SG08 3P-0030-PNP	0301495	0.3	Connector	
KV BW08-SG08 3P-0100-PNP	0301496	1	Connector	
KV BW08-SG08 3P-0200-PNP	0301497	2	Connector	●
KV BW12-SG12 3P-0030-PNP	0301595	0.3	Connector	
KV BW12-SG12 3P-0100-PNP	0301596	1	Connector	
KV BW12-SG12 3P-0200-PNP	0301597	2	Connector	
Connection cables				
KA BG08-L 3P-0300-PNP	0301622	3	open wires	●
KA BG08-L 3P-0500-PNP	0301623	5	open wires	
KA BG12-L 3P-0500-PNP	30016369	5	open wires	
KA BW08-L 3P-0300-PNP	0301594	3	open wires	
KA BW08-L 3P-0500-PNP	0301502	5	open wires	
KA BW12-L 3P-0300-PNP	0301503	3	open wires	
KA BW12-L 3P-0500-PNP	0301507	5	open wires	

ⓘ BG stands for a connection cable with a straight female connector and BW for an angled female connector.

Technical data

Description		IN 65-S-M8	IN 65-S-M12	INK 65-S
ID		0301476	0301576	0301554
Switching function		Closer	Closer	Closer
Type of switching		PNP	PNP	PNP
Switching distance	[mm]	1.5	1.5	1.5
Switching hysterisis from the nominal switching distance		< 10%	< 10%	< 10%
max. switching frequency	[Hz]	3000	3000	3000
Product weight	[kg]	0.05	0.07	0.05
min. / max. ambient temperature	[°C]	-25/70	-25/70	-25/70
IP class (sensor)		67	67	67
IP class (sensor connected)		67	67	67
LED display at the sensor		yes	yes	no
Type of voltage		DC	DC	DC
Nominal voltage	[V]	24	24	24
min. voltage	[V]	10	10	10
max. voltage	[V]	30	30	30
Voltage drop	[V]	1.5	1.5	1.5
max. switching current	[A]	0.2	0.2	0.2
Cable diameter D	[mm]	3.5	3.5	3.5
min. bending radius (dynamically)	[mm]	35	35	35
min. bending radius (statically)	[mm]	17.5	17.5	17.5
Number of wires		3	3	3
Wire cross section	[mm²]	0.14	0.14	0.14
Cable length L	[cm]	30	30	200
Cable connector/cable end		M8	M12	open wires

IN 65 main view

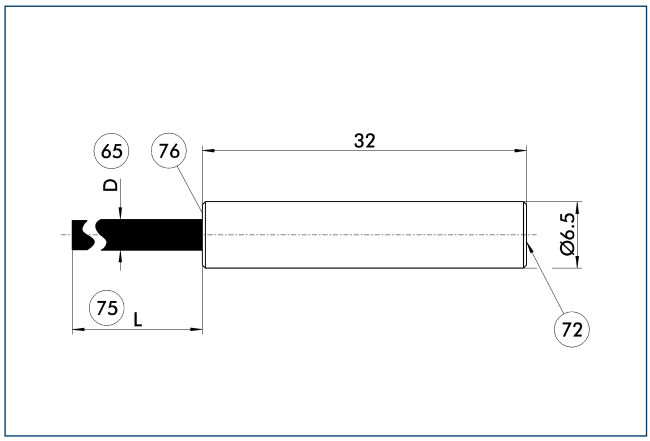

65 Cable diameter
72 Active sensor surface
75 Cable length
76 LED

Wiring diagram closer PNP

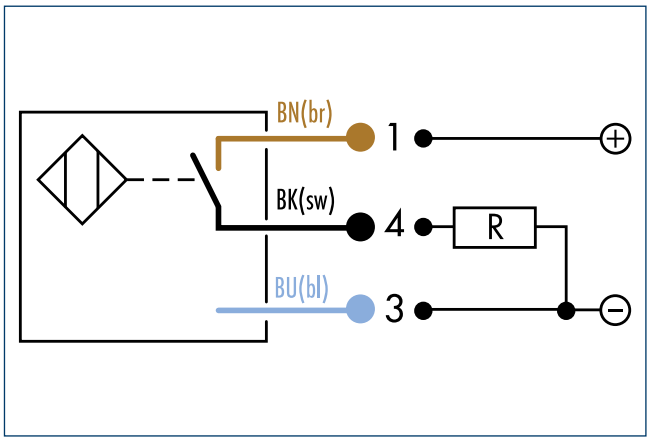

Cable connector / cable extension

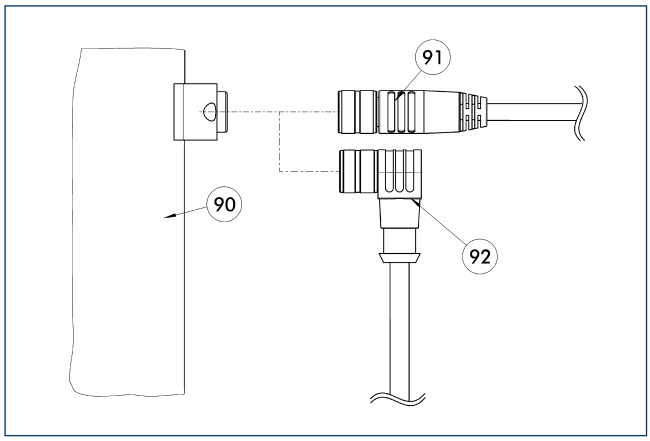

90 Connecting point for component
91 Cable with straight connection
92 Cable with angular connection

Description	ID	Length [m]	Connection electric cabinet sided	Often combined
Cable extensions				
KV BG12-SG12 3P-0030-PNP	0301999	0.3	Connector	
KV BG12-SG12 3P-0060-PNP	0301998	0.6	Connector	
KV BW08-SG08 3P-0030-PNP	0301495	0.3	Connector	
KV BW08-SG08 3P-0100-PNP	0301496	1	Connector	
KV BW08-SG08 3P-0200-PNP	0301497	2	Connector	●
KV BW12-SG12 3P-0030-PNP	0301595	0.3	Connector	
KV BW12-SG12 3P-0100-PNP	0301596	1	Connector	
KV BW12-SG12 3P-0200-PNP	0301597	2	Connector	
Connection cables				
KA BG08-L 3P-0300-PNP	0301622	3	open wires	●
KA BG08-L 3P-0500-PNP	0301623	5	open wires	
KA BG12-L 3P-0500-PNP	30016369	5	open wires	
KA BW08-L 3P-0300-PNP	0301594	3	open wires	
KA BW08-L 3P-0500-PNP	0301502	5	open wires	
KA BW12-L 3P-0300-PNP	0301503	3	open wires	
KA BW12-L 3P-0500-PNP	0301507	5	open wires	

ⓘ BG stands for a connection cable with a straight female connector and BW for an angled female connector.

Technical data

Description		IN 80-S-M8	IN 80-S-M12	INK 80-S	IN 80-O-M8	IN 80-O-M12	INK 80-O
ID		0301478	0301578	0301550	0301488	0301588	0301551
Switching function		Closer	Closer	Closer	Opener	Opener	Opener
Type of switching		PNP	PNP	PNP	PNP	PNP	PNP
Switching distance	[mm]	1.5	1.5	1.5	1.5	1.5	1.5
Switching hysterisis from the nominal switching distance		< 15%	< 15%	< 10%	< 15%	< 15%	< 10%
max. switching frequency	[Hz]	3000	3000	3000	3000	3000	3000
Product weight	[kg]	0.06	0.06	0.07	0.06	0.08	0.07
min. / max. ambient temperature	[°C]	-25/70	-25/70	-25/70	-25/70	-25/70	-25/70
IP class (sensor)		67	67	67	67	67	67
IP class (sensor connected)		67	67	67	67	67	67
LED display at the sensor		yes	yes	yes	yes	yes	yes
Type of voltage		DC	DC	DC	DC	DC	DC
Nominal voltage	[V]	24	24	24	24	24	24
min. voltage	[V]	10	10	10	10	10	10
max. voltage	[V]	30	30	30	30	30	30
Voltage drop	[V]	1.5	1.5	1.5	1.5	1.5	1.5
max. switching current	[A]	0.2	0.2	0.2	0.2	0.2	0.2
Cable diameter D	[mm]	3.5	3.5	3.5	3.5	3.5	3.5
min. bending radius (dynamically)	[mm]	35	35	35	35	35	35
min. bending radius (statically)	[mm]	17.5	17.5	17.5	17.5	17.5	17.5
Number of wires		3	3	3	3	3	3
Wire cross section	[mm²]	0.14	0.14	0.14	0.14	0.14	0.14
Cable length L	[cm]	30	30	200	30	30	200
Cable connector/cable end		M8	M12	open wires	M8	M12	open wires
Options and their characteristics							
Version with lateral cable outlet		IN 80-S-M8-SA	IN 80-S-M12-SA	INK 80-S-SA			
ID		0301483	0301587	0301566			

Description		IN 80-SL-M12	INK 80-SL	IN-B 80 S-M8	IN-B 80-S-M12	IN-C 80-S-M8
ID		0301529	0301579	0301477	0301479	0301475
Switching function		Closer	Closer	Closer	Closer	Closer
Type of switching		PNP	PNP	PNP	PNP	PNP
Switching distance	[mm]	3	3	1.5	1.5	1.5
Switching hysterisis from the nominal switching distance		< 10%	< 10%	< 15%	< 15%	< 15%
max. switching frequency	[Hz]	500	500	3000	3000	3000
Product weight	[kg]	0.03	0.09	0.02	0.02	0.01
min. / max. ambient temperature	[°C]	-25/70	-25/70	-25/70	-25/70	-25/70
IP class (sensor)		67	67	67	68	68
IP class (sensor connected)		67	67	67	68	68
LED display at the sensor		yes	yes	yes	yes	yes
Type of voltage		DC	DC	DC	DC	DC
Nominal voltage	[V]	24	24	24	24	24
min. voltage	[V]	10	10	10	10	10
max. voltage	[V]	30	30	30	30	30
Voltage drop	[V]	1.5	1.5	1.5	1.5	1.5
max. switching current	[A]	0.2	0.2	0.2	0.2	0.1
Cable diameter D	[mm]	3.5	3.5	3.5	3.5	3.5
min. bending radius (dynamically)	[mm]	35	35	35	35	35
min. bending radius (statically)	[mm]	17.5	17.5	17.5	17.5	17.5
Number of wires		3	3	3	3	3
Wire cross section	[mm²]	0.14	0.14	0.14	0.14	0.14
Cable length L	[cm]	30	200			
Cable connector/cable end		M12	open wires	M8	M12	M8

IN-C 80 main view

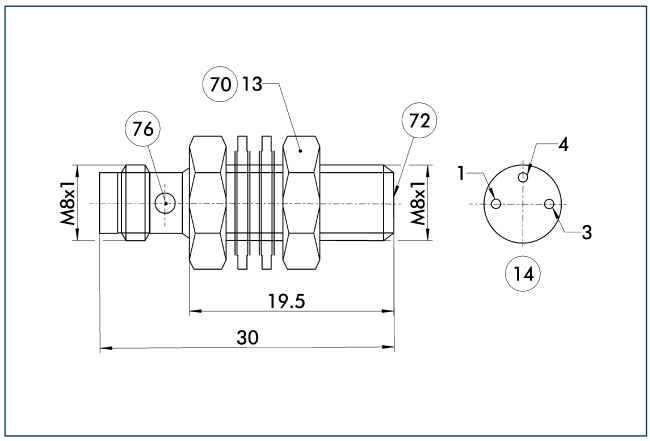

14 Connector
70 Wrench size
72 Active sensor surface
76 LED

IN-B 80 main view

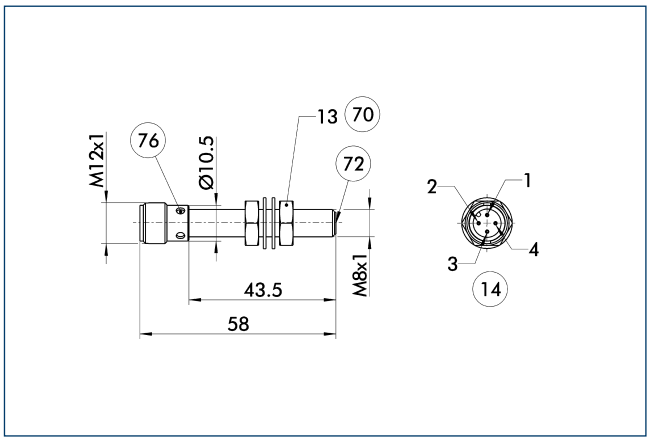

14 Connector
70 Wrench size
72 Active sensor surface
76 LED

IN 80-SL main view

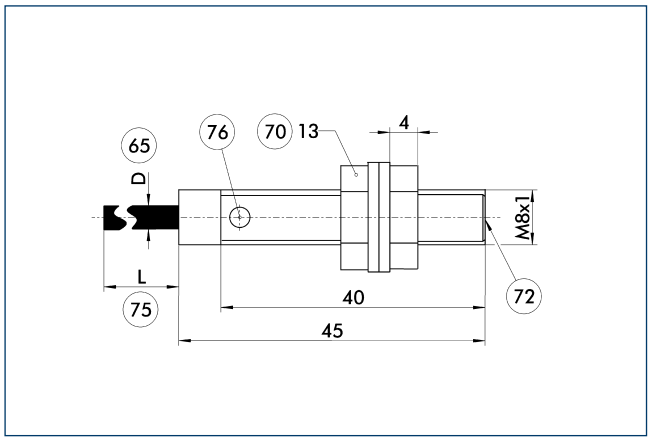

65 Cable diameter
70 Wrench size
72 Active sensor surface
75 Cable length
76 LED

IN 80 main view

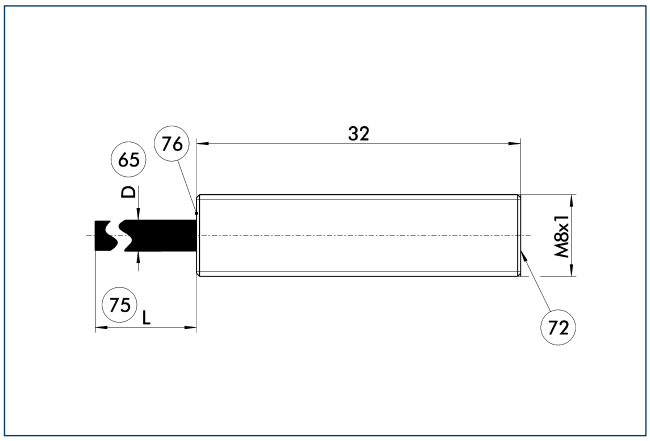

65 Cable diameter
72 Active sensor surface
75 Cable length
76 LED

Wiring diagram opener PNP

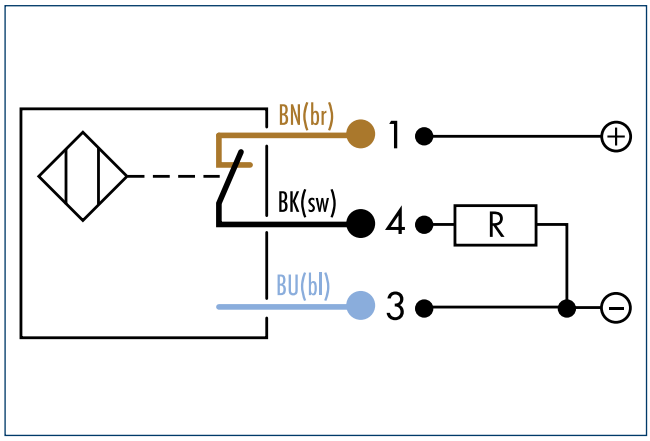

Wiring diagram closer PNP

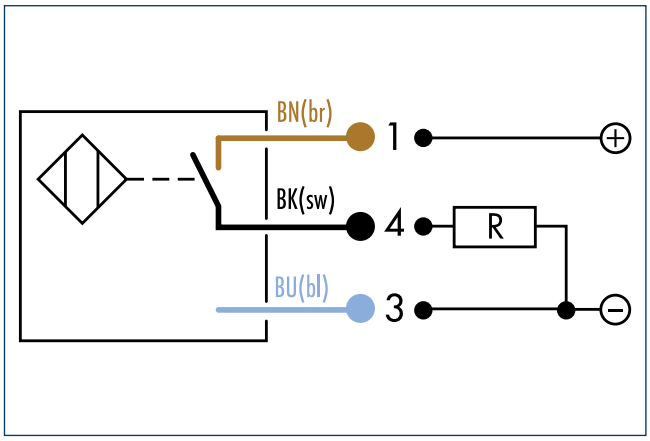

Cable connector / cable extension

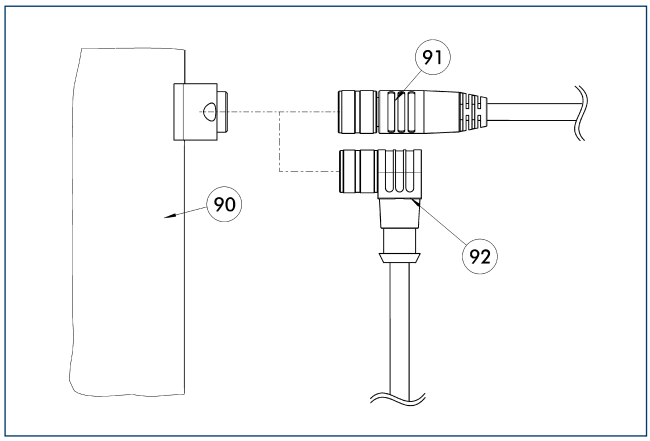

90 Connecting point for component
91 Cable with straight connection
92 Cable with angular connection

Description	ID	Length [m]	Connection electric cabinet sided	Often combined
Cable extensions				
KV BG12-SG12 3P-0030-PNP	0301999	0.3	Connector	
KV BG12-SG12 3P-0060-PNP	0301998	0.6	Connector	
KV BW08-SG08 3P-0030-PNP	0301495	0.3	Connector	
KV BW08-SG08 3P-0100-PNP	0301496	1	Connector	
KV BW08-SG08 3P-0200-PNP	0301497	2	Connector	●
KV BW12-SG12 3P-0030-PNP	0301595	0.3	Connector	
KV BW12-SG12 3P-0100-PNP	0301596	1	Connector	
KV BW12-SG12 3P-0200-PNP	0301597	2	Connector	
Connection cables				
KA BG08-L 3P-0300-PNP	0301622	3	open wires	●
KA BG08-L 3P-0500-PNP	0301623	5	open wires	
KA BG12-L 3P-0500-PNP	30016369	5	open wires	
KA BW08-L 3P-0300-PNP	0301594	3	open wires	
KA BW08-L 3P-0500-PNP	0301502	5	open wires	
KA BW12-L 3P-0300-PNP	0301503	3	open wires	
KA BW12-L 3P-0500-PNP	0301507	5	open wires	

ⓘ BG stands for a connection cable with a straight female connector and BW for an angled female connector.

Technical data

Description		IN 120-S-M12	INK 120-S
ID		0301592	0301562
Switching function		Closer	Closer
Type of switching		PNP	PNP
Switching distance	[mm]	2	2
Switching hysterisis from the nominal switching distance		< 10%	< 10%
max. switching frequency	[Hz]	800	800
Product weight	[kg]	0.07	0.13
min. / max. ambient temperature	[°C]	-25/70	-25/70
IP class (sensor)		67	67
IP class (sensor connected)		67	67
LED display at the sensor		no	no
Type of voltage		DC	DC
Nominal voltage	[V]	24	24
min. voltage	[V]	10	10
max. voltage	[V]	30	30
Voltage drop	[V]	1.5	1.5
max. switching current	[A]	0.2	0.2
Cable diameter D	[mm]	3.5	3.5
min. bending radius (dynamically)	[mm]	35	35
min. bending radius (statically)	[mm]	17.5	17.5
Number of wires		3	3
Wire cross section	[mm²]	0.14	0.14
Cable length L	[cm]	30	200
Cable connector/cable end		M12	open wires

IN 120 main view

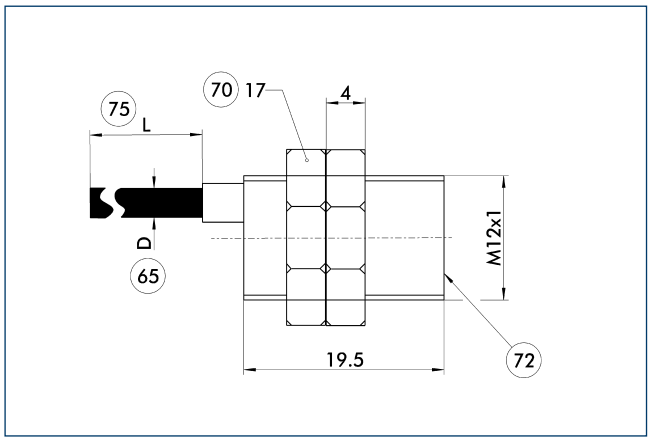

65 Cable diameter
70 Wrench size
72 Active sensor surface
75 Cable length

Wiring diagram closer PNP

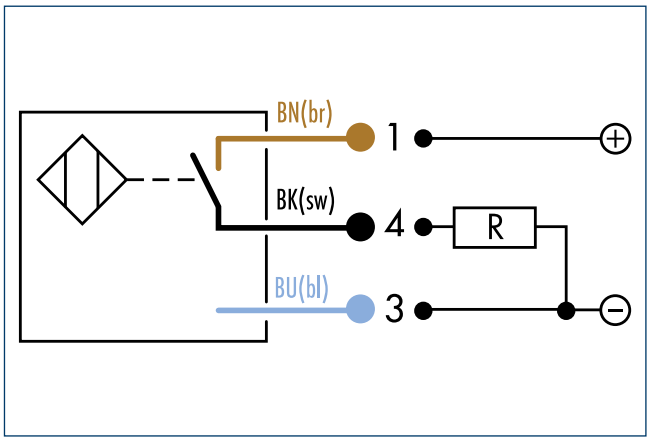

Cable connector / cable extension

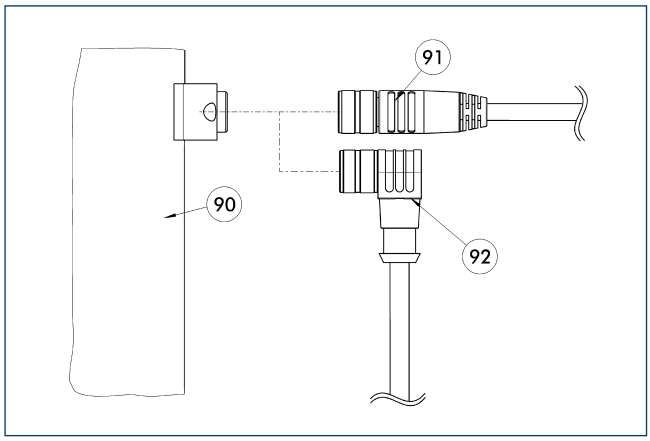

90 Connecting point for component
91 Cable with straight connection
92 Cable with angular connection

Description	ID	Length [m]	Connection electric cabinet sided
Connection cables			
KA BG12-L 3P-0500-PNP	30016369	5	open wires
KA BW12-L 3P-0300-PNP	0301503	3	open wires
KA BW12-L 3P-0500-PNP	0301507	5	open wires
Cable extensions			
KV BG12-SG12 3P-0030-PNP	0301999	0.3	Connector
KV BG12-SG12 3P-0060-PNP	0301998	0.6	Connector
KV BW12-SG12 3P-0030-PNP	0301595	0.3	Connector
KV BW12-SG12 3P-0100-PNP	0301596	1	Connector
KV BW12-SG12 3P-0200-PNP	0301597	2	Connector

ⓘ BG stands for a connection cable with a straight female connector and BW for an angled female connector.

No-Contact. Reliable. Easy assembly.

MMS Electronic Magnetic Switch

Magnetic switches are used for monitoring the position of automation components. They detect the approach of a magnet without contact, and above a certain switching threshold, enable their output

Field of Application

For use in the monitoring of gripping and rotary modules, linear modules and robot accessories. Magnetic switches from SCHUNK detect metals without contact or wear and are resistant to vibration, dust and humidity. Magnetic switches are fitted in slots and therefore do not form any additional interfering contours. For connection with a digital input module (utilization category DC-12).

Advantages – Your benefit

Installation into the sensor groove for space-saving, easy and fast assembly

Version with LED-display for checking the switching position directly at the sensor

Version with connector for fast and easy exchangeability of the extension cable

Very flexible cable in PUR-version for a long service lifetime and resistance against chemicals

Options and special Information

ATEX version EX: for explosive environments

Protection class as per DIN 40050: IP67 in plugged position for the use in clean or dusty environments or if contact with water is given. Functionability in case of contact with other mediums (coolant, acids, bases, etc.) is often given, however cannot be guaranteed by SCHUNK

Power supply: 10 – 30 V DC at < 10 % residual ripple

Sources of interference: Sensors can be influenced by other magnetic fields in the immediate vicinity. Disturbing magnetic fields can be generated by motors, electric welders, permanent magnets or magnetized material (so-called soft magnets) such as Allen keys, metal chips, etc.

Application example

① **MMS Magnetic Switch**

② **PGN-plus Universal Gripper**

③ **TCU-P Tolerance Compensation Unit**

SCHUNK offers more ...

The following components make the product MMS even more productive – the suitable addition for the highest functionality, flexibility, reliability, and controlled production.

Sensor Cables

Connector Clip

Sensor Distributor

SST Sensor Tester

ⓘ Further information regarding the products can be found on the following product pages or at www.schunk.com. Please contact us for further information: SCHUNK technical hotline +49-7133-103-2696

CAD data, operating manuals and other current product documents are available at **www.schunk.com**

Technical data

Description		MMS 22-S-M8-PNP	MMS 22-S-M8-NPN	MMSK 22-S-PNP	MMSK 22-S-NPN
ID		0301032	0301033	0301034	0301035
Switching function		Closer	Closer	Closer	Closer
Type of switching		PNP	NPN	PNP	NPN
Product weight	[kg]	0.01	0.01	0.04	0.04
min. / max. ambient temperature	[°C]	-10/70	-10/70	-10/70	-10/70
IP class (sensor)		67	67	67	67
IP class (sensor connected)		67	67	67	67
LED display at the sensor		yes	yes	yes	yes
Type of voltage		DC	DC	DC	DC
Nominal voltage	[V]	24	24	24	24
min. voltage	[V]	10	10	10	10
max. voltage	[V]	30	30	30	30
Voltage drop	[V]	2	2	2	2
max. switching current	[A]	0.005	0.005	0.005	0.005
Cable diameter D	[mm]	2.1	2.1	2.1	2.1
min. bending radius (dynamically)	[mm]	21	21	21	21
min. bending radius (statically)	[mm]	10.5	10.5	10.5	10.5
Number of wires		3	3	3	3
Wire cross section	[mm²]	0.14	0.14	0.14	0.14
Cable length L	[cm]	30	30	200	200
Cable connector/cable end		M8	M8	open wires	open wires
Options and their characteristics					
Version with lateral cable outlet		MMS 22-S-M8-PNP-SA	MMS 22-S-M8-NPN-SA	MMSK 22-S-PNP-SA	MMSK 22-S-NPN-SA
ID		0301042	0301043	0301044	0301045

MMS 22 main view

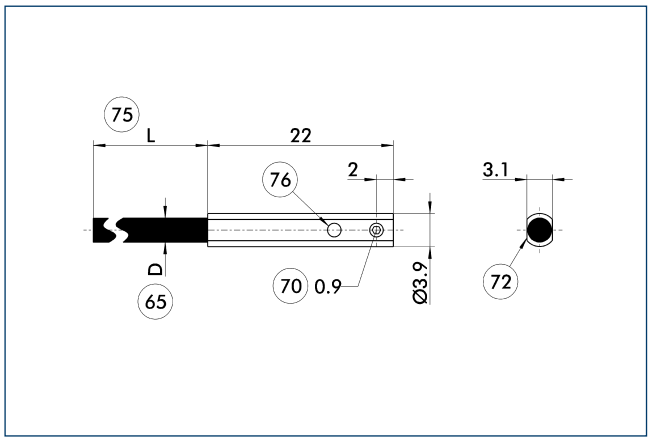

65 Cable diameter
70 Wrench size
72 Active sensor surface
75 Cable length
76 LED

MMS 22-SA main view

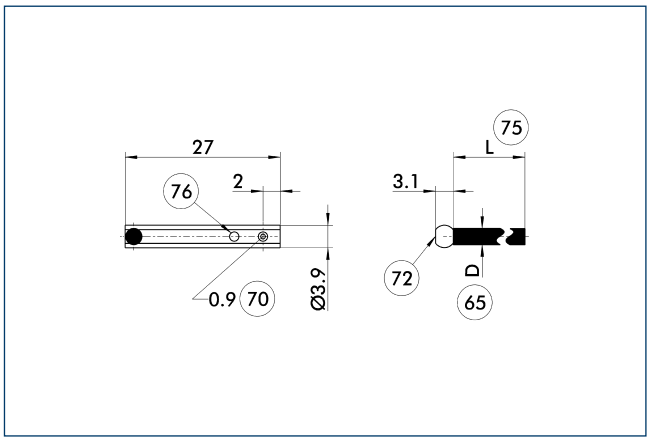

65 Cable diameter
70 Wrench size
72 Active sensor surface
75 Cable length
76 LED

Circuit diagram of NPN closer

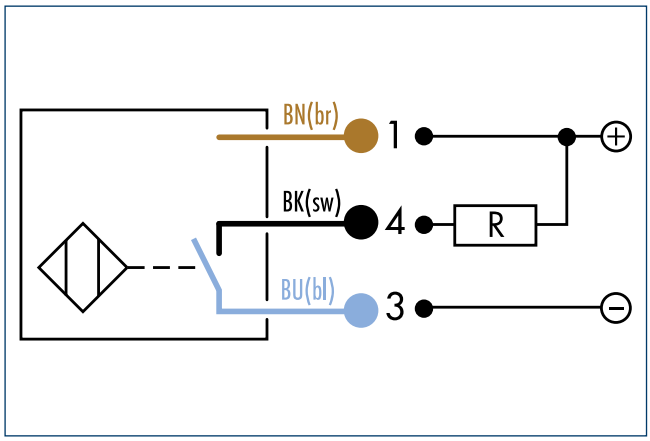

Wiring diagram closer PNP

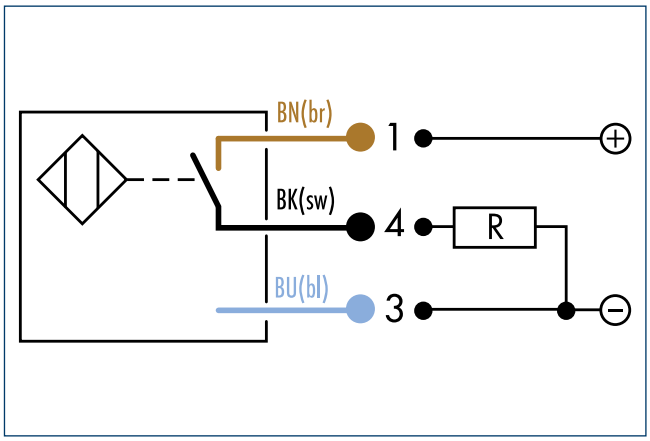

M8 connector

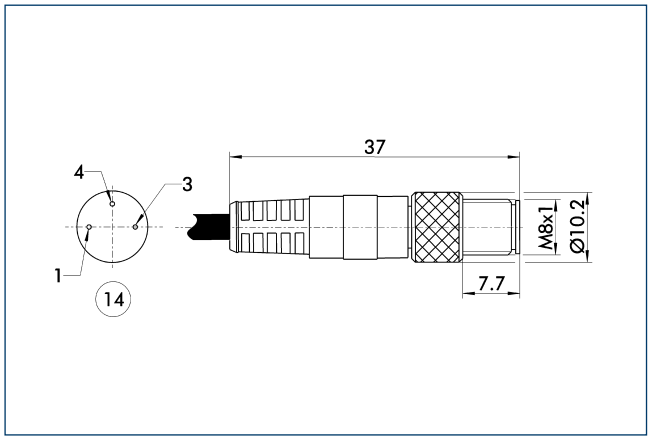

14 Connector

Cable connector / cable extension

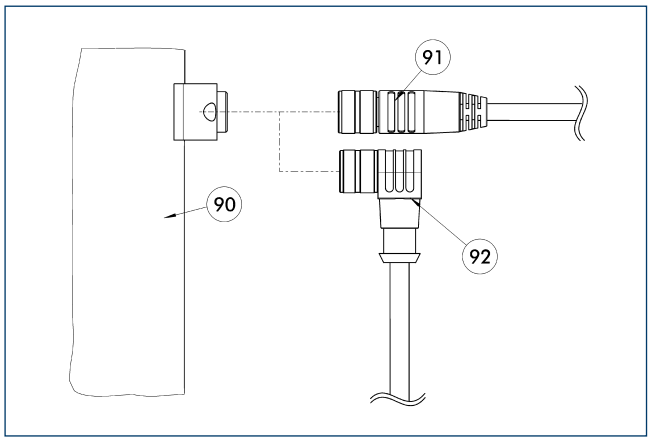

90 Connecting point for component

91 Cable with straight connection

92 Cable with angular connection

Description	ID	Length [m]	Connection electric cabinet sided	Often combined
Cable extensions				
KV BW08-SG08 3P-0030-PNP	0301495	0.3	Connector	
KV BW08-SG08 3P-0100-PNP	0301496	1	Connector	
KV BW08-SG08 3P-0200-PNP	0301497	2	Connector	●
Connection cables				
KA BG08-L 3P-0300-PNP	0301622	3	open wires	●
KA BG08-L 3P-0500-PNP	0301623	5	open wires	
KA BW08-L 3P-0300-PNP	0301594	3	open wires	
KA BW08-L 3P-0500-PNP	0301502	5	open wires	
KA BW08-L 3P-0500-NPN	9641116	5	open wires	
KA BW08-L 3P-0500-PNP	0301502	5	open wires	

ⓘ BG stands for a connection cable with a straight female connector and BW for an angled female connector.

Technical data

Description		MMS 30-S-M8-PNP	MMS 30-S-M12-PNP	MMSK 30-S-PNP
ID		0301471	0301571	0301563
Switching function		Closer	Closer	Closer
Type of switching		PNP	PNP	PNP
Product weight	[kg]	0.04	0.02	0.1
min. / max. ambient temperature	[°C]	-25/70	-25/70	-25/70
IP class (sensor)		67	67	67
IP class (sensor connected)		67	67	67
LED display at the sensor		no	no	no
Type of voltage		DC	DC	DC
Nominal voltage	[V]	24	24	24
min. voltage	[V]	10	10	10
max. voltage	[V]	30	30	30
Voltage drop	[V]	1.5	1.5	1.5
max. switching current	[A]	0.2	0.2	0.2
Cable diameter D	[mm]	3.5	3.5	3.5
min. bending radius (dynamically)	[mm]	35	35	35
min. bending radius (statically)	[mm]	17.5	17.5	17.5
Number of wires		3	3	3
Wire cross section	[mm²]	0.14	0.14	0.14
Cable length L	[cm]	30	30	200
Cable connector/cable end		M8	M12	open wires

MMS 30 main view

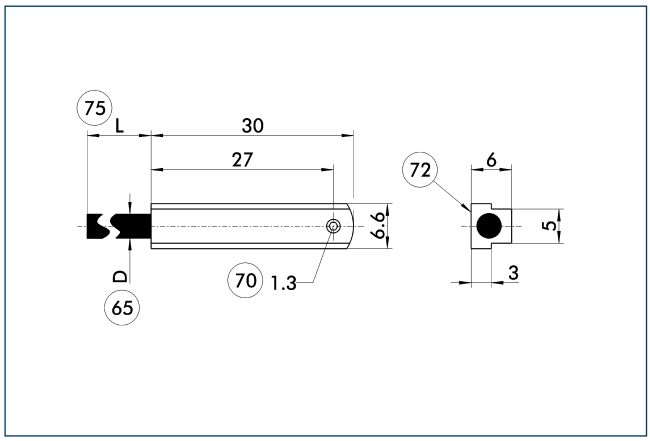

65 Cable diameter
70 Wrench size
72 Active sensor surface
75 Cable length

Wiring diagram closer PNP

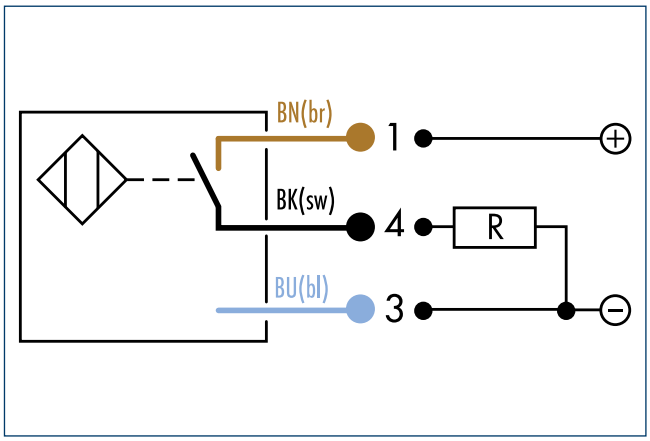

M12 connector

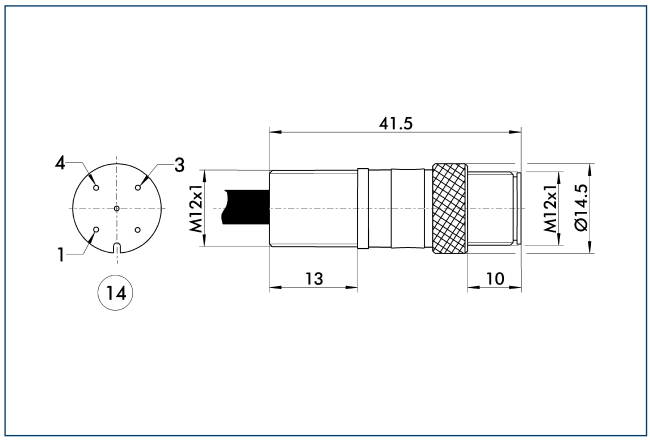

14 Connector

M8 connector

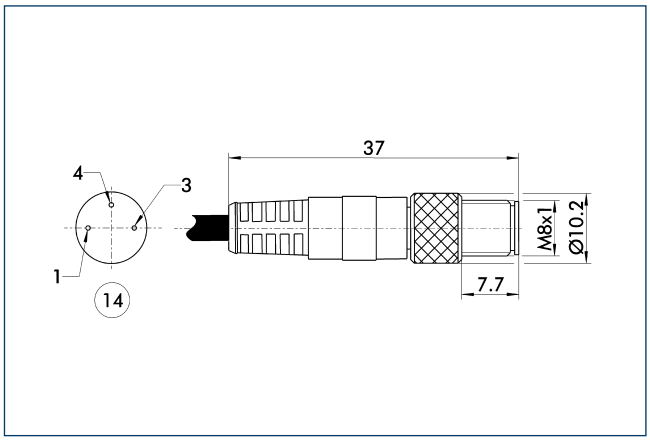

14 Connector

Cable connector / cable extension

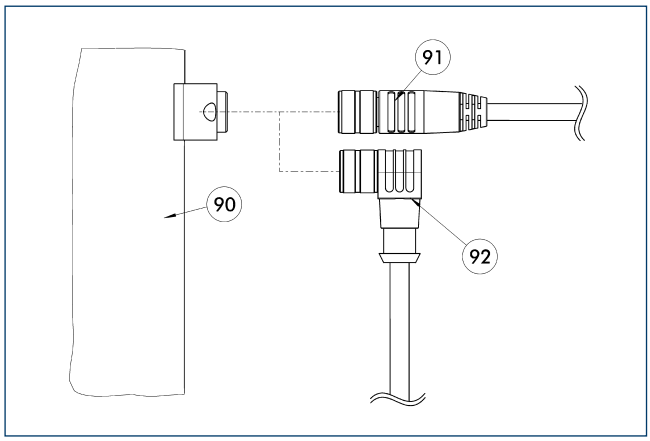

90 Connecting point for component

91 Cable with straight connection

92 Cable with angular connection

Description	ID	Length [m]	Connection electric cabinet sided	Often combined
Cable extensions				
KV BG12-SG12 3P-0030-PNP	0301999	0.3	Connector	
KV BG12-SG12 3P-0060-PNP	0301998	0.6	Connector	
KV BW08-SG08 3P-0030-PNP	0301495	0.3	Connector	
KV BW08-SG08 3P-0100-PNP	0301496	1	Connector	
KV BW08-SG08 3P-0200-PNP	0301497	2	Connector	●
KV BW12-SG12 3P-0030-PNP	0301595	0.3	Connector	
KV BW12-SG12 3P-0100-PNP	0301596	1	Connector	
KV BW12-SG12 3P-0200-PNP	0301597	2	Connector	
Connection cables				
KA BG08-L 3P-0300-PNP	0301622	3	open wires	●
KA BG08-L 3P-0500-PNP	0301623	5	open wires	
KA BG12-L 3P-0500-PNP	30016369	5	open wires	
KA BW08-L 3P-0300-PNP	0301594	3	open wires	
KA BW08-L 3P-0500-PNP	0301502	5	open wires	

ⓘ BG stands for a connection cable with a straight female connector and BW for an angled female connector.

Technical data

Description		MMS-K 65-5-PNP	MMS-K 65-5-NPN
ID		0301423	0301424
Switching function		Closer	Closer
Type of switching		PNP	NPN
min. / max. ambient temperature	[°C]	-20/70	-20/70
IP class (sensor)		67	67
IP class (sensor connected)		67	67
LED display at the sensor		no	no
Type of voltage		DC	DC
Nominal voltage	[V]	24	24
min. voltage	[V]	10	10
max. voltage	[V]	30	30
Voltage drop	[V]	1.5	1.5
max. switching current	[A]	0.2	0.2
min. bending radius (dynamically)	[mm]	21	21
min. bending radius (statically)	[mm]	10.5	10.5
Number of wires		3	3
Wire cross section	[mm²]	0.14	0.14
Cable length L	[cm]	200	200
Cable connector/cable end		open wires	open wires

MMS-K 65 main view

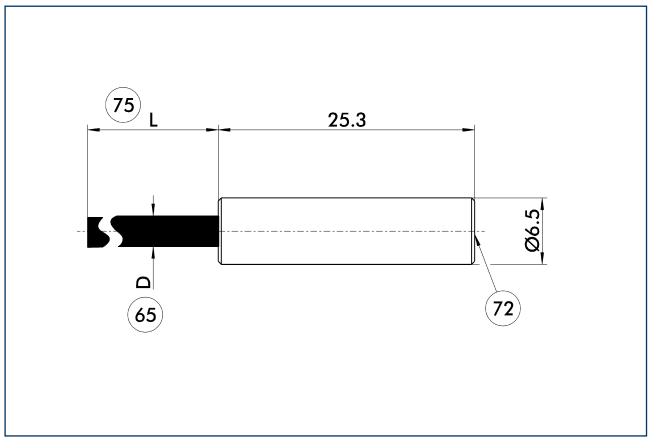

65 Cable diameter
75 Cable length
72 Active sensor surface

Circuit diagram of NPN closer

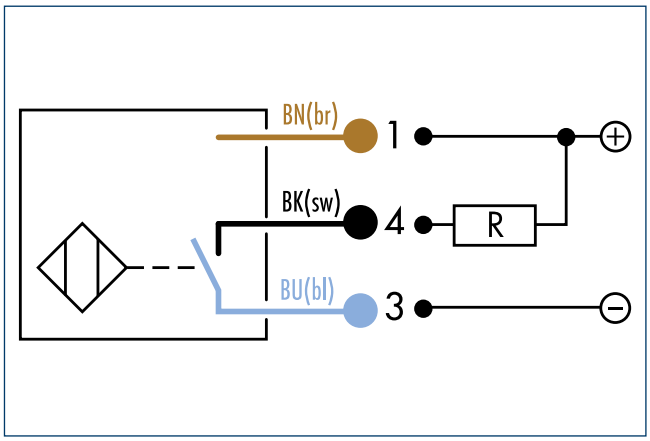

Wiring diagram closer PNP

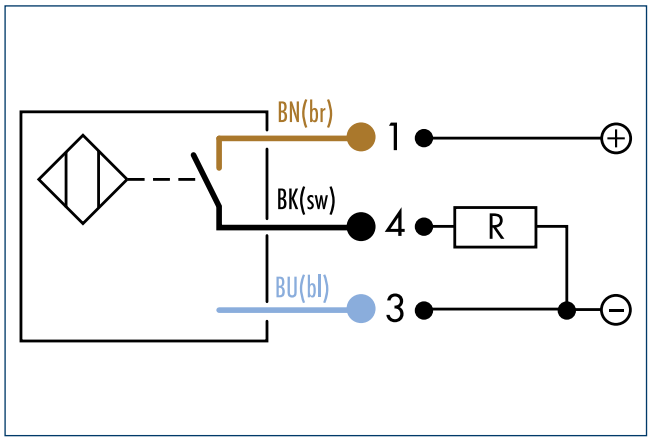

Programmable. Precise. Easy assembly.

MMS PI1 Programmable Magnetic Switch

Magnetic switches are used for monitoring the position of automation components. They detect the approach of a magnet without contact, and above a certain switching threshold, enable their output

Field of Application

For use in the monitoring of gripping and rotary modules, linear modules and robot accessories. Magnetic switches from SCHUNK detect metals without contact or wear and are resistant to vibration, dust and humidity. Magnetic switches are fitted in slots and therefore do not form any additional interfering contours. For connection with a digital input module (utilization category DC-12).

Advantages – Your benefit

Individual switching point – without interfering contours The magnetic switch can be completely inserted. Therefore there are no interfering contours due to overhanging sensors

Programmable within no time due to non-contact adjustment of the switching points and hysteresis

Adjustable hysteresis for precise position monitoring – even at very low strokes

Ideal for small spaces due to wired teaching (on option!)

Version with LED display for checking the switching position directly at the sensor

Version with connector for fast and easy exchangeability of the extension cable

Very flexible cable in PUR version for a long service lifetime and resistance against chemicals

Installation into the sensor groove for space-saving, easy and fast assembly

Options and special Information

Protection class as per DIN 40050: IP67 in plugged position for the use in clean or dusty environments or if contact with water is given. Functionability in case of contact with other mediums (coolant, acids, bases, etc.) is often given, however cannot be guaranteed by SCHUNK

Power supply: 10 – 30 V DC at < 10 % residual ripple

Sources of interference: Sensors can be influenced by other magnetic fields in the immediate vicinity. Disturbing magnetic fields can be generated by motors, electric welders, permanent magnets or magnetized material (so-called soft magnets) such as Allen keys, metal chips, etc.

Application example

① **Actuator**

② **MMS 22-PI1 C-Slot Sensor**

③ **MT No-contact Teaching Tool**

SCHUNK offers more ...

The following components make the product MMS PI1 even more productive – the suitable addition for the highest functionality, flexibility, reliability, and controlled production.

Sensor Teaching Tool

Plug Teaching Tool

Sensor Distributor

Sensor Cables

ⓘ Further information regarding the products can be found on the following product pages or at www.schunk.com. Please contact us for further information: SCHUNK technical hotline +49-7133-103-2696

CAD data, operating manuals and other current product documents are available at **www.schunk.com**

MMS PI1 22

Accessories | Sensor Systems | Programmable Magnetic Switch

Technical data

Description		MMS 22-PI1-S-M8-PNP	MMS 22-PI1-S-M8-NPN	MMSK 22-PI1-S-PNP	MMSK 22-PI1-S-NPN
ID		0301160	0301161	0301162	0301163
Switching function		Closer	Closer	Closer	Closer
Type of switching		PNP	NPN	PNP	NPN
Typical switching time	[s]	0.001	0.001	0.001	0.001
max. switching frequency	[Hz]	1000	1000	1000	1000
Product weight	[kg]	0.01	0.01	0.04	0.04
min. / max. ambient temperature	[°C]	-10/70	-10/70	-10/70	-10/70
IP class (sensor)		67	67	67	67
IP class (sensor connected)		67	67	67	67
LED display at the sensor		yes	yes	yes	yes
Type of voltage		DC	DC	DC	DC
Nominal voltage	[V]	24	24	24	24
min. voltage	[V]	10	10	10	10
max. voltage	[V]	30	30	30	30
Voltage drop	[V]	1.5	1.5	1.5	1.5
max. switching current	[A]	0.05	0.05	0.05	0.05
Cable diameter D	[mm]	2.1	2.1	2.1	2.1
min. bending radius (dynamically)	[mm]	21	21	21	21
min. bending radius (statically)	[mm]	10.5	10.5	10.5	10.5
Number of wires		3	3	3	3
Wire cross section	[mm²]	0.14	0.14	0.14	0.14
Cable length L	[cm]	30	30	200	200
Cable connector/cable end		M8	M8	open wires	open wires
Options and their characteristics					
Version with lateral cable outlet		MMS 22-PI1-S-M8-PNP-SA	MMS 22-PI1-S-M8-NPN-SA	MMSK 22-PI1-S-PNP-SA	MMSK 22-PI1-S-NPN-SA
ID		0301166	0301167	0301168	0301169
Heavy duty version		MMS 22-PI1-S-M8-PNP-HD	MMS 22-PI1-S-M8-NPN-HD	MMSK 22-PI1-S-PNP-HD	MMSK 22-PI1-S-NPN-HD
ID		0301110	0301111	0301112	0301113

MMS 22-PI1 main view

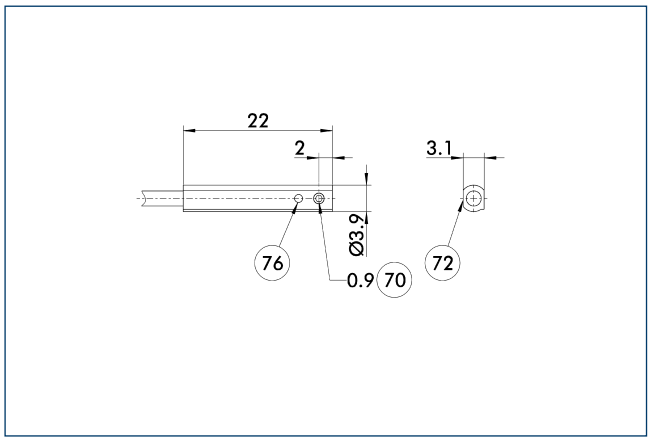

70 Wrench size
76 LED
72 Active sensor surface

MMS 22-PI1-SA main view

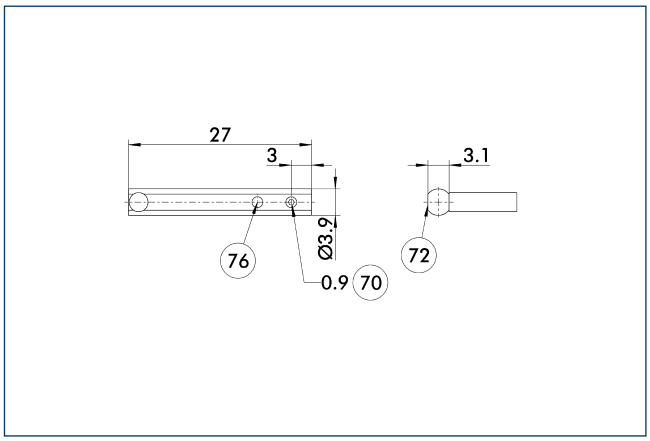

70 Wrench size
76 LED
72 Active sensor surface

MMS 22-PI1-HD main view

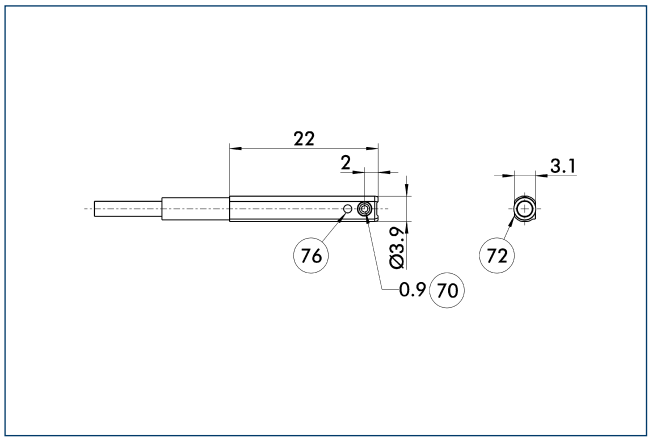

70 Wrench size
76 LED
72 Active sensor surface

M8 connector

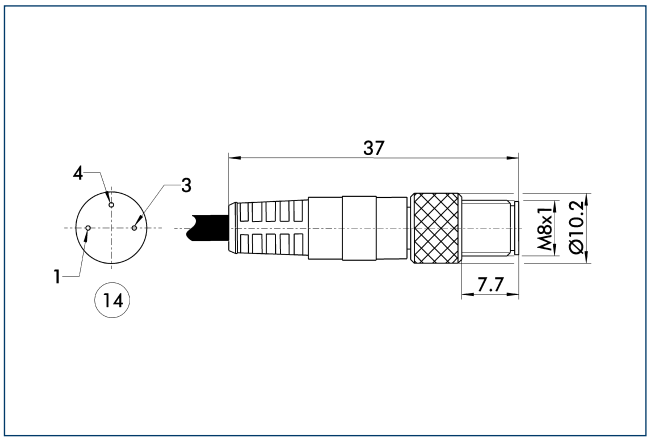

14 Connector

Wiring diagram closer PNP

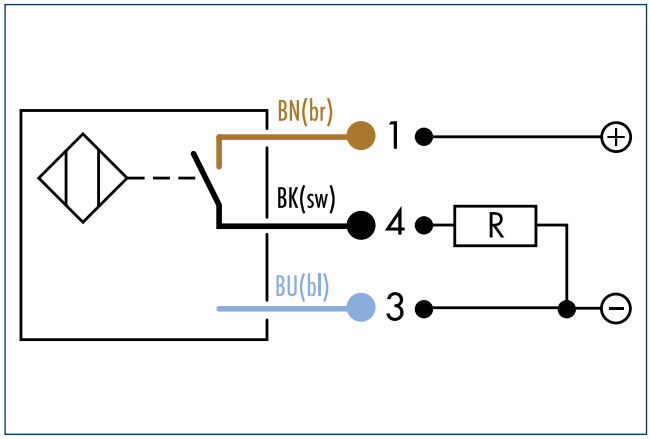

Circuit diagram of NPN closer

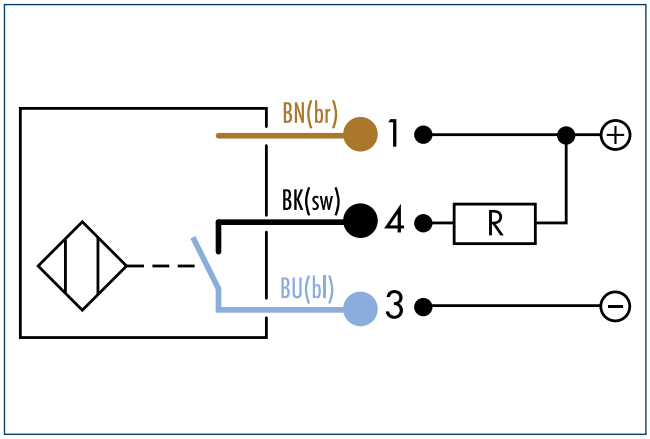

Cable connector / cable extension

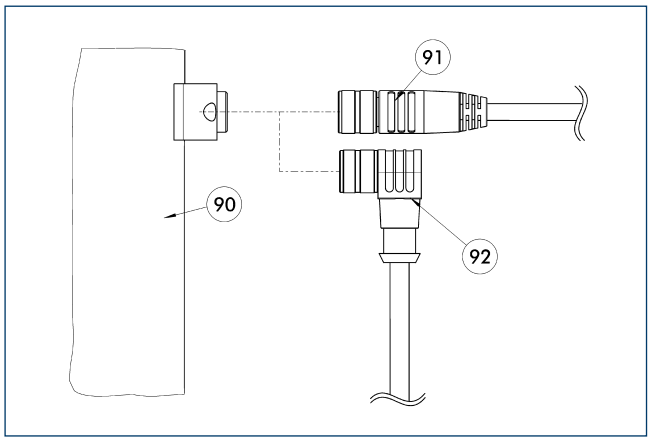

90 Connecting point for component

91 Cable with straight connection

92 Cable with angular connection

Description	ID	Length [m]	Connection electric cabinet sided	Often combined
Cable extensions				
KV BW08-SG08 3P-0030-PNP	0301495	0.3	Connector	
KV BW08-SG08 3P-0100-PNP	0301496	1	Connector	
KV BW08-SG08 3P-0200-PNP	0301497	2	Connector	●
Connection cables				
KA BG08-L 3P-0300-PNP	0301622	3	open wires	●
KA BG08-L 3P-0500-PNP	0301623	5	open wires	
KA BW08-L 3P-0300-NPN	0301602	3	open wires	
KA BW08-L 3P-0300-PNP	0301594	3	open wires	
KA BW08-L 3P-0500-NPN	9641116	5	open wires	
KA BW08-L 3P-0500-PNP	0301502	5	open wires	

ⓘ BG stands for a connection cable with a straight female connector and BW for an angled female connector.

Programmable. Precise. Easy assembly.

MMS PI2 Programmable Magnetic Switch

Magnetic switches are used for monitoring the position of automation components. They detect the approach of a magnet without contact, and above a certain switching threshold, enable their output

Field of Application

For use in the monitoring of gripping and rotary modules, linear modules and robot accessories. Magnetic switches from SCHUNK detect metals without contact or wear and are resistant to vibration, dust and humidity. Magnetic switches are fitted in slots and therefore do not form any additional interfering contours. For connection with a digital input module (utilization category DC-12).

Advantages – Your benefit

Individual switching point – without interfering contours The magnetic switch can be completely inserted. Therefore there are no interfering contours due to overhanging sensors

Programmable within no time due to non-contact adjustment of the switching points and hysteresis

Adjustable hysteresis for precise position monitoring – even at very low strokes

Ideal for small spaces due to wired teaching (on option!)

Version with LED display for checking the switching position directly at the sensor

Version with connector for fast and easy exchangeability of the extension cable

Very flexible cable in PUR version for a long service lifetime and resistance against chemicals

Installation into the sensor groove for space-saving, easy and fast assembly

Options and special Information

Protection class as per DIN 40050: IP67 in plugged position for the use in clean or dusty environments or if contact with water is given. Functionability in case of contact with other mediums (coolant, acids, bases, etc.) is often given, however cannot be guaranteed by SCHUNK

Power supply: 10 – 30 V DC at < 10 % residual ripple

Sources of interference: Sensors can be influenced by other magnetic fields in the immediate vicinity. Disturbing magnetic fields can be generated by motors, electric welders, permanent magnets or magnetized material (so-called soft magnets) such as Allen keys, metal chips, etc.

Application example

① **Actuator**

② **MMS 22-PI2 C-Slot Sensor**

③ **Cable-based Teaching Tool ST**

SCHUNK offers more ...

The following components make the product MMS PI2 even more productive – the suitable addition for the highest functionality, flexibility, reliability, and controlled production.

Sensor Teaching Tool

Plug Teaching Tool

Y Distributor

Sensor Cables

ⓘ Further information regarding the products can be found on the following product pages or at www.schunk.com. Please contact us for further information: SCHUNK technical hotline +49-7133-103-2696

CAD data, operating manuals and other current product documents are available at **www.schunk.com**

MMS PI2 22

Accessories | Sensor Systems | Programmable Magnetic Switch

Technical data

Description		MMS 22-PI2-S-M8-PNP	MMS 22-PI2-S-M8-NPN	MMSK 22-PI2-S-PNP	MMSK 22-PI2-S-NPN
ID		0301180	0301181	0301182	0301183
Switching function		Closer	Closer	Closer	Closer
Type of switching		PNP	NPN	PNP	NPN
Typical switching time	[s]	0.001	0.001	0.001	0.001
max. switching frequency	[Hz]	1000	1000	1000	1000
Product weight	[kg]	0.01	0.01	0.04	0.04
min. / max. ambient temperature	[°C]	-10/70	-10/70	-10/70	-10/70
IP class (sensor)		67	67	67	67
IP class (sensor connected)		67	67	67	67
LED display at the sensor		no	no	no	no
Type of voltage		DC	DC	DC	DC
Nominal voltage	[V]	24	24	24	24
min. voltage	[V]	10	10	10	10
max. voltage	[V]	30	30	30	30
Voltage drop	[V]	2	2	2	2
max. switching current	[A]	0.03	0.03	0.03	0.03
Cable diameter D	[mm]	2.5	2.5	2.5	2.5
min. bending radius (dynamically)	[mm]	21	21	21	21
min. bending radius (statically)	[mm]	10.5	10.5	10.5	10.5
Number of wires		4	4	4	4
Wire cross section	[mm²]	0.14	0.14	0.14	0.14
Cable length L	[cm]	30	30	200	200
Cable connector/cable end		M8	M8	open wires	open wires
Options and their characteristics					
Version with lateral cable outlet		MMS 22-PI2-S-M8-PNP-SA	MMS 22-PI2-S-M8-NPN-SA	MMSK 22-PI2-S-PNP-SA	MMSK 22-PI2-S-NPN-SA
ID		0301186	0301187	0301188	0301189
Heavy duty version		MMS 22-PI2-S-M8-PNP-HD	MMS 22-PI2-S-M8-NPN-HD	MMSK 22-PI2-S-PNP-HD	MMSK 22-PI2-S-NPN-HD
ID		0301130	0301131	0301132	0301133

MMS 22-PI2-SA main view

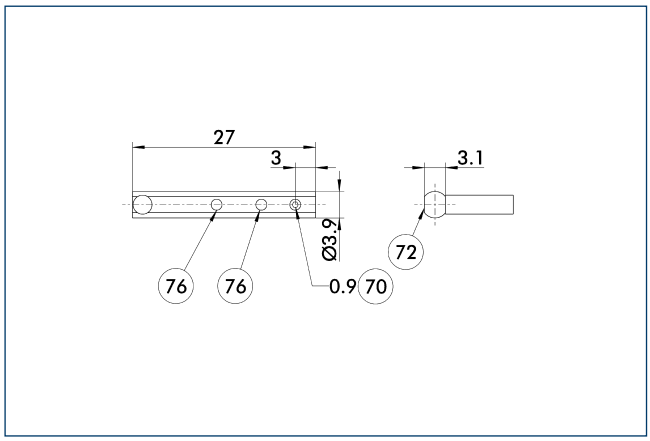

70 Wrench size
76 LED
72 Active sensor surface

MMS 22-PI2-HD main view

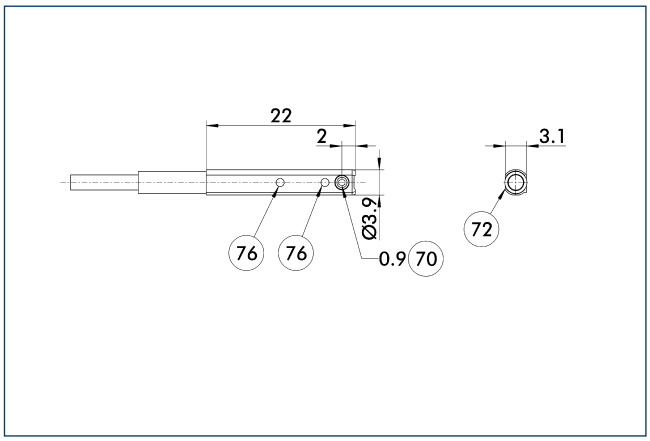

70 Wrench size
76 LED
72 Active sensor surface

MMS 22-PI2 main view

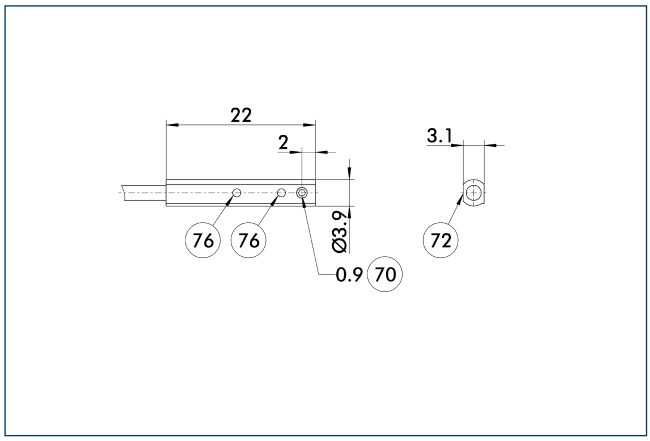

70 Wrench size
76 LED
72 Active sensor surface

M8 4PIN trapez connector

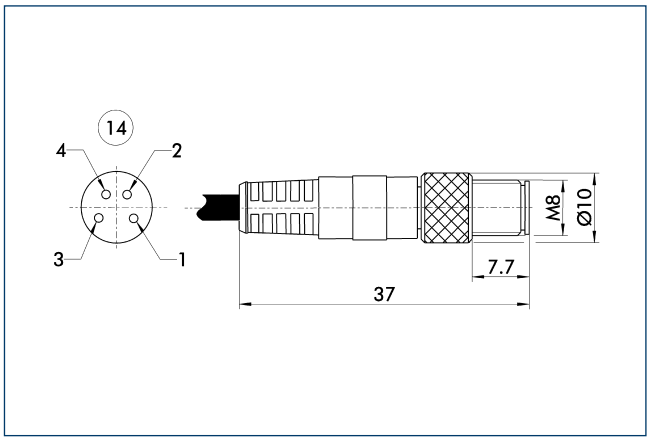

14 Connector

Wiring diagram closer PNP

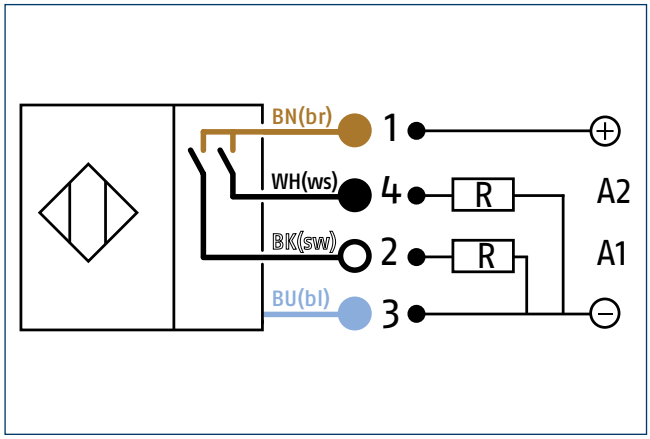

Circuit diagram of NPN closer

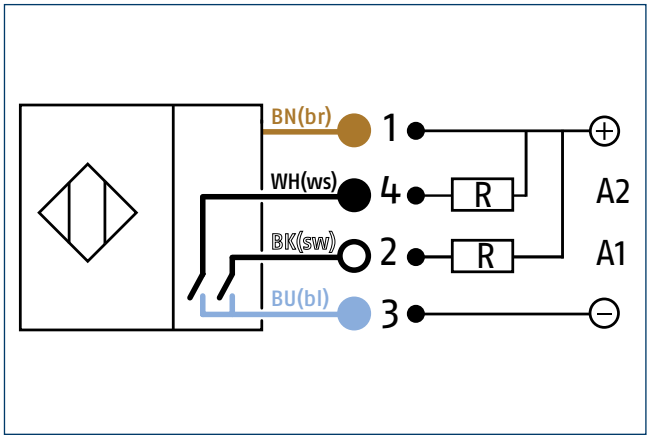

Cable connector / cable extension

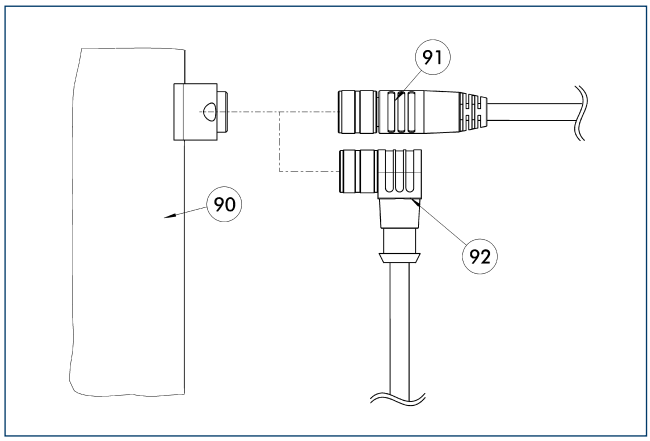

90 Connecting point for component

91 Cable with straight connection

92 Cable with angular connection

Description	ID	Length [m]	Connection electric cabinet sided	Often combined
Connection cables				
KA BG08-L 4P-0500	0307767	5	open wires	●
KA BG08-L 4P-1000	0307768	10	open wires	
KA BW08-L 4P-0500	0307765	5	open wires	
KA BW08-L 4P-1000	0307766	10	open wires	

ⓘ BG stands for a connection cable with a straight female connector and BW for an angled female connector.

Programmable. Flexible. Easy assembly.

MMS-P Programmable Magnetic Switch

Magnetic switches are used for monitoring the position of automation components. They detect the approach of a magnet without contact, and above a certain switching threshold, enable their output

Field of Application

For use in the monitoring of gripping and rotary modules, linear modules and robot accessories. Magnetic switches from SCHUNK detect metals without contact or wear and are resistant to vibration, dust and humidity. Magnetic switches are fitted in slots and therefore do not form any additional interfering contours. For connection with a digital input module (utilization category DC-12).

Advantages – Your benefit

Installation into the sensor groove for space-saving, easy and fast assembly

Very flexible cable in PUR version for a long service lifetime and resistance against chemicals

Version with connector for fast and easy exchangeability of the extension cable

A programmable C-slot switch for two switching points

Programmable switching off hysterisis for exact postions

Version with LED display for checking the switching position directly at the sensor

Options and special Information

Protection class as per DIN 40050: IP67 in plugged position for the use in clean or dusty environments or if contact with water is given. Functionability in case of contact with other mediums (coolant, acids, bases, etc.) is often given, however cannot be guaranteed by SCHUNK

Power supply: 10 – 30 V DC at < 10 % residual ripple

Sources of interference: Sensors can be influenced by other magnetic fields in the immediate vicinity. Disturbing magnetic fields can be generated by motors, electric welders, permanent magnets or magnetized material (so-called soft magnets) such as Allen keys, metal chips, etc.

Functional Description

One switch detects the two conditions "open" and "closed" – therefore the cost of one switch can be eliminated. In contrast to conventional solutions, the switching point of the sensor is taught by pushing the button at the current piston position.

If the automatically determined standard switching hysterisis should be optimized, it can be newly programmed.

① **Sensor of the MMS-P 22**

② **Electronics of the MMS-P 22**

③ **Key button for programming**

④ **Actuator with preset stop**

SCHUNK offers more ...

The following components make the product MMS-P even more productive – the suitable addition for the highest functionality, flexibility, reliability, and controlled production.

CLI Connector Clip

Sensor Cables

Sensor Distributor

SST Sensor Tester

ⓘ Further information regarding the products can be found on the following product pages or at www.schunk.com. Please contact us for further information: SCHUNK technical hotline +49-7133-103-2696

CAD data, operating manuals and other current product documents are available at **www.schunk.com**

Technical data

Description		MMS-P 22-S-M8-PNP	MMSK-P 22-S-PNP
ID		0301370	0301371
Switching function		Closer	Closer
Type of switching		PNP	PNP
Typical switching time	[s]	0.001	0.001
Product weight	[kg]	0.01	0.02
min. / max. ambient temperature	[°C]	5/55	5/55
IP class (sensor)		67	67
IP class (sensor connected)		67	67
LED display at the sensor		yes	yes
Type of voltage		DC	DC
Nominal voltage	[V]	24	24
min. voltage	[V]	12	12
max. voltage	[V]	30	30
Voltage drop	[V]	2.2	2.2
max. switching current	[A]	0.1	0.1
Cable diameter D	[mm]	2.6	2.6
min. bending radius (dynamically)	[mm]	39	39
min. bending radius (statically)	[mm]	26	26
Number of wires		4	4
Wire cross section	[mm²]	0.08	0.08
Cable length L	[cm]	60	200
Cable connector/cable end		M8	open wires

MMS-P main view

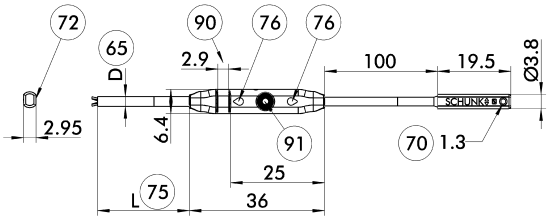

65 Cable diameter
70 Wrench size
72 Active sensor surface
75 Cable length
76 LED
90 Rib for cable connector
91 Key button

Wiring diagram closer PNP

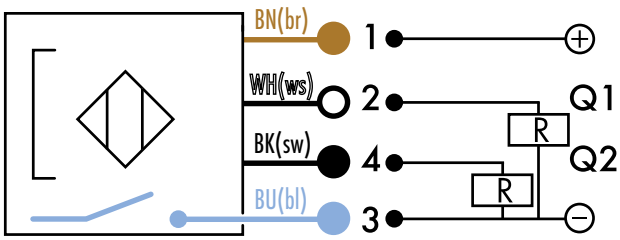

M8 4PIN trapez connector

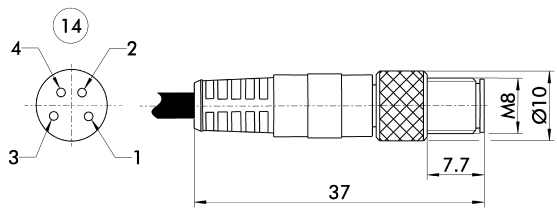

14 Connector

Cable connector / cable extension

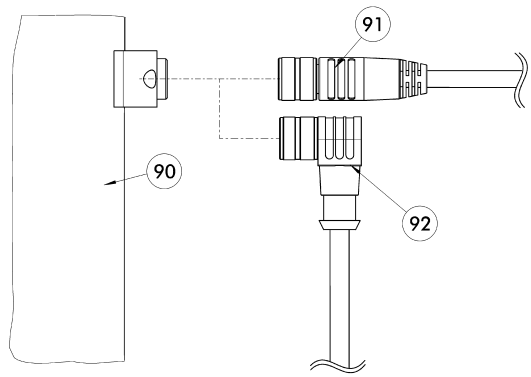

90 Connecting point for component
91 Cable with straight connection
92 Cable with angular connection

Description	ID	Length [m]	Connection electric cabinet sided	Often combined
Connection cables				
KA BG08-L 4P-0500	0307767	5	open wires	●
KA BG08-L 4P-1000	0307768	10	open wires	
KA BW08-L 4P-0500	0307765	5	open wires	
KA BW08-L 4P-1000	0307766	10	open wires	

ⓘ BG stands for a connection cable with a straight female connector and BW for an angled female connector.

Cost effective. No-Contact. Easy assembly.

RMS Reed Switch

Reed switches are mechanical switches that react to the presence of magnetic fields (magnets). They are frequently used as a cost-effective alternative to electronic magnetic switches (MMS)

Field of Application

Used for monitoring gripping and rotary modules, as well as linear modules and robot accessories. SCHUNK reed switches detect the presence of metal without contact and wear and are not susceptible to dust and moisture. Magnetic switches are installed in slots and thus do not produce any additional interfering contours. Note that not all SCHUNK products that have a sensor slot can be monitored with low-priced RMS reed switches. For connection with a digital input module (utilization category DC-12).

Advantages – Your benefit

Attractively priced for cost-effective applications

Installation into the sensor groove easy and fast assembly and to save space

Version with connector for fast and easy exchange of the extension cable

Very flexible cable in PUR version for a long service lifetime and resistance against many chemicals

Options and special Information

Sources of interference: Sensors can be influenced by other magnetic fields in the immediate vicinity. Disturbing magnetic fields can be generated by motors, electric welders, permanent magnets or magnetized material (so-called soft magnets) such as Allen keys, metal chips, etc.

Application example

① RMS 22 Reed Switch in the Sensor Slot of the PGN-plus 2-Finger Parallel Gripper

② RSS-T2 Transmitter Module

③ RSS-R-A Magnetic Base Antenna

④ RSS-R1 Receiver

SCHUNK offers more ...

The following components make the product RMS even more productive – the suitable addition for the highest functionality, flexibility, reliability, and controlled production.

Sensor Distributor

Sensor Cables

RSS Radio Sensor System

SST Sensor Tester

ⓘ Further information regarding the products can be found on the following product pages or at www.schunk.com. Please contact us for further information: SCHUNK technical hotline +49-7133-103-2696

CAD data, operating manuals and other current product documents are available at **www.schunk.com**

Technical data

Description		RMS 22-S-M8
ID		0377720
Switching function		Closer
Product weight	[kg]	0.01
min. / max. ambient temperature	[°C]	-5/70
IP class (sensor)		67
IP class (sensor connected)		67
LED display at the sensor		no
Type of voltage		DC/AC
Nominal voltage	[V]	24
min. voltage	[V]	10
max. voltage	[V]	120
max. switching current	[A]	0.4
Cable diameter D	[mm]	2.1
min. bending radius (dynamically)	[mm]	21
min. bending radius (statically)	[mm]	10.5
Number of wires		2
Wire cross section	[mm²]	0.14
Cable length L	[cm]	30
Cable connector/cable end		M8

RMS 22 main view

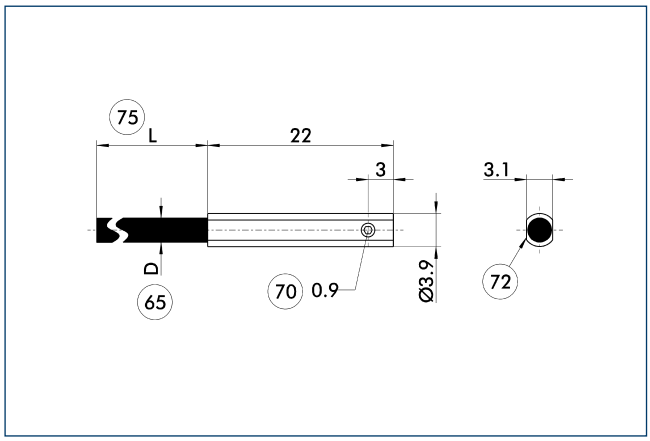

65 Cable diameter
70 Wrench size
72 Active sensor surface
75 Cable length

M8 connector

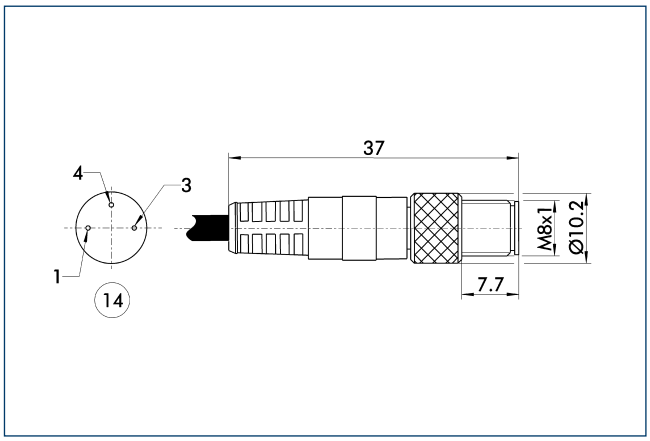

14 Connector

Cable connector / cable extension

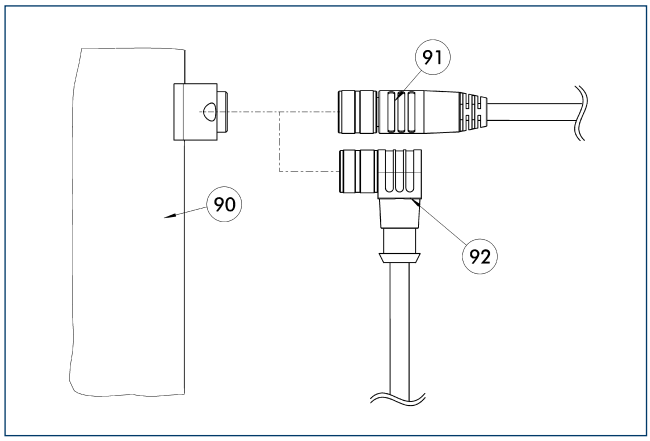

90 Connecting point for component
91 Cable with straight connection
92 Cable with angular connection

Description	ID	Length [m]	Connection electric cabinet sided	Often combined
Cable extensions				
KV BW08-SG08 3P-0030-PNP	0301495	0.3	Connector	
KV BW08-SG08 3P-0100-PNP	0301496	1	Connector	
KV BW08-SG08 3P-0200-PNP	0301497	2	Connector	●
Connection cables				
KA BG08-L 3P-0300-PNP	0301622	3	open wires	●
KA BG08-L 3P-0500-PNP	0301623	5	open wires	
KA BW08-L 3P-0300-PNP	0301594	3	open wires	
KA BW08-L 3P-0500-PNP	0301502	5	open wires	

ⓘ BG stands for a connection cable with a straight female connector and BW for an angled female connector.

Technical data

Description		RMS 80-S-M8
ID		0377721
Switching function		Closer
Product weight	[kg]	0.01
min. / max. ambient temperature	[°C]	-5/70
IP class (sensor)		67
IP class (sensor connected)		67
LED display at the sensor		no
Type of voltage		DC/AC
Nominal voltage	[V]	24
min. voltage	[V]	10
max. voltage	[V]	120
max. switching current	[A]	0.4
Cable diameter D	[mm]	2.1
min. bending radius (dynamically)	[mm]	21
min. bending radius (statically)	[mm]	10.5
Number of wires		2
Wire cross section	[mm²]	0.14
Cable length L	[cm]	30
Cable connector/cable end		M8

RMS 80 main view

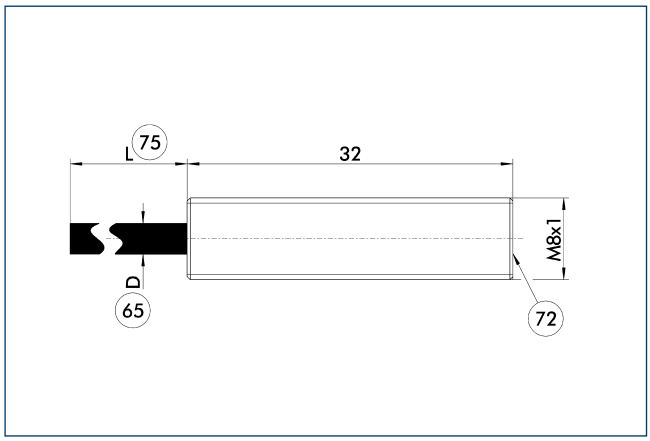

65 Cable diameter
75 Cable length
72 Active sensor surface

M8 connector

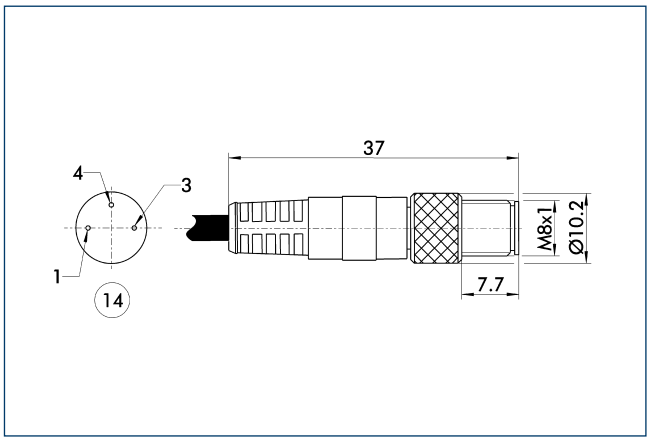

14 Connector

Cable connector / cable extension

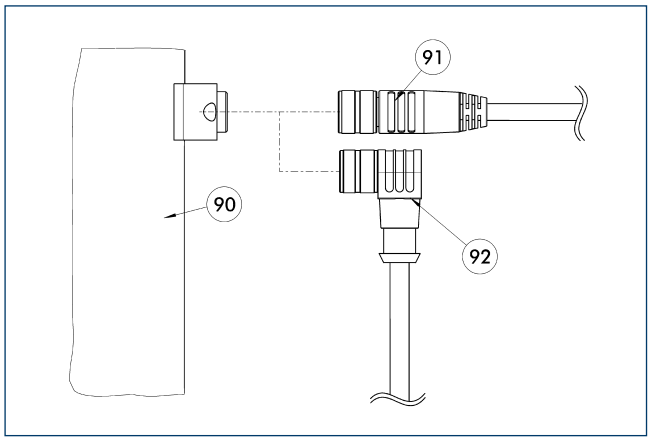

90 Connecting point for component
91 Cable with straight connection
92 Cable with angular connection

Description	ID	Length [m]	Connection electric cabinet sided	Often combined
Cable extensions				
KV BW08-SG08 3P-0030-PNP	0301495	0.3	Connector	
KV BW08-SG08 3P-0100-PNP	0301496	1	Connector	
KV BW08-SG08 3P-0200-PNP	0301497	2	Connector	●
Connection cables				
KA BG08-L 3P-0300-PNP	0301622	3	open wires	●
KA BG08-L 3P-0500-PNP	0301623	5	open wires	
KA BW08-L 3P-0300-PNP	0301594	3	open wires	
KA BW08-L 3P-0500-PNP	0301502	5	open wires	

ⓘ BG stands for a connection cable with a straight female connector and BW for an angled female connector.

No-Contact. Easy. Flexible.

OAS Optical Distance Sensor

The optical distance and presence sensor for direct attachment to the SCHUNK MPG-plus and PGN-plus grippers detects the presence of a workpiece, and the distance between gripper and workpiece

Field of Application

Use in clean environments

Advantages – Your benefit

Time saving by "on-the-fly" testing, decentrally on the gripper

Reliable production by permanent detection of the workpiece during the entire tooling and handling process

Flexible by selective evaluation units with analog or digital output

Ingeniously simple due to the evaluation units, the teached switching points can be directly processed.

Maximum transparency by evaluation units with display

Options and special Information

Impressive optics with a high range

Sources of interference: Optical sensors have a strong influence on the differently reflecting surfaces. Therefore the distance measurement is only possilbe, if the workpieces have the same reflective properties.

Output signal: On option, one analog or one digital evaluation electronics is available.

Application example

① **OAS Optical Distance Sensor**

② **OAS-V10-D Electronic Processor**

③ **MPG-plus 2-Finger Parallel Gripper**

SCHUNK offers more ...

The following components make the product OAS even more productive – the suitable addition for the highest functionality, flexibility, reliability, and controlled production.

MPG-plus Pneumatic Small Parts Gripper

PGN-plus 2-Finger Parallel Gripper

Cable Connector

KA Connection Cable

ⓘ Further information regarding the products can be found on the following product pages or at www.schunk.com. Please contact us for further information: SCHUNK technical hotline +49-7133-103-2696

CAD data, operating manuals and other current product documents are available at **www.schunk.com**

Technical data

Description		OAS-V10-A	OAS-V10-D	OAS-V09-D
ID		0308867	0308866	0308865
Type of voltage		DC	DC	DC
min. voltage	[V]	15	10	10
max. voltage	[V]	30	30	30
Nominal current	[A]	45	45	40
max. power supply	[mA]	180	180	180
min./ max. output current	[A]		0/200	0/100
min./ max. output voltage	[V]	0/10		
min. / max. ambient temperature	[°C]	-10/55	-10/55	-10/55
IP class		65	65	65
Weight	[g]	60	65	55

ⓘ When using an OAS system, one each OAS sensor and an OAS evaluation unit with analog and digital outbput per gripper are required. Information on the matching sensor can be found in the relevant gripper chapter.

Electronic processor

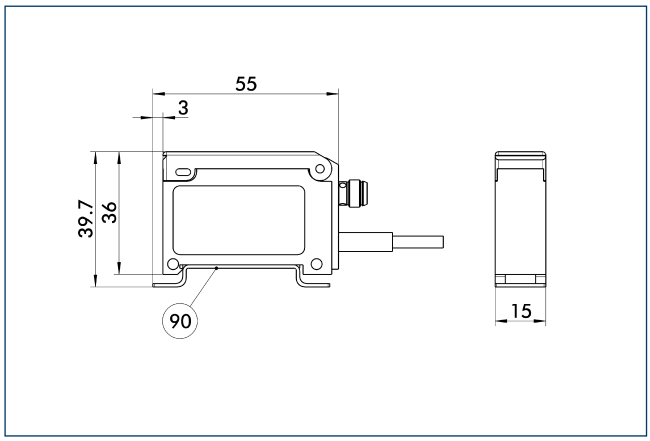

(90) Groove for mounting rail

The drawing shows every version of the unit (analog-A, digital-D).

Precise. Flexible. Reliable.

APS-Z80 Analog Position Sensor

The contact-free analog sensor ensures exact record of the gripper jaws position

Field of Application

For the precise measurement of the gripper jaw position in clean environments

Advantages – Your benefit

Analog multi position monitoring for any desired positions for flexibility in all automation solutions

Precise measuring system for reliable part handling in compact machines

Compact design for space-saving handling without interfering contours

CE compliant for long life during permanent operation

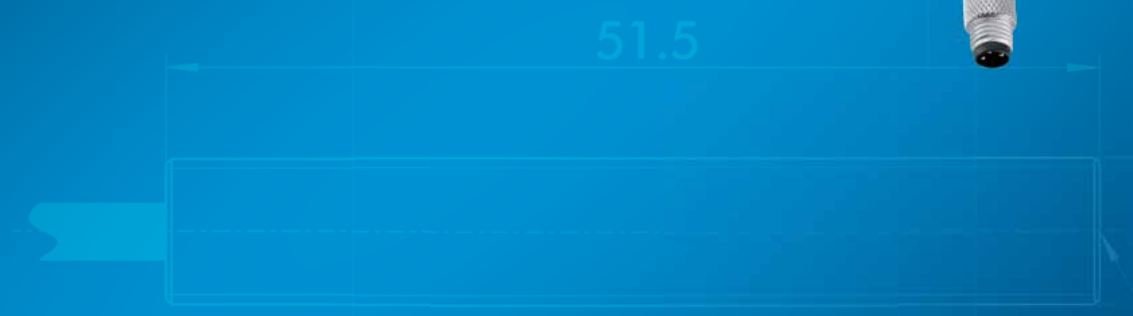

Options and special Information

Warranty: 24 months (details, general terms and conditions and operating manuals can be downloaded at www.schunk.com)

Attachment sets: For the APS system one attachment set is required per gripper. The matching attachment set is indicated for every gripper size.

Application example

① **APS-Z80 Analog Position Sensor**

② **PGN-plus 2-Finger Parallel Gripper**

③ **TCU-P Tolerance Compensation Unit**

SCHUNK offers more ...

The following components make the product APS-Z80 even more productive – the suitable addition for the highest functionality, flexibility, reliability, and controlled production.

PGN-plus 2-Finger Parallel Gripper

PZN-plus 3-Finger Centric Gripper

KA Connection Cable

Sensor Distributor

ⓘ Further information regarding the products can be found on the following product pages or at www.schunk.com. Please contact us for further information: SCHUNK technical hotline +49-7133-103-2696

CAD data, operating manuals and other current product documents are available at **www.schunk.com**

APS-Z80 Sensor

Accessories | Sensor Systems | Analog Position Sensor

Technical data

Description		APS-Z80-M8
ID		0302070
Measuring stroke	[mm]	1
Nominal voltage	[V]	24
min. voltage	[V]	15
max. voltage	[V]	30
min./ max. output voltage	[V]	0/10
Nominal current	[mA]	8
IP class		67
min. / max. ambient temperature	[°C]	-10/70
Cable length	[m]	0.3

ⓘ When using an APS-Z-80 system, for each gripper a mounting kit AS-APS-Z80 and an APS-Z80 sensor are required. The analog output signal can be connected directly to the PLC.

Main view

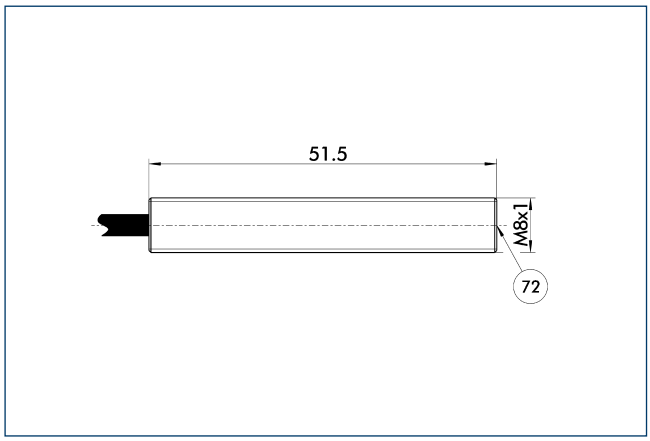

72 Active sensor surface

The drawing shows the basic version of the sensor.

M8 connector

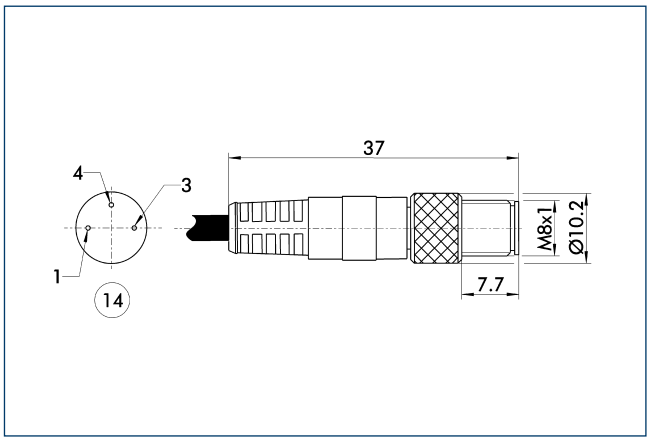

14 Connector

Cable connector / cable extension

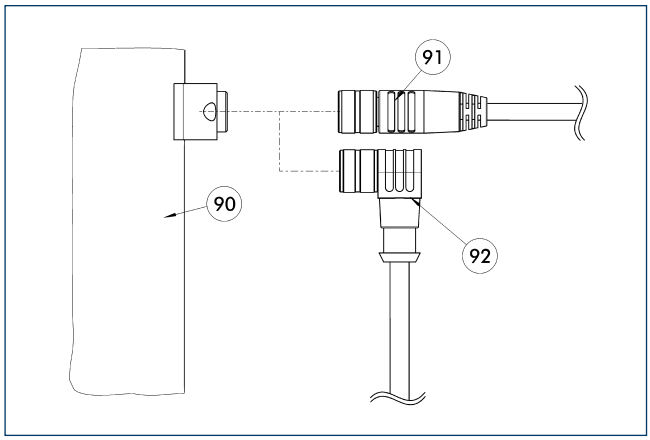

90 Connecting point for component

91 Cable with straight connection

92 Cable with angular connection

Description	ID	Length [m]
Sensor		
APS-Z80-K	0302072	0.3

ⓘ BG stands for a connection cable with a straight female connector and BW for an angled female connector.

Precise. Flexible. Reliable.

APS-M1 Analog Position Sensor

The mechanical analog sensor ensures accurate recording of the gripper jaws postion

Field of Application

For the precise measurement of the gripper jaw position in clean environments

Advantages – Your benefit

Analog multi position monitoring for any desired positions for flexibility in all automation solutions

Precise measuring system also for long strokes

Compact design for space-saving installation in any control cabinet

CE compliant for long life during permanent operation

Options and special Information

Warranty: 24 months (details, general terms and conditions and operating manuals can be downloaded at www.schunk.com)

Attachment sets: For the APS system one attachment set is required per gripper. The matching attachment set is indicated for every gripper size.

Order: Sensor and evaluation electronics must be ordered separately.

Application example

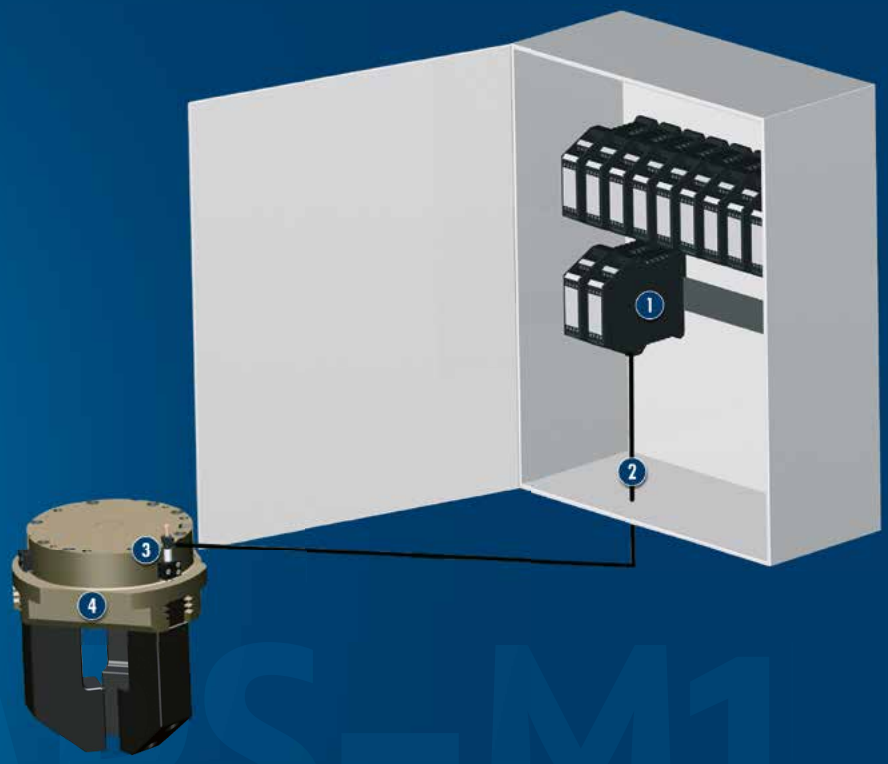

① **APS-M1E Processor**

② **APS-K7 Extension Cable**

③ **APS-M1S Sensor**

④ **PZN-plus 100 3-Finger Centric Gripper**

SCHUNK offers more ...

The following components make the product APS-M1 even more productive – the suitable addition for the highest functionality, flexibility, reliability, and controlled production.

PGN-plus 2-Finger Parallel Gripper

PZN-plus 3-Finger Centric Gripper

KST Cable Connector

KA Connection Cable

ⓘ Further information regarding the products can be found on the following product pages or at www.schunk.com. Please contact us for further information: SCHUNK technical hotline +49-7133-103-2696

CAD data, operating manuals and other current product documents are available at **www.schunk.com**

APS-M1 M1

Accessories | Sensor Systems | Analog Position Sensor

Technical data

Description		APS-M1S
ID		0302062
Measuring stroke	[mm]	2
Measuring accuracy	[mm]	0.004
Nominal current	[A]	0.023
IP class		67
Temperature drift zero signal	[%/10K]	0.1
Thermal drift of amplification factor	[%/10K]	0.2
min. / max. ambient temperature	[°C]	10/60
Weight	[kg]	0.16
Technical data		
Description		APS-M1E
ID		0302064
Supply voltage		DC
Nominal voltage	[V]	24
min. voltage	[V]	22
max. voltage	[V]	26
Nominal current	[A]	0.1
IP class		20
min. / max. ambient temperature	[°C]	0/60
Repeat accuracy (sensor and processor)	[%]	0.3
Weight	[kg]	0.16
Housing material		PA
Output signal		0..10 V DC / 4..20 mA
Mounting		Top-hat rail

APS sensor

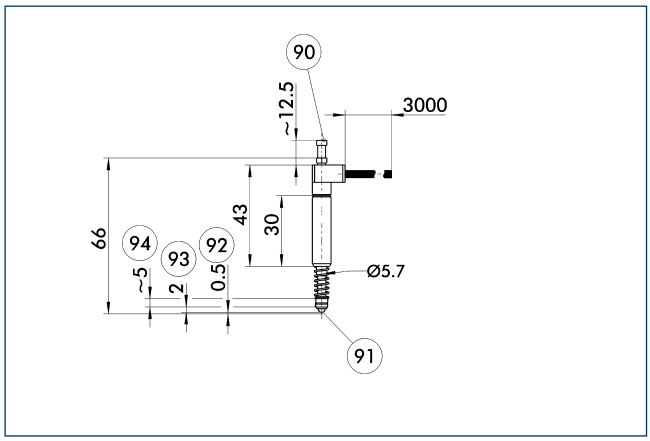

(90) Position with retracted feeler rod
(91) Carbide ball 1/8"
(92) Initial stroke
(93) Range of measurement
(94) Free stroke

The drawing shows the basic version of the sensor.

Connection diagram

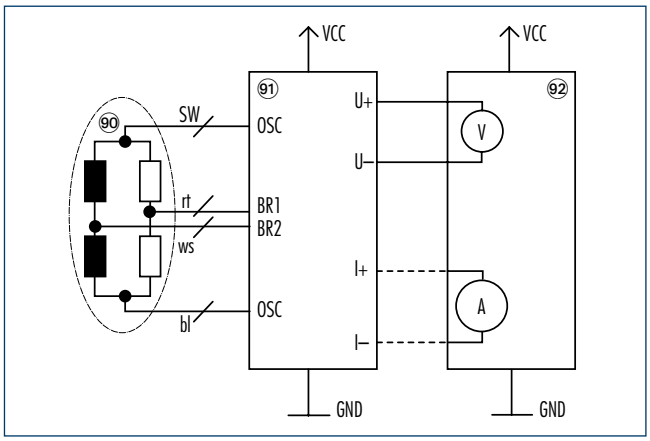

(90) APS-M1S sensor
(91) APS-M1E electronic processor
(92) Automation device, e.g. S7-300

Cable connector / cable extension

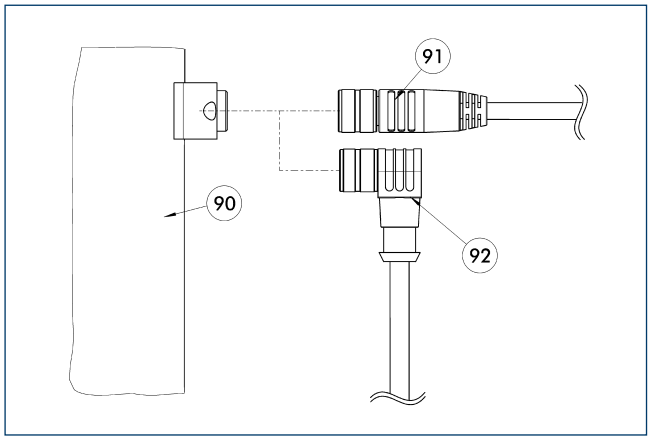

(90) Connecting point for component
(91) Cable with straight connection
(92) Cable with angular connection

Description	ID	Length [m]
Connection cables		
APS-K0200	0302066	2
APS-K0700	0302068	7

ⓘ BG stands for a connection cable with a straight female connector and BW for an angled female connector.

Easy programming Robust. Flexible.

FPS Flexible Position Sensor

The FPS sensor system determines the position of the base jaws. Then it digitally shows, in which of the five freely teachable ranges the jaw is currently positioned. Moreover, the jaw position can be evaluated from the software "FPS controller"

Field of Application

Position determinationof the gripper jaws up to a stroke of appr. 30 mm in clean or dirty environment free from swarfs.

Advantages – Your benefit

Easy operation with only two push buttons or via machine control unit with free control cables

Simple start-up since all positions can be adjusted by the customer himself using the teach-in procedure

Five digital outputs for greater efficiency towards single sensors

Close spacing between two switching points is adjustable

Insensitive to contaminations by not ferromagnetic materials

Function and switching condition display via LEDs at the evaluation electronics

CE compliant for safety and longevity in continuous

Digital technology for insensitivity to interference

Many more additional features measurement functionality, communication and remote maintenance via RS232 protocol, position programming and read out of switching points, monitoring of temperature and power supply, visualization via PC, data logging, calibration of the system to gripper stroke, intelligent access controll, adaptation to new product in the process

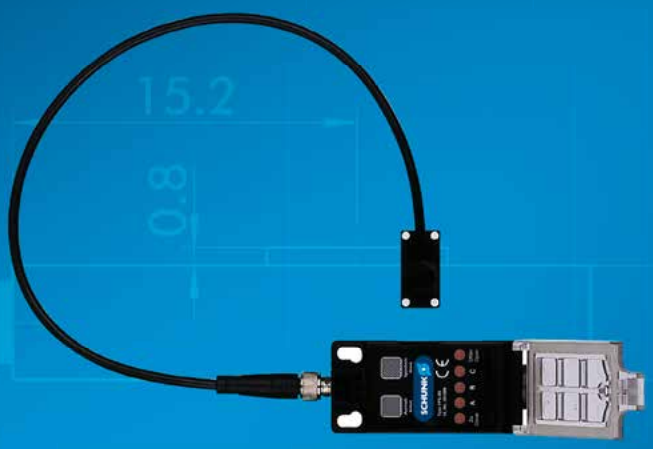

Options and special Information

Sources of interference: Sensors can be influenced by other magnetic fields in the immediate vicinity. Disturbing magnetic fields can be generated by motors, electric welders, permanent magnets or magnetized material (so-called soft magnets) such as Allen keys, metal chips, etc.

Application example

① **FPS-F5 / -F5 T Electronic Processor**

② **PGN-plus 2-Finger Parallel Gripper**

③ **Software "FPS Controller"**

SCHUNK offers more ...

The following components make the product FPS even more productive – the suitable addition for the highest functionality, flexibility, reliability, and controlled production.

MPG-plus Pneumatic Small Parts Gripper

PGN-plus 2-Finger Parallel Gripper

KA Connection Cable

ⓘ Further information regarding the products can be found on the following product pages or at www.schunk.com. Please contact us for further information: SCHUNK technical hotline +49-7133-103-2696

CAD data, operating manuals and other current product documents are available at **www.schunk.com**

FPS FPS-S

Accessories | Sensor Systems | Flexible Position Sensor

Technical data

Description		FPS-S M8	FPS-S 13
ID		0301704	0301705
Cable diameter	[mm]	3.5	3.5
Cable length	[cm]	30	30
Connection of FPS on processor side		M8	M8
Weight	[kg]	0.02	0.01
min. / max. ambient temperature	[°C]	-25/70	-25/70
IP class (sensor)		65	65
IP class (sensor connected)		65	65
min. bending radius (dynamically)	[mm]	17.5	17.5
min. bending radius (statically)	[mm]	35	35

S-M8 sensor

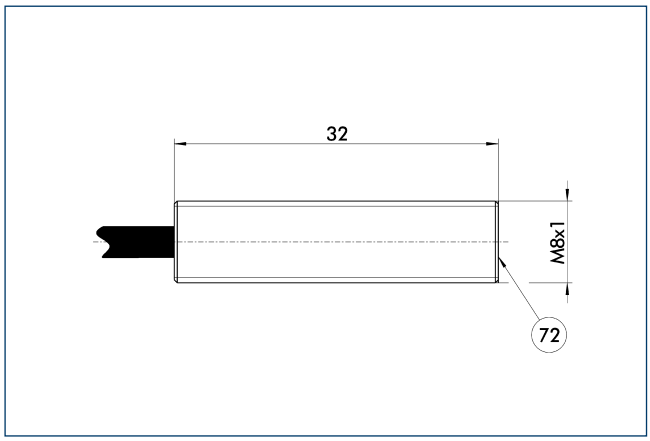

72 Active sensor surface

The drawing shows the basic version of the sensor without the corresponding evaluation electronics.

S13 sensor

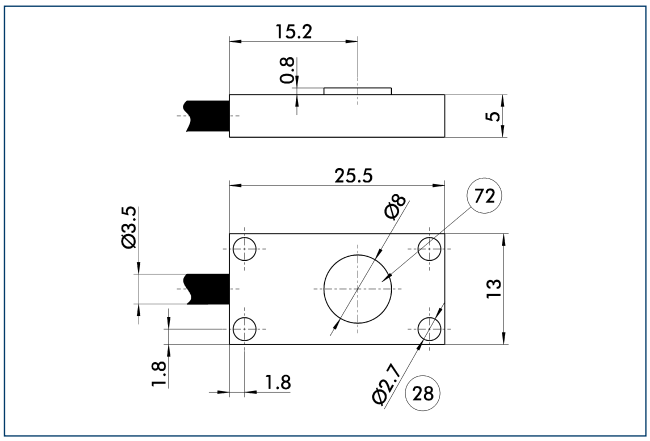

28 Through-bore

72 Fit for centering sleeves

The drawing shows the basic version of the sensor without the corresponding evaluation electronics.

FPS FPS-F5

Accessories | Sensor Systems | Flexible Position Sensor

Technical data

Description		FPS-F5	FPS-F5 T
ID		0301805	0301807
Nominal voltage	[V]	24	24
min. voltage (DC)	[V]	10	10
max. voltage DC	[V]	30	30
Nominal current (DC)	[A]	0.01	0.01
Weight	[kg]	0.06	0.06
min. / max. ambient temperature	[°C]	-25/70	-25/70
IP class		65	65

ⓘ The units are suitable for monitoring up to 5 positions. By indicating the tolerance values, the FPS-F5 T flexible position sensor can be also used for workpiece control.

Electronic processor

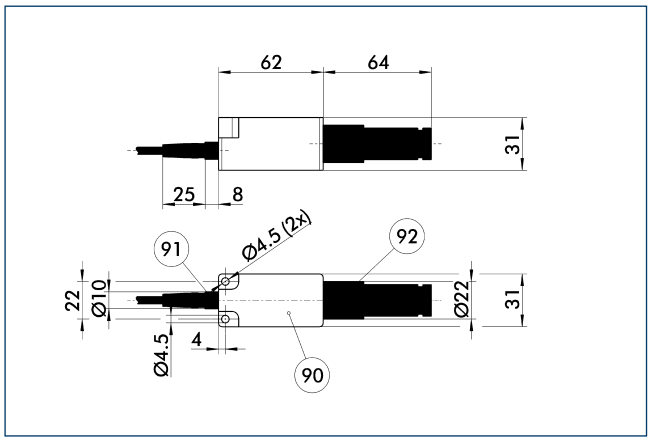

90 Transparent plastic cover, below operating and display panel

91 Plug sensor side

92 Plug cabinet side

The drawing shows the evaluation of the FPS sensors.

Connection diagram

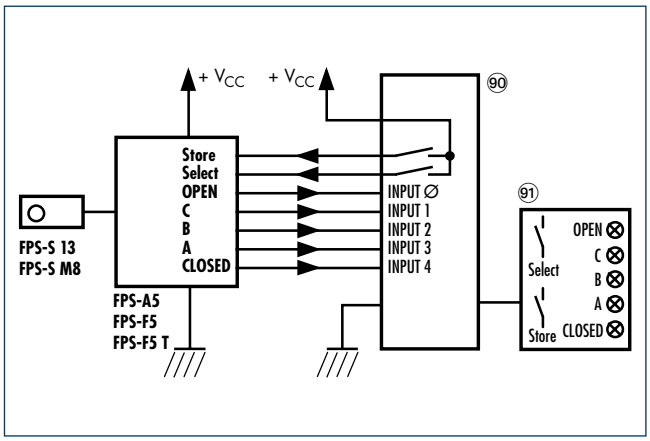

90 SPS / PCL

91 Machine tableau (provided by the customer)

Adaptable. Flexible. Robust.

FMS Force Measuring Jaws

Force measuring jaws measure gripping forces, but can also determine workpiece weights or dimensional deviations. There are active and passive intermediate jaws (FMS-ZBA or FMS-ZBP). At least one active force measuring jaw is required per gripper, the rest can be passive. For each active jaw, a FMS-A control unit and a FMS-AK connection cable are required

Field of Application

Used in applications, where the actually occuring gripping force is required, e.g. for adjustment of the gripping force, static or dynamic control of gripping force or integrated in measuring and educational processes.

Advantages – Your benefit

Simplest handling via a control line that is directly connected to an SPC

Result output via analog voltage value

Simple, linear relationship between output voltage and gripping force

Simple zero balancing with button or via control line

Integrated LCD for visual monitoring

Easy assembly

Hermetically sealed for use in extreme working conditions

Options and special Information

General notes about the series: The FMS force measuring system allows you to measure forces that act on the base jaw in the direction of the jaw movement. Up to three active (equipped with sensors) FMS-ZBA intermediate jaws are required for this purpose, depending on the application.

The remaining base jaws are equipped with FMS-ZBP passive intermediate jaws (without sensor system). Each FMS-ZBA active intermediate jaw requires an FMS-A1 electronic processor for evaluation, and an FMS-AK connection cable for connecting the electronic processor to an SPC or a control cabinet.

Application example

① **FMS Force Measuring Jaws**

② **PGN-plus 2-Finger Parallel Gripper**

SCHUNK offers more ...

The following components make the product FMS even more productive – the suitable addition for the highest functionality, flexibility, reliability, and controlled production.

PGN-plus 2-Finger Parallel Gripper

PZN-plus 3-Finger Centric Gripper

EGN Universal Gripper

EZN Universal Gripper

ⓘ Further information regarding the products can be found on the following product pages or at www.schunk.com. Please contact us for further information: SCHUNK technical hotline +49-7133-103-2696

CAD data, operating manuals and other current product documents are available at **www.schunk.com**

Technical data

Description		FMS-ZBA 50	FMS-ZBA 64	FMS-ZBA 80	FMS-ZBA 100	FMS-ZBA 125	FMS-ZBA 160
ID		0301830	0301832	0301834	0301836	0301838	0301840
Beginning of the measurement area	[N]	0	0	0	0	0	0
End of the measurement areas	[N]	145	260	430	685	1120	1600
End of the loading area	[N]	290	520	860	1370	2240	3200
Weight	[kg]	0.03	0.04	0.06	0.08	0.13	0.24
min. ambient temperature	[°C]	-10	-10	-10	-10	-10	-10
max. ambient temperature	[°C]	70	70	70	70	70	70
Passiv							
Description		FMS-ZBP 50	FMS-ZBP 64	FMS-ZBP 80	FMS-ZBP 100	FMS-ZBP 125	FMS-ZBP 160
ID		0301831	0301833	0301835	0301837	0301839	0301841
Weight	[kg]	0.02	0.03	0.04	0.06	0.11	0.19

Description		FMS-ZBA 200	FMS-ZBA 300
ID		0301842	0301846
Beginning of the measurement area	[N]	0	0
End of the measurement areas	[N]	2325	5150
End of the loading area	[N]	4650	10300
Weight	[kg]	0.4	0.91
min. ambient temperature	[°C]	-10	
max. ambient temperature	[°C]	70	
Passiv			
Description		FMS-ZBP 200	FMS-ZBP 300
ID		0301843	0301847
Weight	[kg]	0.34	0.78

FMS-ZBA / ZBP 50 force-measuring jaws

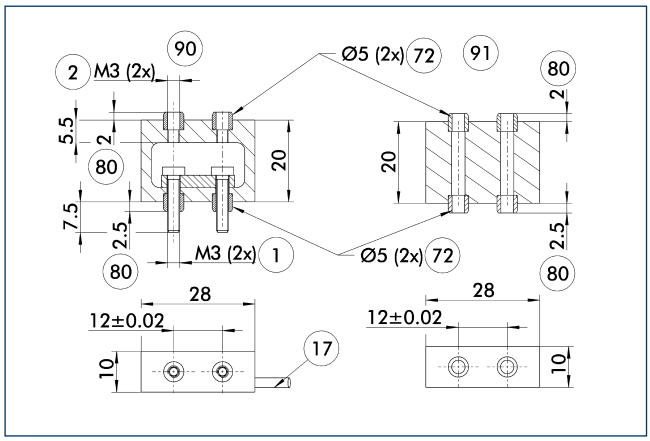

1 Gripper connection
2 Finger connection
17 Cable outlet
72 Fit for centering sleeves
80 Depth of the centering sleeve hole in the mating part
90 Active intermediate jaws
91 Passive intermediate jaws

The drawing shows the active and the passive force-measuring jaw without associated evaluation electronics.

FMS-ZBA / ZBP 64 force-measuring jaws

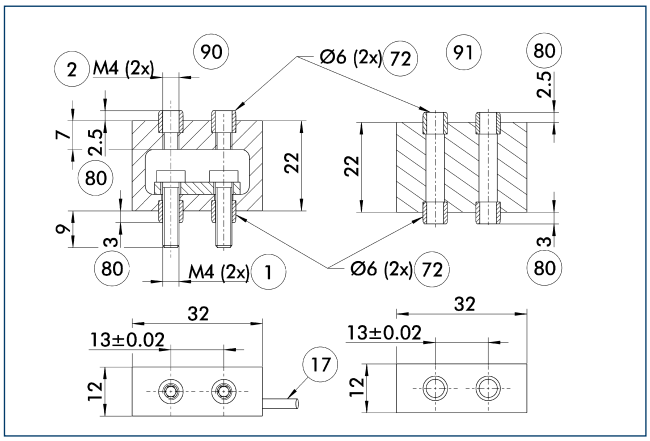

1 Gripper connection
2 Finger connection
17 Cable outlet
72 Fit for centering sleeves
80 Depth of the centering sleeve hole in the mating part
90 Active intermediate jaws
91 Passive intermediate jaws

The drawing shows the active and the passive force-measuring jaw without associated evaluation electronics.

FMS-ZBA / ZBP 80 force-measuring jaws

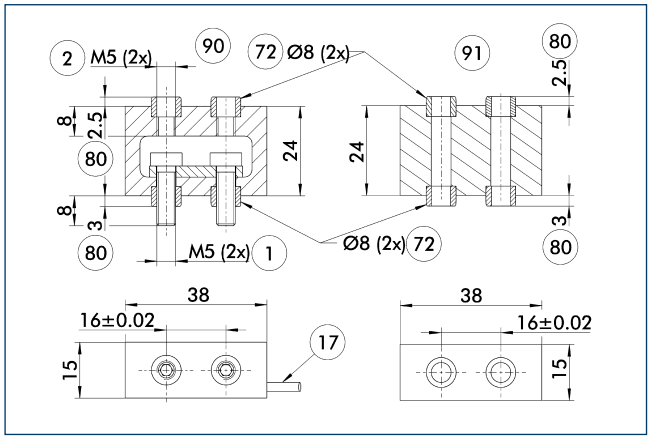

1 Gripper connection
2 Finger connection
17 Cable outlet
72 Fit for centering sleeves
80 Depth of the centering sleeve hole in the mating part
90 Active intermediate jaws
91 Passive intermediate jaws

The drawing shows the active and the passive force-measuring jaw without associated evaluation electronics.

FMS-ZBA / ZBP 100 force-measuring jaws

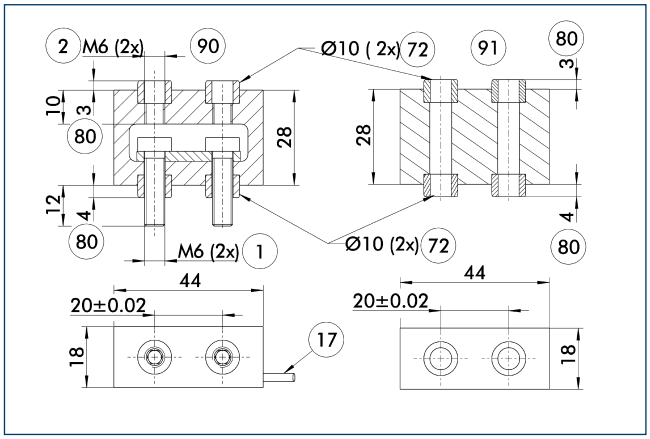

1 Gripper connection
2 Finger connection
17 Cable outlet
72 Fit for centering sleeves
80 Depth of the centering sleeve hole in the mating part
90 Active intermediate jaws
91 Passive intermediate jaws

The drawing shows the active and the passive force-measuring jaw without associated evaluation electronics.

FMS-ZBA / ZBP 125 force-measuring jaws

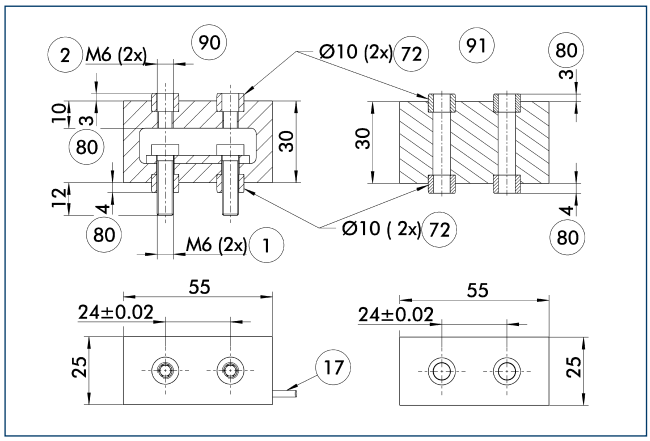

1 Gripper connection
2 Finger connection
17 Cable outlet
72 Fit for centering sleeves
80 Depth of the centering sleeve hole in the mating part
90 Active intermediate jaws
91 Passive intermediate jaws

The drawing shows the active and the passive force-measuring jaw without associated evaluation electronics.

FMS-ZBA / ZBP 160 force-measuring jaws

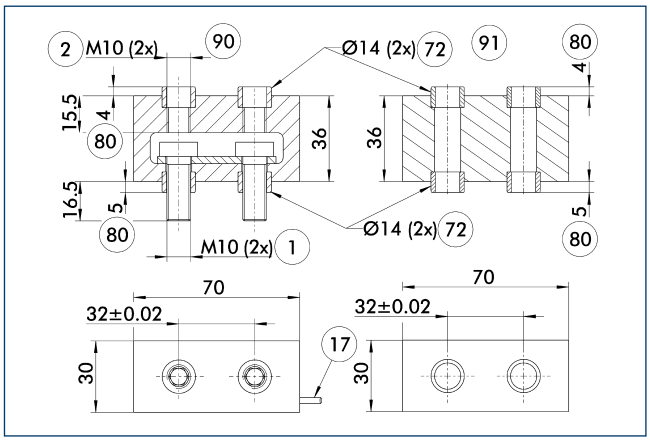

1 Gripper connection
2 Finger connection
17 Cable outlet
72 Fit for centering sleeves
80 Depth of the centering sleeve hole in the mating part
90 Active intermediate jaws
91 Passive intermediate jaws

The drawing shows the active and the passive force-measuring jaw without associated evaluation electronics.

FMS-ZBA / ZBP 200 force-measuring jaws

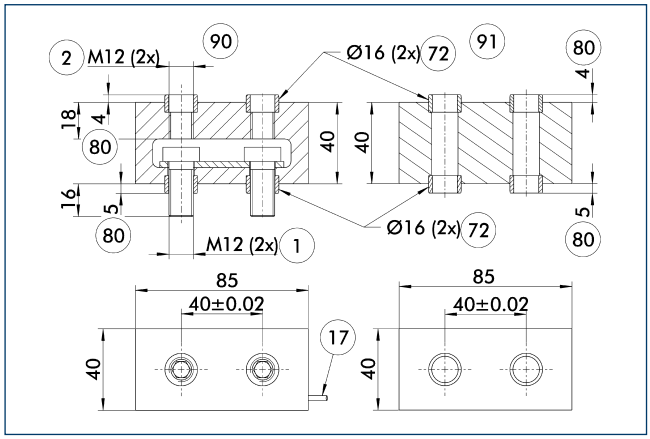

1 Gripper connection
2 Finger connection
17 Cable outlet
72 Fit for centering sleeves
80 Depth of the centering sleeve hole in the mating part
90 Active intermediate jaws
91 Passive intermediate jaws

The drawing shows the active and the passive force-measuring jaw without associated evaluation electronics.

FMS-ZBA / ZBP 300 force-measuring jaws

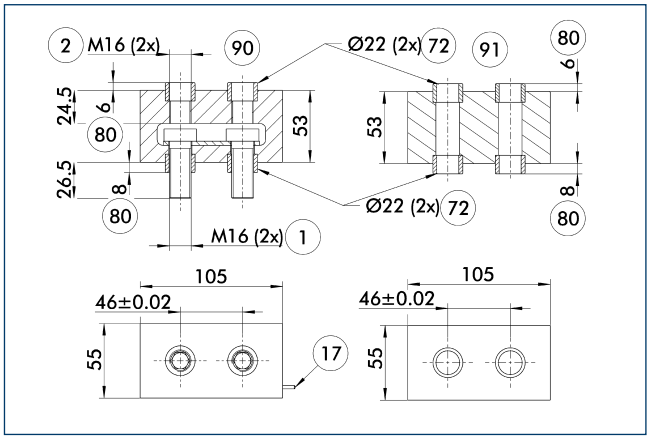

1 Gripper connection
2 Finger connection
17 Cable outlet
72 Fit for centering sleeves
80 Depth of the centering sleeve hole in the mating part
90 Active intermediate jaws
91 Passive intermediate jaws

The drawing shows the active and the passive force-measuring jaw without associated evaluation electronics.

Electronic processor

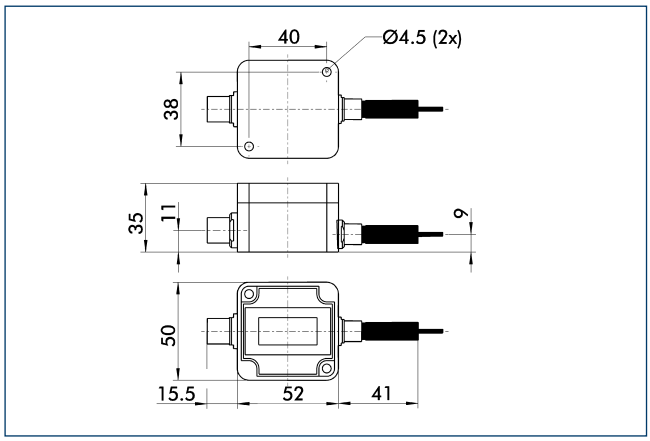

Force measuring jaws measure gripping forces, but can also determine workpiece weights or dimensional deviations. There are active and passive intermediate jaws (FMS-ZBA or FMS-ZBP). At least one active force measuring jaw is required per gripper, the rest can be passive. For each active jaw, a FMS-A control unit and a FMS-AK connection cable are required.

Description	ID	
Electronic processor		
FMS-A1	0301810	
FMS-A2	0301811	

Flexible. Productive. Easy.

SST Sensor Tester

The SST sensor tester enables the rapid testing and adjustment of inductive sensors, magnetic switches and reed contacts. The necessary power is supplied by a 9 V compound battery

Field of Application

Sensor testing and adjustment of the switching point (sensor calibration)

Advantages – Your benefit

Visual and acoustic signal for simple function checking and adjustment

For 2- and 3-wire DC technology enabling the connection of reed contacts, capacitive and inductive sensors

Tests possible without dismantling sensors for short maintenance times

Connections for M8 and M12 or open cable ends possible ensuring suitability for all SCHUNK sensors

PNP and NPN sensors can be tested

Operating voltage with 9 V compound battery for mobile use

Automatic shut-off function for an extended battery life

Options and special Information

Please note that only one SST input (M8 or M12 or cable terminal input) can be used at a time.

If the toggle switch is towards the sticker (name plate) then the sensor is in PNP mode. If not, NPN is selected.

Application example

① **SST Sensor Tester**

② **IN 80 Inductive Proximity Switch**

③ **Metal Plate**

SCHUNK offers more ...

The following components make the product SST even more productive – the suitable addition for the highest functionality, flexibility, reliability, and controlled production.

RMS 22 Sensor

MMS 22 Sensor

IN ... Sensor

Inductive Proximity Sensor

ⓘ Further information regarding the products can be found on the following product pages or at www.schunk.com. Please contact us for further information: SCHUNK technical hotline +49-7133-103-2696

CAD data, operating manuals and other current product documents are available at **www.schunk.com**

SST

Accessories | Sensor System Accessories | Sensor Tester

Technical data

Description		SST
ID		0301400
Connection 1		M8x1
Connection 2		M12x1
Connection 3		Directly clamping
Housing material		Plastic
IP class		20

SST main view

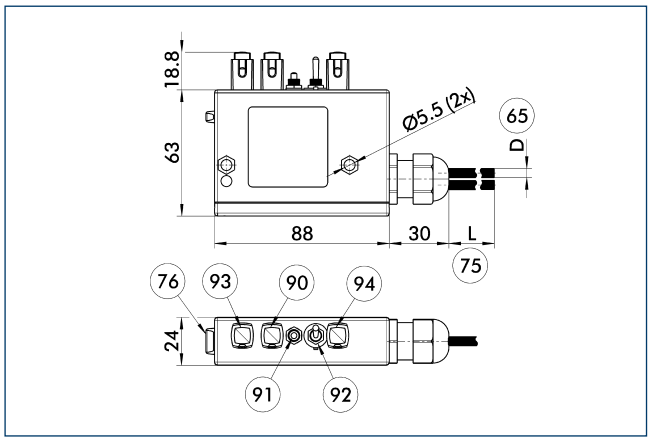

65 Cable diameter
75 Cable length
76 LED
90 Signal / 4
91 ON button
92 PNP / NPN switch
93 Power supply UB/1
94 Power supply GND/3

ⓘ Power supply 9 V DC (block battery type LR 61)

Flexible. Light. Easy.

CLI Clip

The clip allows easy fixing of two straight sensor plug connectors

Field of Application

Universally solution where sensors are used

Advantages – Your benefit

Clip for an M8 or M12 connector for flexible use

Through-bore for quick and easy installation via a screw

Made from PA material suitable for many application areas

Options and special Information

Easy assembly: The CLI clip allows fixing of two straight M8 / M12 sensor plug connectors. The connectors can be tool free disassembled / assembled, and simplify handling during exchange of sensors or cables.

Application example

① **Clip**

② **PGN-plus Universal Gripper**

③ **SRU-plus Rotary Actuator**

④ **KA Connection Cable**

⑤ **Cable Extensions**

SCHUNK offers more ...

The following components make the product CLI even more productive – the suitable addition for the highest functionality, flexibility, reliability, and controlled production.

IN ... Sensor

MMS 22 Sensor

OAS Optical Distance Sensor

Sensor Cables

ⓘ Further information regarding the products can be found on the following product pages or at www.schunk.com. Please contact us for further information: SCHUNK technical hotline +49-7133-103-2696

CAD data, operating manuals and other current product documents are available at **www.schunk.com**

CLI

Accessories | Sensor System Accessories | Connector Clip

Technical data

Description		CLI-M8	CLI-M12
ID		0301463	0301464
Weight	[g]	10	10
Material		PA	PA
Connector size		M8	M12

CLI-M8 main view

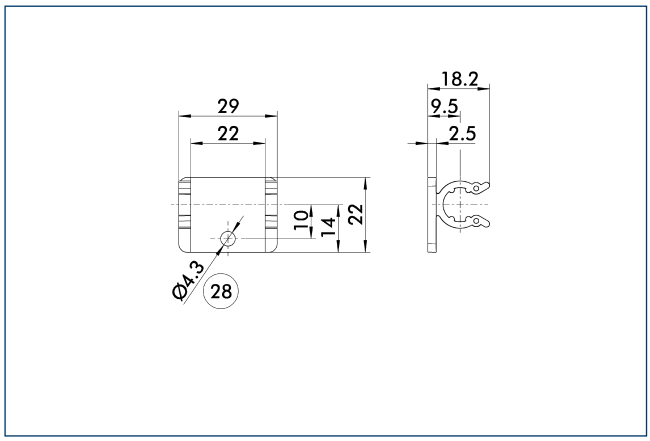

28 Through-bore

CLI-M12 main view

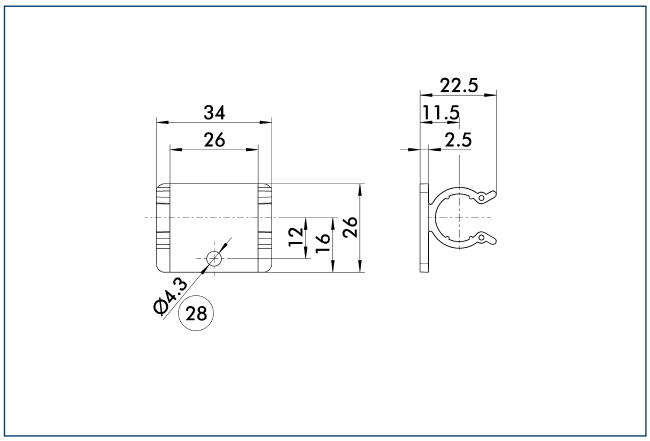

28 Through-bore

Easy. Robust. Compact.

KA Connection Cable

The SCHUNK KA connection cable is excellently suitable for supplying SCHUNK components and for leading signals

Field of Application

The KA connection cables are used for every sensor, gripping, rotary and linear module, and also for numerous components of the robot accessories.

Advantages – Your benefit

Industrial standard plug connector for fast and easy commissioning

Connection cable with open wire strands for individual design of connection cables

Options and special Information

Troublefree combination with SCHUNK KBU / KST: therefore the connection cables can be adjusted to the suitable length and equipped with connectors.

Application example

① **Clip**

② **PGN-plus Universal Gripper**

③ **SRU-plus Rotary Actuator**

④ **KA Connection Cable**

⑤ **Cable Extensions**

SCHUNK offers more ...

The following components make the product KA even more productive – the suitable addition for the highest functionality, flexibility, reliability, and controlled production.

Inductive Proximity Sensor

MMS 22 Sensor

EGP Electric Parallel Gripper

Sensor Distributor

ⓘ Further information regarding the products can be found on the following product pages or at www.schunk.com. Please contact us for further information: SCHUNK technical hotline +49-7133-103-2696

CAD data, operating manuals and other current product documents are available at **www.schunk.com**

KA M8

Accessories | Cables, Connectors, and Distributors | Connection Cable

Technical data

Straight PNP					
Description		KA BG08-L 3P-0300-PNP	KA BG08-L 3P-0500-PNP	KA BG08-L 4P-0500	KA BG08-L 4P-1000
ID		0301622	0301623	0307767	0307768
Connection sensor side		Socket	Socket	Socket	Socket
Connection electric cabinet sided		open wires	open wires	open wires	open wires
Angle electric cabinet sided	[°]	0	0	0	0
Cable length	[m]	3	5	5	10
Number of wires		3	3	4	4
Wire cross section	[mm²]	0.14	0.14	0.24	0.24
Weight	[kg]	0.09	0.18		
max. current per wire	[A]	0.5	0.5	0.5	0.5
max. total current	[A]	0.5	0.5	0.5	0.5
Angled NPN					
Description		KA BW08-L 3P-0300-NPN	KA BW08-L 3P-0500-NPN		
ID		0301602	9641116		
Connection sensor side		Socket	Socket		
Connection electric cabinet sided		open wires	open wires		
Angle electric cabinet sided	[°]	0	0		
Cable length	[m]	3	5		
Number of wires		3	3		
Wire cross section	[mm²]	0.14	0.14		
Weight	[kg]	0.12	0.2		
max. current per wire	[A]	0.5	0.5		
max. total current	[A]	0.5	0.5		
Angled PNP					
Description		KA BW08-L 3P-0300-PNP	KA BW08-L 3P-0500-PNP	KA BW08-L 4P-0500	KA BW08-L 4P-1000
ID		0301594	0301502	0307765	0307766
Connection sensor side		Socket	Socket	Socket	Socket
Connection electric cabinet sided		open wires	open wires	open wires	open wires
Angle electric cabinet sided	[°]	0	0	0	0
Cable length	[m]	3	5	5	10
Number of wires		3	3	4	4
Wire cross section	[mm²]	0.14	0.14	0.24	0.24
Weight	[kg]	0.12	0.2		
max. current per wire	[A]	0.5	0.5	0.5	0.5
max. total current	[A]	0.5	0.5	0.5	0.5

KA BG08-L 3P main view

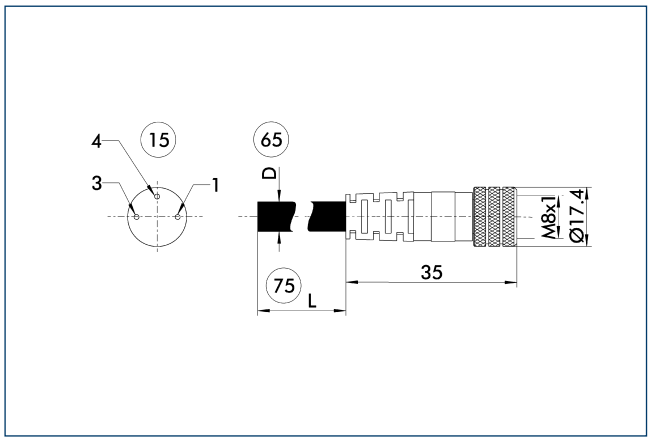

15 Socket
65 Cable diameter
75 Cable length

KA BG08-L 4P main view

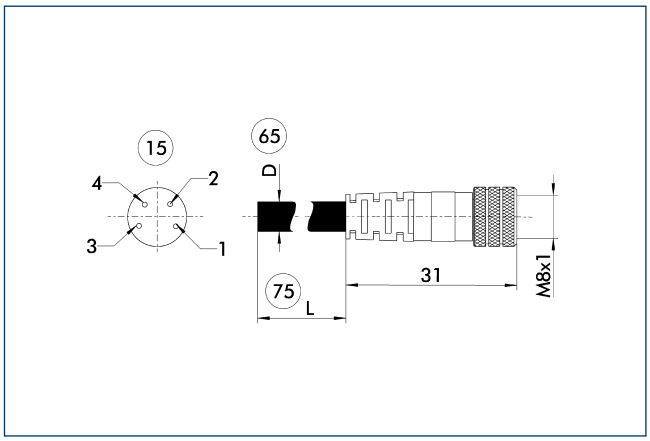

15 Socket
65 Cable diameter
75 Cable length

KA BW08-L 3P main view

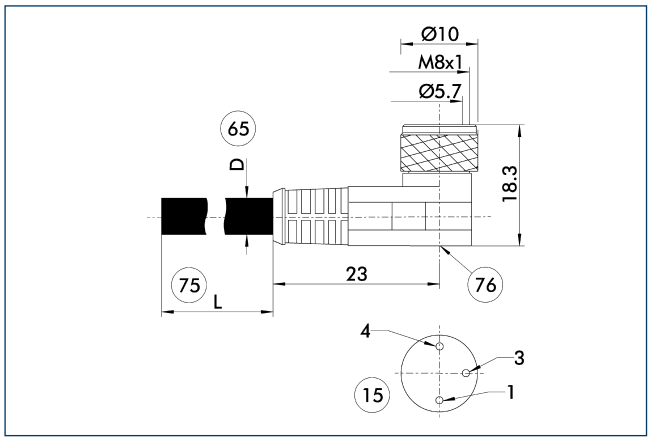

15 Socket
65 Cable diameter
75 Cable length
76 LED

KA BW08-L 4P main view

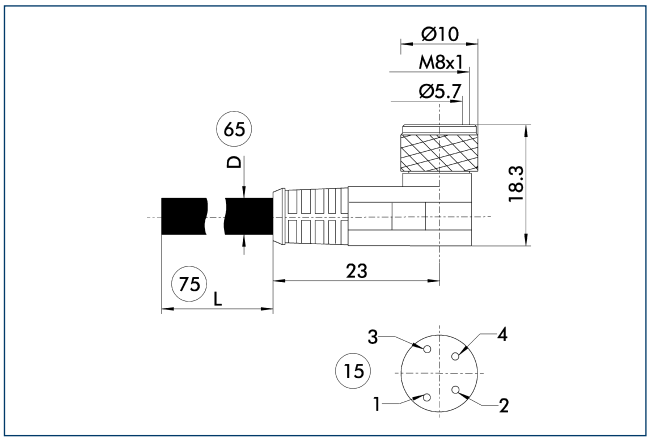

15 Socket
65 Cable diameter
75 Cable length

KA M9

Accessories | Cables, Connectors, and Distributors | Connection Cable

Technical data

Socket			
Description		KA-BW9-L7P-0200	KA-BW9-L7P-0500
ID		0323001	0323003
Connection electric cabinet sided		open wires	open wires
Angle electric cabinet sided	[°]	0	0
Cable length	[m]	2	5
Number of wires		7	7
Wire cross section	[mm²]	0.14	0.14
max. current per wire	[A]	0.5	0.5
max. total current	[A]	0.5	0.5
Connector			
Description		KA-SW9-L7P-0200	KA-SW9-L7P-0500
ID		0323002	0323004
Connection electric cabinet sided		open wires	open wires
Angle electric cabinet sided	[°]	0	0
Cable length	[m]	2	5
Number of wires		7	7
Wire cross section	[mm²]	0.14	0.14
max. current per wire	[A]	0.5	0.5
max. total current	[A]	0.5	0.5

KA SW09-L7P main view

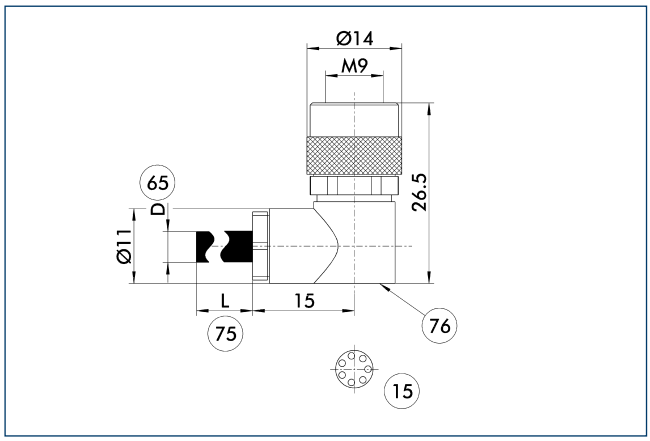

15 Socket
65 Cable diameter
75 Cable length
76 LED

KA BW09-L7P main view

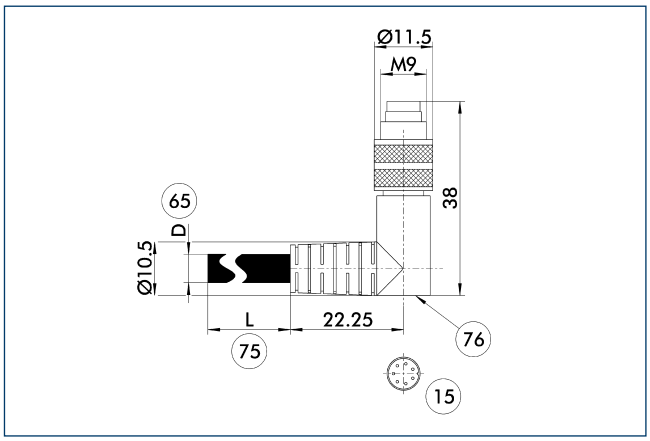

15 Socket
65 Cable diameter
75 Cable length
76 LED

Technical data

Straight PNP			
Description		KA BG12-L 3P-0500-PNP	
ID		30016369	
Connection sensor side		Socket	
Connection electric cabinet sided		open wires	
Angle electric cabinet sided	[°]	0	
Cable length	[m]	5	
Number of wires		3	
Wire cross section	[mm²]	0.14	
Weight	[kg]	0.18	
max. current per wire	[A]	0.5	
max. total current	[A]	0.5	
Angled PNP			
Description		KA BW12-L 3P-0500-PNP	KA BW12-L 3P-0300-PNP
ID		0301507	0301503
Connection sensor side		Socket	Socket
Connection electric cabinet sided		open wires	open wires
Angle electric cabinet sided	[°]	0	0
Cable length	[m]	5	3
Number of wires		3	3
Wire cross section	[mm²]	0.14	0.14
Weight	[kg]	0.2	0.14
max. current per wire	[A]	0.5	0.5
max. total current	[A]	0.5	0.5

KA BW12-L 3P main view

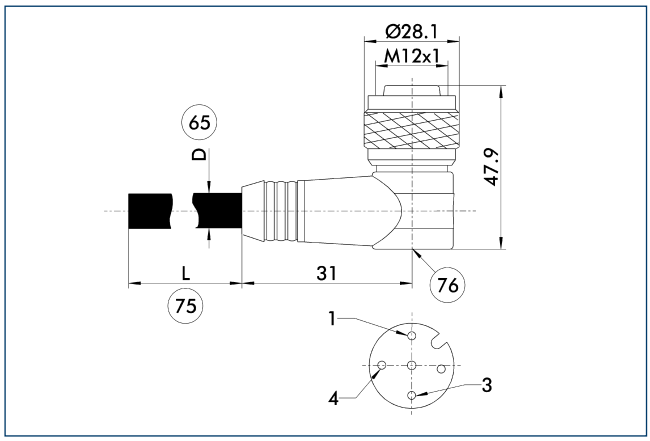

65 Cable diameter
75 Cable length
76 LED

KA BG12-L 3P main view

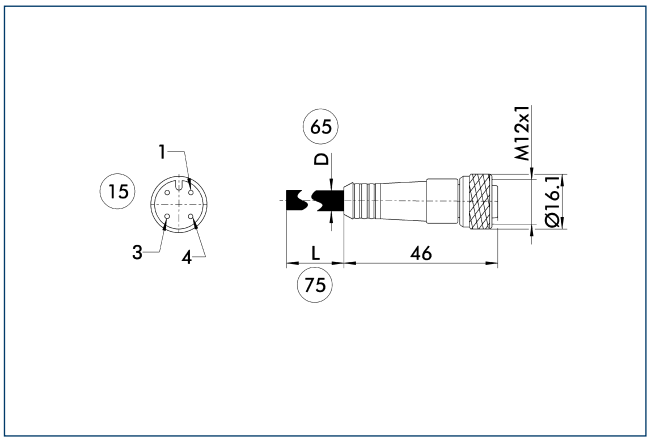

15 Socket
65 Cable diameter
75 Cable length
76 LED

KA M16

Accessories | Cables, Connectors, and Distributors | Connection Cable

Technical data

Socket			
Description		KA BW16-L 12P-0500	KA BG16-L 12P-1000
ID		0323005	0301801
Connection electric cabinet sided		open wires	open wires
Angle electric cabinet sided	[°]	0	0
Cable length	[m]	5	10
Number of wires		12	12
Wire cross section	[mm²]	0.14	0.14
Weight	[kg]	0.34	0.68
max. current per wire	[A]	0.5	0.5
max. total current	[A]	0.5	0.5
Connector			
Description		KA SW16-L 12P-0500	
ID		0323006	
Connection electric cabinet sided		open wires	
Angle electric cabinet sided	[°]	0	
Cable length	[m]	5	
Number of wires		12	
Wire cross section	[mm²]	0.14	
max. current per wire	[A]	0.5	
max. total current	[A]	0.5	

KA BW16-L main view

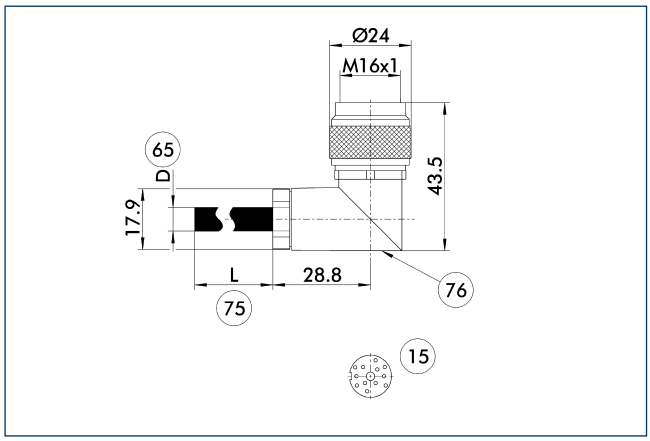

15 Socket
65 Cable diameter
75 Cable length
76 LED

KA BG16-L main view

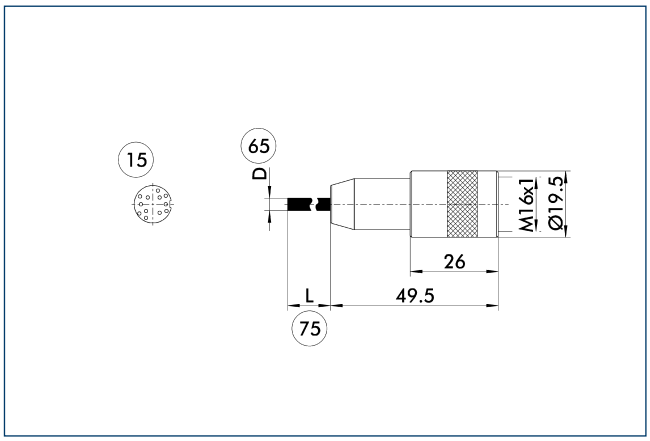

15 Socket
65 Cable diameter
75 Cable length

KA SW 16-L main view

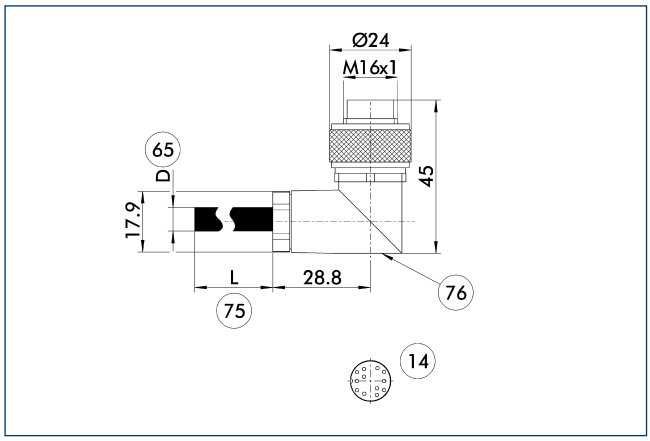

14 Connector
65 Cable diameter
75 Cable length
76 LED

Easy. Robust. Compact.

KBU / KST Cable Connector

The KST (cable connector) and KBU (cable bushing) are used for preparing lines for sensors and actuators

Field of Application

The SCHUNK KBU / KST are used together with sensors, actuators, distributors and cables. Wherever customized cable lengths are required.

Advantages – Your benefit

Easy assembly

The KBU / KST can be quickly and easily connected to cables, and therefore reduces the complete installation time.

Industrial standard plug connector

Options and special Information

Can be troublefree combined with SCHUNK sensors, actuators, and sensor distributors for simple and flexible handling

Application example

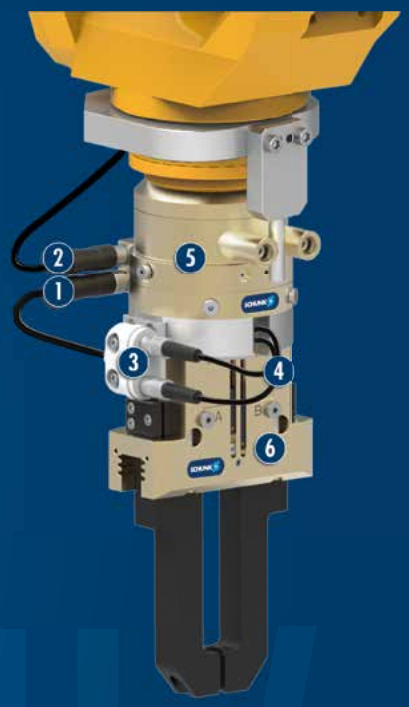

① **KST Cable Connector**

② **Cable Extensions**

③ **Sensor Distributor**

④ **MMS Magnetic Switch**

⑤ **DDF 2 Rotary Feed-through**

⑥ **PGN-plus Universal Gripper**

SCHUNK offers more ...

The following components make the product KBU / KST even more productive – the suitable addition for the highest functionality, flexibility, reliability, and controlled production.

Sensor Cables

Inductive Proximity Sensor

SST Sensor Tester

Sensor Distributor

ⓘ Further information regarding the products can be found on the following product pages or at www.schunk.com. Please contact us for further information: SCHUNK technical hotline +49-7133-103-2696

CAD data, operating manuals and other current product documents are available at **www.schunk.com**

KBU / KST M8

Accessories | Cables, Connectors, and Distributors | Cable Connector

Technical data

Cable socket			
Description		KBU-M8-G 3P	KBU-M8-W 3P
ID		0300052	0300053
Connection electric cabinet sided		open wires	open wires
Angle electric cabinet sided	[°]	0	0
Number of wires		3	3
Wire cross section	[mm²]	0.25	0.25
max. current per wire	[A]	0.5	0.5
max. total current	[A]	0.5	0.5
Cable connector			
Description		KST-M8-G 3P	KST-M8-W 3P
ID		0300050	0300051
Connection electric cabinet sided		open wires	open wires
Angle electric cabinet sided	[°]	0	0
Number of wires		3	3
Wire cross section	[mm²]	0.25	0.25
max. current per wire	[A]	0.5	0.5
max. total current	[A]	0.5	0.5

Socket straight M8

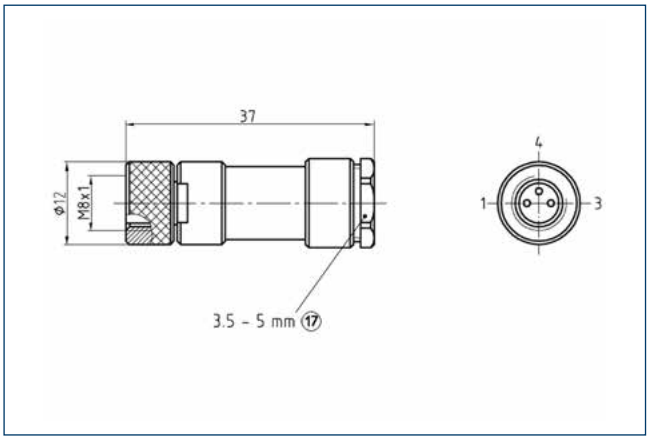

⑰ Cable outlet

Socket angled M8

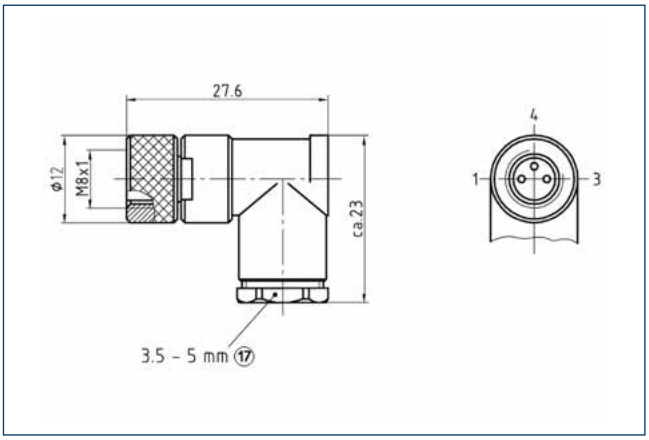

⑰ Cable outlet

Connector straight M8

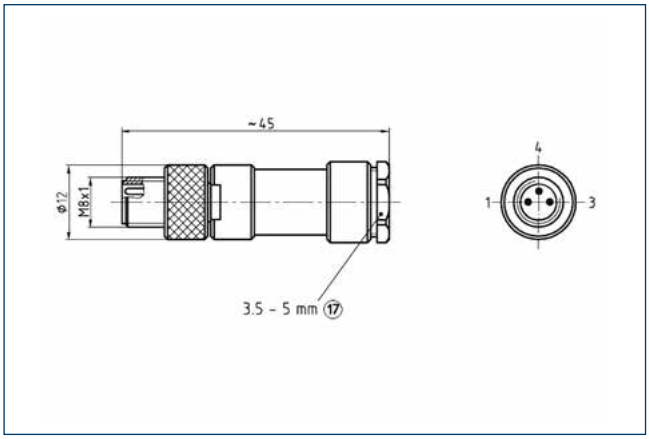

⑰ Cable outlet

Connector angled M8

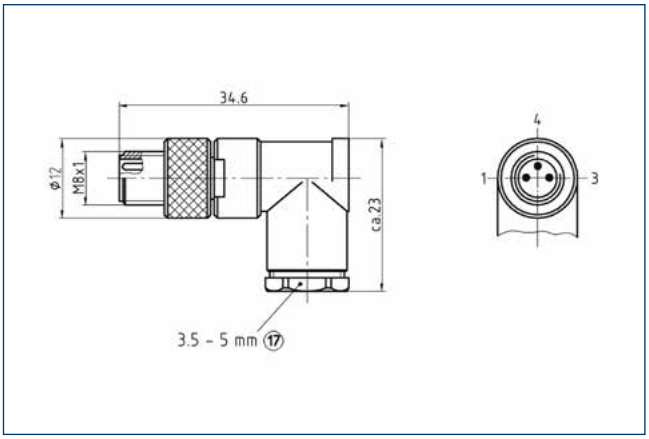

⑰ Cable outlet

KBU / KST M12

Accessories | Cables, Connectors, and Distributors | Cable Connector

Technical data

Cable socket			
Description		KBU-M12-G	KBU-M12-W
ID		0300062	0300063
Connection electric cabinet sided		open wires	open wires
Angle electric cabinet sided	[°]	0	0
Number of wires		3	3
Wire cross section	[mm²]	0.75	0.75
max. current per wire	[A]	0.5	0.5
max. total current	[A]	0.5	0.5
Cable connector			
Description		KST-M12-G	KST-M12-W
ID		0300060	0300061
Connection electric cabinet sided		open wires	open wires
Angle electric cabinet sided	[°]	0	0
Number of wires		3	3
Wire cross section	[mm²]	0.75	0.75
max. current per wire	[A]	0.5	0.5
max. total current	[A]	0.5	0.5

Socket straight M12

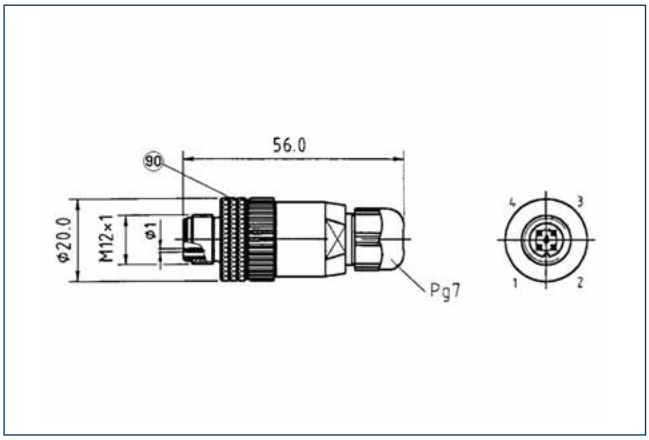

(90) Locking ring

Socket angled M12

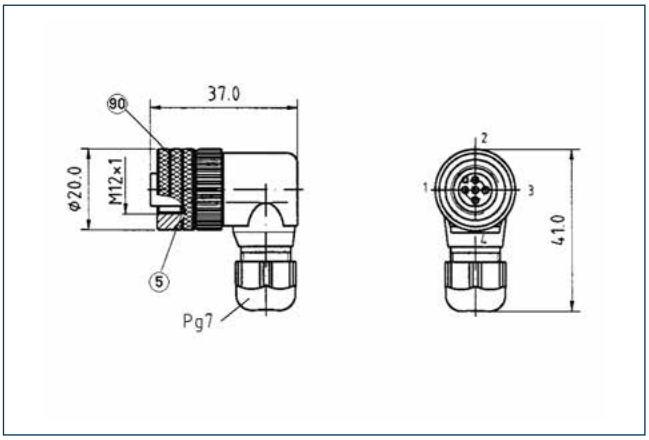

(5) O-ring (90) Locking ring

Connector straight M12

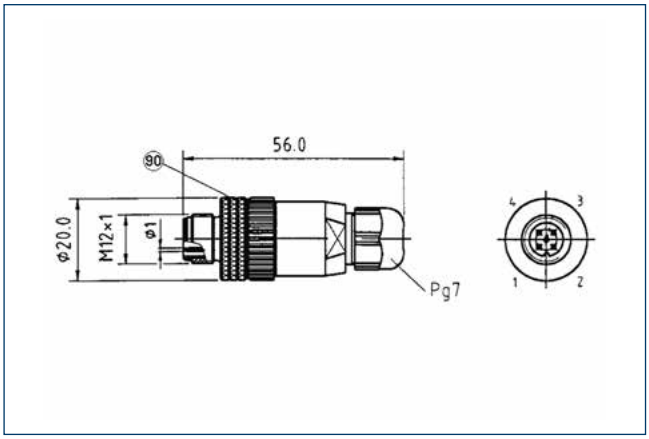

(90) Locking ring

Connector angled M12

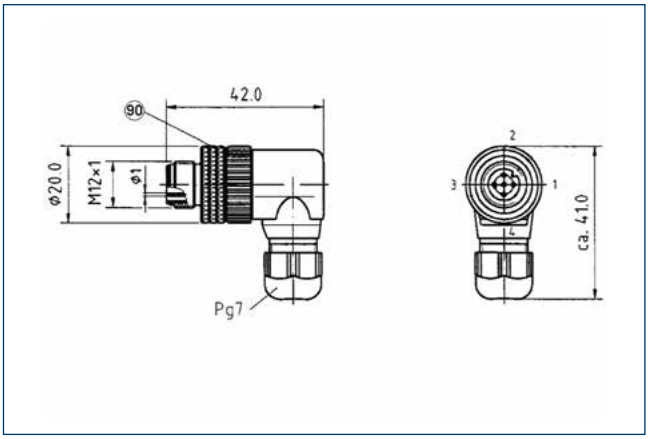

(90) Locking ring

KBU / KST M16

Accessories | Cables, Connectors, and Distributors | Cable Connector

Technical data

Cable socket		
Description		KBU-M16 12P
ID		9941732
Connection electric cabinet sided		open wires
Angle electric cabinet sided	[°]	0
Number of wires		12
Wire cross section	[mm²]	0
max. current per wire	[A]	0.5
max. total current	[A]	0.5
Cable connector		
Description		KST-M16 12P
ID		9940790
Connection electric cabinet sided		open wires
Angle electric cabinet sided	[°]	0
Number of wires		12
Wire cross section	[mm²]	0
max. current per wire	[A]	0.5
max. total current	[A]	0.5

Socket angular M16

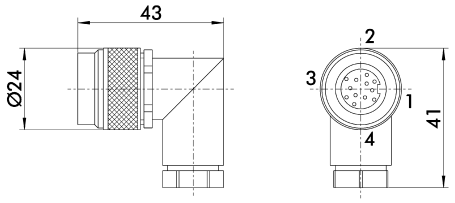

Plug straight M16

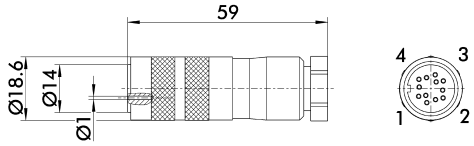

Reliable. Compact. Flexible.

KV Cable Extension

The SCHUNK KV cable extensions are perfectly suitable for supplying SCHUNK components and for leading signals

Field of Application

Cable extensions are used where electric connections between two components should be done without cable assembly

Advantages – Your benefit

Pre-assembled cable easy and fast wiring, without tool

Standard plug connector for universal application

Options and special Information

Compatibility: Can be troublefree combined with SCHUNK sensors, actuators, and sensor distributors.

Application example

① **KST Cable Connector**

② **Cable Extensions**

③ **Sensor Distributor**

④ **MMS Magnetic Switch**

⑤ **DDF 2 Rotary Feed-through**

⑥ **PGN-plus Universal Gripper**

SCHUNK offers more ...

The following components make the product KV even more productive – the suitable addition for the highest functionality, flexibility, reliability, and controlled production.

Sensor Distributor

EGP Electric Parallel Gripper

CLI Connector Clip

MMS 22 Sensor

ⓘ Further information regarding the products can be found on the following product pages or at www.schunk.com. Please contact us for further information: SCHUNK technical hotline +49-7133-103-2696

CAD data, operating manuals and other current product documents are available at **www.schunk.com**

KV M8

Accessories | Cables, Connectors, and Distributors | Cable Extension

Technical data

Description		KV BG08-SG08 3P-0050	KV BG08-SG08 3P-0100	KV BW08-SG08 3P-0030-PNP	KV BW08-SG08 3P-0100-PNP	KV BW08-SG08 3P-0200-PNP
ID		0301598	0301599	0301495	0301496	0301497
Connection sensor side		Connector	Connector	Connector	Connector	Connector
Thread sensor sided		M8	M8	M8	M8	M8
Angled connector, sensor side	[°]	0	0	90	90	90
Connection electric cabinet sided		Connector	Connector	Connector	Connector	Connector
Thread electric cabinet sided		M8	M8	M8	M8	M8
Angle electric cabinet sided	[°]	0	0	0	0	0
Cable length	[m]	0.5	1	0.3	1	2
Number of wires		3	3	3	3	3
Wire cross section	[mm²]	0.14	0.14	0.14	0.14	0.14
Weight	[kg]	0.04	0.05	0.02	0.04	0.06
max. current per wire	[A]	0.5	0.5	0.5	0.5	0.5
max. total current	[A]	0.5	0.5	0.5	0.5	0.5

KV M8 socket angular

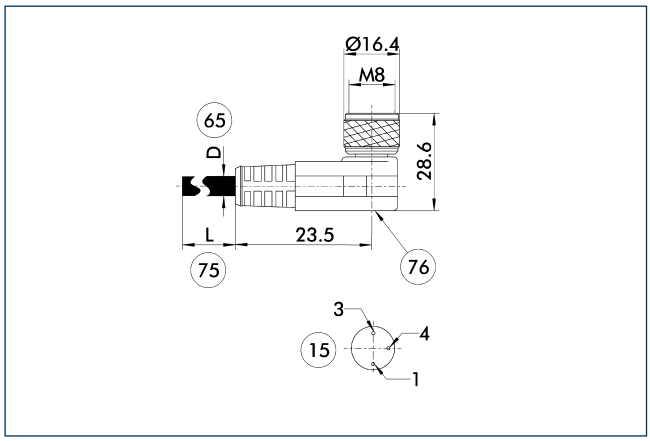

(15) Socket
(65) Cable diameter
(75) Cable length
(76) LED

KC M8 plug straight

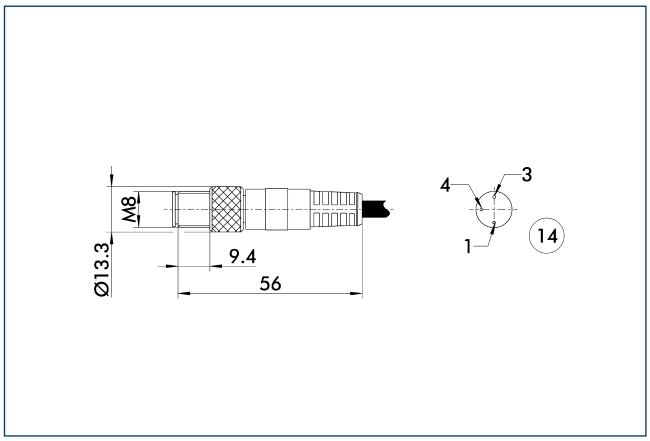

(14) Connector

KA BG08-L 3P main view

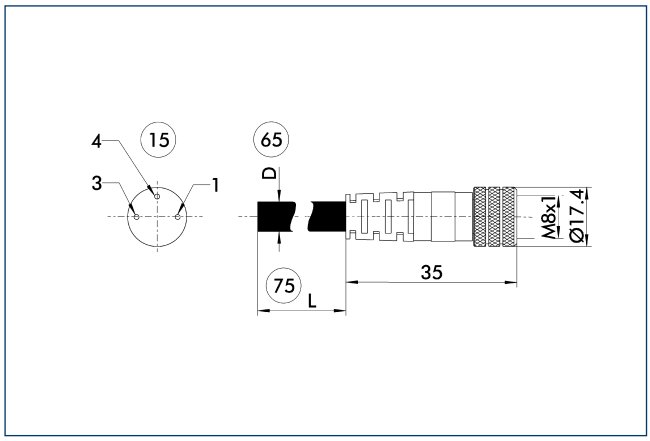

(15) Socket
(65) Cable diameter
(75) Cable length

Technical data

Description		KV BG12-SG12 3P-0030-PNP	KV BG12-SG12 3P-0060-PNP	KV BW12-SG12 3P-0030-PNP	KV BW12-SG12 3P-0100-PNP	KV BW12-SG12 3P-0200-PNP
ID		0301999	0301998	0301595	0301596	0301597
Connection sensor side		Socket	Socket	Socket	Socket	Socket
Thread sensor sided		M12	M12	M12	M12	M12
Angled connector, sensor side	[°]	0	0	90	90	90
Connection electric cabinet sided		Connector	Connector	Connector	Connector	Connector
Thread electric cabinet sided		M12	M12	M12	M12	M12
Angle electric cabinet sided	[°]	0	0	0	0	0
Cable length	[m]	0.3	0.6	0.3	1	2
Number of wires		3	3	3	3	3
Wire cross section	[mm²]	0.14	0.14	0.14	0.14	0.14
Weight	[kg]	0.04	0.05	0.05	0.08	0.13
max. current per wire	[A]	0.5	0.5	0.5	0.5	0.5
max. total current	[A]	0.5	0.5	0.5	0.5	0.5

KV M12 socket angular

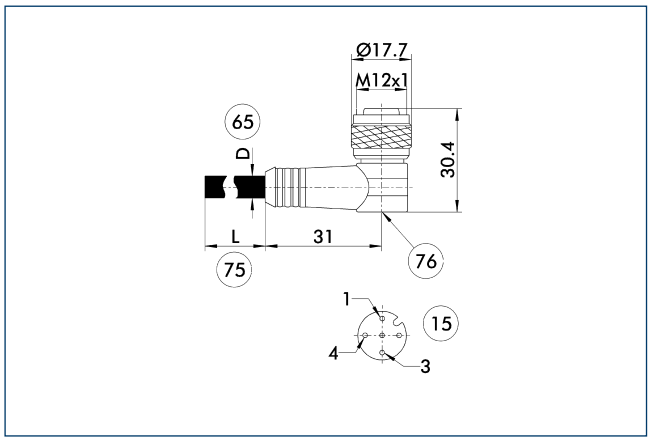

(15) Socket
(65) Cable diameter
(75) Cable length
(76) LED

KV M12 socket straight

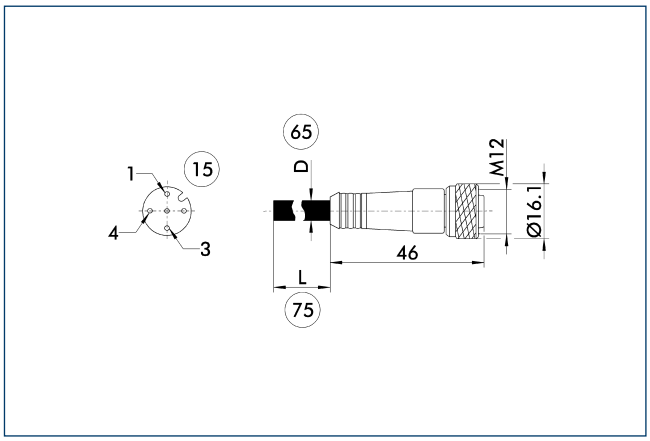

(15) Socket
(65) Cable diameter
(75) Cable length

KV M12 plug straight

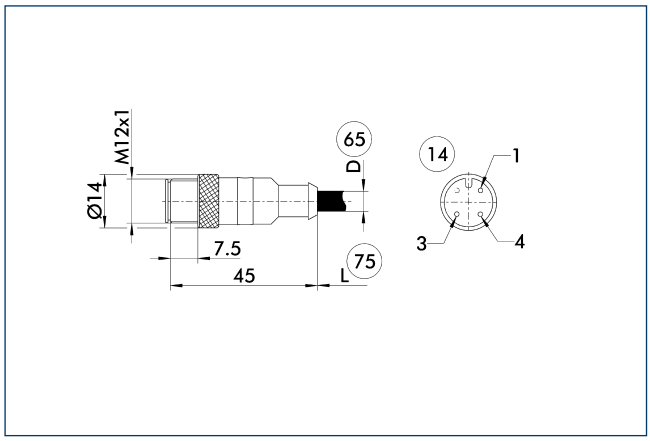

(14) Connector
(65) Cable diameter
(75) Cable length

Easy. Flexible. Compact.

V Sensor Distributor

For connection of all SCHUNK sensors and sensor systems (IN / INK/ MMS / APS-Z80/ etc.). Versions 2-fold (V2), 4-fold (V4), and 8-fold (V8)

Field of Application

Sensor distributors from SCHUNK are all-rounders, insensitive against vibrations, dust and humidity. They are suitable for applications in clean and dirty environments.

Advantages – Your benefit

Operating display and shift indicator by LED for direct control of the switching status

A feed line therefore it is ideal for signal feed-through

Robust PA housing for a long service lifetime and resistance against many chemicals

Options and special Information

Protection class as per DIN 40050: IP67 in plugged position for the use in clean or dusty environments or if contact with water is given. Functionability in case of contact with other mediums (coolant, acids, bases, etc.) is often given, however cannot be guaranteed by SCHUNK.

Application example

① **V8 Sensor Distributor**

② **SRU-plus Rotary Actuator**

③ **PHE Stroke Module**

④ **PGN-plus Universal Gripper with workpiece-specific gripper fingers**

SCHUNK offers more ...

The following components make the product Sensor Distributor even more productive – the suitable addition for the highest functionality, flexibility, reliability, and controlled production.

Cable Connector
KBU / KST

MMS 22 Sensor

Sensor Cables

EGP Electric Parallel
Gripper

ⓘ Further information regarding the products can be found on the following product pages or at www.schunk.com. Please contact us for further information: SCHUNK technical hotline +49-7133-103-2696

CAD data, operating manuals and other current product documents are available at **www.schunk.com**

Sensor Distributor Y

Technical data

Description		V2-M8-4P-2XM8-3P
ID		0301380
Connection socket		M8
Cable length	[mm]	37
Nominal voltage	[V]	30
max. total current	[A]	4
min. / max. ambient temperature	[°C]	-25/80

V2-M8-4-2xM8-3 main view

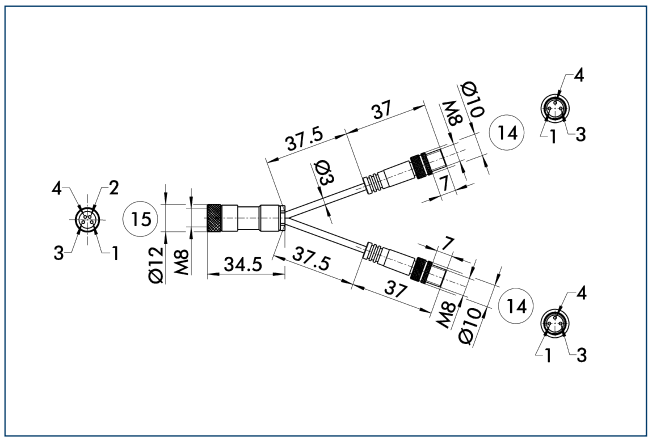

14 Connector 15 Socket

V2 Sensor Distributor

Technical data

Description		V2-M8	V2-M12
ID		0301775	0301776
Connection socket		M8	M12
Cable length	[m]	3	3
Cable diameter	[mm]	4.5	4.5
Nominal voltage	[V]	24	24
min. voltage	[V]	10	10
max. voltage	[V]	30	30
max. current per wire	[A]	2	2
max. total current	[A]	2	2
min. / max. ambient temperature	[°C]	-5/70	-5/70

V2-M8 main view

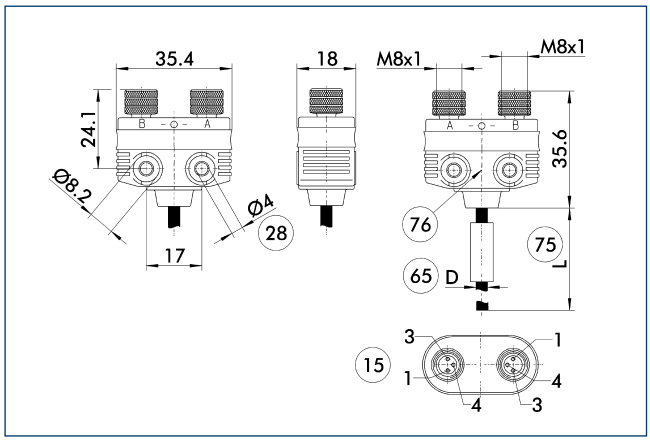

(15) Socket
(28) Through-bore
(65) Cable diameter
(75) Cable length
(76) LED

V2-M12 main view

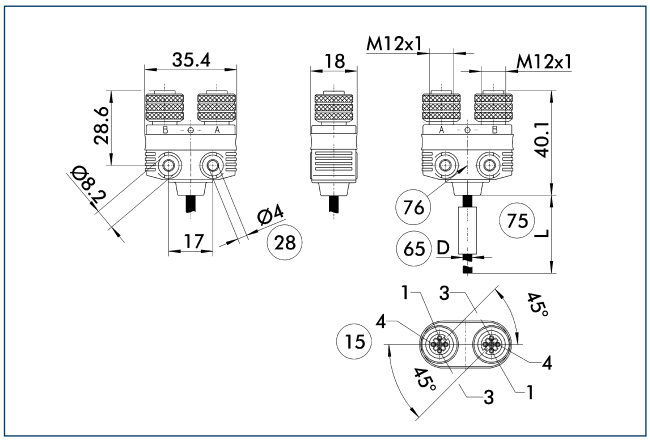

(15) Socket
(28) Through-bore
(65) Cable diameter
(75) Cable length
(76) LED

V4 Sensor Distributor

Technical data

Description		V4-M5	V4-M8	V4-M8-M12 PRH	V4-M12
ID		0301661	0301746	0301755	0301747
Connection socket		M5	M8	M8	M12
Cable length	[m]	5	5	5	5
Cable diameter	[mm]	5	7	7	8.4
Nominal voltage	[V]	24	24	24	24
min. voltage	[V]	30	30	30	30
max. voltage	[V]	10	10	10	10
max. current per wire	[A]	2	2	2	2
max. total current	[A]	2	2	2	2

V4-M5 main view

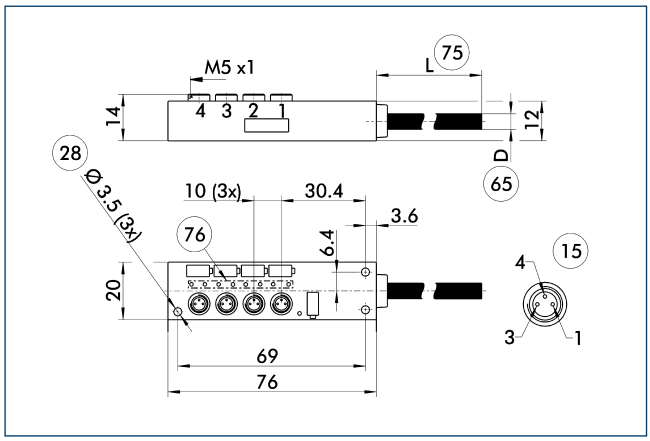

(15) Socket
(28) Through-bore
(65) Cable diameter
(75) Cable length
(76) LED

V4-M8 main view

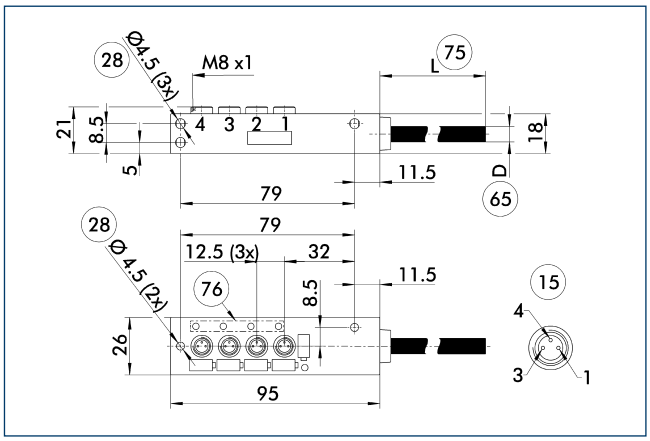

(15) Socket
(28) Through-bore
(65) Cable diameter
(75) Cable length
(76) LED

V4-M12 main view

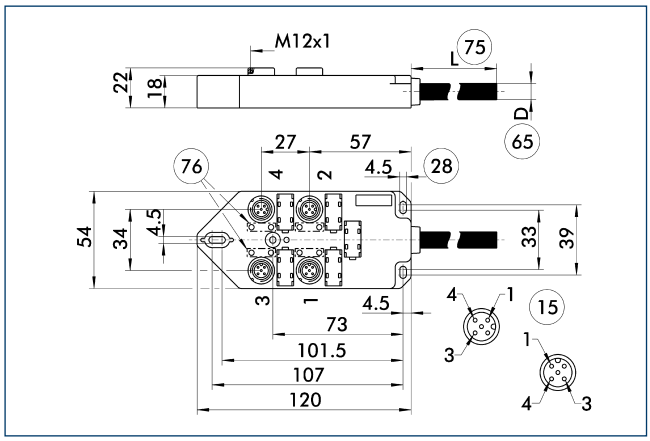

(15) Socket
(28) Through-bore
(65) Cable diameter
(75) Cable length
(76) LED

V4-M8 PRH main view

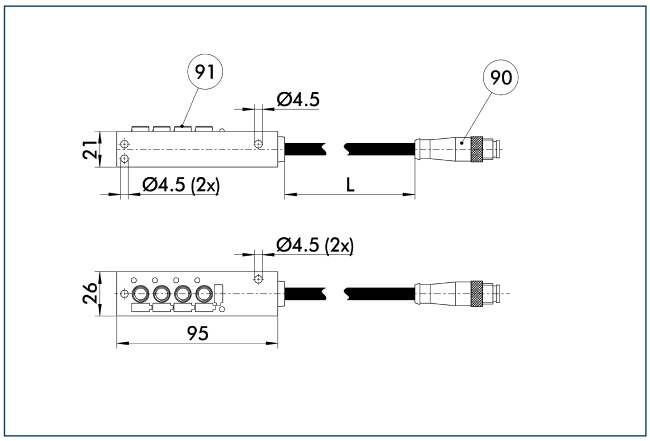

(90) Connection of the PRH module via M12/12-pole plug connector
(91) Sensor connection M8 (4x)

The PRH distributor box can be directly connected to PRH. Four sensors with 3 pins/M8 plug can be connected.

V8 Sensor Distributor

Technical data

Description		V8-M5	V8-M8	V8-M12
ID		0301662	0301751	0301752
Connection socket		M5	M8	M12
Cable length	[m]	5	5	5
Cable diameter	[mm]	6.5	9.5	9.5
Nominal voltage	[V]	24	24	24
min. voltage	[V]	10	10	10
max. voltage	[V]	30	30	30
max. current per wire	[A]	2	2	2
max. total current	[A]	2	2	2

V8-M5 main view

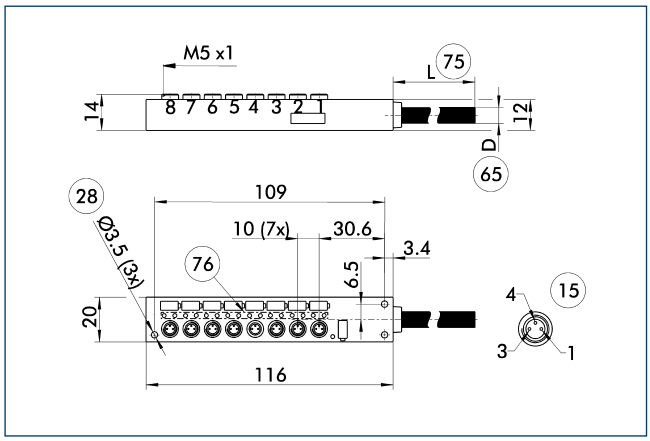

(15) Socket
(28) Through-bore
(65) Cable diameter
(75) Cable length
(76) LED

V8-M8 main view

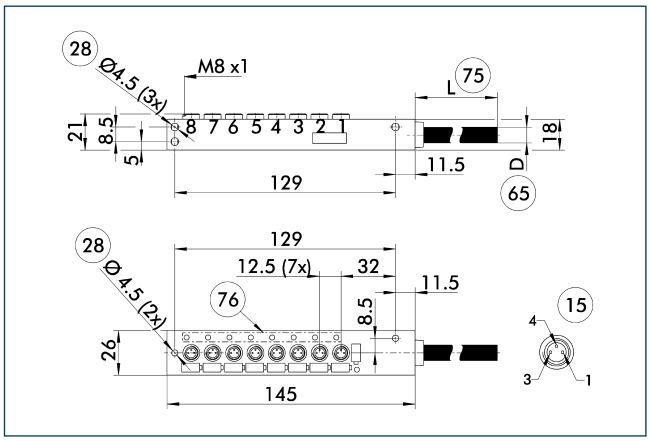

(15) Socket
(28) Through-bore
(65) Cable diameter
(75) Cable length
(76) LED

V8-M12 main view

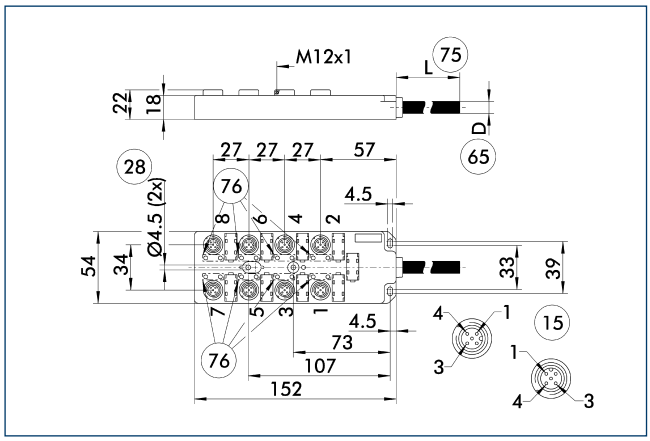

(15) Socket
(28) Through-bore
(65) Cable diameter
(75) Cable length
(76) LED

Powerful. Easy. Bus Capable.

ECM Controller

Electrical controllers are used to control / regulate mechatronic modules and systems without integrated electronics. SCHUNK offers them for EGN / EZN / EVG grippers and ERS rotary modules

Field of Application

Application in a clean environment in connection with the corresponding SCHUNK grippers or rotary modules

Advantages – Your benefit

High accuracy and flexibility

SCHUNK MTS Motion Tool start-up software for positioning processes with highly accurate positioning or exact force / torque control

Field bus communication for Profibus-DP and CAN for simple and fast configuration

USB service interfaces for flexible integration into existing systems

Normal connecting technology and spring clamps for simple and quick parameterization via USB stick and start-up via PC

Rotary encoding switch and DIP switch for convenient and industry-suitable start-up

Options and special Information

Optional safety functions for SCHUNK grippers: SCHUNK ECS safety controller offers the functions STO (Safe Torque Off), SLS (Safe Limited Speed), and SOS (Safe Operating Stop)

Various bus systems can be selected: Profibus, CAN or Profinet

Digital inputs / outputs on option: On option, the controller can be equipped with 4 digital inputs or 4 digital outputs (HTL).

Functional Description

The ECM controller is an electronic module, which is used to control / regulate the mechatronic modules.

① **Status Display**

② **Service Interfaces**

③ **Rotary Encoding Switch**

④ **DIP Switch**

⑤ **M12-plug Technology**

⑥ **Spring**

SCHUNK offers more ...

The following components make the product ECM even more productive – the suitable addition for the highest functionality, flexibility, reliability, and controlled production.

EGN Electric 2-Finger Parallel Gripper

EZN Universal Gripper

ERS Torque Motor

ECS Safety Module

ⓘ Further information regarding the products can be found on the following product pages or at www.schunk.com. Please contact us for further information: SCHUNK technical hotline +49-7133-103-2696

CAD data, operating manuals and other current product documents are available at **www.schunk.com**

Order example ECM for ERS 135

ECM - ERS 135 - B - PB - N

Controller type
ECM

Module type
EGN 080, EGN 100, EGN 160
EZN 064, EZN 100
ERS 135, ERS 170, ERS 210

Options (ERS only)
B = Brake
DDF = Rotary feed-through
B-DDF = Brake and rotary feed-through

Communication type
PB = Profibus
CN = CAN

I/O add-on card
N = not used
I = 4 inputs/4 outputs

Order example ECM for EGN 080

ECM - EGN 080 - CN - I

Controller type
ECM

Module type
EGN 080, EGN 100, EGN 160
EZN 064, EZN 100
ERS 135, ERS 170, ERS 210

Communication type
PB = Profibus
CN = CAN

I/O add-on card
N = not used
I = 4 inputs/4 outputs

How to find the right ECM controller

Step 1

Choosing the module type to be operated, in the required size

Choose from the SCHUNK mechatronic modules

- EGN 2-finger parallel gripper, sizes 080, 100 and 160
- EZN 3-finger centric gripper, sizes 064 and 100
- ERS rotary module, sizes 135, 170 and 210

Enter the product designation with the corresponding size.

Step 1a

For SCHUNK ERS only. Selection options

Choose from the following options for the SCHUNK ERS

- Brake = B
- Rotary feed-through = DDF
- Brake and rotary feed-through = B-DDF

Enter the corresponding abbreviation.

Step 2

Choosing the bus system

Enter the corresponding abbreviation for the communication type

- Profibus = PB
- CAN Bus = CN

Step 3

Choosing the option for digital inputs/outputs

Choose from the following

- Not used = N
- 4 inputs/4 outputs = I

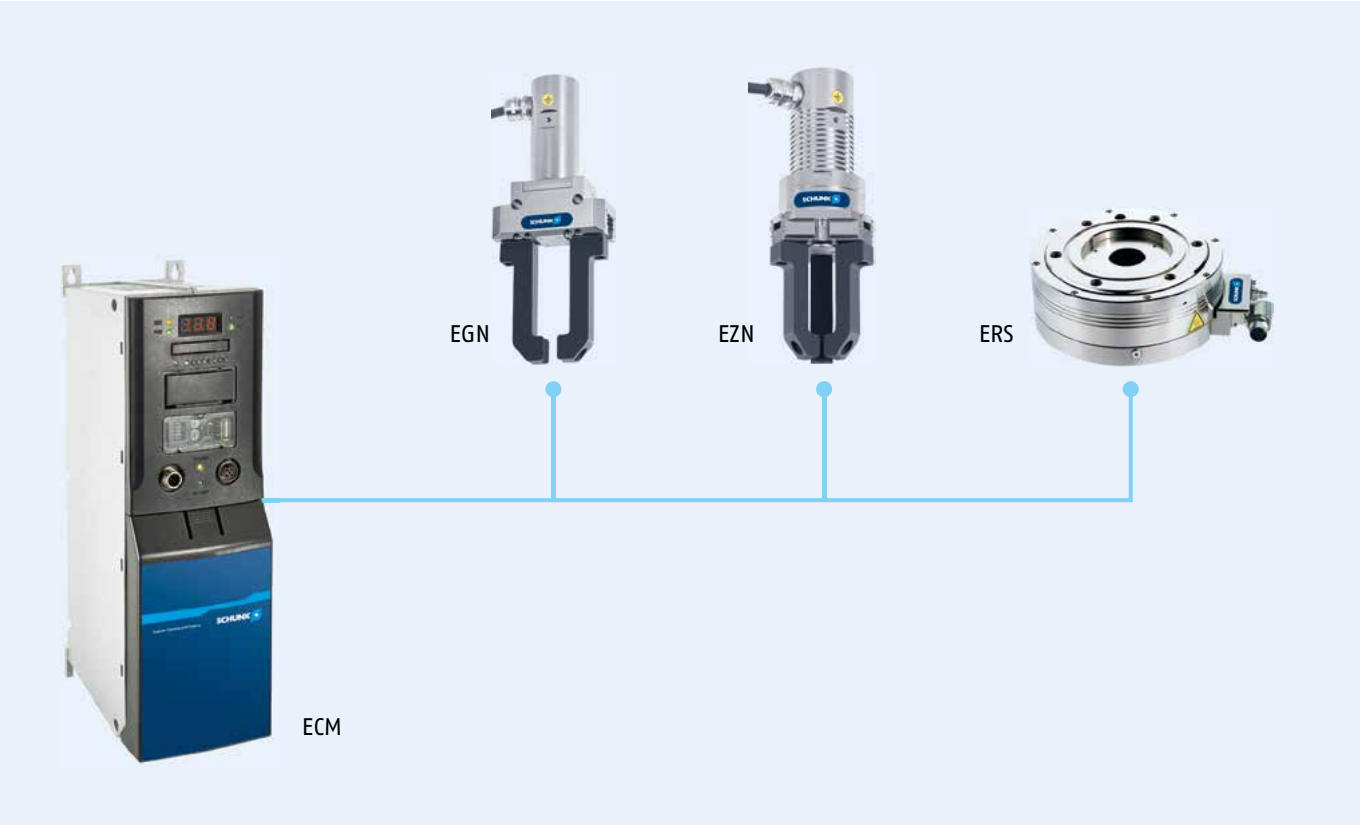

Technical data

Description		ECM-EGN	ECM-EZN	ECM-ERS
Power supply (logic)	[V]	24	24	24
Power supply (load)	[V]	24	24	48
Nominal current	[A]	15	15	15
Length	[mm]	144	144	144
Width	[mm]	98	98	98
Height	[mm]	310	310	310
Weight	[kg]	1	1	1

ⓘ These are the data of the basic variants. In order to determine your ordering code, please see the configuration example. If you should have questions, please contact our technical sales department at www.schunk.com

ECM motor controller

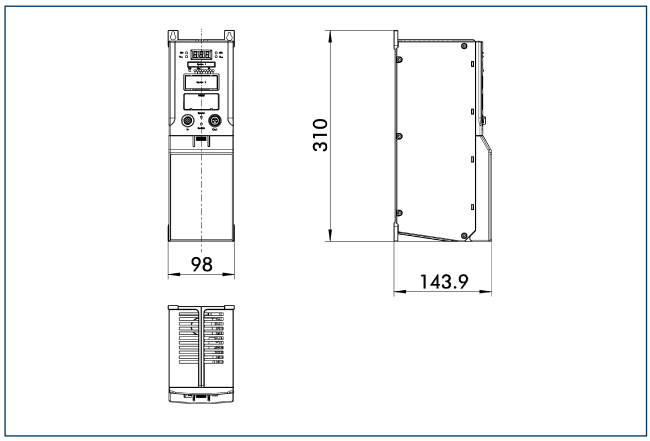

The ECM is required for operating the ERS rotary module (48 V) and the EGN, EZN and EVG electric grippers.

Precise. Compact. Easy assembly.

ZHU / ZH / RMZ / LMZL Centering Element

Centering sleeves are used for centering between two elements. With SCHUNK grippers, this frequently occurs between the mounting plate and gripper and between the gripper and gripper fingers

Field of Application

Variable centering tasks for gripper and rotary modules, as well as linear modules

Advantages – Your benefit

Space-saving for small, compact grippers

Precise for high repeat accuracy

Economical for low costs

Easy to install for fast assembly

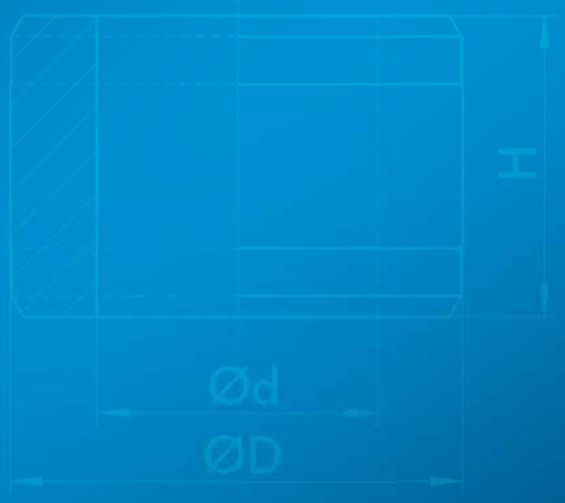

Applications

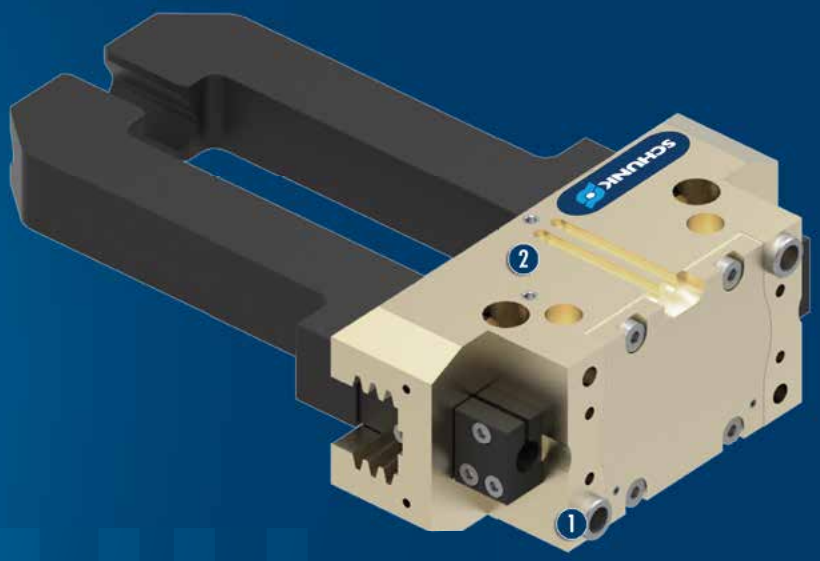

① ZHU Centering Sleeves

② PGN-plus Universal Gripper

SCHUNK offers more ...

The following components make the product centering element even more productive – the suitable addition for the highest functionality, flexibility, reliability, and controlled production.

PGN-plus Universal Gripper

SRU-plus Flat Swivel Unit

Adapter Plate

ⓘ Further information regarding the products can be found on the following product pages or at www.schunk.com. Please contact us for further information: SCHUNK technical hotline +49-7133-103-2696

CAD data, operating manuals and other current product documents are available at **www.schunk.com**

ZHU Centering Element

Accessories | Fastening Elements | Centering Element

Technical data

Description		ZH 500	ZH 600	ZH 700	ZHU 2	ZHU 2,5	ZHU 3
ID		0313399	0313367	0313368	9941547	9941628	9941629
Ø D	[mm]	5	6	7	2	2.5	3
Ø d	[mm]	3.2	4.4	5.4	1.3	1.7	2.1
H	[mm]	2.5	2.5	2.5	1.95	1.95	1.95

Description		ZHU 3,5	ZHU 4	ZHU 5	ZHU 6	ZHU 8	ZHU 10
ID		9939947	9939376	9939377	9939384	9939378	9939379
Ø D	[mm]	3.5	4	5	6	8	10
Ø d	[mm]	2.1	2.6	3.1	4.1	5.1	6.2
H	[mm]	2.95	3.95	4.35	5.35	5.35	6.65

Description		ZHU 12	ZHU 14	ZHU 16	ZHU 22	ZHU 28
ID		9939380	9939381	9939382	9939383	9941220
Ø D	[mm]	12	14	16	22	28
Ø d	[mm]	8.2	10.2	12.2	16.2	21
H	[mm]	6.65	8.6	8.6	13.6	17.6

ZHU main view

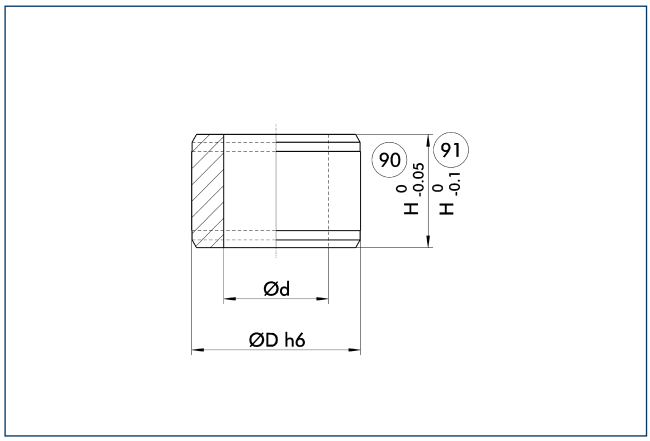

90 Ød1,3 – Ød8,2 91 Ød10,2 – Ød21

You can find the variable dimensions in the technical data table.

RMZ Centering Element

Accessories | Fastening Elements | Centering Element

Technical data

Description		RMZ 12	RMZ 50	RMZ 110	RMZ 200
ID		0313360	0313361	0313362	0313363
Ø D	[mm]	20.03	14.03	16.03	20.03
H	[mm]	0.7	2	2	2

RMZ main view

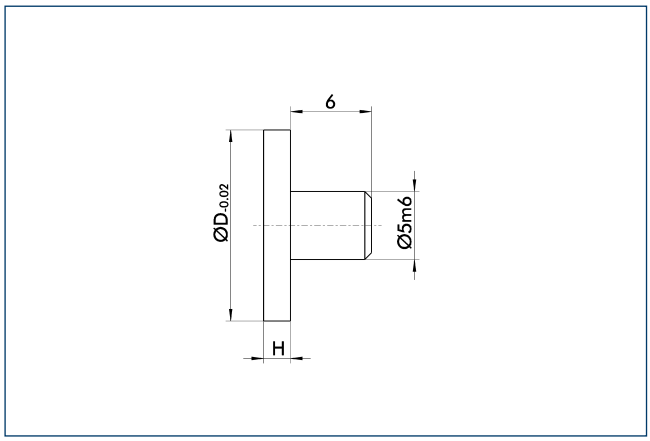

You can find the variable dimensions in the technical data table.

LMZL Centering Element

Accessories | Fastening Elements | Centering Element

Technical data

Description		LMZL 50	LMZL 100
ID		0314211	0314212
A	[mm]	40	55
B	[mm]	3	5
C	[mm]	15	18
D	[mm]	18	26

LMZL main view

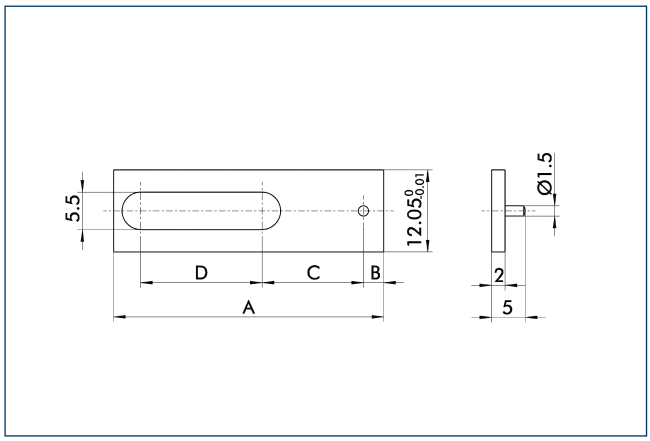

You can find the variable dimensions in the technical data table.

Productive. Flexible. Cost effective.

BSWS Jaw Quick-change System

The BSWS jaw quick-change system enables top jaws to be changed on the gripper manually and rapidly. An adapter (BSWS-A) and a base (BSWS-B) are required for each gripper jaw. For a reverse assembly without height set-up, one adapter (BSWS-AR) and a kit (BSWS-UR) per gripper jaw are required. Another effect of the BSWS-UR is, that there are no disturbing fastening bores in the finger contour

Field of Application

For handling of various components or frequent retrofitting of automated production lines in clean to dirty environments. Caution: The locking surfaces must keep free of grease and oil!

Advantages – Your benefit

Universal application possibilities, by using the BSWS, just one single gripper is necessary for various applications

Manual jaw change via locking mechanics easy and fast for a high gripper flexibility

Firm up to the maximum loadability of the base jaws by safe adaption and connection with screws

Alternative possibility of inserting the locking bolt into the base jaws, the exchangabilty and free choice of jaw design has no impact onto the infering contours.

Options and special Information

BSWS-UR: Reversed assembly without additional height: If the additional attachment height of the BSWS system should have a negative impact, it is possible to fasten the BSWS adapter BSWS-AR in the base jaws of the gripper with screws. Then the changing system is more compact in height. The locking mechanism will be integrated into the top jaw.

As another effect, there are no disturbing fastening bores at your finger contour. Please contact us for discussing this matter.

BSWS-ABR-SBR: Top jaw blanks with integrated jaw quick-change system

Functional Description

The BSWS consists of a base, which is stationary fixed with the gripper, and two adapter pins, which are to be fastened at the top jaw, which is to be exchanged.

The form-fit locking mechanics assures a fast exchange of the gripper fingers.

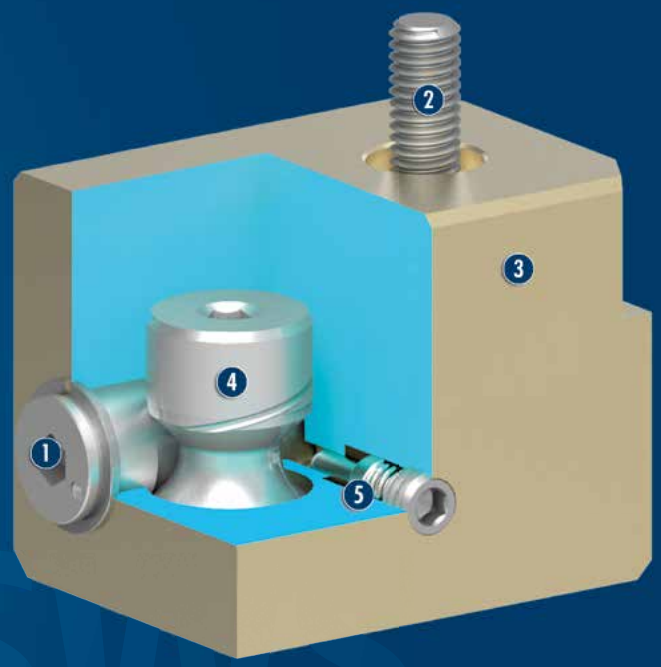

① **Locking Mechanism**
powerful and rigid by positive locking

② **Fastened with screws**
towards the gripper base jaw

③ **BSWS-B Base**
the jaw quick-change system

④ **Adapter Plate with BSWS-A**
to be fastened at the top jaws which will be changed

SCHUNK offers more ...

The following components make the product BSWS even more productive – the suitable addition for the highest functionality, flexibility, reliability, and controlled production.

PGN-plus 2-Finger Parallel Gripper

PZN-plus 3-Finger Centric Gripper

EGN Universal Gripper

Jaw Blanks

ⓘ Further information regarding the products can be found on the following product pages or at www.schunk.com. Please contact us for further information: SCHUNK technical hotline +49-7133-103-2696

CAD data, operating manuals and other current product documents are available at **www.schunk.com**

BSWS-B / -A

Accessories | Jaw Systems | Jaw Quick-change System

Technical data

Description		BSWS-B 50	BSWS-B 64	BSWS-B 80	BSWS-B 100	BSWS-B 125	BSWS-B 160
ID		0303021	0303023	0303025	0303027	0303029	0303031
Weight	[kg]	0.02	0.04	0.08	0.1	0.27	0.48
Jaw quick-change system							
Description		BSWS-A 50	BSWS-A 64	BSWS-A 80	BSWS-A 100	BSWS-A 125	BSWS-A 160
ID		0303020	0303022	0303024	0303026	0303028	0303030
Weight	[kg]	0.002	0.005	0.011	0.024	0.046	0.077
Number of pins per Id.-No.		2	2	2	2	2	2
Material		42CrMo4+QT	42CrMo4+QT	42CrMo4+QT	42CrMo4+QT	42CrMo4+QT	42CrMo4+QT

Description		BSWS-B 200	BSWS-B 240	BSWS-B 300
ID		0303033	0303035	0303037
Weight	[kg]	0.9	1.5	2
Jaw quick-change system				
Description		BSWS-A 200	BSWS-A 240	BSWS-A 300
ID		0303032	0303034	0303036
Weight	[kg]	0.16	0.3	0.41
Number of pins per Id.-No.		2	2	2
Material		42CrMo4+QT	42CrMo4+QT	42CrMo4+QT

ⓘ The evenness in height of the BSWS-B is +/- 0.05 mm and the replacement accuracy of a top jaw in connection with the BSWS-A is +/-0.02 mm.

BSWS jaw quick-change system

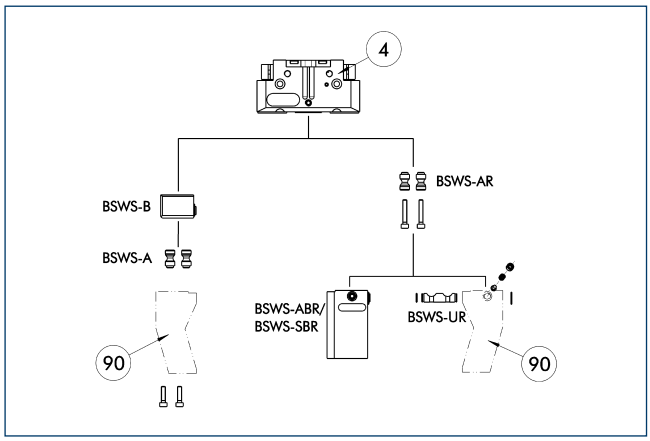

(4) Gripper
(90) Customized gripper fingers

The drawing shows and overview of the BSWS jaw quick-change system's application possibilitites.

BSWS 50 jaw quick-change system

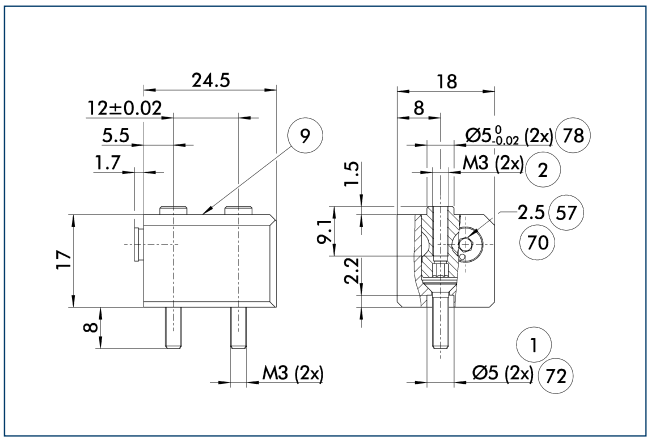

(1) Gripper connection
(2) Finger connection
(9) For mounting screw connection diagram, see basic version
(57) Locking
(70) Wrench size
(72) Fit for centering sleeves
(78) Fitting for centering

The drawing shows the basic design of the jaw quick-change system.

BSWS U 64 jaw quick-change system

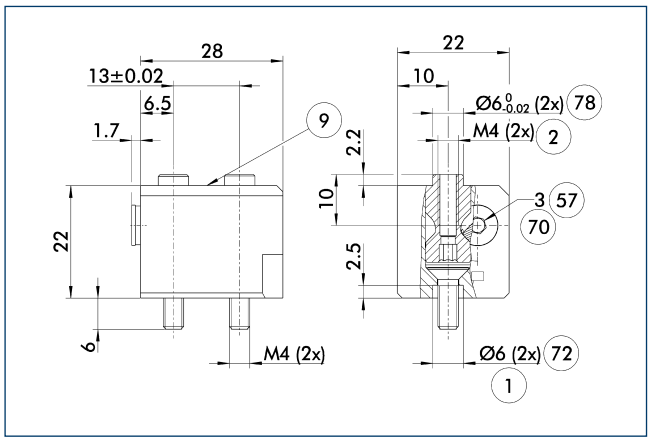

(1) Gripper connection
(2) Finger connection
(9) For mounting screw connection diagram, see basic version
(57) Locking
(70) Wrench size
(72) Fit for centering sleeves
(78) Fitting for centering

The drawing shows the basic design of the jaw quick-change system.

BSWS 80 jaw quick-change system

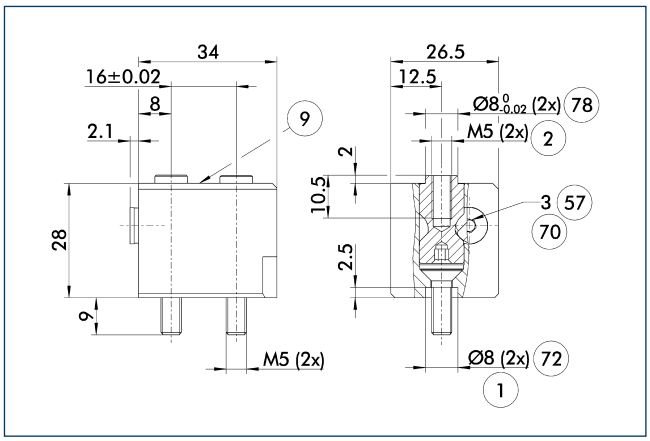

(1) Gripper connection
(2) Finger connection
(9) For mounting screw connection diagram, see basic version
(57) Locking
(70) Wrench size
(72) Fit for centering sleeves
(78) Fitting for centering

The drawing shows the basic design of the jaw quick-change system.

BSWS 100 jaw quick-change system

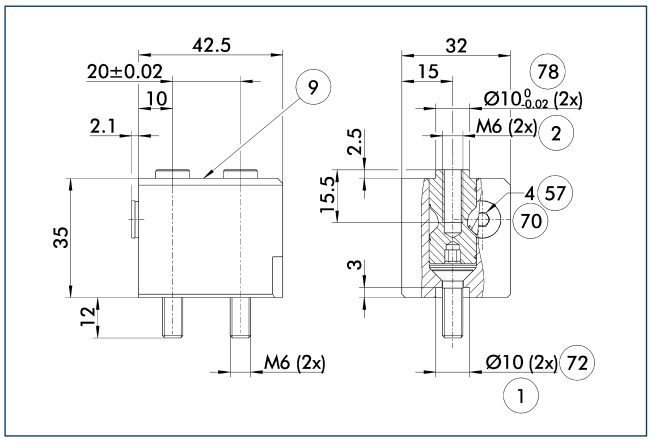

1 Gripper connection
2 Finger connection
9 For mounting screw connection diagram, see basic version
57 Locking
70 Wrench size
72 Fit for centering sleeves
78 Fitting for centering

The drawing shows the basic design of the jaw quick-change system.

BSWS 125 jaw quick-change system

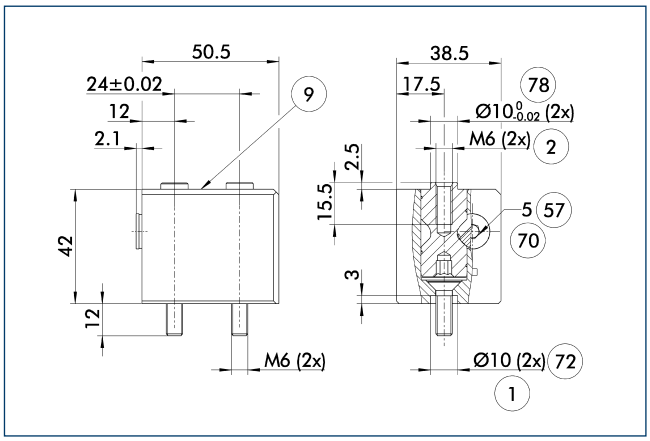

1 Gripper connection
2 Finger connection
9 For mounting screw connection diagram, see basic version
57 Locking
70 Wrench size
72 Fit for centering sleeves
78 Fitting for centering

The drawing shows the basic design of the jaw quick-change system.

BSWS 160 jaw quick-change system

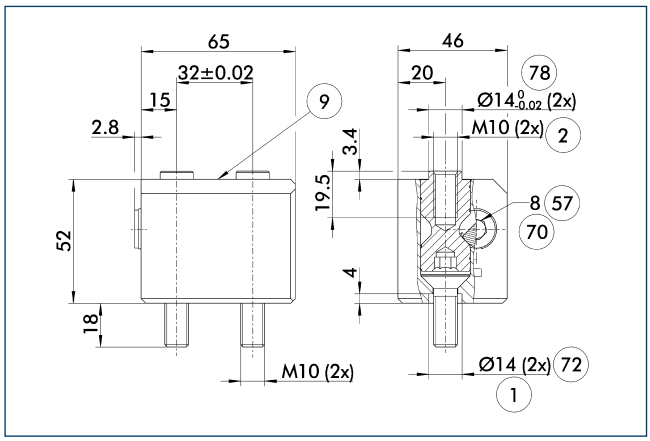

1 Gripper connection
2 Finger connection
9 For mounting screw connection diagram, see basic version
57 Locking
70 Wrench size
72 Fit for centering sleeves
78 Fitting for centering

The drawing shows the basic design of the jaw quick-change system.

BSWS 200 jaw quick-change system

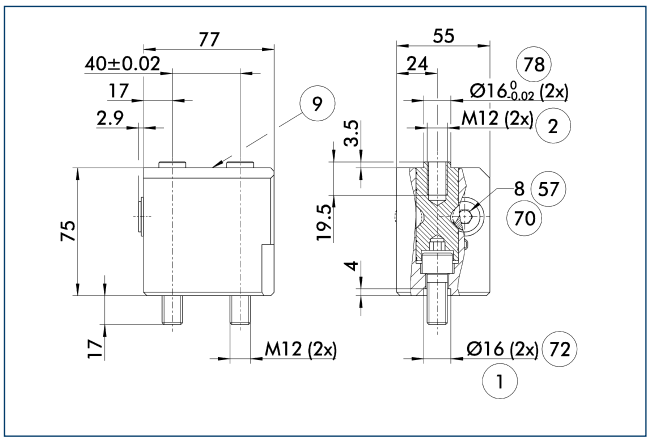

1 Gripper connection
2 Finger connection
9 For mounting screw connection diagram, see basic version
57 Locking
70 Wrench size
72 Fit for centering sleeves
78 Fitting for centering

The drawing shows the basic design of the jaw quick-change system.

BSWS 240 jaw quick-change system

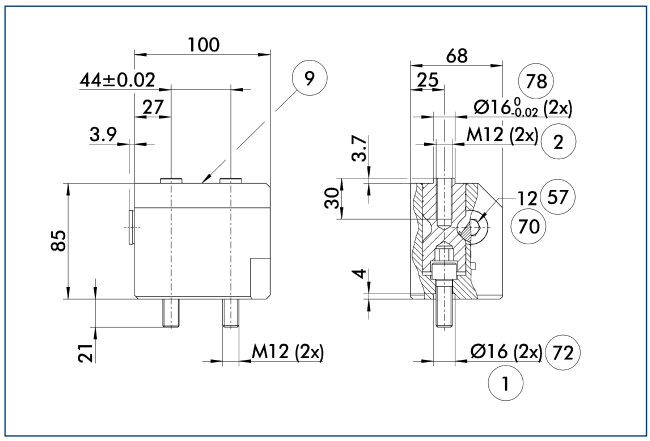

1 Gripper connection
2 Finger connection
9 For mounting screw connection diagram, see basic version
57 Locking
70 Wrench size
72 Fit for centering sleeves
78 Fitting for centering

The drawing shows the basic design of the jaw quick-change system.

BSWS 300 jaw quick-change system

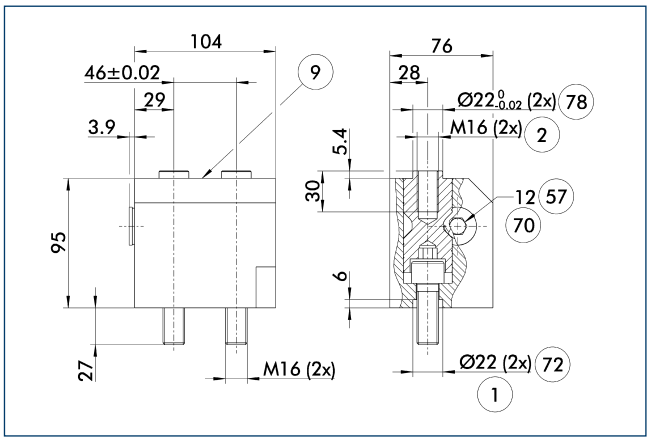

1 Gripper connection
2 Finger connection
9 For mounting screw connection diagram, see basic version
57 Locking
70 Wrench size
72 Fit for centering sleeves
78 Fitting for centering

The drawing shows the basic design of the jaw quick-change system.

BSWS-AR / -UR

Technical data

Description		BSWS-AR 50	BSWS-AR 64	BSWS-AR 80	BSWS-AR 100	BSWS-AR 125	BSWS-AR 160
ID		0300091	0300092	0300093	0300094	0300095	0300096
Weight	[kg]	0.01	0.015	0.03	0.06	0.1	0.19
Jaw quick-change system							
Description		BSWS-UR 50	BSWS-UR 64	BSWS-UR 80	BSWS-UR 100	BSWS-UR 125	BSWS-UR 160
ID		0302990	0302991	0302992	0302993	0302994	0302995
Weight	[kg]	0.006	0.01	0.015	0.027	0.044	0.085

BSWS jaw quick-change system

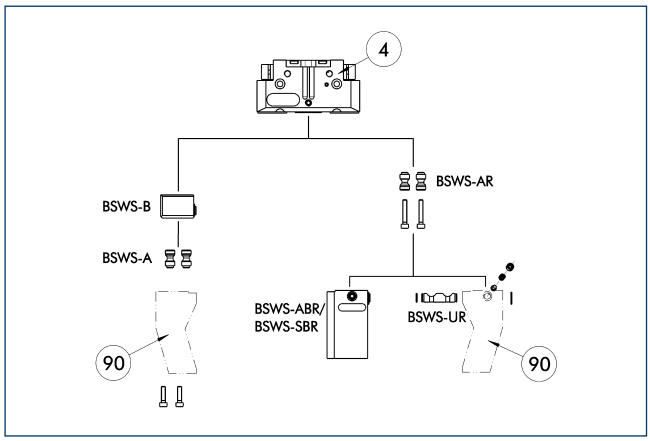

(4) Gripper (90) Customized gripper fingers

The drawing shows and overview of the BSWS jaw quick-change system's application possibilitites.

BSWS-UR 50 jaw quick-change system

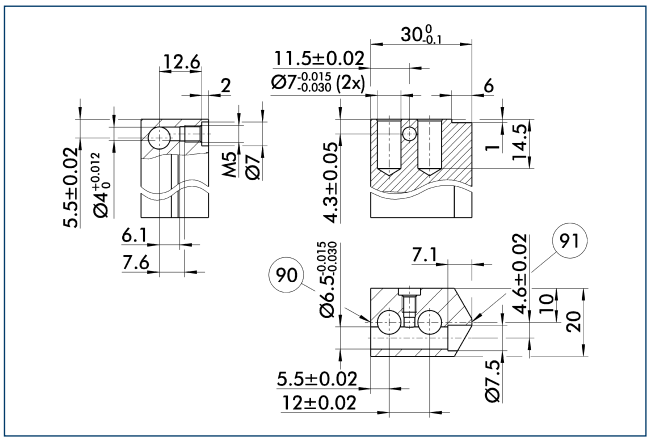

(90) Locking side (91) Side center of the gripper

The locking mechanism for the BSWS-AR should only be installed as shown on the drawing. A mirror-inverted installation e.g. is not working. You will find a three-dimensional CAD template on our website www.schunk.com.

ⓘ The locking mechanism is only included in the scope of delivery. The drawing shows the manufacturing dimensions for the customized fingers. The surfaces should be wear-resistant, for example hard-anodized aluminum.

BSWS-UR 64 jaw quick-change system

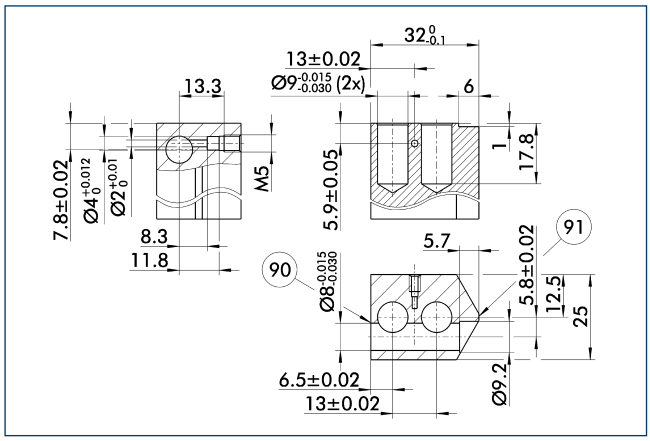

(90) Locking side (91) Side center of the gripper

The locking mechanism for the BSWS-AR should only be installed as shown on the drawing. A mirror-inverted installation e.g. is not working. You will find a three-dimensional CAD template on our website www.schunk.com.

ⓘ The locking mechanism is only included in the scope of delivery. The drawing shows the manufacturing dimensions for the customized fingers. The surfaces should be wear-resistant, for example hard-anodized aluminum.

BSWS-UR 80 jaw quick-change system

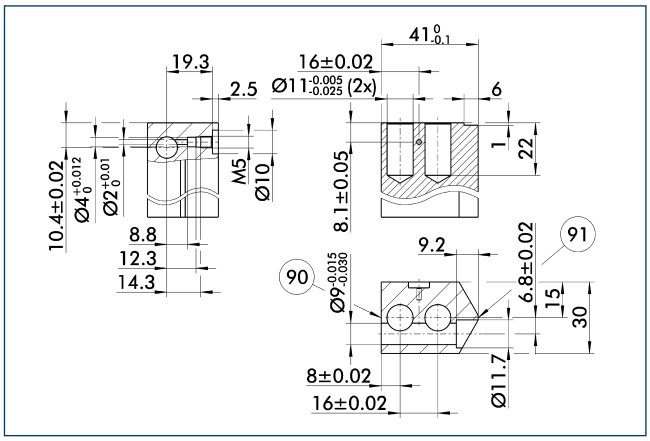

(90) Locking side (91) Side center of the gripper

The locking mechanism for the BSWS-AR should only be installed as shown on the drawing. A mirror-inverted installation e.g. is not working. You will find a three-dimensional CAD template on our website www.schunk.com.

ⓘ The locking mechanism is only included in the scope of delivery. The drawing shows the manufacturing dimensions for the customized fingers. The surfaces should be wear-resistant, for example hard-anodized aluminum.

BSWS-UR 100 jaw quick-change system

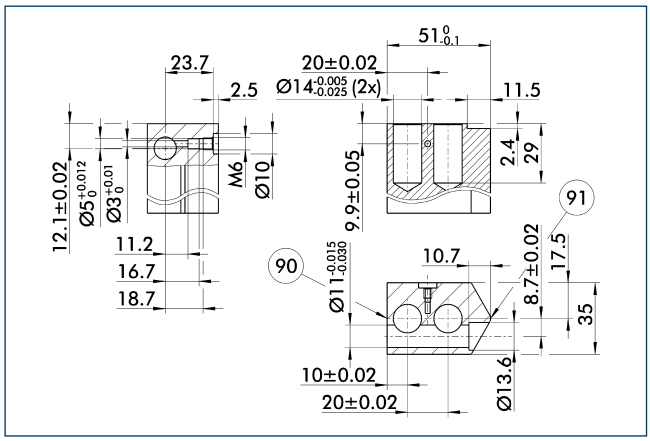

90 Locking side 91 Side center of the gripper

The locking mechanism for the BSWS-AR should only be installed as shown on the drawing. A mirror-inverted installation e.g. is not working. You will find a three-dimensional CAD template on our website www.schunk.com.

ⓘ The locking mechanism is only included in the scope of delivery. The drawing shows the manufacturing dimensions for the customized fingers. The surfaces should be wear-resistant, for example hard-anodized aluminum.

BSWS-UR 125 jaw quick-change system

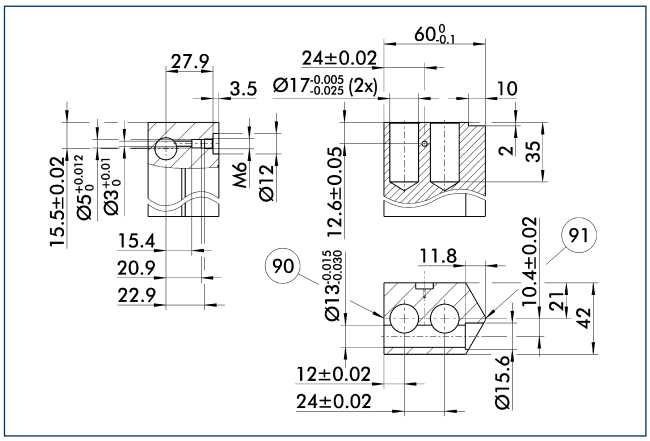

90 Locking side 91 Side center of the gripper

The locking mechanism for the BSWS-AR should only be installed as shown on the drawing. A mirror-inverted installation e.g. is not working. You will find a three-dimensional CAD template on our website www.schunk.com.

ⓘ The locking mechanism is only included in the scope of delivery. The drawing shows the manufacturing dimensions for the customized fingers. The surfaces should be wear-resistant, for example hard-anodized aluminum.

BSWS-UR 160 jaw quick-change system

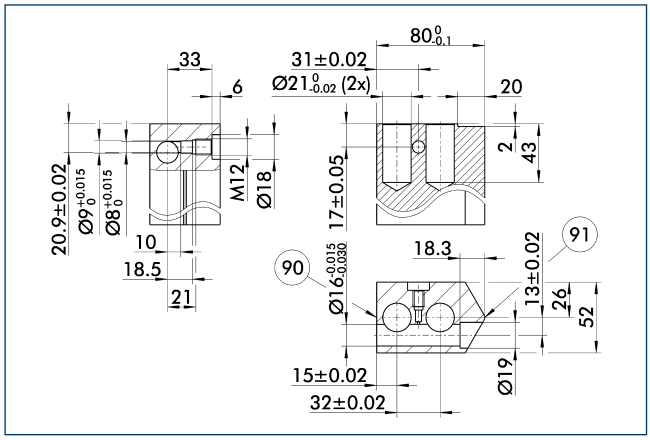

90 Locking side 91 Side center of the gripper

The locking mechanism for the BSWS-AR should only be installed as shown on the drawing. A mirror-inverted installation e.g. is not working. You will find a three-dimensional CAD template on our website www.schunk.com.

ⓘ The locking mechanism is only included in the scope of delivery. The drawing shows the manufacturing dimensions for the customized fingers. The surfaces should be wear-resistant, for example hard-anodized aluminum.

BSWS-ABR- / SBR-PGZN-plus 50 finger blanks

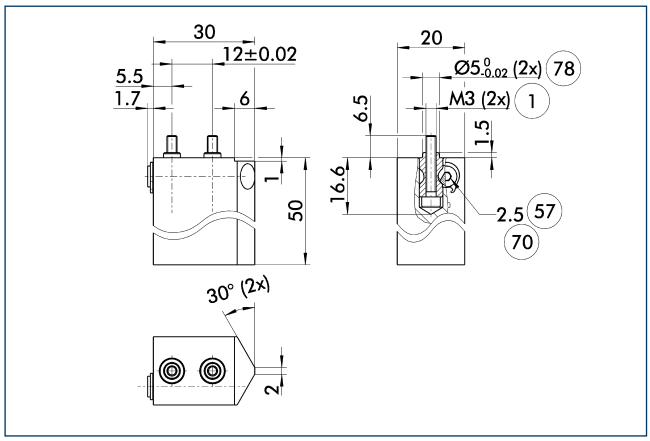

(1) Gripper connection
(70) Wrench size
(57) Locking
(78) Fitting for centering

The drawing shows the finger blanks with jaw quick-change system which can be reworked by the customer.

Description	ID	Material	Scope of delivery
Finger blanks with jaw quick-change system			
BSWS-ABR-PGZN-plus 50	0300071	Aluminum	1
BSWS-SBR-PGZN-plus 50	0300081	16MnCr5	1

BSWS-ABR- / SBR-PGZN-plus 64 finger blanks

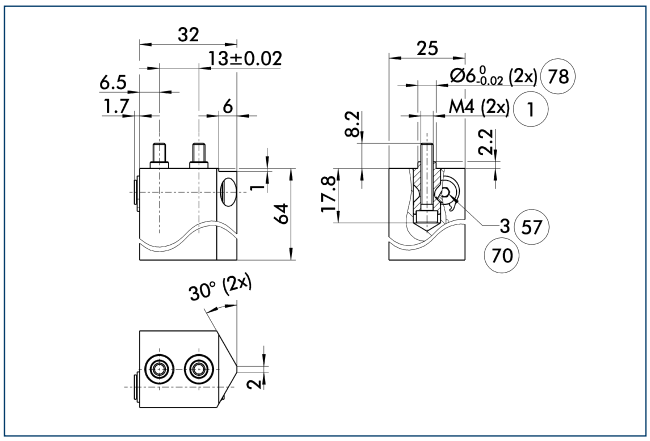

(1) Gripper connection
(70) Wrench size
(57) Locking
(78) Fitting for centering

The drawing shows the finger blanks with jaw quick-change system which can be reworked by the customer.

Description	ID	Material	Scope of delivery
Finger blanks with jaw quick-change system			
BSWS-ABR-PGZN-plus 64	0300072	Aluminum	1
BSWS-SBR-PGZN-plus 64	0300082	16MnCr5	1

BSWS-ABR- / SBR-PGZN-plus 80 finger blanks

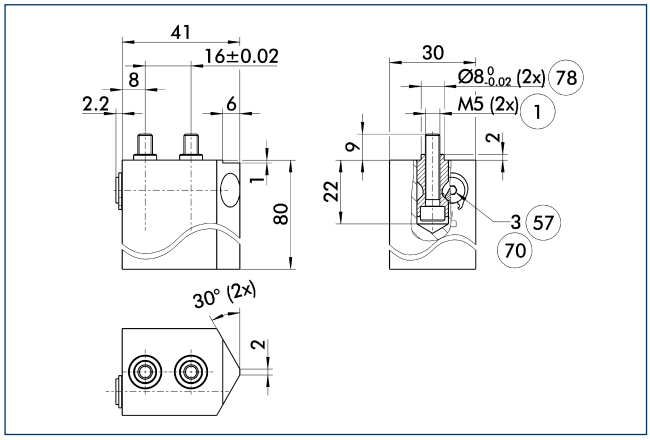

(1) Gripper connection
(70) Wrench size
(57) Locking
(78) Fitting for centering

The drawing shows the finger blanks with jaw quick-change system which can be reworked by the customer.

Description	ID	Material	Scope of delivery
Finger blanks with jaw quick-change system			
BSWS-ABR-PGZN-plus 80	0300073	Aluminum	1
BSWS-SBR-PGZN-plus 80	0300083	16MnCr5	1

BSWS-ABR- / SBR-PGZN-plus 100 finger blanks

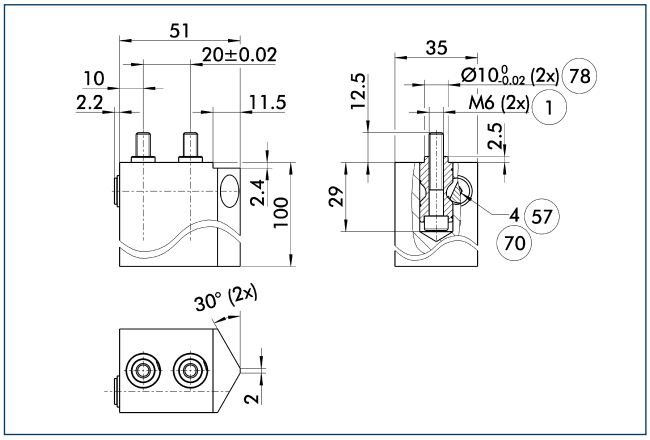

(1) Gripper connection
(70) Wrench size
(57) Locking
(78) Fitting for centering

The drawing shows the finger blanks with jaw quick-change system which can be reworked by the customer.

Description	ID	Material	Scope of delivery
Finger blanks with jaw quick-change system			
BSWS-ABR-PGZN-plus 100	0300074	Aluminum	1
BSWS-SBR-PGZN-plus 100	0300084	16MnCr5	1

BSWS-ABR- / SBR-PGZN-plus 125 finger blanks

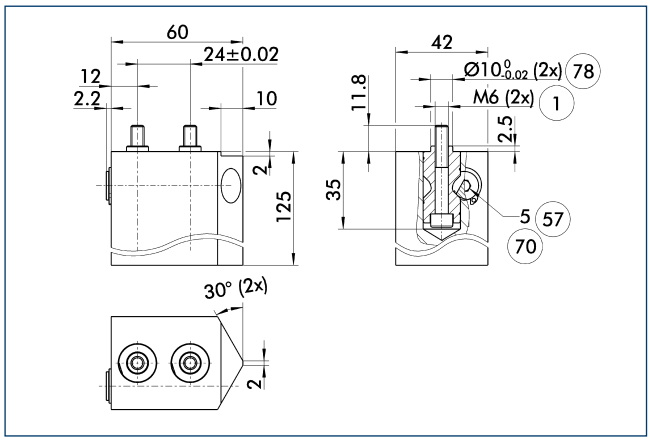

1 Gripper connection
57 Locking
70 Wrench size
78 Fitting for centering

The drawing shows the finger blanks with jaw quick-change system which can be reworked by the customer.

Description	ID	Material	Scope of delivery
Finger blanks with jaw quick-change system			
BSWS-ABR-PGZN-plus 125	0300075	Aluminum	1
BSWS-SBR-PGZN-plus 125	0300085	16MnCr5	1

BSWS-ABR- / SBR-PGZN-plus 160 finger blanks

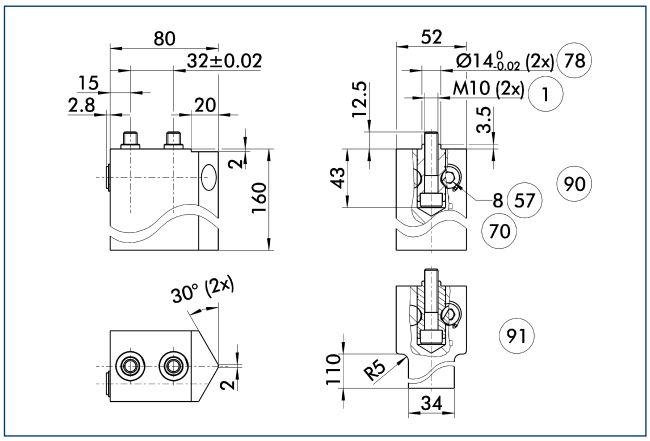

1 Gripper connection
57 Locking
70 Wrench size
78 Fitting for centering
90 ABR
91 SBR

The drawing shows the finger blanks with jaw quick-change system which can be reworked by the customer.

Description	ID	Material	Scope of delivery
Finger blanks with jaw quick-change system			
BSWS-ABR-PGZN-plus 160	0300076	Aluminum	1
BSWS-SBR-PGZN-plus 160	0300086	16MnCr5	1

Reliable. Compact. Safe.

SDV-P Pressure Maintenance Valve

With a loss of air pressure, venting of the module will be prevented by the pressure maintenance valve. Via this valve the grip force or position for various modules can be maintained. This is especially useful for grippers where a mechanical grip force maintence solution is not possible

Field of Application

Use in applications, where temporary force or position maintenance is required, complements grippers, rotary or linear modules.

Advantages – Your benefit

Robust design for long term reliable applications

Well proven in multiple applications of the industrial automation

Quality from the leading expert in clamping technology and gripping systems

Functional Description

Two parallel switched check valves, automatically open the return flow direction and close the pressure line when they are pressurized.

① **Housing**

② **Ventilation Button for Air Connection A**

③ **Ventilation Button for Air Connection B**

④ **Return Spring**

SCHUNK offers more ...

The following components make the product SDV-P even more productive – the suitable addition for the highest functionality, flexibility, reliability, and controlled production.

PGN-plus Universal Gripper

Pneumatic Long Stroke Gripper PHL

SRU-plus Flat Swivel Unit

PZN-plus 3-Finger Universal Gripper

ⓘ Further information regarding the products can be found on the following product pages or at www.schunk.com. Please contact us for further information: SCHUNK technical hotline +49-7133-103-2696

CAD data, operating manuals and other current product documents are available at **www.schunk.com**

SDV-P

Accessories | Valves and Fittings | Pressure Maintenance Valve

Technical data

Description		SDV-P 04	SDV-P 04-E	SDV-P 07	SDV-P 07-E
ID		0403130	0300120	0403131	0300121
Thread		G1/8"	G1/8"	G1/4"	G1/4"
Nominal distance	[mm][µm]	4	4	7	7
Air stream KV	[m³/min][l/min]	16	16	27	27
Rate of flow	[l/min]	200	200	300	300
Operating pressure	[bar]	2/10	2/10	2/10	2/10
min. / max. ambient temperature	[°C]	-10/80	-10/80	-10/80	-10/80
Closing- / opening time	[ms][h]	10	10	10	10
Weight	[kg][g]	0.1	0.1	0.2	0.2
Fast ventilation		without	with	without	with

SDV-P 04 (-E) main view

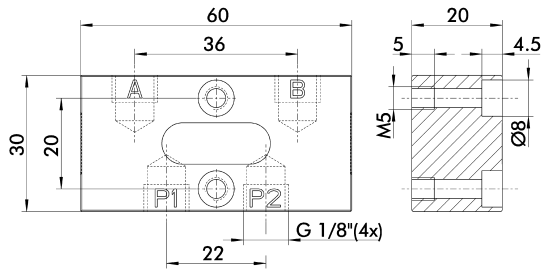

SDV-P 07 (-E) main view

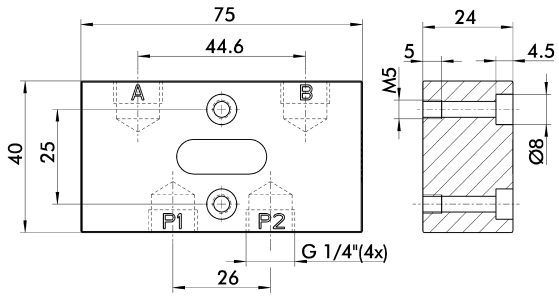

Wiring diagram

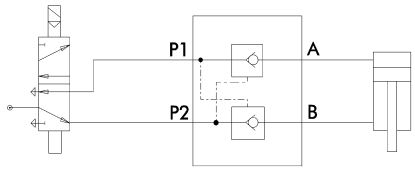

SCHUNK Service

Competent and skilled personnel ensure optimal availability of your SCHUNK products, and make sure that their value will be maintained.

Your advantage:

- Fast supply of original spare parts
- Reduction of down-times
- The complete spectrum of components from one source
- Quality and availability that can only be guaranteed by the original manufacturer
- 12-month warranty

Initial operation

- Professional assembly
- Fast and trouble-free

Inspection

- Inspection is carried out by skilled service engineers
- Avoiding unplanned failures of workholding and toolholding equipment

Maintenance

- Regular maintenance carried out by skilled service engineers
- Increasing and ensuring the availability of your workholding and tool-holding equipment

Repairs

- Short down-times due to fast intervention of the SCHUNK service engineers
- Spare parts and accessories

Training

- Fast and practical training
- Efficient use of your SCHUNK products by training of the operating personnel
- The basis for proper machining of workpieces
- Ensures longevity of your SCHUNK products

Individual service – for better results

- Hotline to our inside technical consultants weekdays from 7 a.m. to 6 p.m.
- Project-oriented and on-site technical advice at your location
- Training on innovations and SCHUNK products – across the world in our local subsidiaries

Online service – for a fast overview

All information in digital form, clearly structured and up-to-date on our website at www.schunk.com

- List of contact persons
- Online product search based on product descriptions
- Product news and trends
- Data sheets
- Order forms for easy and convenient ordering
- Free download area for pages from our product catalogs and technical data, for software and calculation programs for your gripping and rotary modules
- Free 2-D/3-D CAD design models, provided in a wide range of different CAD formats – for easy integration into your design!

Subsidiaries

Germany – Head Office
SCHUNK GmbH & Co. KG
Spann- und Greiftechnik
Bahnhofstr. 106 - 134
74348 Lauffen/Neckar
Tel. +49-7133-103-0
Fax +49-7133-103-2399
info@de.schunk.com
www.schunk.com

Austria
SCHUNK Intec GmbH
Friedrich-Schunk-Straße 1
4511 Allhaming
Tel. +43-7227 223 99-0
Fax +43-7227 210 99
info@at.schunk.com
www.at.schunk.com

Belgium, Luxembourg
SCHUNK Intec N.V./S.A.
Industrielaan 4 | Zuid III
9320 Aalst-Erembodegem
Tel. +32-53-853504
Fax +32-53-836351
info@be.schunk.com
www.be.schunk.com

Brazil
SCHUNK Intec-BR
Av. Santos Dumont, 733
BR 09015-330 Santo André – SP
Tel. +55-11-4468-6888
Fax +55-11-4468-6883
info@br.schunk.com
www.schunk.com

Canada
SCHUNK Intec Corp.
370 Britannia Road E, Units 3
Mississauga, ON L4Z 1X9
Tel. +1-905-712-2200
Fax +1-905-712-2210
info@ca.schunk.com
www.ca.schunk.com

China
SCHUNK Intec Precision Machinery Trading (Shanghai) Co., Ltd.
Xinzhuang Industrial Park,
1F, Building 1, No. 420 Chundong Road,
Minhang District
Shanghai 201108
Tel. +86-21-54420007
Fax +86-21-54420067
info@cn.schunk.com
www.cn.schunk.com

Czech Republic
SCHUNK Intec s.r.o.
Tuřanka 115 | CZ 627 00 Brno
Tel. +420-513 036 213
Fax +420-513 036 219
info@cz.schunk.com
www.cz.schunk.com

Denmark
SCHUNK Intec A/S
c/o SCHUNK Intec AB
Morabergsvägen 28
152 42 Södertälje Sweden
Tel. +45-43601339
Fax +45-43601492
info@dk.schunk.com
www.dk.schunk.com

Finland
SCHUNK Intec Oy
Hatanpään valtatie 34 A/B
33100 Tampere
Tel. +358-9-23-193861
Fax +358-9-23-193862
info@fi.schunk.com
www.fi.schunk.com

France
SCHUNK Intec SARL
Parc d'Activités des Trois Noyers
15, Avenue James de Rothschild
Ferrières-en-Brie
77614 Marne-la-Vallée, Cedex 3
Tel. +33-1-64663824
Fax +33-1-64663823
info@fr.schunk.com
www.fr.schunk.com

Great Britain, Ireland
SCHUNK Intec Ltd.
Cromwell Business Centre
10 Howard Way
Interchange Park
Newport Pagnell MK16 9QS
Tel. +44-1908-611127
Fax +44-1908-615525
info@gb.schunk.com
www.gb.schunk.com

Hungary
SCHUNK Intec Kft.
Széchenyi út. 70. | 3530 Miskolc
Tel. +36-46-50900-7
Fax +36-46-50900-6
info@hu.schunk.com
www.hu.schunk.com

India
SCHUNK Intec India Private Ltd.
80 B, Yeshwanthpur, Industrial Suburbs
Bangalore 560022
Tel. +91-80-40538999
Fax +91-80-40538998
info@in.schunk.com
www.in.schunk.com

Indonesia
Trade Representative Office of
SCHUNK Intec Pte. Ltd.
JL Boulevard Utama BSD
Foresta Business Loft 1 Blok C no. 16
Tangerang, 15339
Tel. +6221-3003-2993
Fax +6221-3003-2995
info@id.schunk.com
www.schunk.com

Italy
SCHUNK Intec S.r.l.
Via Barozzo | 22075 Lurate Caccivio (CO)
Tel. +39-031-4951311
Fax +39-031-4951301
info@it.schunk.com
www.it.schunk.com

Japan
SCHUNK Intec K.K.
45-28 3-Chome Sanno
Ohta-Ku Tokyo 143-0023
Tel. +81-3-37743731
Fax +81-3-37766500
info@jp.schunk.com
www.jp.schunk.com

Mexico
SCHUNK Intec S.A. de C.V.
Calle Pirineos # 513 Nave 6
Zona Industrial Benito Juárez
Querétaro, Qro. 76120
Tel. +52-442-211-7800
Fax +52-442-211-7829
info@mx.schunk.com
www.mx.schunk.com

Netherlands
SCHUNK Intec B.V.
Speldenmakerstraat 3d
5232 BH 's-Hertogenbosch
Tel. +31-73-6441779
Fax +31-73-6448025
info@nl.schunk.com
www.nl.schunk.com

Norway
SCHUNK Intec AS
Hvervenmoveien 45 | 3511 Hønefoss
Tel. +47-210-33106
Fax +47-210-33107
info@no.schunk.com
www.no.schunk.com

Poland
SCHUNK Intec Sp.z o.o.
ul. Puławska 40A
05-500 Piaseczno
Tel. +48-22-7262500
Fax +48-22-7262525
info@pl.schunk.com
www.pl.schunk.com

Russia
SCHUNK Intec 000
ul. Beloostrovskaya, 17, korp. 2, lit. A
St. Petersburg, 197342
Tel. +7-812-326-78-35
Fax +7-812-326-78-38
info@ru.schunk.com
www.ru.schunk.com

Singapore
SCHUNK Intec Pte. Ltd.
25 International Business Park
#03-51/52 German Centre
Singapore 609916
Tel. +65-6240-6851
Fax +65-6240-6852
info@sg.schunk.com
www.sg.schunk.com

Slovakia
SCHUNK Intec s.r.o.
Levická 7 | SK-949 01 Nitra
Tel. +421-37-3260610
Fax +421-37-3260699
info@sk.schunk.com
www.sk.schunk.com

South Korea
SCHUNK Intec Korea Ltd
#1207 ACE HIGH-END Tower 11th,
361 Simin-daero, Dongan-gu,
Anyang-si, Geonggido, 14057, Korea
Tel. +82-31-382-6141
Fax +82-31-382-6142
info@kr.schunk.com
www.kr.schunk.com

Spain, Portugal
SCHUNK Intec S.L.U.
Avda. Ernest Lluch, 32
TCM 3-6.01, ES-08302 Mataró (Barcelona)
Tel. +34-937 556 020
Fax +34-937 908 692
info@es.schunk.com
www.es.schunk.com

Sweden
SCHUNK Intec AB
Morabergsvägen 28
152 42 Södertälje
Tel. +46-8 554 421 00
Fax +46-8 554 421 01
info@se.schunk.com
www.se.schunk.com

Switzerland, Liechtenstein
SCHUNK Intec AG
Im Ifang 12 | 8307 Effretikon
Tel. +41-52-35431-31
Fax +41-52-35431-30
info@ch.schunk.com
www.ch.schunk.com

Turkey
SCHUNK Intec Bağlama Sistemleri ve Otomasyon San. ve Tic. Ltd. Şti.
Küçükyalı Iş Merkezi, Girne Mahallesi
Irmak Sokak, A Blok, No: 9
34852 Maltepe | Istanbul
Tel. +90-216-366-2111
Fax +90-216-366-2277
info@tr.schunk.com
www.tr.schunk.com

USA
SCHUNK Intec Inc.
211 Kitty Hawk Drive
Morrisville, NC 27560
Tel. +1-919-572-2705
Fax +1-919-572-2818
info@us.schunk.com
www.us.schunk.com

01/2016 © 2016 SCHUNK GmbH & Co. KG

Australia
Romheld Automation PTY. LTD.
Unit 30 | 115 Woodpark Road
Smithfield NSW 2164
Tel. +61-2-97211799
Fax +61-2-97211766
sales@romheld.com.au
www.romheld.com.au

Chile
Comercial Araneda y CIA. LTDA.
Quinta Normal
Vargas Fontecilla # 4550 | Santiago
Tel. +56-2-7248123
Fax +56-2-7102036
caraneda@rotar.cl | www.rotar.cl

Colombia
Cav -
Control y Automatización Virtual Ltda.
43 Oficina 101 Avenida Experanza N. 72B
Bogotá D.C.
Tel. +57-1-6608719
Fax +57-1-4109846
info@cavingenieros.com
www.cavingenieros.com

MIKRA CAD CAM CAE, LTDA
AC-3 # 31D-87, Bogotá
Tel. +571-201-6379

Costa Rica
RECTIFICACION ALAJUELENSE, S.A.
100m al Oeste y 75m al Sur del
Cementerio Central de Alajuela, Alajuela
Tel. +506-2430-5111

Croatia
Bibus Zagreb d.o.o.
Anina 91 | 10000 Zagreb
Tel. +385-138-18004
Fax +385-138-18005
info@bibus.hr | www.bibus.hr

Okret d.o.o.
Majurina 16 | 21215 Kastel Luksic
Tel. +385-21-228449
Fax +385-21-228464
okret@okret.hr

Ecuador
ELIMED CIA. LTDA.
Calle El Progreso OE1-111 y Manglaralto
Quito
Tel. +59-39-7784740

Estonia
DV-Tools OÜ
Peterburi tee 34/4 | 11415, Tallinn
Mobile Phone +372-56-655954
Fax +372-6030508
info@dv-tools.ee

Greece
Georg Gousoulis Co. O.E.
27, Riga Fereou Str.
14452 Metamorfosi-Athens
Tel. +30-210-2846771
Fax +30-210-2824568
mail@gousoulis.gr | www.gousoulis.gr

Iceland
Formula 1 ehf
Breidamörk 25 | P.O. Box 1 61
810 Hveragerdi
Tel. +354-5172200 | Fax +354-5172201
formula1@formula1.is

Indonesia
PT. Metaltech Indonesia
Jl. Gatot Subroto Km 8 | Tangerang 15136
Tel. +6221-55657435
Fax +6221-5918553
info@metaltechindonesia.com
www.metaltechindonesia.com

Iran
Iran Int. Procurement of Industries Co.
(I.I.P.I.)
No. 10, First alley, Golshan St.,
Khoramshahr Ave. | Tehran, 1554814771
Tel. +98-21-88750965
Fax +98-21-88750966
info@iipico.com

Israel
Ilan and Gavish Automation Service Ltd.
26, Shenkar St. | Qiryat-Arie 49513
P.O. Box 10118 | Petach-Tikva 49001
Tel. +972-3-9221824
Fax +972-3-9240761
nava@ilan-gavish.com
www.ilan-gavish.co.il

M. K. Sales
Arimon 41 St. | Mosave Gealya 76885
Tel. +972-52-8283391
Fax +972-8-9366026
moti@mk-sales.com
www.mk-sales.com

Latvia
Sia Instro
Lacplesa 87 | Riga, 1011
Tel. +371-67-288546
Fax +371-67-287787
maris@instro.lv | www.instro.lv

Malaysia
Precisetech Sdn. Bhd
Plant 1, 15 Lorong Perusahaan Maju 11
13600 Perai | Prai Penang
Tel. +604-5080288
Fax +604-5080988
sales@precisetech.com.my
www.precisetech.com.my

SK-TEC
Automation & Engineering Sdn. Bhd
No. 54-A, Jalan PU7/3,
Taman Puchong Utama
47100 Puchong
Selangor Darul Ehsan
Tel. +603-8060-8771
Fax +603-8060-8772
jeffery.koo@sk-tec.com.my
www.sk-tec.com.my

Peru
ANDES TECHNOLOGY S.A.C.
Avenida Flora Tristan 765
Lima
Tel. +51-1-3487611

MAQUINAS CNC, S.A.C.
Los Jazmines #143, Lima
Tel. +51-1-2750649

Philippines
Bon Industrial Sales
35 Macopa St. | Sta. Mesa Heights
Quezon City
Tel. +63-2-7342740
Fax +63-2-7124771
bonind@skyinet.net

Romania
S.C. Inmaacro S.R.L.
Industrial Machines and Accessories Romania
Avram Iancu Nr. 86
505600 Sacele-Brasov
Tel. +40-368-443500
Fax +40-368-443501
info@inmaacro.com
www.inmaacro.com

Saudi Arabia
Alruqee Machine Tools Co. Ltd.
Head Office
P.O. Box 36 57 | Alkhobar 31952
Tel. +966-3-8470449
Fax +966-3-8474992
mailbox2@alruqee.com
www.alruqee.net

Singapore
BALLUFF ASIA PTE LTD
18 Sin Ming Lane
#06-41 Midview City
Singapore 573960
Tel. +65-625-24384
Fax +65-625-29060
balluff@balluff.com.sg
www.balluff.com.sg

Eureka Tools Pte Ltd.
194 Pandan Loop, # 04-10 Pantech,
Industrial Complex | Singapore 128383
Tel. +65-687-45781
Fax +65-687-45782
eureka@eureka.com.sg
www.eureka.com.sg

Slovenia
MB-Naklo Trgovsko Podjetje D.O.O.
Toma Zupana 16 | 04202 Naklo
Tel. +386-42-771700
Fax +386-42-771717
mb-naklo@mb-naklo.si
www.mb-naklo.si

South Africa
AGM Maschinenbau Pty. Ltd.
42 Sonneblom Road, East Village
Sunward Park 1459, Boksburg
Tel. +27-11-913-2525
Fax +27-11-913-2994
alfred@agm-machinery.com
www.agm-maschinenbau.co.za

South Korea
Mapal Hiteco Co., Ltd.
1NA-502, Shiwha Ind. Complex 1254-10,
Jungwang-dong, Shihung-city
Kyunggi-do, 429-450
Tel. +82-1661-0091
Fax +82-31-3190-861
hiteco@kornet.net | www.hiteco.co.kr

Taiwan
Accudyna Engineering Co., Ltd.
2 F, No. 885, Youn-Chun East 1st. Rd
40877 Taichung City
Tel. +886-4-23801788
Fax +886-4-23805511
sales@accudyna.com.tw
www.accudyna.com.tw

Yonchin Enterprises, Inc.
5F, No. 100, Hsing Der Rd.
San Chung City 241, Taiwan
Tel. +886-2-2278-9330
Fax +886-2-2278-9320
yon.chin@msa.hinet.net
www.yonchin.com

Thailand
BRAINWORKS CO., LTD.
1/161-162 Soi Watcharapol 2/7, Tharang
Bangkhen, Bangkok 10220
Tel. +66-2-0241470 to 1
Fax +66-2-0241472
chatchai@brainworks.co.th
www.brainworks.co.th

Ukraine
Center of Technical Support „Mem"LLC
Malysheva str., 11/25
Dnipropetrovsk 49026
Tel. | Fax. +38-056-378-4905
maxim.bayer@gmail.com
www.ctp-mem.com.ua

Plants

Germany

Lauffen/Neckar

SCHUNK GmbH & Co. KG | Spann- und Greiftechnik
Bahnhofstr. 106 – 134 | 74348 Lauffen/Neckar
Tel. +49-7133-103-0
Fax +49-7133-103-2399
info@de.schunk.com | www.schunk.com

Brackenheim-Hausen

SCHUNK GmbH & Co. KG | Spann- und Greiftechnik
Wilhelm-Maybach-Str. 3 | 74336 Brackenheim-Hausen
Technical Sales +49-7133-103-2503
Technical Support +49-7133-103-2696
Fax +49-7133-103-2189
automation@de.schunk.com | www.schunk.com

Huglfing

SCHUNK Montageautomation GmbH
Auwiese 16 | 82386 Huglfing
Member of SCHUNK Lauffen
Tel. +49-8802-9070-30
Fax +49-8802-9070-340
info@de.schunk.com | www.schunk.com

Mengen

H.-D. SCHUNK GmbH & Co. Spanntechnik KG
Lothringer Str. 23 | 88512 Mengen
Tel. +49-7572-7614-0
Fax +49-7572-7614-1039
futter@de.schunk.com | www.schunk.com

St. Georgen

SCHUNK Electronic Solutions GmbH
Am Tannwald 17 | 78112 St. Georgen
Tel. +49-7725-9166-0
Fax +49-7725-9166-5055
electronic-solutions@de.schunk.com | www.schunk.com

Your local technical consultant
www.schunk.com/services/ansprechpartner/aussendienst

International

Morrisville/North Carolina, USA

SCHUNK Intec Inc.
211 Kitty Hawk Drive | Morrisville, NC 27560
Tel. +1-919-572-2705
Fax +1-919-572-2818
info@us.schunk.com | www.us.schunk.com

Copyright
All text drawings and product illustrations are subject to copyright and are the property of SCHUNK GmbH & Co. KG
Technical Changes
The data and illustrations in this catalog are not binding and only provide an approximate description. We reserve the right to make changes to the product delivered compared with the data and illustrations in this catalog, e.g. in respect of technical data, design, fittings, material and external appearance.

Catalog Order

Copy, complete, fax to +49-7133-103-2779

Gripping Systems

☐ Complete Program Gripping Systems

☐ Grippers

☐ Rotary Modules

☐ Linear Modules

☐ Robot Accessories

☐ Product Overview

☐ Highlights New Products

☐ Product Overview Mechatronics

☐ Product Overview Linear Modules

☐ Product Overview Robot Accessories

Clamping Technology

☐ Complete Program Clamping Technology

☐ Toolholders

☐ Stationary Workholding

☐ Lathe Chucks

☐ Chuck Jaws

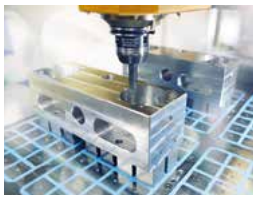

☐ Magnetic Clamping Technology

☐ Product Overview

☐ Hydraulic Expansion Technology Special Solutions

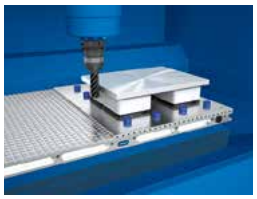

☐ Vacuum Clamping Technology

☐ Highlights New Products

Company | Name | Department

Street | ZIP | City

Tel. | Fax | E-Mail

Quality Management DQS ISO 9001:2008 Reg. No. 003496 QM08

Fax Order

Copy, complete, fax to +49-7133-103-2189

Company

Name

Department

Street

ZIP City

Tel. Fax

VAT No.

Order

Pos.	Quantity	Type	ID
1			
2			
3			
4			
5			
6			
7			
8			
9			
10			

The general terms of sales and conditions of SCHUNK GmbH & Co. KG apply.
www.schunk.com

Date Signature

04/2015 © 2015 SCHUNK GmbH & Co. KG

A class of its own.

The new SCHUNK Gripper PGN-plus-P of the Generation Permanent.

Now with permanent lubrication.

www.gb.schunk.com/pgn-plus-generation-permanent

9965536-7M-02/2016 © 2016 SCHUNK GmbH & Co. KG